VAS S.p.A.
PAPER MACHINERY

37026 SETTIMO DI PESCANTINA (VR)
Via Mirandola, 13 – ITALY
Tel.: (+39-045) 6700298
Fax: (+39-045) 6702511
E-mail: project@vas.it

UNWIND & WINDER

OPERATION and MAINTENANCE HANDBOOK 1

Type	:	*UNWIND & WINDER*
Serial number	:	*1725*
Year	:	*2000*

VAS S.p.A.
PAPER MACHINERY

CE DECLARATION OF CONFORMITY

(Directive 89/392 CE, enclosure II, part A)

Builder: V.A.S. S.p.A.

Address: via Mirandola, 13 – 37026 SETTIMO DI PESCANTINA (VR) – ITALY

Buyer: Georgia-Pacific, Inc.; 319 Allanburg RD. Thorold, Ontario, Canada L2V-5C3 (USA)

Conductor: Georgia-Pacific, Inc.; 319 Allanburg RD. Thorold, Ontario, Canada L2V-5C3 (USA)

We declare that the **Unwind and Winder – serial number 1725** as per technical specification n° 1725 dated 19th December, 1999 is conform to the Machine Directive (Directive 89/392 CE dated 14th June, 1989 and the next updating 91/368; 93/44 e 93/68) and to the national laws that *traipses it only to the goods listed in the contract.*

The machine is built to be assembled with other components, so the builder is not responsible about the problems that will occur for the assembly with elements may not conform to the Directive 89/392 CE.

Verona, 2nd, November 2000

V.A.S. S.p.A.
Ing. Valbusa Andrea

VAS S.p.A.
PAPER MACHINERY

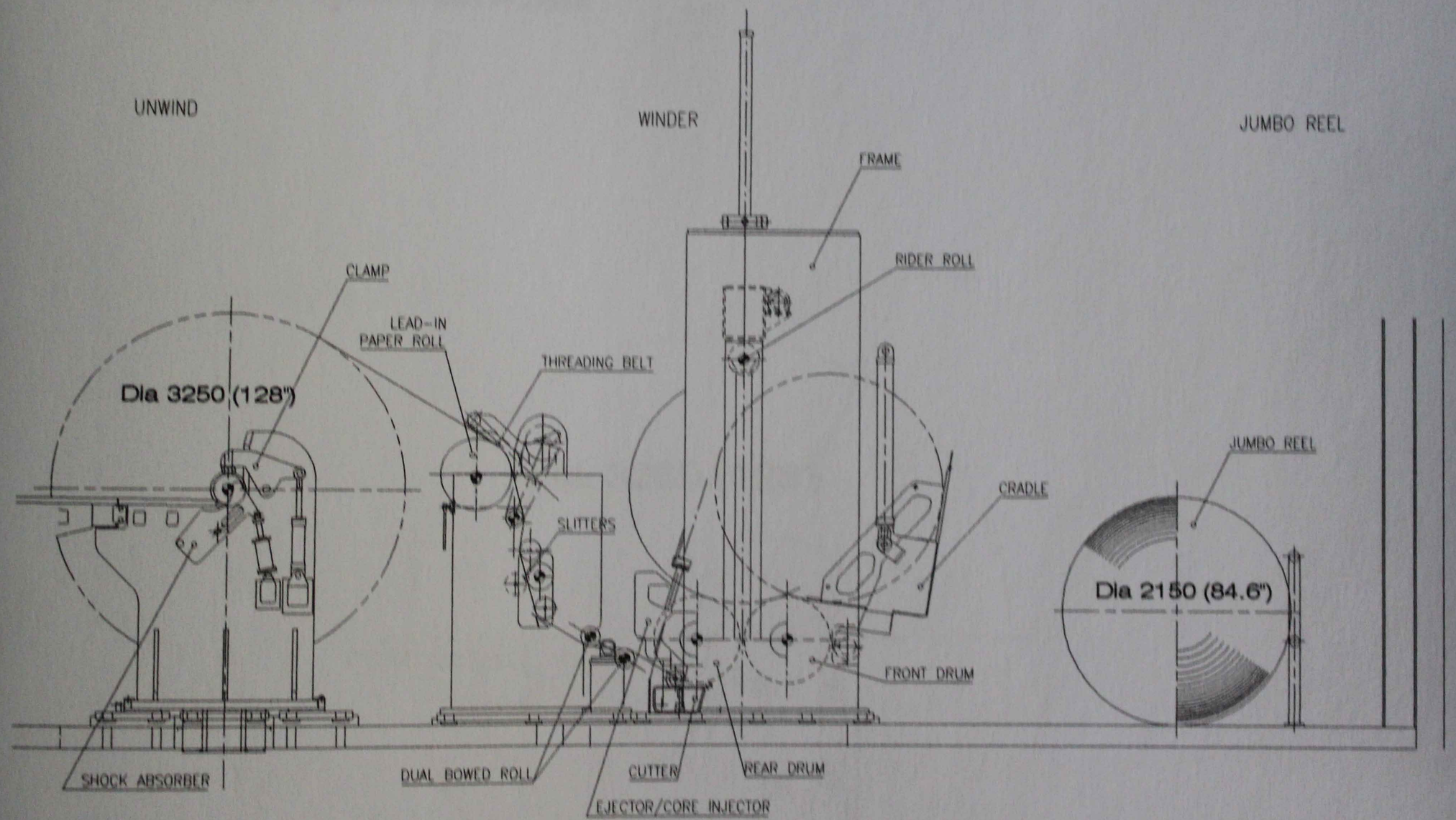

4.1 Reel spool unwind

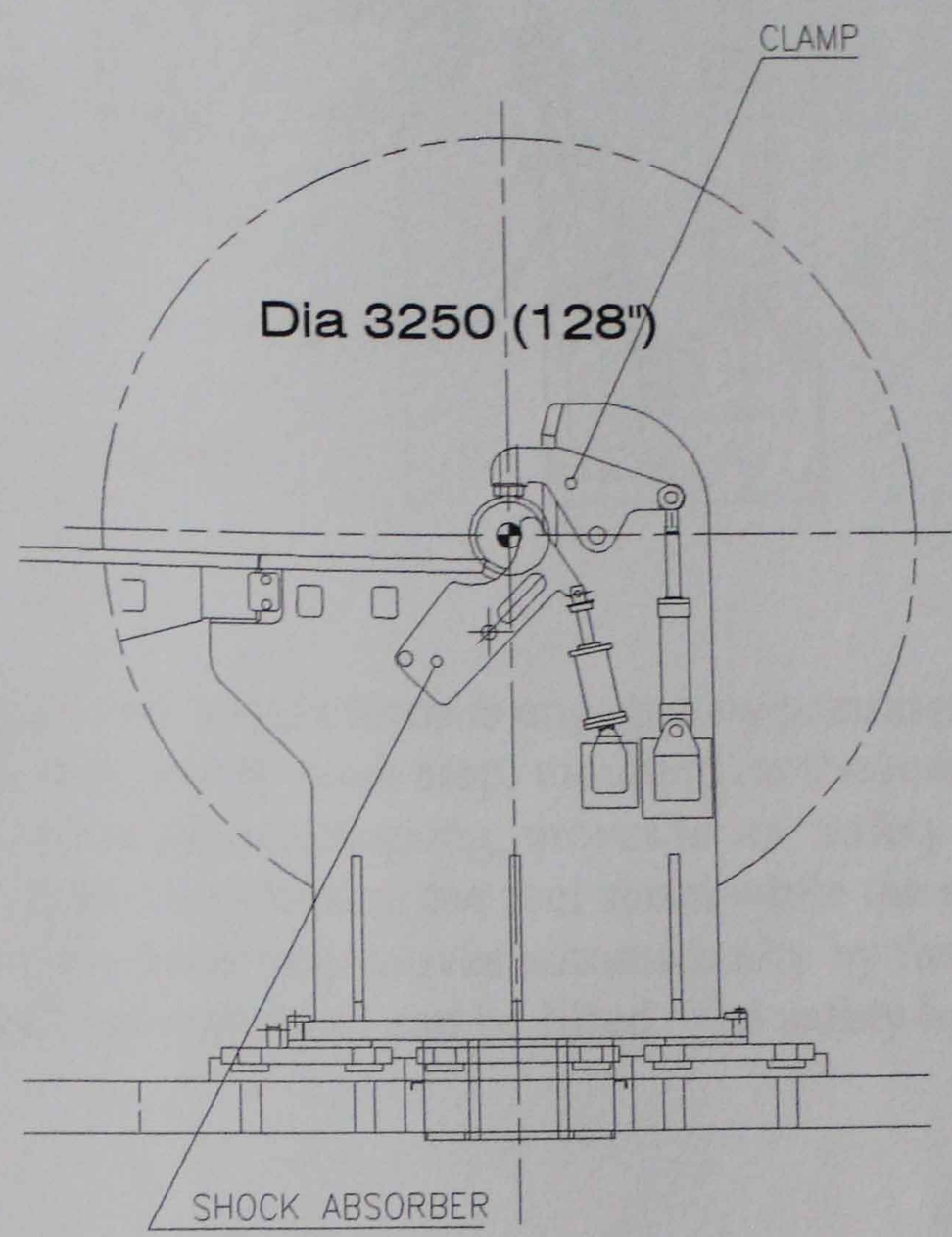

The unwind has a front and rear stand mounted on slide bases and connected with cross beam. A hydraulic cylinder, installed on rear side, moves laterally the both stand in a way to adjust the spool position of ± 50 mm / ± 2 inches (max. 75 mm/ 3 inches) from machine centre. The unwind centring adjustment is made at thread speed or stop, by using the **"UNWIND CENTERING left / right"** push button on the winder control console D115 (dwg. 114278).