DATE D/M/Y	DES'D	APP'D	DESCRIPTION	NO.	REV.

VARIANT DESCRIPTION	MATERIAL	NET WGT. KG	VAR.
STOCKER KW4		0.0	K1

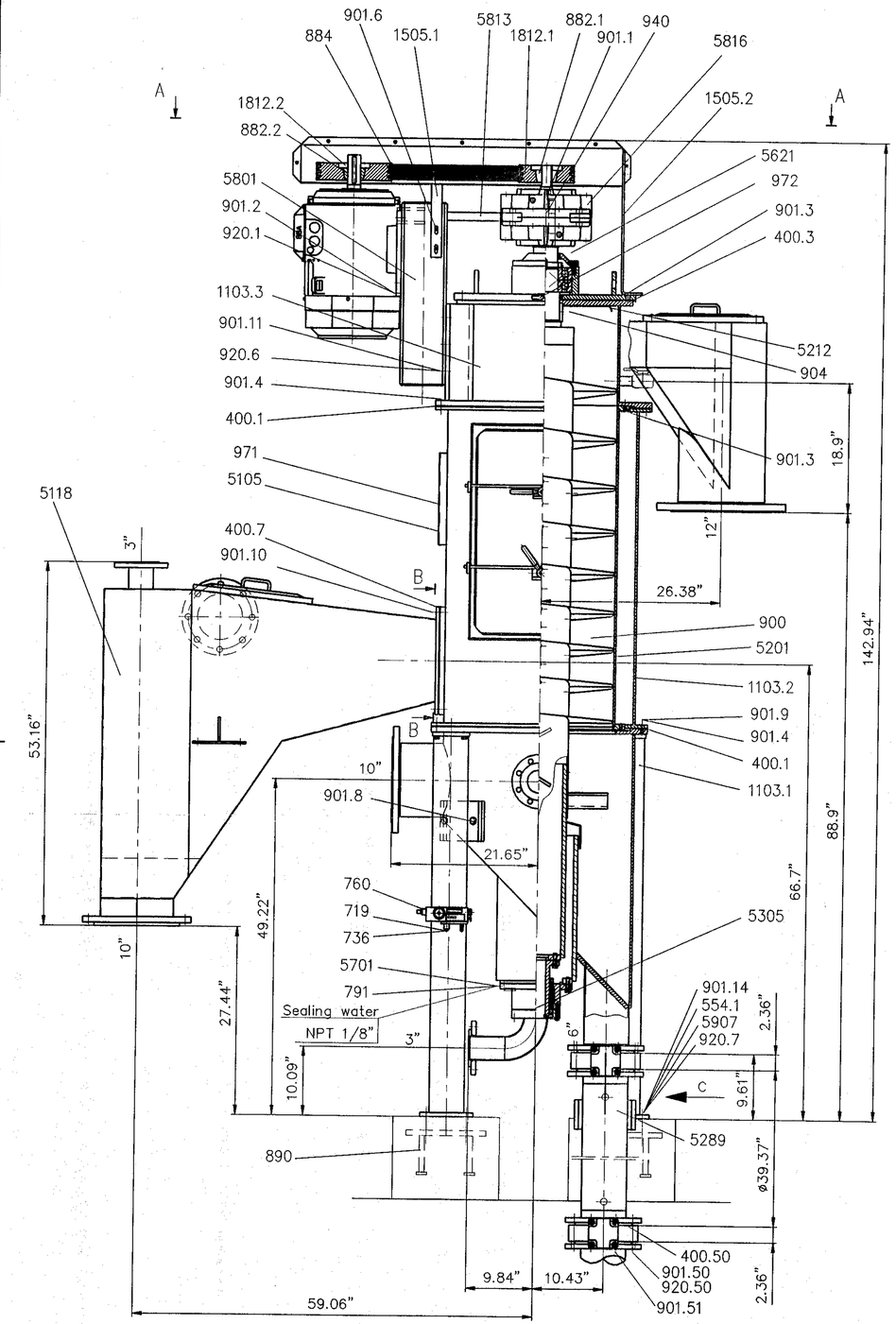

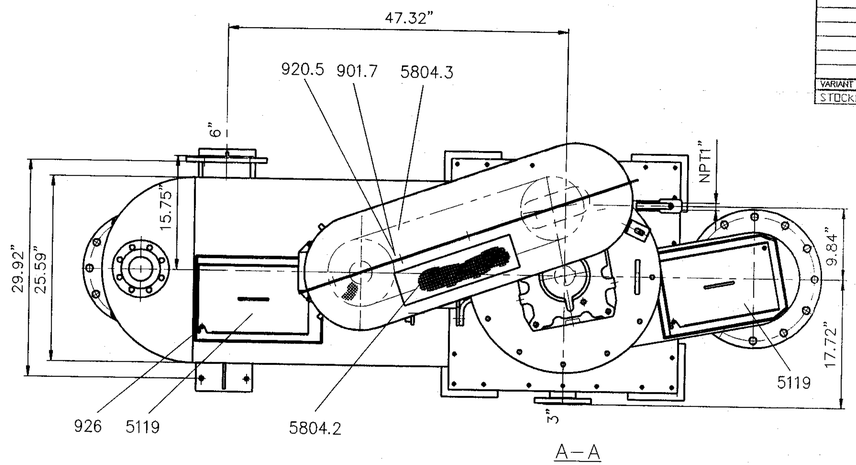

A–A

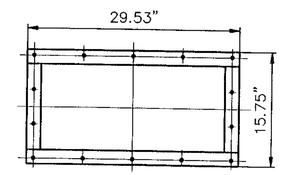

DIRECTION B

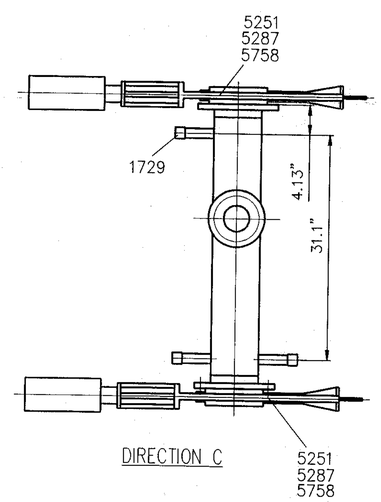

DIRECTION C

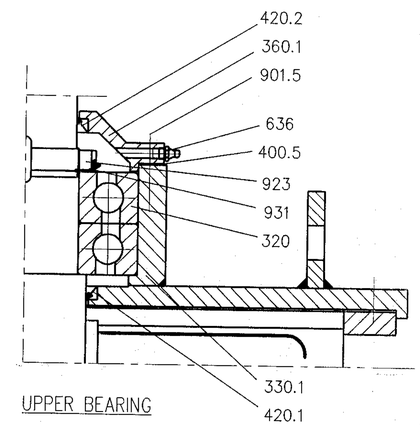

UPPER BEARING

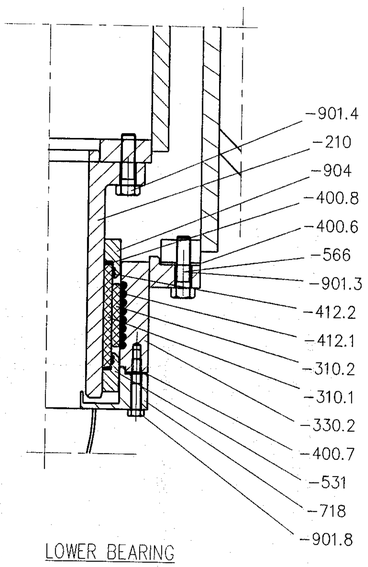

LOWER BEARING

GENERAL TOLERANCES		Nominal measure	>0,5 ≤6	>6 ≤30	>30 ≤120	>120 ≤400	>400 ≤1000	>1000 ≤2000	>2000 ≤4000	>4000 ≤8000	>8000 ≤12000	>12000 ≤18000	>18000 ≤20000
Welded constr.	Linear dim. EN 33920-1	Precision class	B	±1	±1	±2	±2	±3	±4	±6	±8	±10	±12	±14	±16
Machining	Linear dim. ISO 2768-1	Tolerance class	m	±0.1	±0.2	±0.3	±0.5	±0.8	±1.2	±2	±3	±4	±5	±6	–

Surface roughness	ISO 1302-Ra	– Machining ISO 2768-mK (Circular run-out tolerances only for dia < 500 mm)	
Welding symbols	ISO 2553	– Welded constr. EN 33920-BG	– Castings, machinemoulded ISO 8062 CT10
Tolerancing	ISO 8015	– Flame cutting < SFS 4072-B	– Castings, handmoulded ISO 8062 CT12
Geom. tolerances	ISO 1101	DIN 2310-B	– Forgings SFS 3507, DIN 7527

THIS DOCUMENT AND ANY INFORMATION HEREIN CONTAINED ARE THE PROPERTY OF AHLSTROM MACHINERY CORPORATION. THE UNAUTHORIZED COPYING BY USE OR DISCLOSURE TO PERSONS WHO ARE NOT ENTITLED TO RECEIPT OF SUCH DOCUMENT OR DISCLOSURE TO PERSONS WHO ARE LIKELY TO MISUSE THIS DOCUMENT OR INFORMATION IS PROHIBITED. ANY BREACH AGAINST THE ABOVE PROVISION IS LIABLE TO ENFORCEMENT BY LAW. DAMAGES AVAILABLE TO THOSE AGGRIEVED AND OTHER REMEDIES AVAILABLE BY LAW OR EQUITY.

AHLSTROM
AHLSTROM MACHINERY
Fiber Equipment
Karhula Finland

SAPPI FINE PAPER
ASSEMBLY DRAWING
STOCKER KW4

DESIGNED	DATE D/M/Y	MAIN REF. DWG.	TYPE
LAUKKMA	28.03.2000	SUK501289	
CHECKED		SCALE 1:10	PROJECT NO / PRODUCT CODE / SORT
APPROVED		DRAWING NO. FE100401	REV.