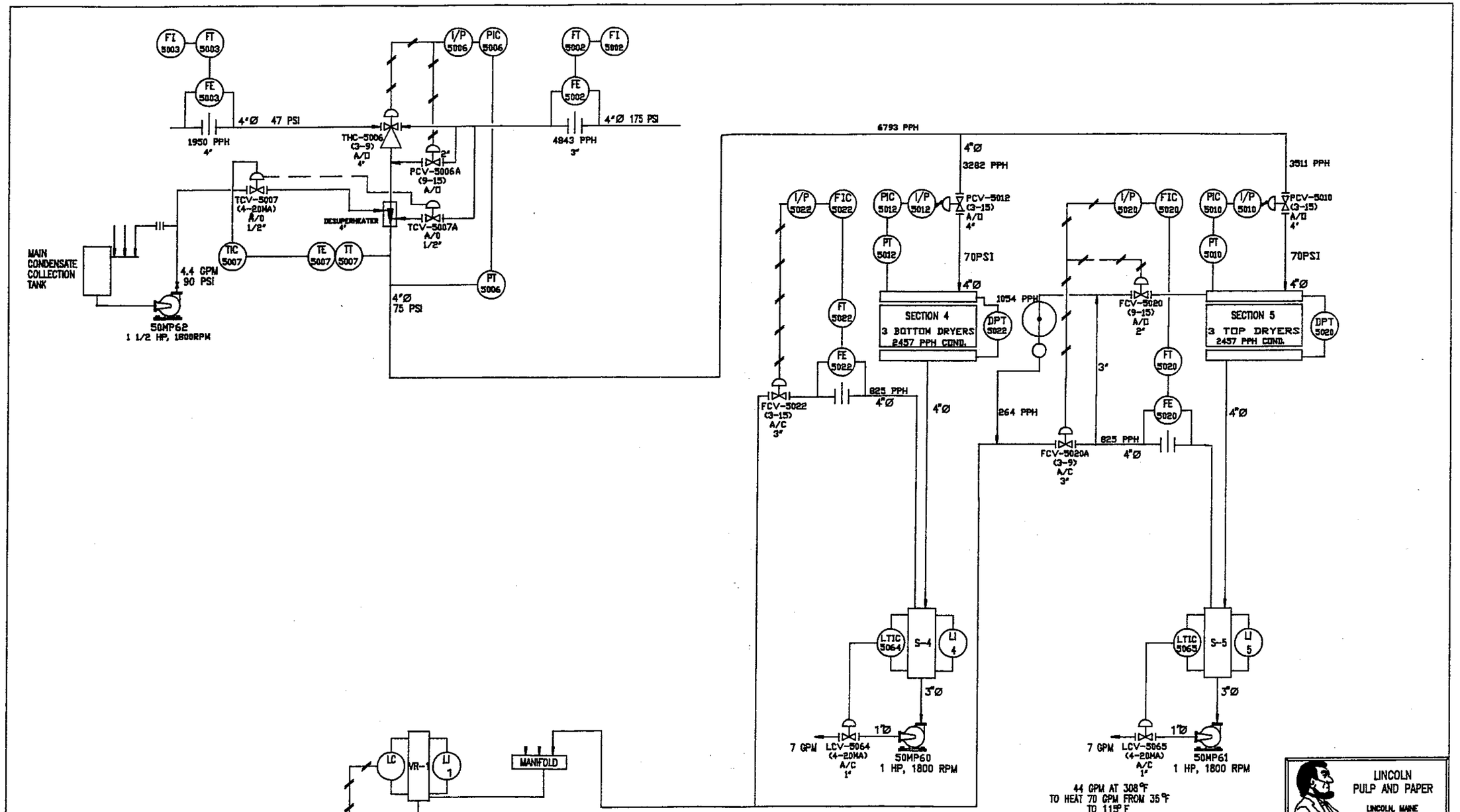

DWG NO.	REFERENCE DRAWINGS	NO.	REVISIONS	MADE BY / CKD. BY	DATE
6-26-92	PRELIMINARY ISSUE	0			
7-01-92	CHANGED PUMP EQUIPMENT NOS.	1			
7-28-92	ADDED DPT-5020/5022	2			