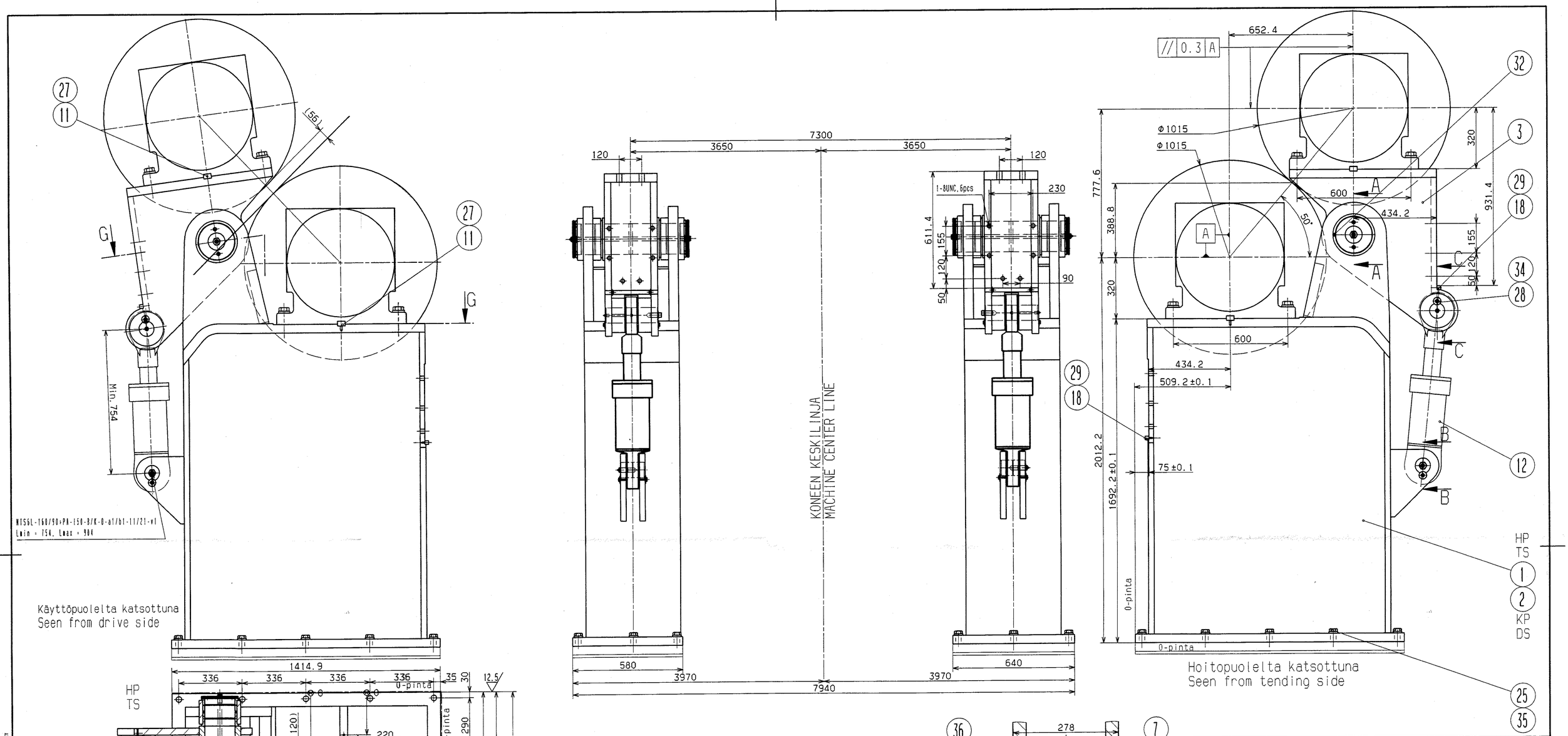

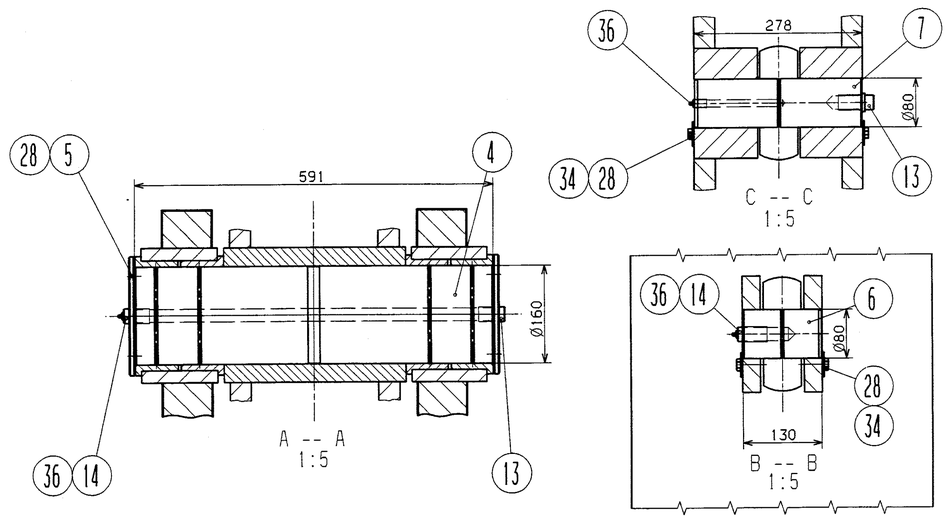

TIGHTENING TORQUES

Steel bolts and nuts
ANSI 18.2.1, ANSI B 18.3

Nominal size	8.8 Zne 1)		A4-80 2)		A4-70 2)	
	Nm	Ft-lbs	Nm	Ft-lbs	Nm	Ft-lbs
1/4 UNC	10	8	10	7		
5/16 UNC	23	17	22	15		
3/8 UNC	42	30	38	28		
1/2 UNC	100	73	89	65		
5/8 UNC	200	145	175	130		
3/4 UNC	350	260	315	230		
7/8 UNC	560	410	500	365		
1 UNC	825	610	730	540		
1 1/4 UNC	1640	1210			1210	895
1 1/2 UNC	2850	2100			1680	1240

1) Non-lubricated threads
2) Primarily Molykote 1000 and Molykote HSC Plus
Alternatively Chesterton 785, Hirange, Loctite 8155 (coefficient of friction smaller than 0.20)
CALIBRATED TORQUE WRENCHES!

KIRISTYSMOMENTIT

Teräsruuvit ja mutterit
ANSI 18.2.1, ANSI B 18.3

Kierre	8.8 Zne 1)		A4-80 2)		A4-70 2)	
	Nm	Ft-lbs	Nm	Ft-lbs	Nm	Ft-lbs
1/4 UNC	10	8	10	7		
5/16 UNC	23	17	22	15		
3/8 UNC	42	30	38	28		
1/2 UNC	100	73	89	65		
5/8 UNC	200	145	175	130		
3/4 UNC	350	260	315	230		
7/8 UNC	560	410	500	365		
1 UNC	825	610	730	540		
1 1/4 UNC	1640	1210			1210	895
1 1/2 UNC	2850	2100			1680	1240

1) kuiva
2) Ensisijaisesti Molykote 1000/ Molykote HSC Plus
Korvaavana esim. Chesterton 785, Loctite 8155
Hirange (kiitkakerroin aina pienempi kuin 0.20)
KALIBROITU KIRISTYSTYÖKALU

PART	DESCRIPTION	DIMENSIONS	MATERIAL	DRAWING	REQ'D	NOTES

GENERAL TOLERANCES, DIMENSIONS WITHOUT INDIVIDUAL TOLERANCE INDICATIONS:
MACHINING: ISO 2768-mK (SFS-EN 22768-1, SFS-EN 22768-2)
WELDING: DIN 8570-BE (DIN 8570 T1, DIN 8570 T3)
CASTING: ISO 8062-CT 11 (SFS-ISO 8062)
WELDING QUALITY LEVEL C (SFS-EN 25817, ISO 5817)

GPAS61

642-020-010

VALMET

PROJECTION | SCALE 1:10(1:5) | WEIGHT Kg 5600

PRODUCT SymSizer
FRAMES ASSEMBLY
Rungot koottuna
REF RAU1501052A
SUPERS.
WORK 603540
FILE
CATIA

DESIGN Piirainen (EM) DATE 98-08-12
CHKD Kautto (EM) DATE 98-08-12
APPD DATE

DRAWING ID RAU1501567.00
SHEET

DATE	NAME	CHKD	REVISION	CHG/KEY

THE INFORMATION CONTAINED HEREIN IS PROPRIETARY TO VALMET AND IS NOT TO BE REPRODUCED OR USED WITHOUT THE EXPRESS WRITTEN PERMISSION OF VALMET

VALMET CERTIFIED 19.10.1998 DATE