DATE D/M/Y	DES'D	APP'D	DESCRIPTION	NO.	REV.
05.04.00	SUORTSI		VALVES ROTATED 180°	1	A

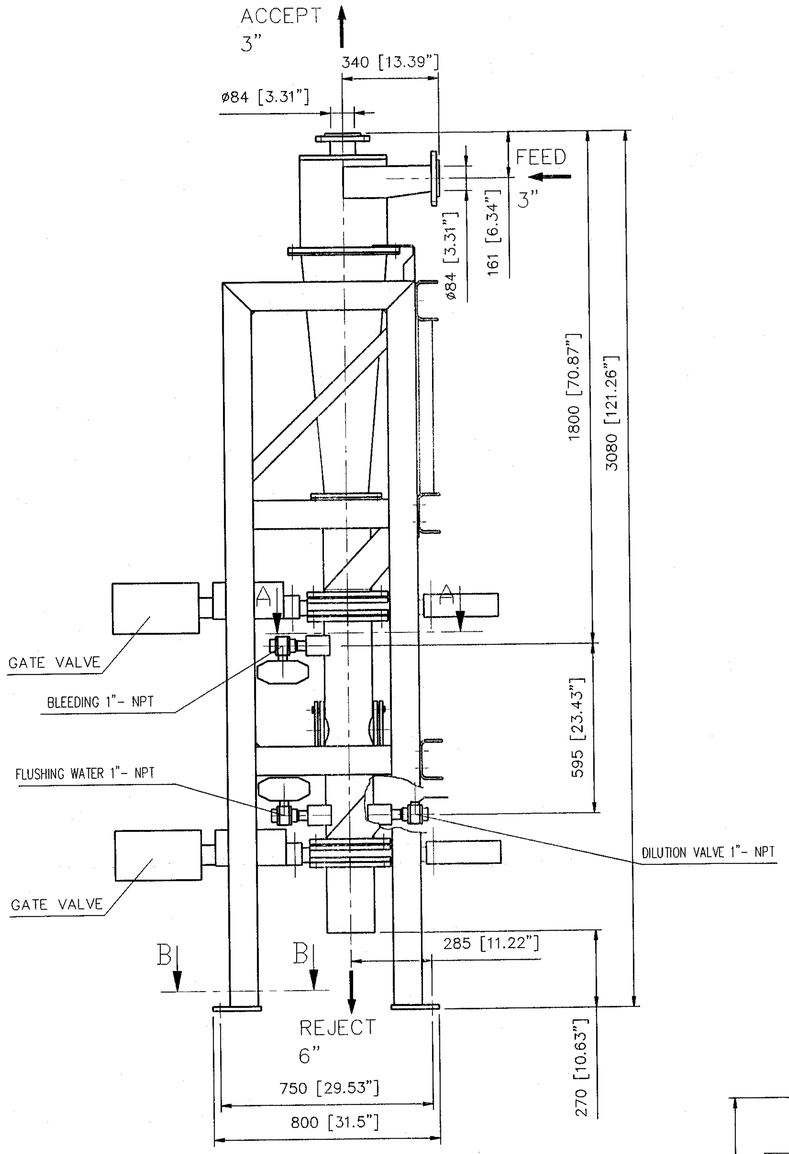

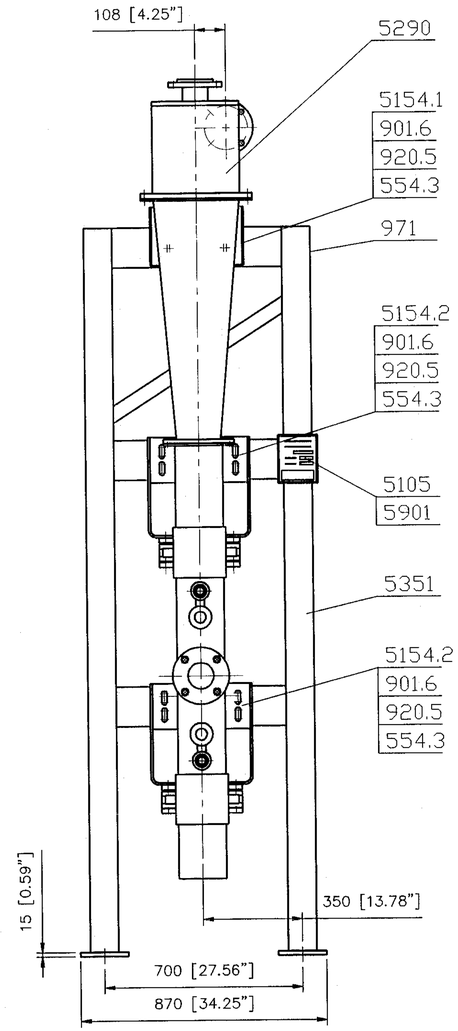

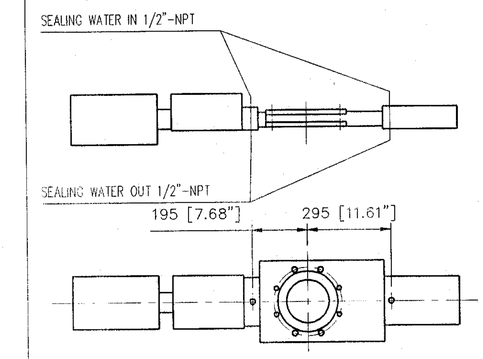

EXTRA SEALING WATER CONNECTIONS ON DOUBLE-BOX GATE VALVE

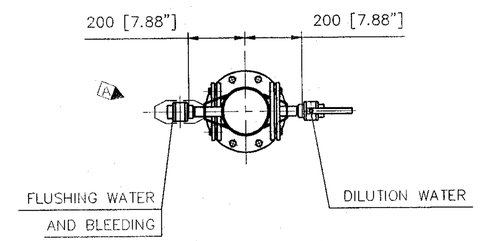

DIRECTION A – A

FOUNDATION

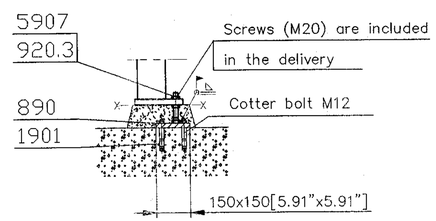

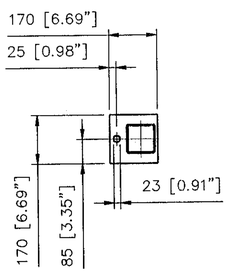

DIRECTION B – B

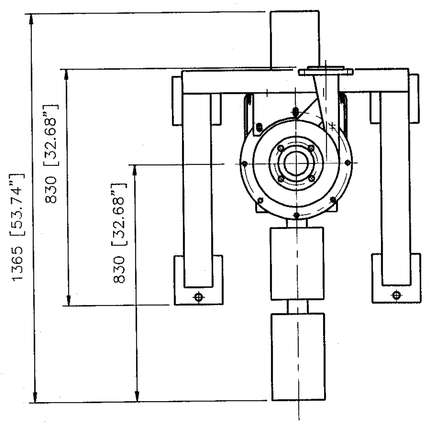

X---X DELIVERY LIMIT
FLANGE STANDARD TO FIT ANSI B16.5 #150
THREADED PARTS ACC. NPT
OPERATION WEIGHT: 495 Kg 1091 lbs
EMPTY WEIGHT: 415 Kg 1091 lbs
DYN. LOAD FACTOR 1,1

CERTIFIED

Modified 05.04.2000

GENERAL TOLERANCES		Nominal measure	>0,5 ≤6	>6 ≤30	>30 ≤120	>120 ≤400	>400 ≤1000	>1000 ≤2000	>2000 ≤4000	>4000 ≤8000	>8000 ≤12000	>12000 ≤16000	>16000 ≤20000	>20000
Welded constr.	Linear dim. ISO 13920	Precision class B	±1	±1	±2	±2	±3	±4	±6	±8	±10	±12	±14	±16
Machining	Linear dim. ISO 2768-1	Tolerance class m	±0.1	±0.2	±0.3	±0.5	±0.8	±1.2	±2	±3	±4	±5	±6	–

Surface roughness	ISO 1302-Ra	– Machining	ISO 2768-mK (Circular run-out tolerances only for dia ≤ 500 mm)
Welding symbols	ISO 2553	– Welded constr.	ISO 13920-BG – Castings, machinemoulded ISO 8062 CT10
Tolerancing	ISO 8015	– Flame cutting	ISO 9013-IIB – Castings, handmoulded ISO 8062 CT12
Geom. tolerances	ISO 1101		ISO 9013-IIG – Forgings SFS 3507, DIN 7527

THIS DOCUMENT AND ANY INFORMATION HEREIN CONTAINED ARE THE PROPERTY OF AHLSTROM MACHINERY CORPORATION. THE UNAUTHORIZED COPYING BY, USE BY, OR DISCLOSURE TO PERSONS WHO ARE NOT ENTITLED TO RECEIPT OF SUCH DISCLOSURE, OR DISCLOSURE TO PERSONS WHO ARE LIKELY TO MISUSE THIS DOCUMENT OR INFORMATION, IS PROHIBITED. ANY BREACH AGAINST THE ABOVE WILL BE PROSECUTED. ALL RIGHTS ARE RESERVED WITH COPYRIGHT LAWS. DAMAGES, INJUNCTIONS AND OTHER REMEDIES AVAILABLE BY LAW OR EQUITY.

AHLSTROM
AHLSTROM MACHINERY
Fiber Equipment
Karhula Finland

SAPPI FINEPAPER, USA
ASSEMBLY DRAWING
Size 1, GATE, ANSI
AhlCleaner RB 300EI HD

DESIGNED	DATE D/M/Y	MAIN REF. DWG.	TYPE
SUORTSI	28.02.2000		
CHECKED		SCALE 1:10	PROJECT NO / PRODUCT CODE / SORT
APPROVED		DRAWING NO. FE100355	REV. A

05.04.00 14:31 FE100355.DWG