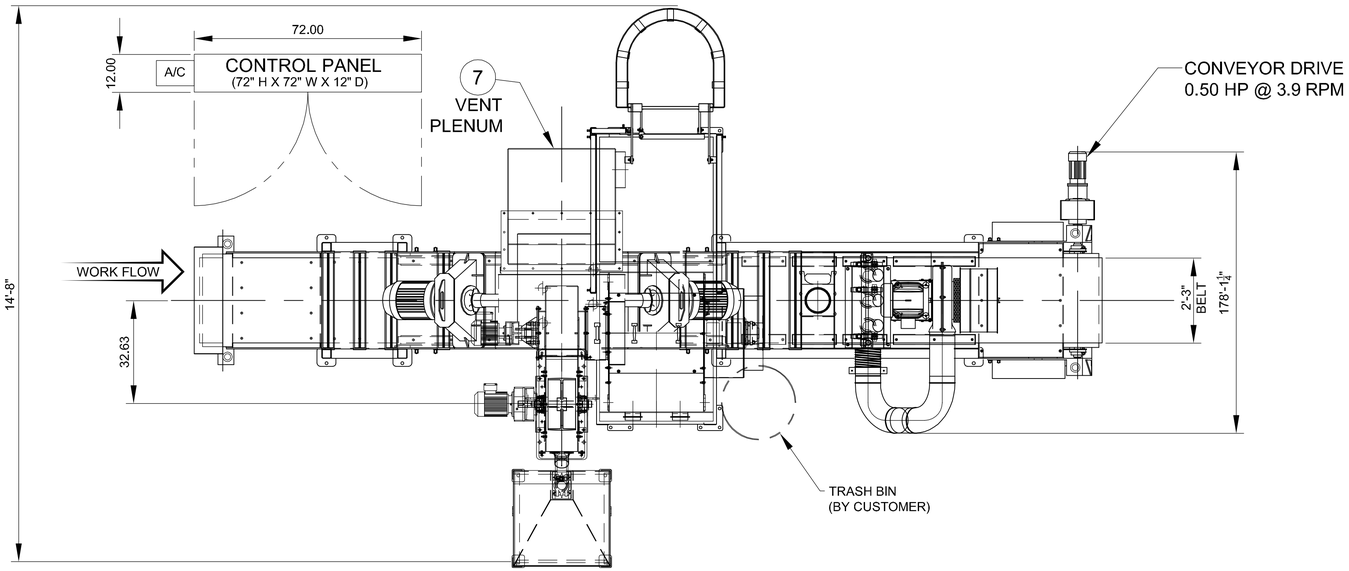

CUSTOMER APPROVAL of 601207

Signed drawing(s) is a statement that the dimensions, design and application have been reviewed and are approved for fabrication.

- ☐ Approved as submitted
- ☐ Approved as noted
- ☐ Disapproved - Please resubmit

NOTE: MANUFACTURE OF EQUIPMENT WILL BE SCHEDULED AFTER RECEIPT OF APPROVED DRAWINGS.

CUSTOMER MUST APPROVE THE FOLLOWING INFORMATION:

OVERALL DIMENSIONS _____ D/C LOCATION _____

WORK FLOW _____ CP LOCATION _____

NOTE: WHEELABRATOR WILL NOT BE RESPONSIBLE FOR BACK CHARGES RELATED TO THE ABOVE ITEMS WHEN PROVIDED WITH INCORRECT INFORMATION.

AUTHORIZED SIGNATURE:

_____

GENERAL DESIGN DATA

Project Number:	601207
Utilities:	
Electric Power (Full Load Amps):	xxxx AMPS xxx VAC xx hz
Compressed Air (Blast Machine):	5 CFM
Compressed Air (D/C):	20 CFM
Ventilation:	5100 CFM
Gas:	N/A
Water:	N/A.
Media Charge:	5 ton

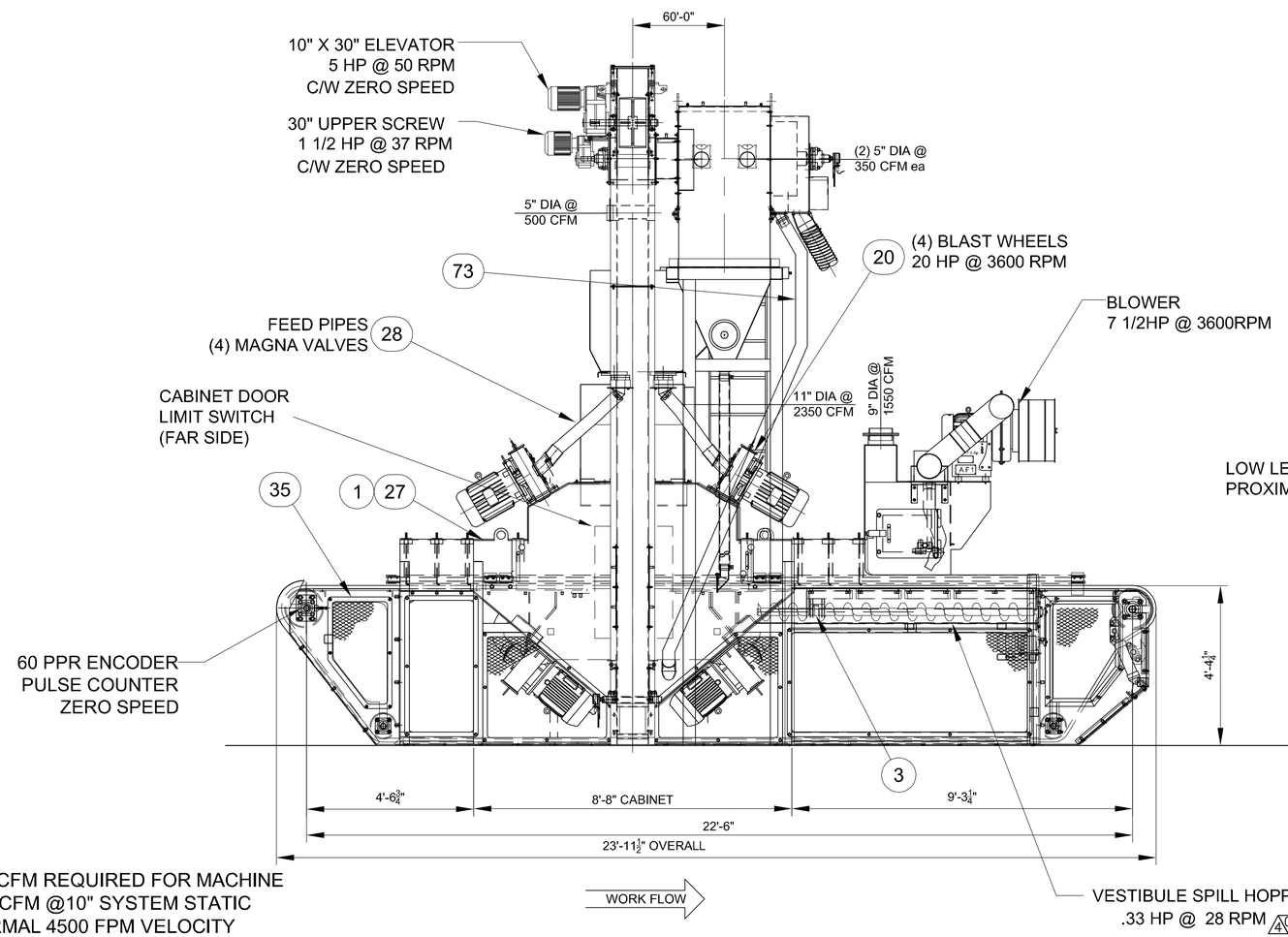

TOTAL CFM REQUIRED FOR MACHINE
IS 5100 CFM @10" SYSTEM STATIC
AT NORMAL 4500 FPM VELOCITY
ABRASIVE CHARGE: 5 TON

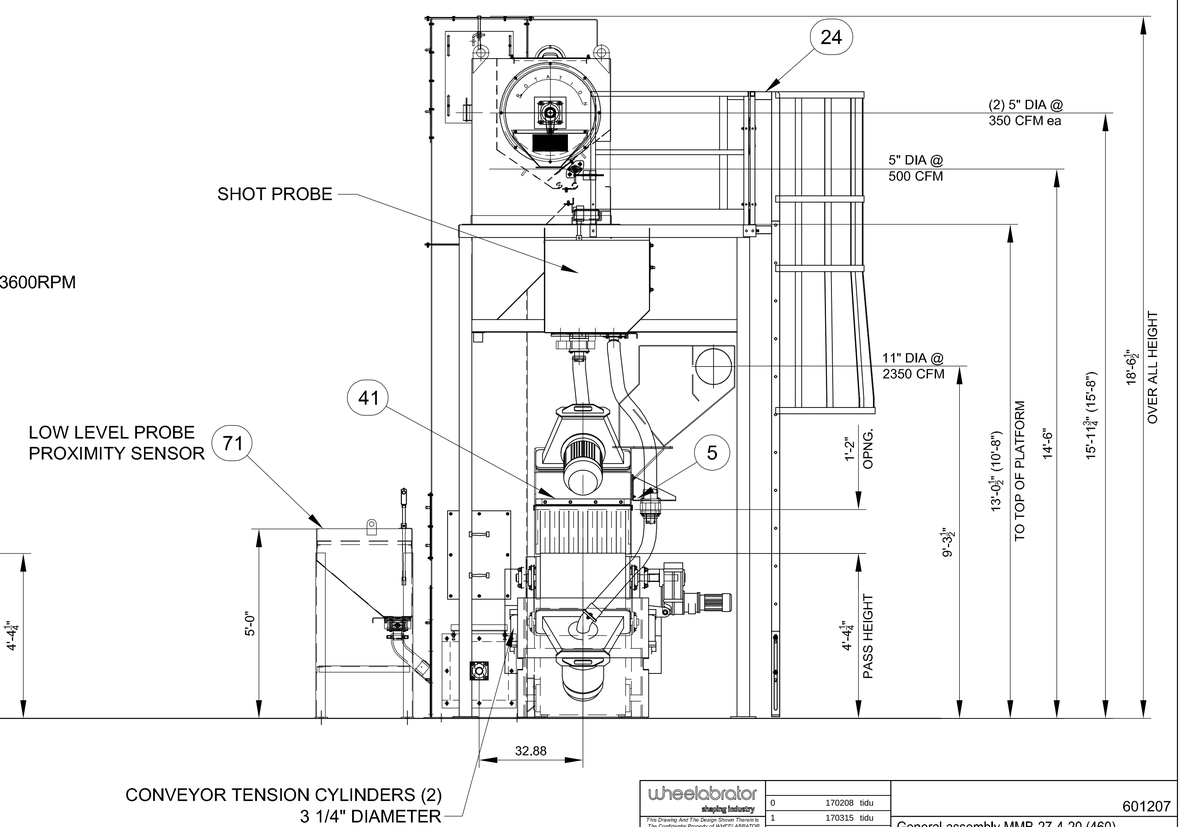

wheelabrator shaping industry	0 170208 tidu		601207
This Drawing And The Design Shown Thereon Is The Confidential Property of WHEELABRATOR And Use or Copies Thereof Cannot Be Made Without Written Consent. WHEELABRATOR is a Registered Trademark of WHEELABRATOR TECHNOLOGIES, INC.	1 170315 tidu		General assembly MMB-27-4-20 (460) MMB (NA)
	2 170320 tidu		
	3 170421 grst		
Size: D	Rev EC Date Sign.		
Scale: 1/2" = 1'-0"	Created: 170605 tidu	Drawing No. 11044635	Revision 4 / Sheet 1 of 2 / Minor rev. 0
Weight: 20394.945 lb	Checked:		
Material:	Approved: 170606 tidu		
	Wear/Spare part: Spare	Origin: 10651710	Replacement for: / Replaced by:
Dim:	Owned by: NA		
New Design:	Old Design:	Item No.: 11044635	IMPERIAL

BlueStar Managed Drawing

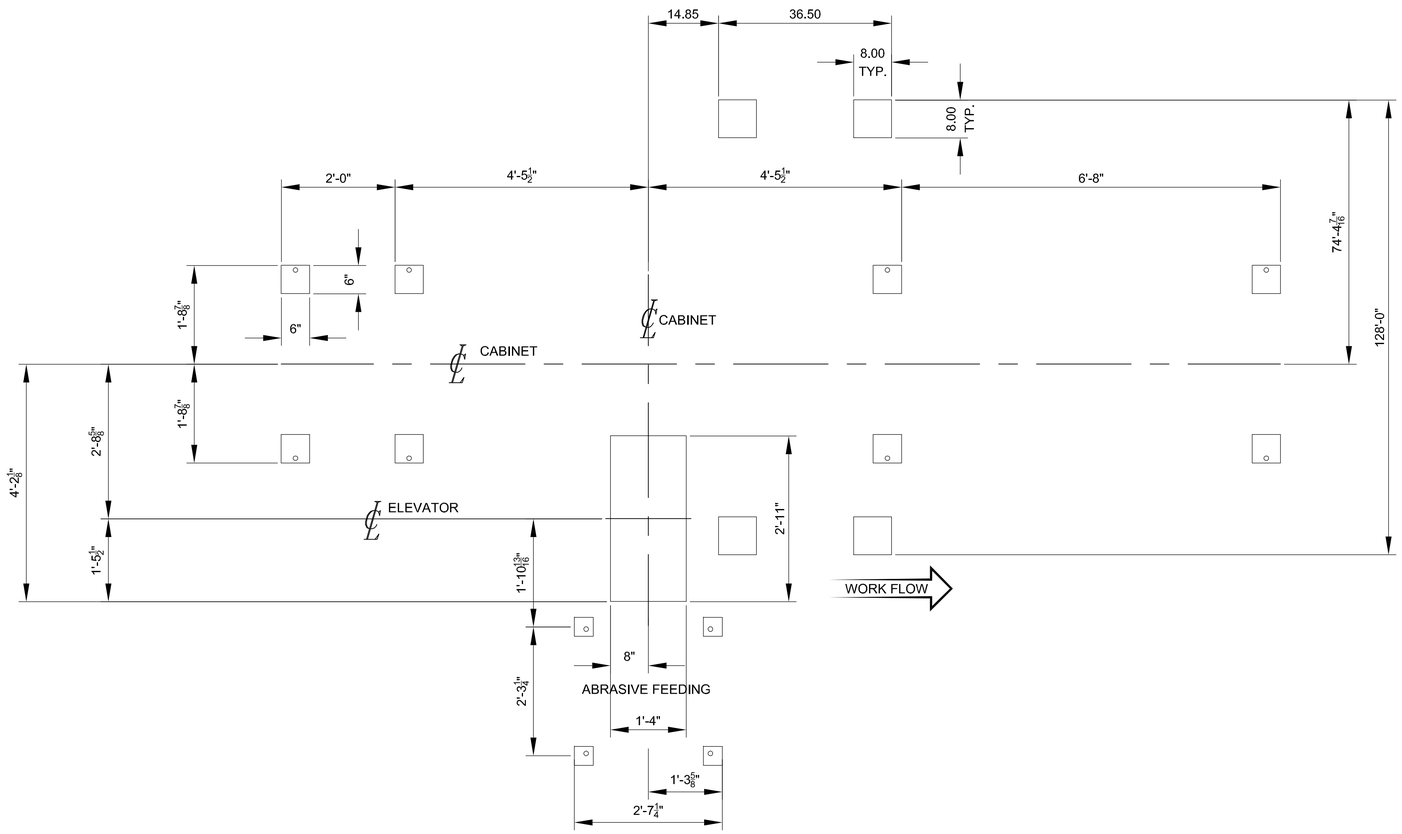

FOOT PRINT

TYPICAL INSTALLATION INSTRUCTIONS

1. REFER TO BOX THAT HOLDS CAPSULES. SELECT PROPER CARBIDE TIPPED DRILL BIT SIZE. DRILL HOLE TO RECOMMENDED EMBEDMENT DEPTH.

2. CLEAN ALL DUST FROM HOLE.

3. INSERT CAPSULE INTO DRILLED HOLE. DO NOT USE CAPSULE IF CRACKED OR DAMAGED.

4. ASSEMBLE TWO NUTS, WITH WASHER BETWEEN THEM, ONTO THE ANCHOR ROD AND TIGHTEN TOGETHER. PLACE PREASSEMBLED ANCHOR ROD INTO IMPACT SOCKET AND SOCKET ADAPTER. INSERT ROD INTO DRILLED HOLE BREAKING CAPSULE WITH POINTED END OF ANCHOR ROD. TURN ON DRILL AND DRIVE ANCHOR DOWNWARD UNTIL THE RECOMMENDED EMBEDMENT DEPTH IS ATTAINED.

5. REMOVE IMPACT SOCKET AND DRILL FROM ANCHOR ROD. REMOVE EXCESS RESIN FROM AROUND HOLE. AVOID DISTURBING ANCHOR ROD UNTIL ADEQUATE CURE TIME IS REACHED.

6. INSTALL MATERIAL TO BE FASTENED AFTER RESIN HAS CURED.

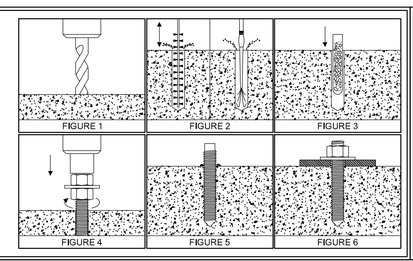

THESE DETAILS ARE NOT INDICATIVE OF CONCRETE THICKNESS. CONSULT LOCAL CONTRACTOR.

ALL FOUNDATIONS, INCLUDING DETAILED DESIGN, ANCHOR BOLTS, ANCHOR PLATES, PIPES, CURB ANGLES, LADDER AND COVER PLATES FOR OPEN PORTION OF PIT, AS REQUIRED, TO BE FURNISHED BY THE CUSTOMER.

LOADING INDICATED BOTH THE WEIGHT OF THE MACHINE AND WORK LOADS.

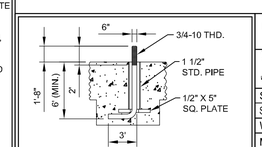

TYPICAL ANCHOR BOLT

wheelabrator shaping industry

This Drawing And The Design Shown Therein Is The Confidential Property of WHEELABRATOR And Use or Copies Thereof Cannot Be Made Without Permission.
WHEELABRATOR is a Registered Trademark of WHEELABRATOR TECHNOLOGIES, INC.

Rev	EC	Date	Sign.
0	170208	tidu	
1	170315	tidu	
2	170320	tidu	
3	170421	grst	

Size: D
Scale: 3/4" = 1'-0"
Weight: 20394.945 lb
Material:
Dim:

Created: 170605 tidu
Checked:
Approved: 170606 tidu
Wear/Spare part: Spare
Owned by: NA

601207

General assembly MMB-27-4-20 (460)
MMB (NA)

Drawing No. 11044635
Revision 4
Sheet 2 of 2
Minor rev. 0

Origin: 10651710
Replacement for:
Replaced by:

New Design:
Old Design:
Item No.: 11044635
IMPERIAL

BlueStar Managed Drawing