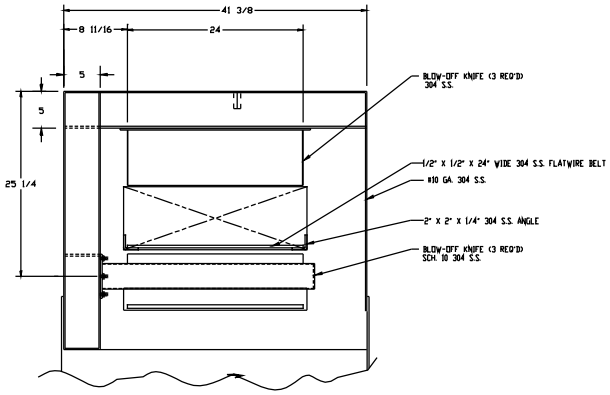

SECTION THRU BLOW-OFF STAGE
PARTS GOING

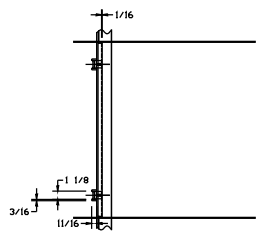

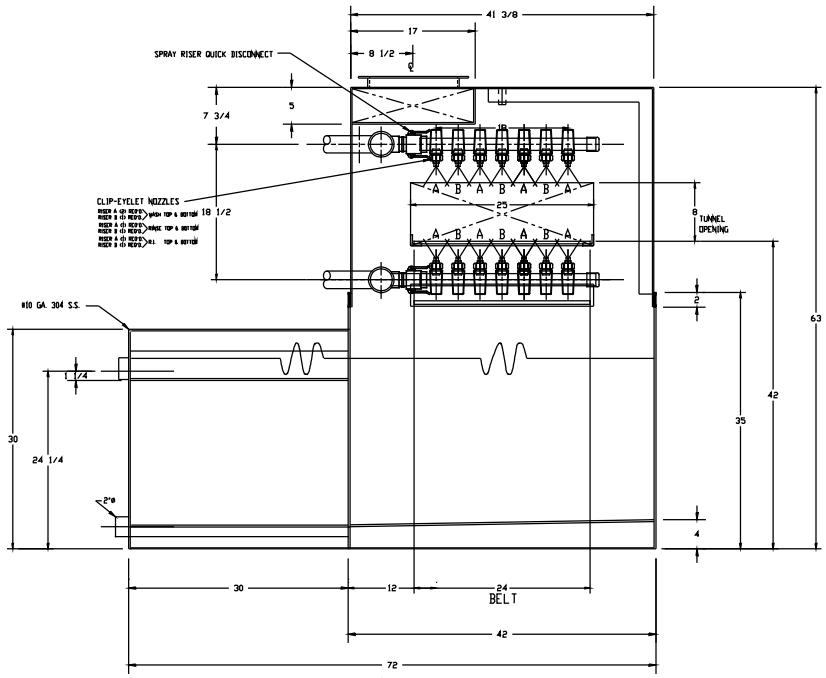

SECTION THRU WASH STAGE
PARTS GOING

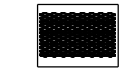

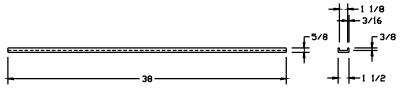

1 1/2" X 5/8" X 38" LG.
304 S.S. FLAT BAR (2 REQ'D.)

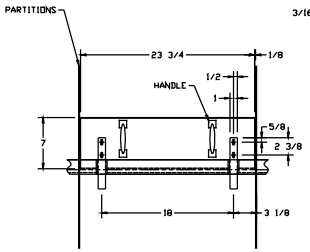

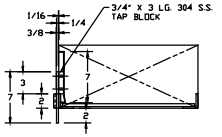

PARTS GUIDE

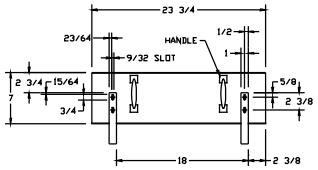

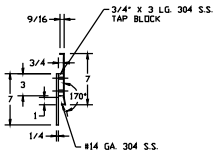

PARTS GUIDE DETAIL

THIS DRAWING AND ALL INFORMATION THEREON IS THE PROPERTY OF CAE RANSCHOFF, INC. AND IS CONFIDENTIAL AND MUST NOT BE MADE PUBLIC OR COPIED UNLESS AUTHORIZED BY THEM AND IS SUBJECT TO RETURN UPON DEMAND.

ALL DIMENSIONS ARE IN INCHES UNLESS OTHERWISE SPECIFIED.

UNLESS NOTED OTHERWISE, THE FOLLOWING TOLERANCES SHOULD BE USED FOR ALL CAE RANSCHOFF, INC. FABRICATION.

DECIMALS
1 PLACE ±1"
2 PLACES ±.01"
3 PLACES ±.001"
4 PLACES ±.0005"

FRACTIONS ±1/16"
ANGULAR ±1/2°

NO.	DATE	INIT.	REVISION DESCRIPTION

CAE — CAE Ranschoff

DRAWN BY PAK	DATE 9/97	CUSTOMER TOLEDO TECHNOLOGIES	
CHECKED BY	DATE	TITLE SURECLEAN 24" WIDE CONVEYOR WASH, RINSE, RI, AND BLOW-OFF	
DRAWING SCALE 1/6			
PLOT SCALE 1/6		SHEET 3 OF	DRAWING NO. 3180M03