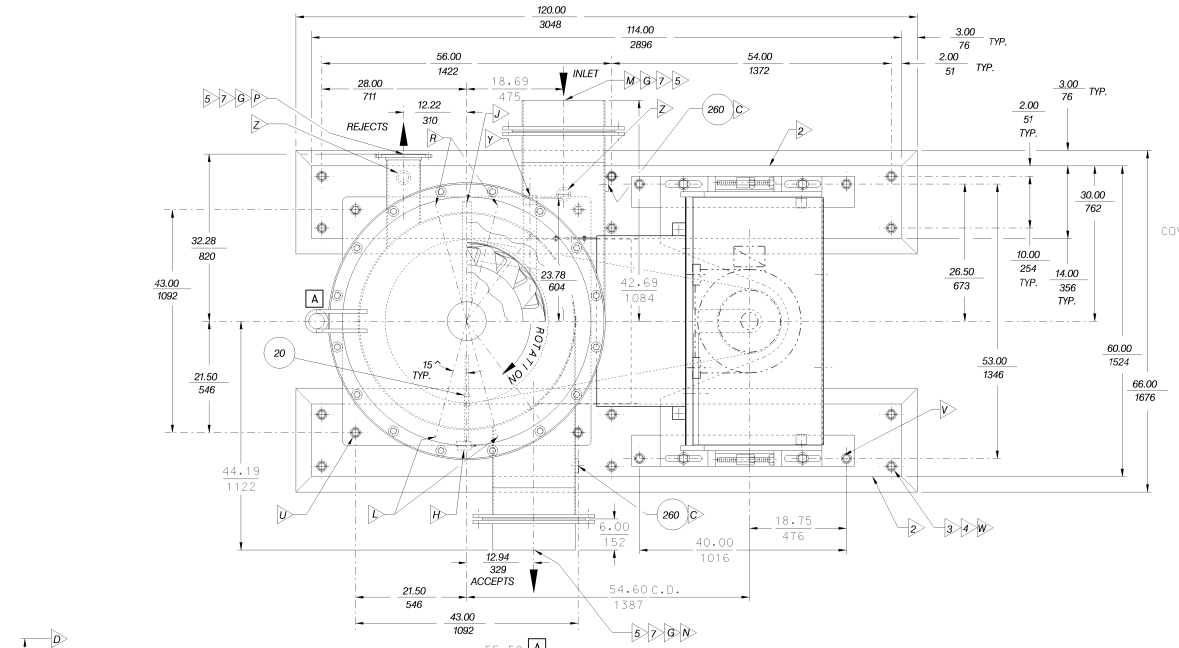

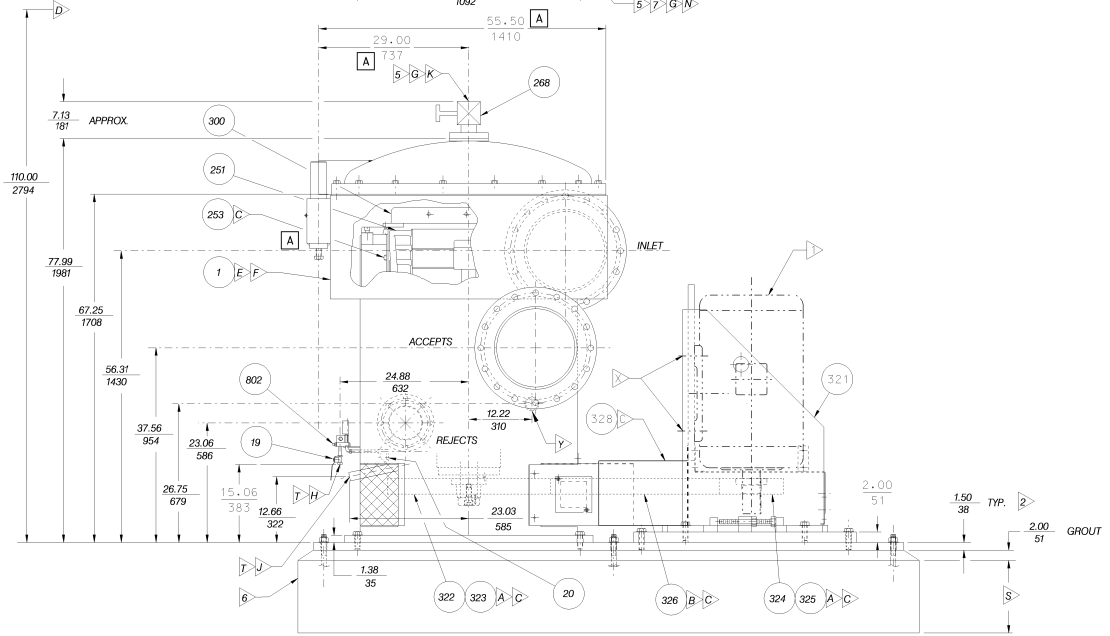

FOR OPERATION @ 351RPM

SUPPLIED BY CUSTOMER			
ITEM	PART NUMBER	DESCRIPTION	QTY
32		THROTTLING VALVE	1

SUPPLIED BY VOITH SULZER				
ITEM	PART NUMBER	DESCRIPTION	DRAWING NUMBER	QTY
1	135271	ASSY VERTICAL SCREEN SIZE 20 W/MECH SEAL COTTONBALL ACCEPTS	D36-100025	1
19	104232	0.25" ON-OFF VALVE		1
20	722387	0.25" CHECK VALVE		1
251	109103	ASSY ROTOR 316L VERT SCRN 20 27 VANE W/CONES BLASTED FINISH	D36-300002	1
253	07.1180.90	BSKT SCRN 316 20 VERT SCRN C-BAR.0.008" SLOTS.5.0% DA.12"	07.2026.30	1
260	111118	WELD-ON NIPPLE (PMC-LT-07-SAN) FOR PRESSURE GAUGE		2
268	104195	1.50" THROTTLING VALVE		1
300	104224	TOOL BSKT REMOVAL VPS20	C36-750004	1
321	111661	ASSY MOT FRAME & SLIDE RAILS	D35-100008	1
322	112139	SHEAVE DRIVEN (4 GR) 31.5 OD		1
323	109264	BSHG QD F TYPE 3.31 SHAFT W/0.8800.62 SHALLOW KEY		1
324	106373	SHEAVE MOTOR (4 GR) 12.5 OD		1
325	106571	BSHG QD E TYPE 3.38 SHAFT W/0.8800.50 SHALLOW KEY		1
326	112614	V-BELT POWERBAND 4/5VX1800		1
328	111104	ASSY GUARD DRIVE 20 VERT SCRN	D36-724010	1
802	119146	FLOW METER.SAFEMATIC SAFEUNIT W/ELEC ALARM SFETAL-08-10		1
SUPPLIED BY CUSTOMER				

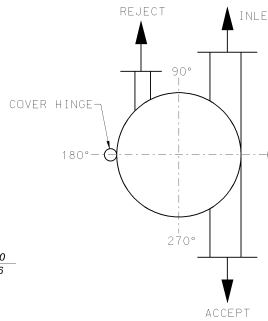

CUSTOMER ORIENTATION DETAILS

1. MOTOR 75 HP. 900 RPM. 444T FRAME WITH CONTROLS AND WIRING. DRIVE INDICATED IS TO HAVE MOTOR EQUIPPED W/BEARINGS SIZED FOR THE APPROPRIATE SHEAVE COMBINATION. MIN BELT PULL = 1877 LBS.
2. SOLEPLATES
3. ANCHOR BOLTS
4. SHIMS WITH AMPLE SUPPORT AREA
5. INLET, ACCEPT AND REJECT PIPNG WITH SUPPORTS
6. FOUNDATION, ERECTION, AND INSTALLATION
7. FABRICATION TOLERANCES APPLY TO NOZZLE LOCATIONAL DIMENSIONS. CUSTOMER MUST PROVIDE LOOSE STYLE ANGLE FACE RINGS AND SUFFICIENT NUMBER OF FIELD FIT JOINTS IN ADJOINING PIPING TO ACCOMMODATE MINOR VARIATIONS IN TRUE POSITION.

NOTES

- A> ALIGN DRIVE & DRIVEN SHEAVES TO MANUFACTURER'S SPECIFICATIONS.
- B> TENSION BELTS TO MANUFACTURER'S SPECIFICATIONS.
- C> CUSTOMER IS RESPONSIBLE FOR THE INSTALLATION OF:
  1. DRIVE SHEAVE AND BELTS
  2. SCREEN BASKET
  3. PRESSURE GAUGE, TRANSMITTER, OR TRANSDUCER
  4. DRIVE GUARD
- D> MINIMUM OVERHEAD CLEARANCE REQUIRED TO REMOVE THE SCREEN BASKET AND ROTATING ASSEMBLY. HOOK AND HOIST NOT INCLUDED.
- E> MACHINE WT: 5,200 LBS EMPTY & 9,400 LBS FULL MOT SPRT WT: 2000 LBS BASKET WT: 200 LBS ROTOR WT: 572 LBS BRG CRTG WT: 660 LBS SOLEPLATE WT: 680 LBS EACH ADDITION FOR DYNAMIC LOADS 150%
- F> MAXIMUM OPERATING PRESSURE: 75 PSI. DO NOT EXCEED!
- G> CUSTOMER TO SUPPORT PIPING TO PREVENT ANY EXTERNAL LOADING ON THE SCREEN.
- H> CUSTOMER TO SUPPLY SEAL WATER TO THE SCREEN AT 1 GPM AND 30 PSI ABOVE THE SCREEN'S OPERATING PRESSURE. (0.25 NPT) SEAL WATER MUST BE FILTERED TO BE FREE OF PARTICLES LARGER THAN 50 MICRONS.
- J> SEAL WATER DRAIN (DO NOT PIPE TO OR FROM THIS DRAIN!)
- K> LIGHTWEIGHT REJECTS (1.50 NPT) (200# FNW GATE VALVE).
- L> GREASE FITTINGS FOR UPPER & LOWER BEARINGS
- M> 16.00 INLET METAL TO METAL CONNECTOR W/VAN STONE FLANGE (150# DRILL)
- N> 16.00 ACCEPT METAL TO METAL CONNECTOR W/VAN STONE FLANGE (150# DRILL)
- P> 6.00 REJECT VAN STONE FLANGE (150# DRILL)
- R> BNC ANALYZER HOOK UP FOR REMOTE MOUNTING ACCELEROMETER FOR MONITORING UPPER AND LOWER BEARING VIBRATION.
- S> FOUNDATION HEIGHT BY CUSTOMER. TYPICAL 12.00 - 18.00 INCHES
- T> NOT SHOWN IN CORRECT ORIENTATION. SEE PLAN VIEW
- U> 1.19 DIA. HOLE THRU (4 PLACES) HARDWARE BY CUSTOMER
- V> 1.19 DIA. HOLE THRU (4 PLACES) HARDWARE BY CUSTOMER
- W> 1.19 DIA. HOLE THRU (12 PLACES) HARDWARE BY CUSTOMER
- X> 0.81 DIA. HOLE THRU (4 PLACES) HARDWARE BY CUSTOMER
- Y> CUSTOMER TO SUPPLY DILUTION WATER TO THE SCREEN AT 60 GPM AND 15 PSI ABOVE THE SCREEN'S OPERATING PRESSURE. (2.00 NPT) CONTINUOUS DILUTION WATER MAY BE NEEDED WHEN SCREENS ARE RUNNING WITH A STOCK CONSISTENCY ABOVE 2.0%.
- Z> 2" DRAIN WITH PLUG

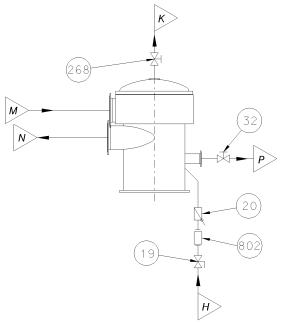

PIPING DIAGRAM 20 VERT SCRN
(DO NOT USE FOR ORIENTATION)

INTER LAKE PAPER
KIMBERLY, WI
VERTICAL SCREEN AFVPS20
SERIAL NO. 21833
CUST. P.O. NO. 79504314X13
CUST. EQUIP. NO.
VOITH SULZER JOB NO. 50902

REV.	DESCRIPTION	REV. SYM.	NO. OF PLACES	DATE	NAME	CHECK
A	REVISED HINGE COVER ASSY		4	12-06-99	LX	FMW

THE DATA CONTAINED HEREIN IS PROPRIETARY AND CONFIDENTIAL. REPRODUCTION, PUBLICATION OR DISTRIBUTION OF ANY PART REQUIRES WRITTEN CONSENT OF VOITH SULZER PAPER TECHNOLOGY NORTH AMERICA INC. THIS DATA IS THE PROPERTY OF VOITH SULZER PAPER TECHNOLOGY NORTH AMERICA INC., AND ITS POSSESSION CONFERS NO LICENSE TO USE OR TO DISCLOSE IT TO OTHERS FOR ANY PURPOSE WHATSOEVER. ALL RIGHTS RESERVED.

PROJECTION

	DATE	NAME
1999		
DR.	08-04	LX
CH.	11-09	FMW
AP.	11-09	FMW

REF:

VOITH SULZER
PAPERTECHNOLOGY

TITLE: INSTALLATION DETAILS
VERTICAL SCREEN AFVPS20

CODE/WORKUNIT

SIZE	ITEM NO.	DWG NO.
D	134948	D36-130164

VOITH SULZER PAPER TECHNOLOGY NORTH AMERICA INC. APPLETON, WI 54911

SCALE: 1:12 WEIGHT: LBS SHEET: 1 OF 1

DATE/TIME: $$$$$DATE/TIME$$$$$
FILE: $$$$CONF$FILE$$$
VDCS NAME: $$$$$$$VDCS$NAME$$$$$$$