SERVICE MANUAL

Multiskan RC/MS/EX

Thermo Electron Corporation, Ratastie 2, P.O.Box 100, 01621 Vantaa, Finland
Telefax +358-9-32910 409, Tel. +358-9-329 100

280 6100

MASTER INDEX OF

MULTISKAN RC/MS/EX

SERVICE MANUAL

351/352-100-X Rel. 3

Multiskan RC/MS/EX Service Manual

Updates

Service manual version 01 → 02

Release	1.0	3.0/3.0	2.0	2.0	2.0	1.0	1.0	1.0	1.0	1.0	1.0	
Chapter	1	2	3	4	5	6	7	8	9	10	11	12

Description: There has been added a functional description of pcb MOTCU-03 (section 3), component layouts of pcb MUSCU-2A and MUSME-01 (section 4) and a schematic diagram of pcb MUSCU-RC-01 (section 5).

Service manual version 02 → 03

Release	1.0	6.0/8.0/1.0	2.0	2.0	2.0	1.0	1.0	1.0	1.0	1.0	2.0	
Chapter	1	2	3	4	5	6	7	8	9	10	11	12

Description: Operation manuals and Spare parts have been upgraded (section 2 and 11). Multiskan EX has been added in the same manual.

Multiskan RC/MS/EX Service Manual

8. TESTING AND ADJUSTING
   - Cover page
   - Contents
   - Lamp voltage
   - Computer Control Commands in All Modules
   - Testing and Adjusting for Multiskan RC
   - Testing and Adjusting for Multiskan MS

9. POWER SUPPLY
   - Cover page
   - Contents
   - SR 924199 Parts layout, 2 pages
   - SR 924100 Schematic diagram

10. WIRING DIAGRAMS
   - Cover page
   - Contents
   - Track cover grounding wire
   - Power cable
   - Filter motor cable
   - Fan assembly
   - LCD display
   - Lamp cable
   - CHOPT - Power
   - CHOPT - MUSCU
   - CHOPT -motor
   - MUSCU - MUSME
   - Track motor grounding wire
   - Solenoid
   - IR-Reader assembly
   - Hall sensor assembly
   - Grounding wire
   - Serial cable Multiskan MS - MAC
   - Serial cable Multiskan MS - PC
   - Grounding wire
   - Grounding wire
   - RS-232C
   - Serial cable PC
   - Serial cable MAC

11. SPARE PARTS
   - Multiskan RC/MS/EX Spare part list

12. BULLETINS

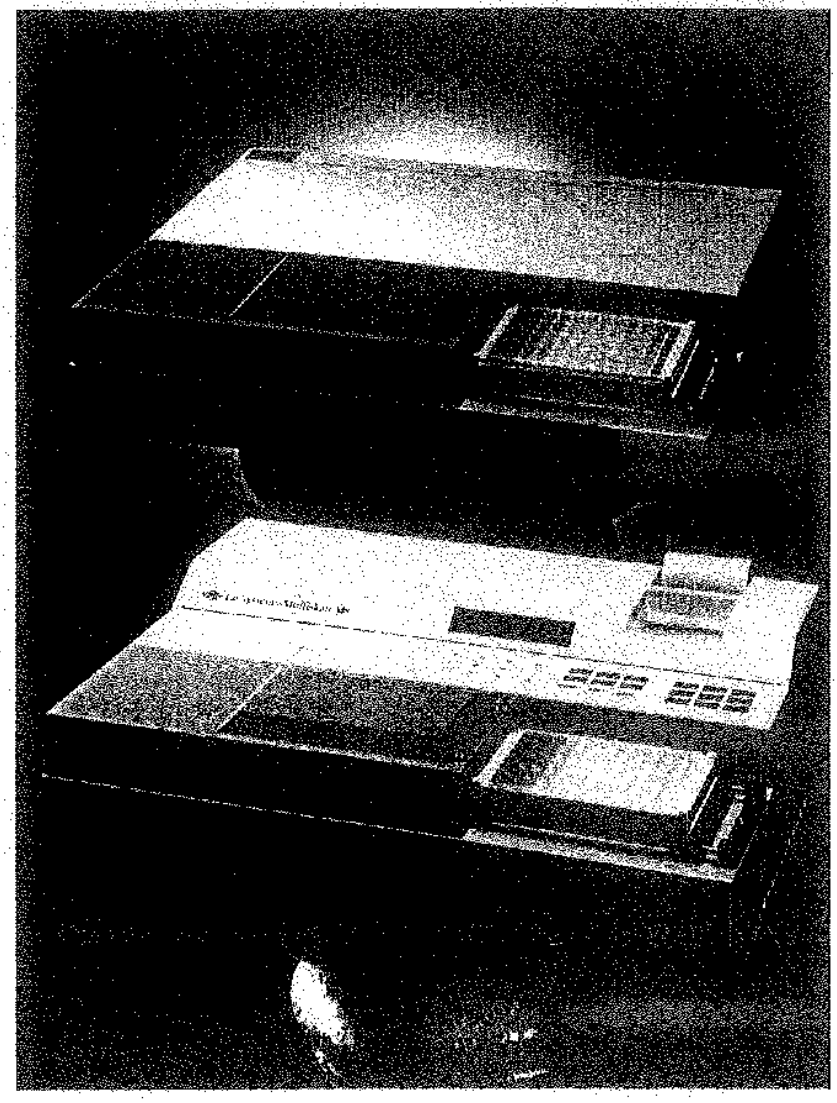

Proven microplate reader with exceptional flexibility

- Proven optical system guarantees accurate and reliable results
- Exceptional flexibility through choice of options
- Selection of up to 8 different filters
- Optics for visible or UV visible area
- Agglutination measurement system as option
- Two basic models: PC controlled or with built-in software

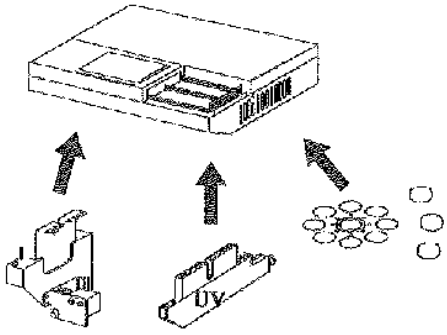

Multiskan RC with options

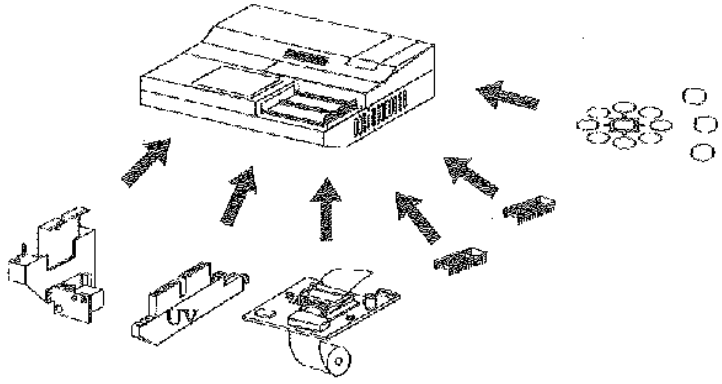

Multiskan MS with options

The New Multiskan Family - the proven industry standard for microplate readers now offers superior flexibility

Without compromising on any of the qualities that have helped Multiskan set the industry standard, Labsystems has now developed a New Multiskan Family to offer the customer the greatest flexibility available.

The New Multiskan Family consists of two basic reader models: Multiskan RC and Multiskan MS. Multiskan RC is fully computer-controlled. Multiskan MS comes with built-in software.

By selecting the desired basic reader model and the combination of options, the user can optimize the unit's performance according to his or her work.

Options for the New Multiskan Family include a choice of up to 8 different filters, optics for visible or UV area and an agglutination measurement system.

For Multiskan MS a specially designed printer and additional cutoff and/or cubic spline programs are available.

All Multiskan models are lightweight, compact instruments designed to suit every laboratory.

Labsystems offers powerful external software for Macintosh, DOS and Windows environments. Also an easy-to-use Windows-based software is available to transfer measurement data to other software packages, for example, to spreadsheet calculation programs

Technical specifications

Optical specifications

Spectral range:	depends on the optical system selected: 400-750 nm or 340-750 nm
Read out range:	0-3.5 A
Measurement range:	0-2 A at continuous mode, 0-2.5 A at step mode
Accuracy:	±2% or 0.007 A, typical value: ±1%
Precision:	CV<0.5% or 0.007 A, typical value: CV<0.2%
Linearity:	±2% or 0.007 A, typical value ±1.5%

General specifications

Reading speed:	5 s
Interface connections:	serial interface (Multiskan RC and MS). parallel interface (Multiskan MS)
Weight:	11 kg

Multiskan MS internal software (depends on the options selected)

Measurement modes:	single wavelength dual wavelength two point kinetic
Cutoff calculations:	fixed, floating
Curve fits:	linear regression point to point cubic spline
Shaking:	linear shaking, 3 speeds
Scanning over well:	20 readings / well
Program cards:	yes, for customized software (kit protocols)

Ordering information

cat. no	Description	cat. no	Description
	Multiskan RC		Multiskan MS options
51118007	Multiskan RC, 100-120V	51118040	Agglutination optics
51118017	Multiskan RC, 200-240V	51118050	UV optics
		51118060	Printer
	Multiskan RC options	51118070	Cutoff program module
51118040	Agglutination optics	51118080	Cubic spline program module
51118050	UV optics		
			Filters for Multiskan RC and Multiskan MS
	Multiskan MS	142xxx0	Filter in the range 340-750 nm
51118027	Multiskan MS, 100-120V		xxx=wavelength
51118037	Multiskan MS, 200-240V		

For more information and a demonstration, please contact your local Labsystems supplier.

Labsystems

Manufactured by
Labsystems Oy
P.O. Box 8
FIN-00881 Helsinki, Finland
Tel. +358-0-75821
Telefax +358-0-755/610
Telex 123569 labsy fi

Distributed by

Catalogue no. 51277.0

LABSYSTEMS

Multiskan RC
Version 6.0

Operation Manual

LABSYSTEMS
3.1.1997

Cat. no 1506250

LABSYSTEMS MULTISKAN RC (type 351)

OPERATION MANUAL

CONTENTS

SAFETY SYMBOLS USED IN MULTISKAN RC

	Power ON
	Power OFF

WARNING MARKINGS USED IN THE DOCUMENTATION

	Caution, risk of personal injury to the operator or a safety hazard for the surrounding area.
	Caution, risk of damage to the instrument, other equipment or loss of performance or function in a specific application.

1. INSTALLATION

1.1 Unpacking

Unpack Multiskan® RC carefully and check for any damage that may have been caused during transportation. If any part is damaged or missing, contact the local Labsystems representative.

Keep the original package for future transportation.

1.2 Environmental Requirements

Locate Multiskan RC to avoid exposure to excess dust, vibrations, strong magnetic fields, direct sunlight, draft, excessive moisture or large temperature fluctuations.

Leave sufficient clearance (10 cm) at both sides of the unit for adequate air circulation.

1.3 Installation

Remove the two cover retaining screws (Fig.1:2) and lift up the cover.

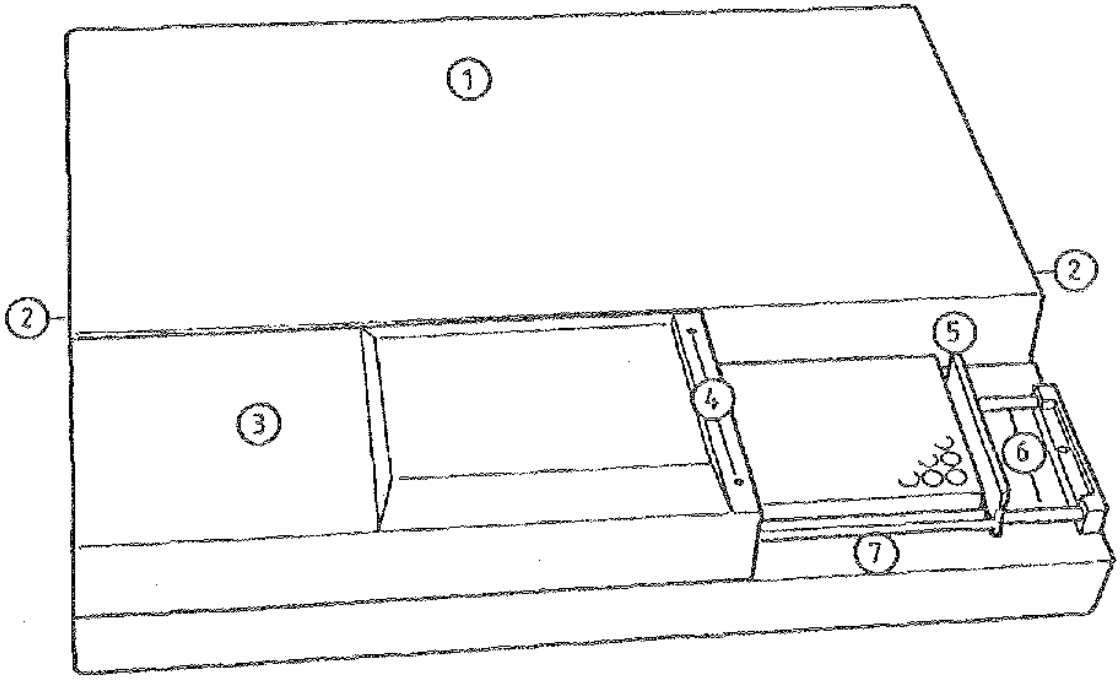

1. Instrument cover
2. Retaining screws of the instrument cover
3. Measuring assembly cover
4. Retaining screws of the measuring assembly cover
5. Plate carrier
6. Transfer rails
7. Track

Figure 1. Multiskan RC

Unpack the filter wheel. Check that all filters are clean and undamaged. Place the wheel into the filter slot (Fig. 2:5) so that the toothed edge faces the rear of the instrument. A magnetic locking mechanism will automatically lock the wheel in the correct position and the optical filter position sensor will make sure that the correct filter is used during measurement.

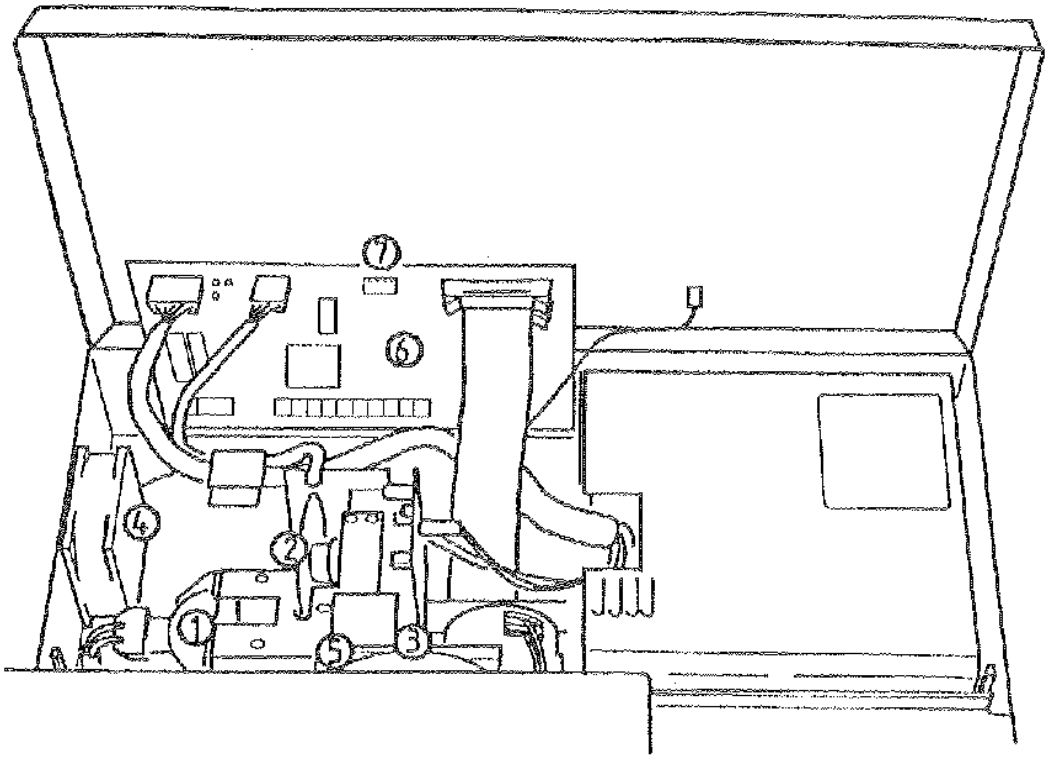

1. Lamp
2. Chopper
3. Filter
4. Fan
5. Filter wheel slot
6. Processor circuit board
7. Serial RS-232C DIL switches

Figure 2. Multiskan RC internal view

NOTE: Do not touch the reflective surface of the lamp or the bulb itself.

Unpack the lamp. Fit the lamp contacts to the terminal socket inside the instrument (Fig.3). Place the lamp in its place (Fig. 2:1).

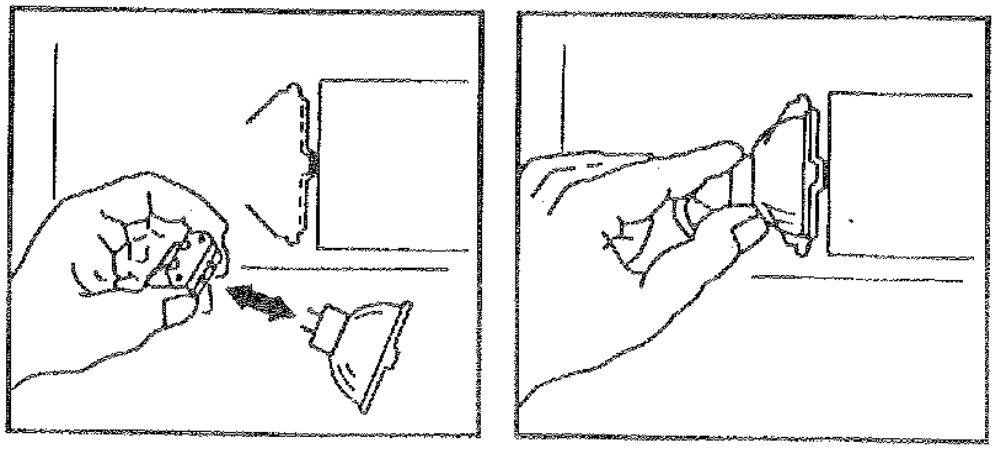

Figure 3. Installation of lamp

Check visually that there are no loose parts inside the instrument.

Close the instrument cover and replace the retaining screws.

Multiskan RC does not produce operating noise at a level which could cause a hazard. No sound level measurements are needed after installation.

Connect the mains supply cord to the mains power socket (Fig. 4:2). The power supply has automatic 100-120 / 200-240 VAC range selection. If a suitable mains supply cord is not provided, use only cords certified by the local authorities.

Connect the instrument to a correctly installed line power outlet which has a protective conductor also called as earth or ground.

CAUTION: **Interruption of the protective conductor inside or outside the instrument or disconnection of the protective conductor terminal may make the instrument dangerous.**

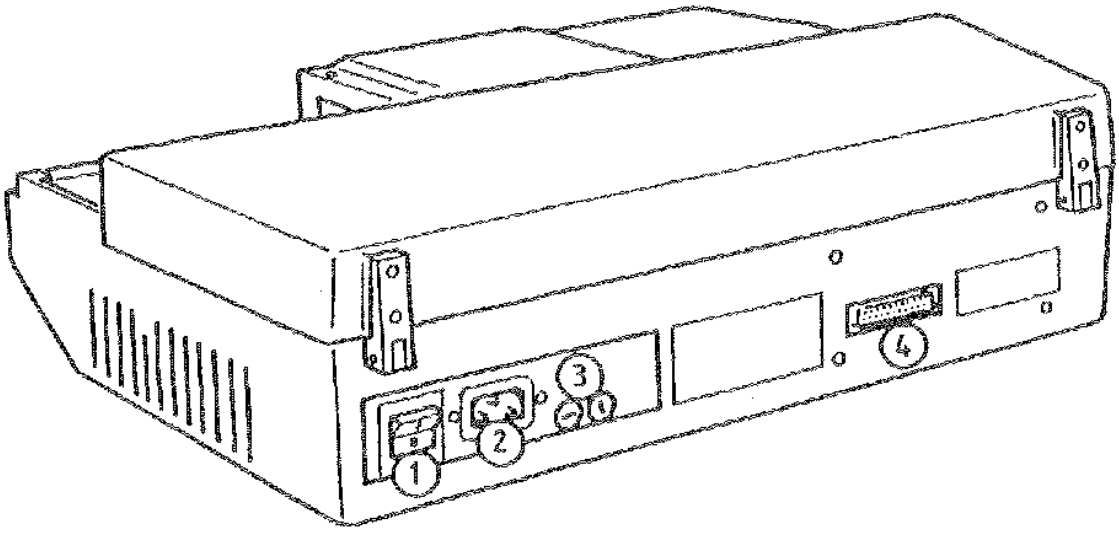

1. Power switch
2. Power input socket
3. Fuses
4. RS-232C interface connector for a computer

Figure 4. Multiskan RC rear view

Connect a computer according to requirements. For instructions about the interface system, see Appendix 2.

1.4 Transporting for Service

Repack the instrument according to instructions enclosed in the package. Use the original package. Indicate the fault. Inform about the use of hazardous materials.

2. FUNCTIONAL DESCRIPTION

2.1 Introduction

Multiskan RC is an eight-channel vertical light path filter photometer designed to perform both standard photometric and agglutination measurements under the control of a computer.

The wavelength (400 - 750 nm or optional 340 - 750 nm) is selected using maximum eight high quality interference filters held in a filter wheel.

The readings can be processed via a serial RS-232C interface.

2.2 Measurement Principle

2.2.1 Photometric Measurements

Multiskan RC utilizes the original Labsystems' concept of vertical photometry in which the light beam passes through the whole sample.

In vertical photometry, the absorption of light is proportional to the amount of light absorbing substance in the well.

Absorption is expressed by the following equation:

$$A = \frac{a}{S} m,$$

where A = absorbance, a = molar absorptivity of the substance, m = mass of absorbing substance and S = cross-sectional area perpendicular to the light path.

The advantages of the vertical light path measurement are:

(1) inaccurate pipetting of nonabsorbing liquids does not affect the measured absorbance values

(2) evaporation of nonabsorbing liquids during the reaction does not affect the measured absorbance values and

(3) a certain degree of inhomogeneity in the solution, for example as a result of layering in turbidity measurements, does not affect the results.

The optical system comprises the following components (Fig. 5a):

1 quartz-halogen lamp
2 chopper wheel
3 aperture and condenser lens
4 semi-transparent mirror
5 aperture
6 interference filter (filter wheel)
7 optical fibre bundle
8 focusing lenses
9 upper lenses and detectors

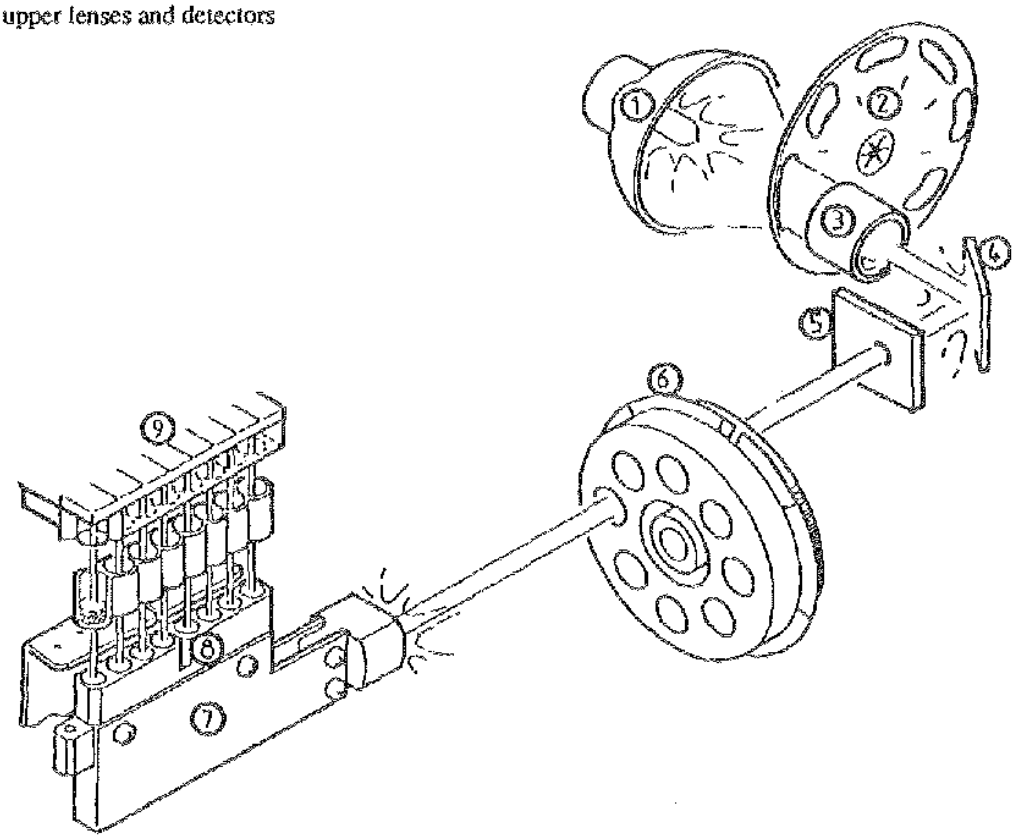

Figure 5a. Optical system

Light source:

The light source is a quarz-halogen lamp (Osram 64607, 8V/50W), which is equipped with an aluminium-coated elliptical reflector.

To prolong the service life of the lamp, the instrument should be switched off when not in use. Warming-up period of 1 minute has to be allowed before measuring.

Chopper wheel:

The chopper wheel chops the light beam to minimize electronic noise.

Semi-transparent mirror:

After passing through the condenser lens the light beam impinges on the semi-transparent mirror. Part of the visible light and all longer wavelengths pass through the mirror, and the UV and the rest of the visible light is reflected. This arrangement eliminates heating of the interference filter and evens out the spectral intensity distribution.

Interference filter:

The wavelength is selected from the maximum of eight filters held in the filter wheel.

Fibre bundle:

After passing through the interference filter, the light beam reaches the common end of the fibre bundle, which divides the beam into eight equal parallel beams and deflects the beams upwards.

Focusing lenses:

After being divided the light passes through a focusing system of eight lenses.

Detectors:

The light beams pass through the bottoms of the wells through the samples via upper lenses to the detectors, which measure the intensity of light.

2.2.2 Agglutination Measurements

Agglutination measurements are performed by using special optics (pinhole optics) (Fig. 5b). The instrument scans over each well measuring a 20 points well profile taking 20 readings. Readings are then down-loaded to a P.C. for further interpretation.

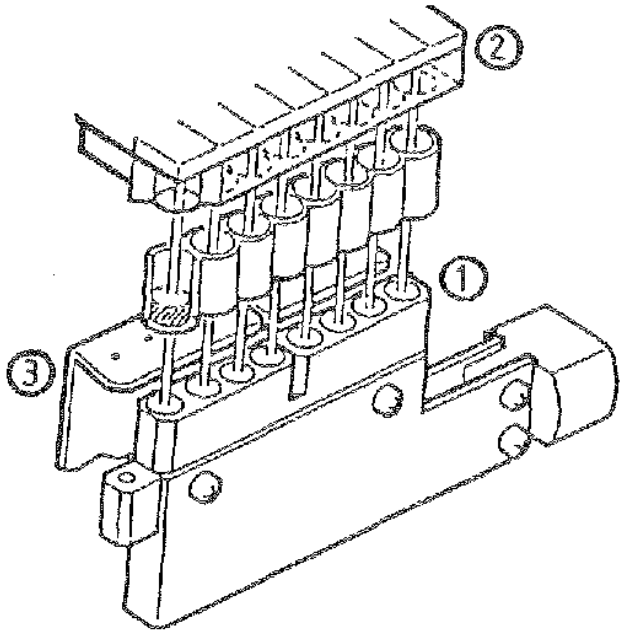

1. Focusing lenses
2. Upper lenses and detectors
3. Pinhole plate

Fig. 5b. Agglutination optics

2.3 Instrument Layout

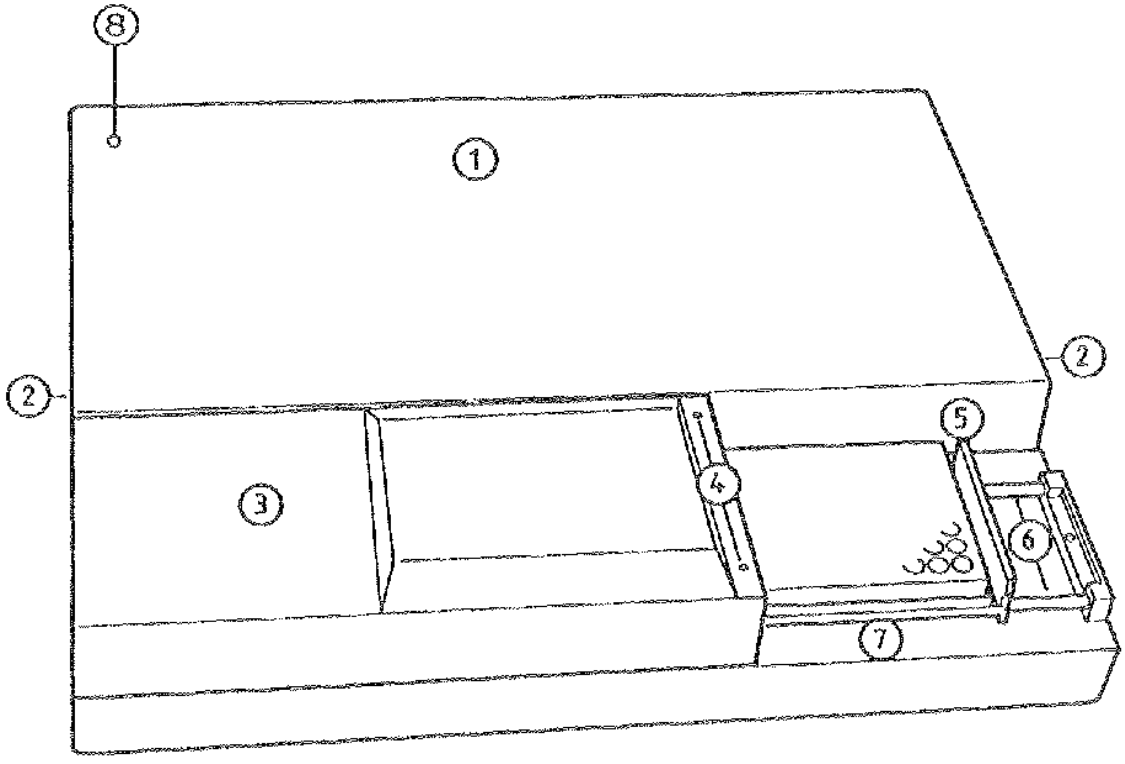

1. Instrument cover
2. Retaining screws of the instrument cover
3. Measuring assembly cover
4. Retaining screws of the measuring assembly cover
5. Plate carrier
6. Transfer rails
7. Track
8. Status LED, three colour

Figure 6. Multiskan RC

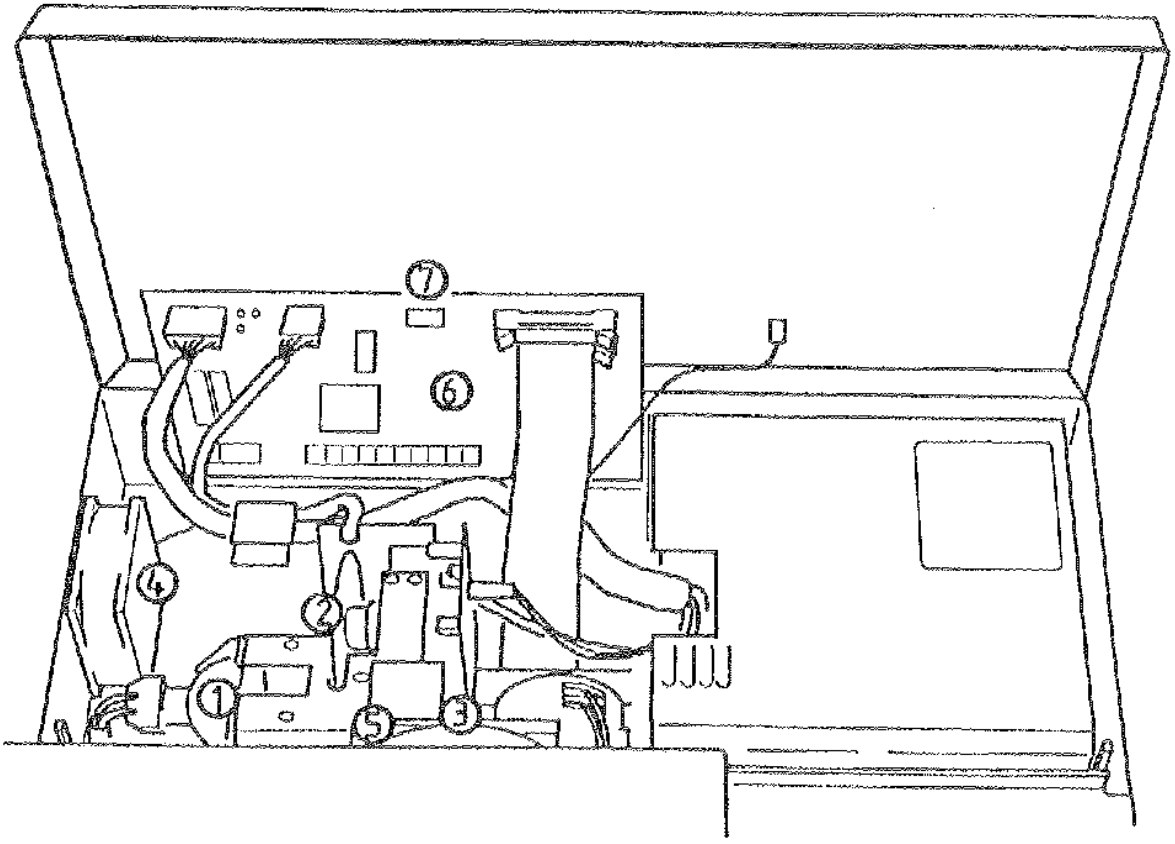

1. Lamp
2. Chopper wheel
3. Filter
4. Fan
5. Filter wheel slot
6. MUSCU - RC processor board
7. Serial RS-232C DIL switches

Figure 7. Multiskan RC internal view

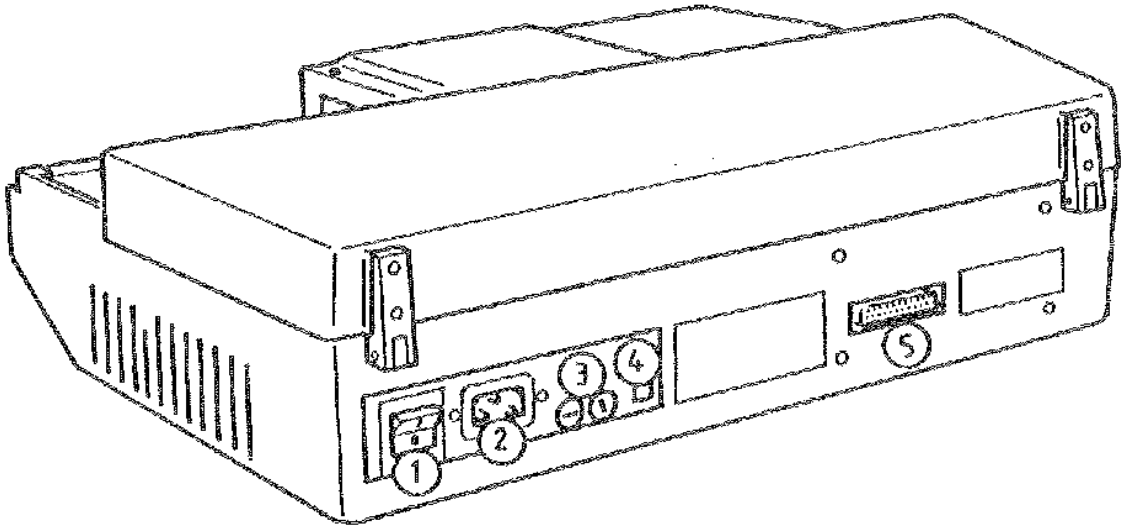

1. Power switch
2. Power input socket
3. Fuses
4. Voltage selector switch (if exist)
5. RS-232C interface connector for a computer

Figure 8. Multiskan RC rear view

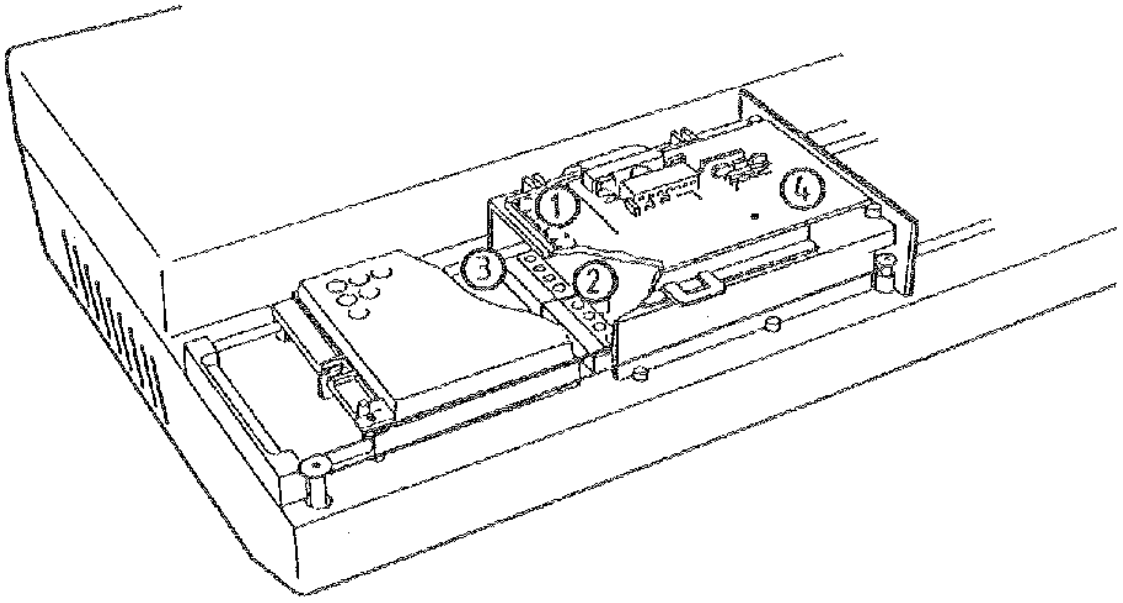

1. Detectors
2. Focusing lenses
3. Pin hole plate (option)
4. MACU circuit board

Figure 9. Measuring assembly

3. OPERATION

3.1 How to Get Started

Switch the instrument on using the power switch at the rear of the instrument (Figure 8:1). The status LED shows orange and in autocalibration procedure the instrument selects the proper light intensity for each filter. When the instrument is switched on, wait about 1 minute for warming up and autocalibration, then the status LED turns green and the instrument is ready to receive commands.

Colours of the status LED:

Colour	Explanation
Green	Instrument is ready to receive a (new) command.
Orange	Instrument is busy, performing a task.
Red	An error has occurred.

3.2 Computer Control Commands

All commands from the computer to the reader are in ASCII format and have a general format:
<COMMAND><PARAMETERS><LF>
where <LF> is the linefeed character, decimal 10.

Commands may be in upper- or lowercase and punctuation characters whitespace, tab, comma and <CR> (carriage return) may be used.

For example, all following commands are valid:
FM123456787654<LF>
Fm 1 2 3 4 5 6 7 8 7 6 5 4 <CR><LF>
fm 1,2,3,4,5,6,7,8,7,6,5,4<LF>

Multiskan RC responds to the following commands:

R	Starts the computer control. This command resets the measurement mode to 0, current column to 0 and the mixer speed to maximum. The Multiskan RC will not respond to any other command before R is received.
F1...F8	Filter selection.
FMnn...n 12	Individual filter is selected for each column. n=filter number, numbers from 1 to 8 can be selected.
E0	Selection of continuous plate movement.
E1	Selection of stepwise plate movement.
A	Air blank.
B	Reagent blank on column defined by command S.
P	Measuring the whole plate and sending the results via the interface in the microplate format. Relative starting column is 0 after this command.
PM	Measuring the whole plate using individual filter for each column and sending the results via the interface in the microplate format.
Pn	Measuring the whole plate n times (n = 1-99) and sending the results via the interface in the microplate format. Relative starting column is 0 after this command.
Mn	Measuring n columns starting from the starting column (n = 1-12)
Sj	Determining the relative starting column (j = 1-12)

Gn	Drive plate column to measure position, for service purposes.
I	Initializing the starting column so that the absolute starting column is 1 Example: I LF S2 LF M4 LF (columns 3, 4, 5 and 6 are measured)
O	Driving the plate out and initializing the starting column so that the absolute starting column is j. Example: O LF S2 LF M4 LF (columns 2, 3, 4 and 5 are measured)
Zn	Shaking of the microplate, n is shaking time in seconds (n = 00-60) Example: Shaking of 5 s is entered as Z05 or Z5.
X1	Set shaking speed to maximum. (This speed is selected as a default.)
X2	Set shaking speed to 66 % of maximum.
X3	Set shaking speed to 33 % of maximum.
WM <points>	Agglutination measurement is performed. The parameter <points> is optional and defines which ones of the 20 measured profile points are sent in the response. The parameter is a string of ASCII "1":s and "0":s. The string length is free, the character in the middle of the string corresponds to point 10. If the string is shorter than 20 characters, the undefined points will not be sent in response. If <points> is left out, absorbances of all 20 points will be sent.
WP	Agglutination measurement is performed. The response is all 20 sets of data in plate format without measurement numbers.
T	Date and time. See note 1.
V	Version number of the software, for service purposes.
Q	Quit the computer control.
STATUS	Reader status information, for service purposes.
C	Ask number of currently selected software module. This command is included for compatibility with Multiskan Multisoft.
C<module>	Select software module <module>. Module number may be 1 or 2. This command is included for compatibility with Multiskan Multisoft, it is not necessary to send this command when switching between absorbance and agglutination measurement. Current column after this command is 0.
DATE<dd><mmm><yyyy><LF>	Set date. Parameter <dd> is the day of month, 1..31. Parameter <mmm> is three first characters of the english month name, JAN...DEC. Parameter <yyyy> is the year, 1993...2092. See note 1.
TIME<hh>:<mm>:<ss>:<LF>	Set time. Parameter <hh> is the hours, 0..23. Parameter <mm> is the minutes, 0..59 and parameter <ss> the seconds, 0..59. See note 1.
Note 1:	The following applies only if the real time clock/calendar option is not installed. If the date and time are not set by DATE and TIME commands, the date and time in reader responses are printed: --, --- ---- 00:00:00 The clock calendar is not running. If only time is set, the clock starts running, but the date remains --, --- ----. When the date is set, also the clock starts running. The start time before TIME command is 00:00:00. The real time clock/calendar option is not normally needed because computer have this feature.

3.3 Acknowledgement Messages

Multiskan RC acknowledges each command by sending a message. The following messages are used:

OK	The action has been successfully performed.
ERn	Error (see 3.4 Error Messages)
ER3	An invalid command that Multiskan RC was not able to understand.

The P and PM commands are acknowledged by sending values of the measured wells. Data flow to the computer is a follows:

DATA DATA DATA DATA DATA DATA DATA DATA DATA DATA DATA DATA CRLF
DATA DATA DATA DATA DATA DATA DATA DATA DATA DATA DATA DATA CRLF
DATA DATA DATA DATA DATA DATA DATA DATA DATA DATA DATA DATA CRLF
DATA DATA DATA DATA DATA DATA DATA DATA DATA DATA DATA DATA CRLF
DATA DATA DATA DATA DATA DATA DATA DATA DATA DATA DATA DATA CRLF
DATA DATA DATA DATA DATA DATA DATA DATA DATA DATA DATA DATA CRLF
DATA DATA DATA DATA DATA DATA DATA DATA DATA DATA DATA DATA CRLF
DATA DATA DATA DATA DATA DATA DATA DATA DATA DATA DATA DATA CRLF

where

CRLF = carriage return and line feed
DATA = 6 characters, where the first character can be a space or a minus sign and the remainder can be digits or decimal points

M commands are acknowledged by sending requested column number and column data in a row as follows:.

1 DATA DATA DATA DATA DATA DATA DATA DATA CRLF
2 DATA DATA DATA DATA DATA DATA DATA DATA CRLF
3 DATA DATA DATA DATA DATA DATA DATA DATA CRLF

WM command responses like the following example response of the command WM10101:

```
ABSORBANCES MEASUREMENT 8          Multiskan RC VERSION 0.0-0A
--.--- ---- 00:00:00               FILTER 2
CRLF
        1    2    3    4    5    6    7    8    9    10   11   12
CRLF
A     DATA DATA DATA DATA DATA DATA DATA DATA DATA DATA DATA DATA CRLF
B     DATA DATA DATA DATA DATA DATA DATA DATA DATA DATA DATA DATA CRLF
C     DATA DATA DATA DATA DATA DATA DATA DATA DATA DATA DATA DATA CRLF
D     DATA DATA DATA DATA DATA DATA DATA DATA DATA DATA DATA DATA CRLF
E     DATA DATA DATA DATA DATA DATA DATA DATA DATA DATA DATA DATA CRLF
F     DATA DATA DATA DATA DATA DATA DATA DATA DATA DATA DATA DATA CRLF
G     DATA DATA DATA DATA DATA DATA DATA DATA DATA DATA DATA DATA CRLF
H     DATA DATA DATA DATA DATA DATA DATA DATA DATA DATA DATA DATA CRLF
CRLF
CRLF
CRLF
ABSORBANCES MEASUREMENT 10
--.--- ---- 00:00:00
CRLF
        1    2    3    4    5    6    7    8    9    10   11   12
CRLF
A     DATA DATA DATA DATA DATA DATA DATA DATA DATA DATA DATA DATA CRLF
B     DATA DATA DATA DATA DATA DATA DATA DATA DATA DATA DATA DATA CRLF
C     DATA DATA DATA DATA DATA DATA DATA DATA DATA DATA DATA DATA CRLF
D     DATA DATA DATA DATA DATA DATA DATA DATA DATA DATA DATA DATA CRLF
E     DATA DATA DATA DATA DATA DATA DATA DATA DATA DATA DATA DATA CRLF
F     DATA DATA DATA DATA DATA DATA DATA DATA DATA DATA DATA DATA CRLF
G     DATA DATA DATA DATA DATA DATA DATA DATA DATA DATA DATA DATA CRLF
H     DATA DATA DATA DATA DATA DATA DATA DATA DATA DATA DATA DATA CRLF
CRLF
CRLF
CRLF
ABSORBANCES MEASUREMENT 12
--.--- ---- 00:00:00
CRLF
        1    2    3    4    5    6    7    8    9    10   11   12
CRLF
A     DATA DATA DATA DATA DATA DATA DATA DATA DATA DATA DATA DATA CRLF
B     DATA DATA DATA DATA DATA DATA DATA DATA DATA DATA DATA DATA CRLF
C     DATA DATA DATA DATA DATA DATA DATA DATA DATA DATA DATA DATA CRLF
D     DATA DATA DATA DATA DATA DATA DATA DATA DATA DATA DATA DATA CRLF
E     DATA DATA DATA DATA DATA DATA DATA DATA DATA DATA DATA DATA CRLF
F     DATA DATA DATA DATA DATA DATA DATA DATA DATA DATA DATA DATA CRLF
G     DATA DATA DATA DATA DATA DATA DATA DATA DATA DATA DATA DATA CRLF
H     DATA DATA DATA DATA DATA DATA DATA DATA DATA DATA DATA DATA CRLF
CRLF
CRLF
CRLF
EOF
```

Were EOF is end mark, decimal 26.

WP is acknowledged by all 20 sets of agglutination measurement results without titles:

```
DATA DATA DATA DATA DATA DATA DATA DATA DATA DATA DATA DATA CRLF
DATA DATA DATA DATA DATA DATA DATA DATA DATA DATA DATA DATA CRLF
DATA DATA DATA DATA DATA DATA DATA DATA DATA DATA DATA DATA CRLF
DATA DATA DATA DATA DATA DATA DATA DATA DATA DATA DATA DATA CRLF
DATA DATA DATA DATA DATA DATA DATA DATA DATA DATA DATA DATA CRLF
DATA DATA DATA DATA DATA DATA DATA DATA DATA DATA DATA DATA CRLF
DATA DATA DATA DATA DATA DATA DATA DATA DATA DATA DATA DATA CRLF
DATA DATA DATA DATA DATA DATA DATA DATA DATA DATA DATA DATA CRLF

DATA DATA DATA DATA DATA DATA DATA DATA DATA DATA DATA DATA CRLF
DATA DATA DATA DATA DATA DATA DATA DATA DATA DATA DATA DATA CRLF
DATA DATA DATA DATA DATA DATA DATA DATA DATA DATA DATA DATA CRLF
DATA DATA DATA DATA DATA DATA DATA DATA DATA DATA DATA DATA CRLF
DATA DATA DATA DATA DATA DATA DATA DATA DATA DATA DATA DATA CRLF
DATA DATA DATA DATA DATA DATA DATA DATA DATA DATA DATA DATA CRLF
DATA DATA DATA DATA DATA DATA DATA DATA DATA DATA DATA DATA CRLF
DATA DATA DATA DATA DATA DATA DATA DATA DATA DATA DATA DATA CRLF


DATA DATA DATA DATA DATA DATA DATA DATA DATA DATA DATA DATA CRLF
DATA DATA DATA DATA DATA DATA DATA DATA DATA DATA DATA DATA CRLF
DATA DATA DATA DATA DATA DATA DATA DATA DATA DATA DATA DATA CRLF
DATA DATA DATA DATA DATA DATA DATA DATA DATA DATA DATA DATA CRLF
DATA DATA DATA DATA DATA DATA DATA DATA DATA DATA DATA DATA CRLF
DATA DATA DATA DATA DATA DATA DATA DATA DATA DATA DATA DATA CRLF
DATA DATA DATA DATA DATA DATA DATA DATA DATA DATA DATA DATA CRLF
DATA DATA DATA DATA DATA DATA DATA DATA DATA DATA DATA DATA CRLF
```

V command sends the following type of text:

```
Multiskan RC V1.0-1A
```

T command sends the following text:

```
--, --- -----  00:00:00
```

STATUS command sends the report:

```
Multiskan RC status report --, --- -----  00:00:00.

Filter: 2
Chopper speed [rpm]: 1464
Lamp intensity:  3 / 3
Gains:  0 0 0 0 0 0 0 0 / 7 7 7 7 7 7 7 7
Bottom values:  001280 001440 001344 001312 001408 001376 001408 001376
Blank values:   088864 070304 098112 080896 076176 087280 093104 095680
```

This command is for service use only

3.4 Error Messages

ER3	Command error
ER4	Invalid program module
ER5	Chopper speed too high
ER6	Filter not installed in filterwheel
ER7	Filter timeout
ER8	Filter out of position tolerance
ER9	Not enough light
ER10	Too much light
ER11	Pinhole plate operation failure
ER12	Filter not able to agglutination
ER13	Lamp failure
ER14	Chopper speed too low
ER15	Plate stepper timeout
ER16	Plate position error

4. SERVICING

4.1 Maintenance

To guarantee the continuing reliability and accuracy of Multiskan RC avoid disturbing any of the optical system components. A misalignment of the light path affects measurements.

Keep the optical system clean to ensure proper functioning and accurate results. Prevent any liquid from entering the instrument. Keep the instrument free of dust and other foreign matter. Avoid touching lens surfaces, filters or detectors with fingers.

4.2 Routine Cleaning of the Instrument

Turn the power off and unplug the instrument.

Use disposable gloves.

Clean the instrument outside, the track (Fig.11:1) and the plate carrier (Fig.11:2) with a cloth dampened with water or mild detergent.

4.3 Cleaning of the Optical System

Remove the two retaining screws (Fig.11:3, 11:4) of the measuring assembly cover and remove the cover. Clean the track (Fig. 11:5) inside the measuring assembly as above.

NOTE: **Do not touch the measuring circuit board (Fig. 11:6) by hand.**

Clean the eight focusing lenses at the end of the optical fibre bundle (Fig. 11:7) with a cloth dampened with water, mild detergent or 96 % ethanol. If 96 % ethanol is used, wipe afterwards with a napless cloth dampened with water. The upper lenses are situated under the detector frame (Fig.11:8). Remove the two detector frame from fasteners with washers (Fig. 11:9). Lift the detector frame from the handle (Fig. 12:1). Clean the upper lenses (Fig. 12:2) by the same way as focusing lenses.

NOTE: **Do not use acetone to clean the plastic lenses (focusing lenses or upper lenses). Avoid harsh treatment.**

After cleaning the upper lenses lower the detector frame back to it´s position.

NOTE: **Make sure that the Hall-element sensor (Fig. 12:3) is positioned into its slot (Fig.12:4).**

Replace the detector frame fasteners with washers (Fig. 11:9). Make sure that detector frame fasteners are placed so that the edge in the fastener faces up (see Fig. 11).

NOTE: **Do not bend the measuring circuit board cable (Fig. 11:10).**

Place the ground wire (Fig. 11:11) back to its position making sure that the ground wire will stay in its place. Replace the cover retaining screws. The screw (Fig. 11:3) will connect the measuring assembly cover to the instrument ground to suppress electrical disturbances.

Clean the interference filters with napless cloth or with lense paper. It is recommended not to use liquids when cleaning the filters.

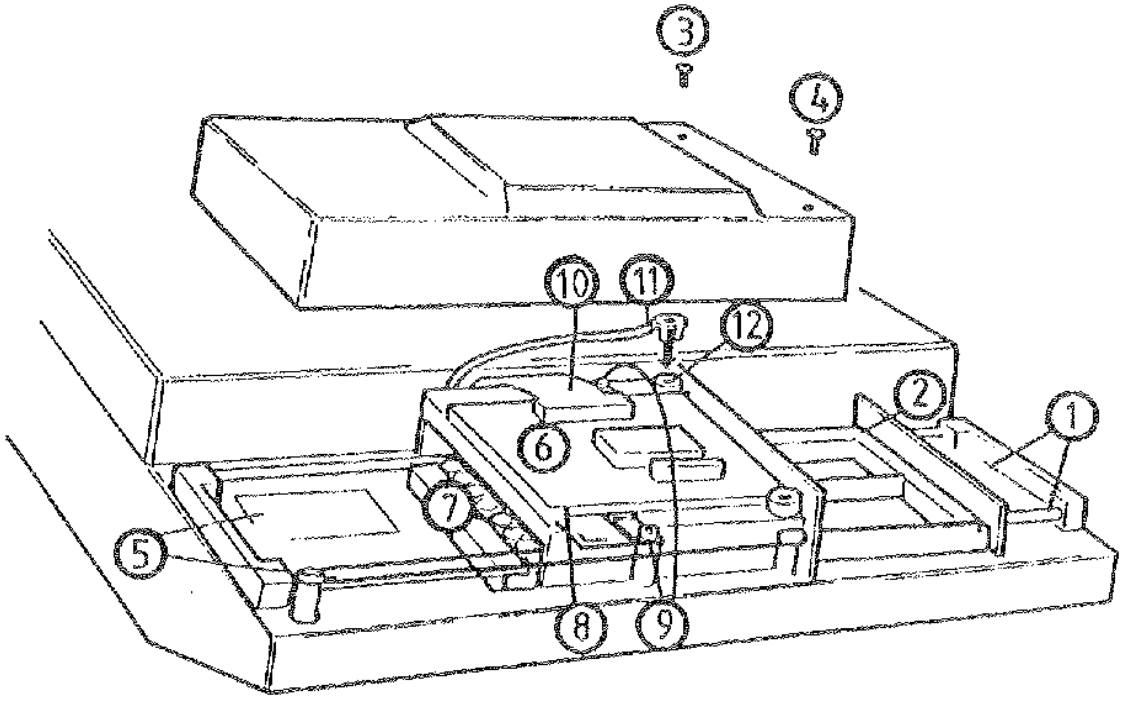

1. Track
2. Plate carrier
3. Retaining screw of the measuring assembly cover
4. Retaining screw of the measuring assembly cover
5. Track
6. Measuring circuit board
7. Focusing lenses
8. Detector frame
9. Detector frame fastener with washer
10. Measuring circuit board cable
11. Ground wire
12. Position of the ground wire

Figure 11. Opening the measuring assembly cover

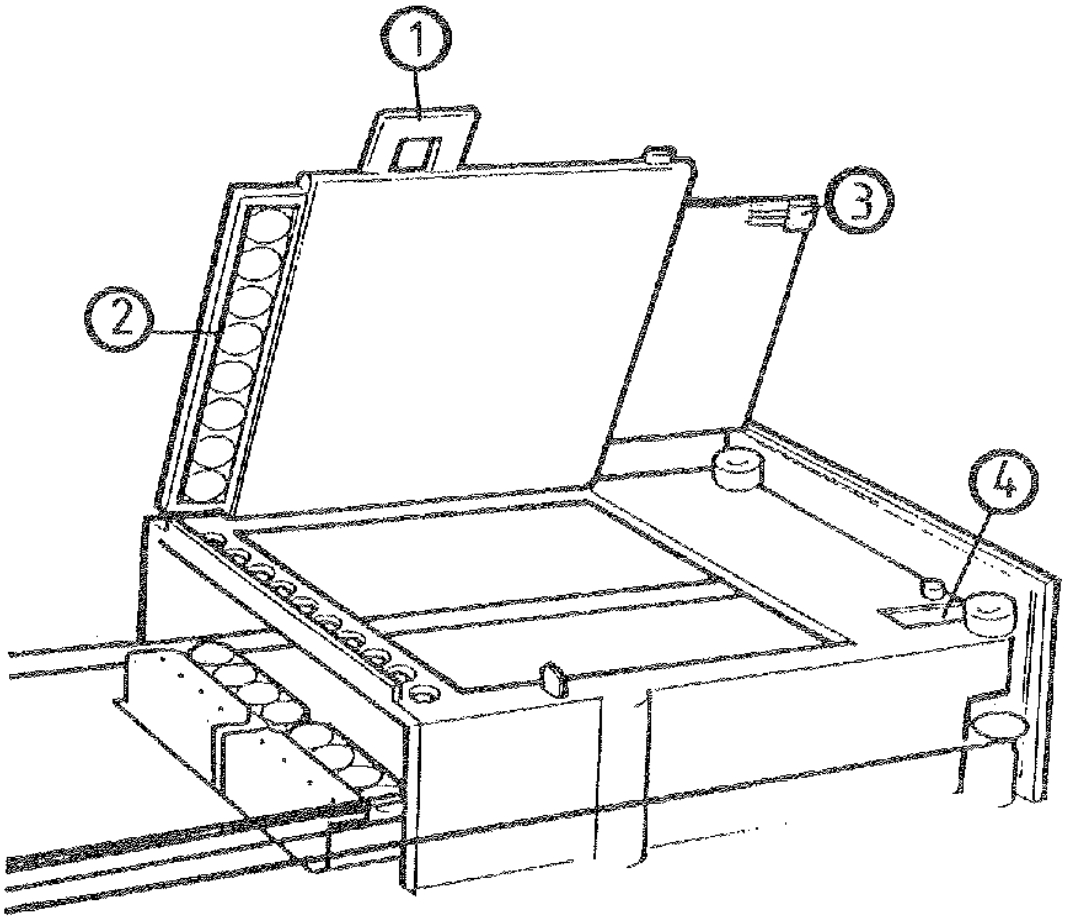

1. Handle
2. Upper lenses
3. Hall element sensor
4. Position of the Hall element sensor

Figure 12. Lifting the detector frame

4.4 Disinfection Procedure

Disinfect the instrument in case of hazard of infectious agents as follows:

Turn the power off and unplug the instrument.

Use disposable gloves.

Clean the instrument outside, the track (Fig. 11:1) and the plate carrier (Fig.11:2) with a disposable cloth dampened either with 70 % ethanol or 1 % glutaraldehyde.

Remove the two screws (Fig. 11:3, 11:4) of the measuring assembly cover and remove the cover. Clean the track (Fig. 11.5) inside the measuring assembly and the eight focusing lenses at the end of the optical fibre bundle (Fig. 11:7) as above.

NOTE: **Do not touch the measuring circuit board (Fig. 11:6) by hand.**

The upper lenses are situated under the detector frame (Fig. 11:8). Remove the two detector frame fasteners with washers (Fig. 11:9). Lift the detector frame from the handle (Fig. 12:1). Clean the upper lenses (Fig.12:2) by the same way as focusing lenses.

NOTE: **Do not use acetone to clean the plastic lenses (focusing lenses or upper lenses). Avoid harsh treatment.**

Let the surfaces of the instrument to dry.

Wipe out the thin film of the disinfection agent from the surface of eight focusing lenses and upper lenses with a napless lens tissue dampened with water. Dry the lenses with a dry lens tissue.

After drying the upper lenses lower the detector frame back to its position,

NOTE: **Make sure that the Hall-element sensor (Fig. 12:3) is positioned into its slot (Fig.11).**

Replace the detector frame fasteners with washers (Fig. 11:9). Make sure that detector frame fasteners are placed so that the edge in the fastener faces up (see Fig. 11)

NOTE: **Do not bend the measuring circuit board cable (Fig. 11:10).**

Place the ground wire (Fig.11:11) Back to its position (Fig. 11:12). Slide the measuring assembly cover to its position making sure that the ground wire will stay in its place. Replace the cover retaining screws. The screw (Fig.11:3) will connect the measuring assembly cover to the instrument ground to suppress electrical disturbances.

Please note that this procedure can not be a guarantee against contamination of personnel handling the instrument.

4.5 Changing Individual Filters in the Filterwheel

Switch the power off.
Unscrew the two cover retaining screws and lift the cover.
Lift the filter wheel from the filter wheel slot. Do not touch filter surfaces.
Remove the filter spring by unscrewing the spring position holding screw.
Insert a new filter into the wheel so that the arrow on the filter rim points downwards.
Place the filter spring into its original position and fasten the screw.
Slide the filter wheel back into the filter wheel slot with the toothed edge facing towards the rear of the instrument.
The filter wheel is drawn into position by the central permanent magnet.
Close the instrument cover and replace the retaining screws.

4.6 Changing the Lamp

If the lamp burns out, replace it as follows.

Turn the power off and unplug the instrument. Open the instrument cover by unscrewing the two screws on each side of the instrument and lift up the cover.

NOTE: **The lamp and its surroundings may be hot.**

Lift up the lamp with the terminal socket. Pull the terminal socket from the lamp contacts (see Fig. 13).

Do not touch the reflective surface of the new lamp or the bulb itself.

Refit the terminal socket to the contacts of the new lamp approved by the manufacturer (OSRAM 64607, 8V/50 W). Place the new lamp in its place.

Close the instrument cover and replace the retaining screws. Plug in the instrument and switch the power on.

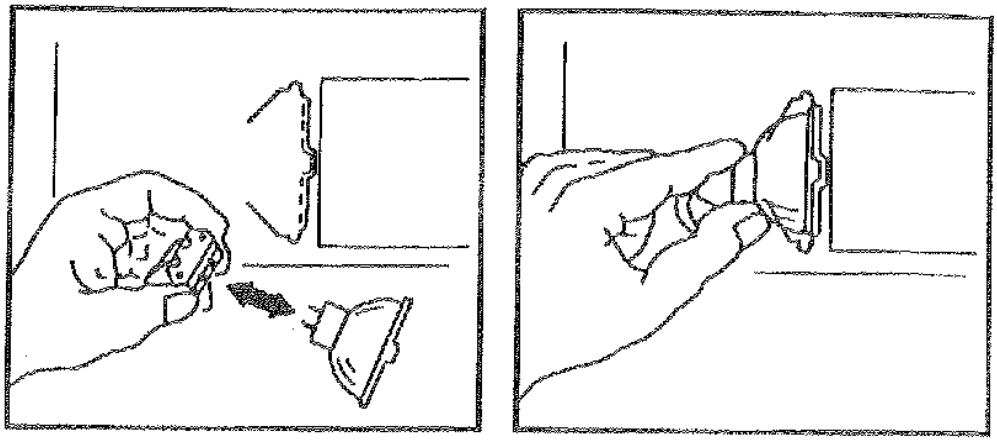

Figure 13. Changing the lamp

4.7 Changing the Fuses

The fuses are located at the rear of the instrument (Fig. 8:3).

Switch the power off.

Unplug the instrument and disconnect the power cord from the power input socket.

Unscrew the caps of the fuse holders (Fig. 14).

Replace the blown fuses with the same type.

Screw the caps back onto the fuse holders.

Reconnect the power cord and switch the power on.

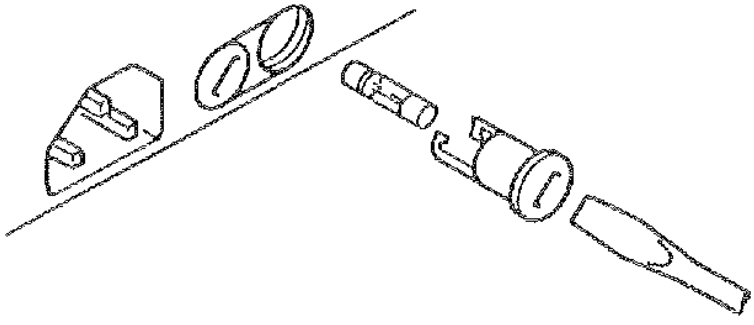

Figure 14. Changing the fuses

5. TROUBLE-SHOOTING

ERROR	REASON	RECOMMENDED ACTION
No power when switched on.		Check that the instrument is plugged in. Check that the fuses are not blown.
Unsuccessful transfer of data via the interface system.		Check that the instrument baud rate matches that of the computer. Check that the both instruments have the same character length and parity configuration. Check that both instruments use the same kind of handshake. Check the connection cable.
PLATE ERRORS		Check that the plate is properly positioned in the plate carrier. Check that no foreign matter is obstructing the carrier. Check that the rails are not dirty nor bent. Check that the toothed belt is not broken.
FILTER ERRORS	Filter wheel is missing or faulty.	Place the filterwheel into the filterwheel slot. Check that the filter wheel has been properly installed or is not broken.
TOO MUCH LIGHT	Too much light enters the detectors.	Check the filter. Contact service.
NO LIGHT, LAMP FAILURE	Lamp has burn out.	Change the lamp.
CHOPPER ERRORS		Check the chopperwheel. Contact service.
PINHOLE PLATE ERROR		Check the pinhole plate. Contact service.

6. GENERAL SPECIFICATIONS

Weight:	Basic unit 11 kg
Overall dimensions:	125 mm (H) x 420 mm (W) x 320 mm (D)
Mains power supply:	100 - 120 V, 50/60 Hz, nominal (operating range 90...136 V) 200 - 240 V, 50/60 Hz, nominal (operating range 180...256 V) Automatic range selection
Power consumption:	170 VA max
Fuses:	2 x 3.5 A, slow-blow type UL198G Time Delay, 5x20 mm
Operating conditions: (indoor use)	+10°C to +40°C, RH 90 % max Tested according to IEC 68-2-1, test Ab, (Cold), IEC 68-2-2, test Bb, (Dry heat) and IEC 68-2-3, test Ca, (Damp heat)
Transportation conditions:	-40°C to +70°C, packed in transportation package Tested according to IEC 68-2-1, test Ab, (Cold) and IEC 68-2-2, test Bb, (Dry heat)
Storage conditions:	-25°C to +50°C, packed in transportation package Tested according to IEC 68-2-1, test Ab, (Cold) and IEC 68-2-2, test Bb, (Dry heat)
Microplates:	The manufacturer recommends the use of flat-bottomed microplates. (Specifications are set for flat-bottomed microplates).
Spectral range:	400 – 750 nm (optional 340 – 750 nm), 8 filter slots in a filterwheel.
Read-out range:	Min 0 – 3.5 abs. units
Measurement range:	0 – 2.000 abs. units
Accuracy:	± 2.0 % or ± 0.007 abs. units whichever is greater
Precision:	CV < 0.5 % or within 0.007 abs.units
Linearity:	± 2.0 % or ± 0.007 abs.units whichever is greater
Long term stability:	Because of the autoblanking procedure the instrument is stable
Speed of operation	
warm up time:	1 minute
reading speed:	5 s/plate (continuous mode) 10 s/plate (step mode)
Display:	3 colour LED
Interface:	RS-232C serial interface baud rate: 2400 or 9600 (9600 set by the manufacturer) character format: 1 start bit, 8 data bits, 1 stop bit and no parity
Optical system:	Quartz tungsten halogen lamp (Osram 64607, 8V/50W), chopper wheel, aperture and condenser lens, semitransparent mirror, interference filter (in filterwheel), fibre bundle, focusing lenses, upper lenses and detectors
Interference filters:	Max. 8 selectable filters in a filterwheel in range 400 – 750 nm (optional range 340 – 750 nm). Half band width 6 – 9 nm, center wavelength accuracy ±2.0 nm (filters 340 – 413 nm). Half band width 3 – 6 nm, center wavelength accuracy ±2.0 nm (filters 414 – 750 nm).
Operating mode:	Computer control mode

7. SAFETY SPECIFICATIONS

Multiskan RC fulfils the following requirements:	IEC 1010-1 including Amendments 1 and 2 CSA C22.2 No 1010.1 (file LR 62464-C)

The safety specifications are met also under the following enviromental conditions in addition or in excess to those stated in the operating conditions:

Altitude:	up to 2000 m
Temperature:	+5°C - +40°C
Mains supply fluctuations:	±10 %
Installation category (overvoltage category):	II according to IEC 664-1 (Note 1)
Pollution degree:	2 according to IEC 664-1 (Note 2)

NOTE 1 Installation category (overvoltage category) defines the level of transient overvoltage which the instrument is designed to withstand safely. It depends on the nature of the electricity supply and its overvoltage protection means. For example in CAT II which is the category used for instruments in installations supplied from supply comparable to public mains such as hospital and research laboratories and most industrial laboratories the expected transient overvoltage is 2500 V for a 230 V supply and 1500 V for a 120 V supply.

NOTE 2 Pollution degree describes the amount of conductive pollution present in the operating environment. Pollution degree 2 assumes that normally only non-conductive pollution such as dust occurs with the exception of occasional conductivity caused by condensation.

Both of these affect the dimensioning of the electrical insulation within the instrument.

CONFORMANCE TO THE EU DIRECTIVES

Multiskan RC bearing the CE mark conforms to the following EU directives	89/336/EEC (as amended by 92/31/EEC) relating to Electromagnetic Compability 73/23/EEC (Low Voltage Directive)	
Performance specifications used to verify conformance to the Directives above	EN 55022	class B
	IEC 1000-4-3/EN 61000-4-3	3 V/m
	IEC 1000-4-2/EN 61000-4-2	4 kV CD, 8 kV AD
	IEC 1000-4-4/EN 61000-4-4	1 kV
	IEC 1010-1/EN 61010-1 Including Amendments 1 and 2	

Brief Operating Instructions

Unpack the instrument.

Install the filter wheel.

Install the lamp.

Check the baud rate and handshake with DIL-switches.

Connect computer.

Plug into mains.

Switch the instrument on.

Start your computer program.

Interface System

Data transfer to a computer occur via a built-in serial RS-232C interface.

The hardware specifications of the RS-232C interface are as follows:

1. The configuration is specified as for data terminal equipment (DTE).
2. The baud rate (speed at which data is sent between an external computer and the instrument) is selected by the DIL switches on the MUSCU–RC processor board. The following baud rates are available: 2400 and 9600. The baud rate 9600 is set by the manufacturer.
3. Character format is 10 bits with 1 start bit, 8 data bits, 1 stop bit and no parity. The format cannot be changed.
4. XON/XOFF software flow control can be used. RTS/CTS handshake can be used if necessary. The desired alternative is selected by a DIL switch on the MUSCU–RC processor board.

Signals Connected to the DB-25 Connector

The following signals are connected to the DB-25 connector at the rear of the instrument:

RS-232C PORT DB-25 MALE CONNECTOR	
PIN NO	SIGNAL NAME
2	TxD
3	RxD
4	RTS
5	CTS
7	GND
20	DTR

Signal description:

2. TxD, Transmit Data output
3. RxD, Receive Data input
4. RTS, Request to send output
5. CTS, Clear to send input
7. GND, Signal ground
20. DTR, Data Terminal Ready. DTR is in the high state when Multiskan RC is powered up.

Baud Rate Selection

The baud rate (speed at which data is sent between Multiskan RC and the computer) is selected by the DIL switch 3 (Fig. 7).

sw 3	Baud rate
off	9600
on	2400

To determine which baud rate is necessary for any given computer/printer:

1. Consult the operating manual supplied with the computer
2. Contact the dealer from which the computer was purchased
3. Contact the computer manufacturer.

Handshake Selection

Switches sw2 and sw1 select the data flow control mode

sw2	sw1	
off	off	no flow control (factory setting)
off	on	RTS/CTS hardware flow control (handshaking)
on	off	XON/XOFF software flow control
on	on	both RTS/CTS and XON/XOFF flow controls

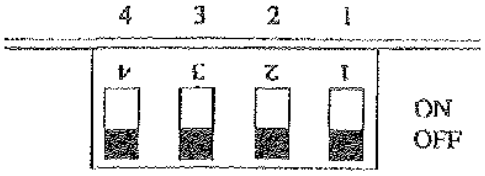

DIL SWITCHES

Note: See marks on the switch component. ON/OFF positions may be changed depending on the component used.

Typical Computer Connection Cables

Multiskan RC - PC

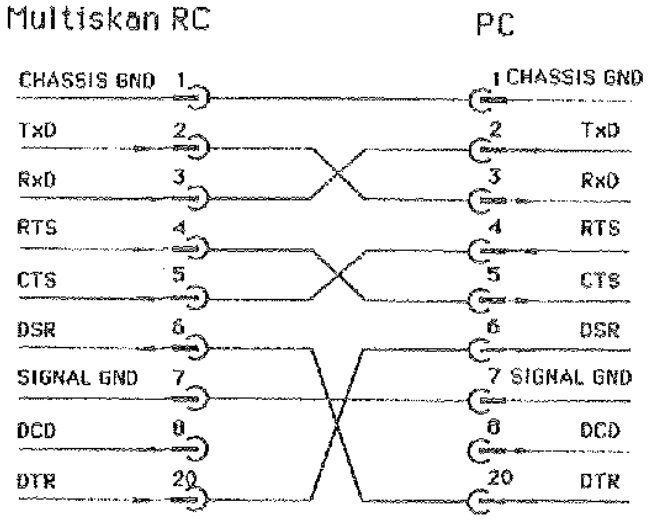

Multiskan RC - MAC

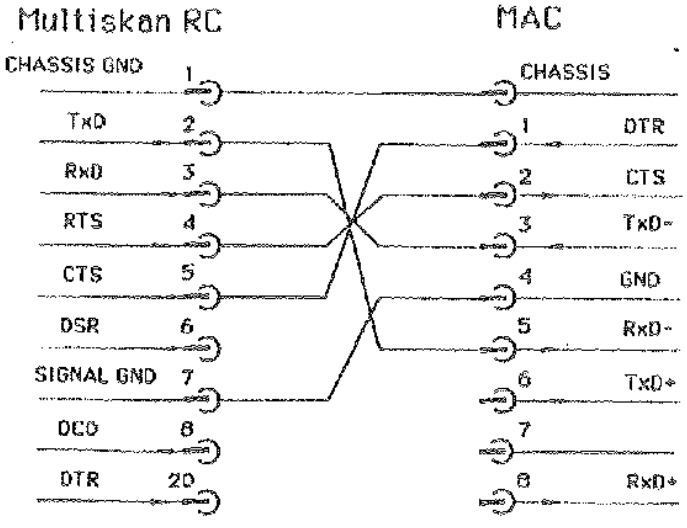

Ordering Information and Address

Accessories	Labsystems code
Filterwheel without filters	24071230
Other filters in the 400 – 750 nm (340 – 750 nm) range can be ordered (XXX corresponds to the wavelength)	142xxx0
Filter spring and screw	2402510
Filter box	1041980
Operation manual	1506250
Dust cover	1610450
Serial interface cable for PC	2303890
Serial interface cable for MAC	2303770

Spares for maintenance	
Lamp	2400620
Fuse 3.5 A (10 pcs/box)	1210950

LABSYSTEMS OY
(Head office)
Sorvaajankatu 15
P.O. Box 8
FIN-00881 Helsinki
FINLAND
Tel: +358-9-329 100
Telefax: +358-9-3291 0415

Labsystems

... because science needs standards

Manufactured by

Labsystems Oy
P.O. Box 8
FIN-00881 Helsinki, Finland
Tel. +358-9-329 100
Telefax +358-9-3291 0415

Distributed by

LABSYSTEMS

Multiskan MS

Version 8.0

Operation Manual

LABSYSTEMS
14.1.1997

Cat. no 1506260

LABSYSTEMS MULTISKAN MS (type 352)

OPERATION MANUAL

CONTENTS

SAFETY SYMBOLS USED IN MULTISKAN MS

Power ON

Power OFF

WARNING MARKINGS USED IN THE DOCUMENTATION

Caution, risk of personal injury to the operator or a safety hazard for the surrounding area.

Caution, risk of damage to the instrument, other equipment or loss of performance or function in a specific application.

1. INSTALLATION

1.1 Unpacking

Unpack Multiskan® MS carefully and check for any damage that may have been caused during transportation. If any part is damaged or missing, contact the local Labsystems representative.

Keep the original package for future transportation.

1.2 Environmental Requirements

Locate Multiskan MS to avoid exposure to excess dust, vibrations, strong magnetic fields, direct sunlight, draft, excessive moisture or large temperature fluctuations.

Leave sufficient clearance (10 cm) at both sides of the unit for adequate air circulation.

1.3 Installation

Remove the two cover retaining screws (Fig.1:2) and lift up the cover.

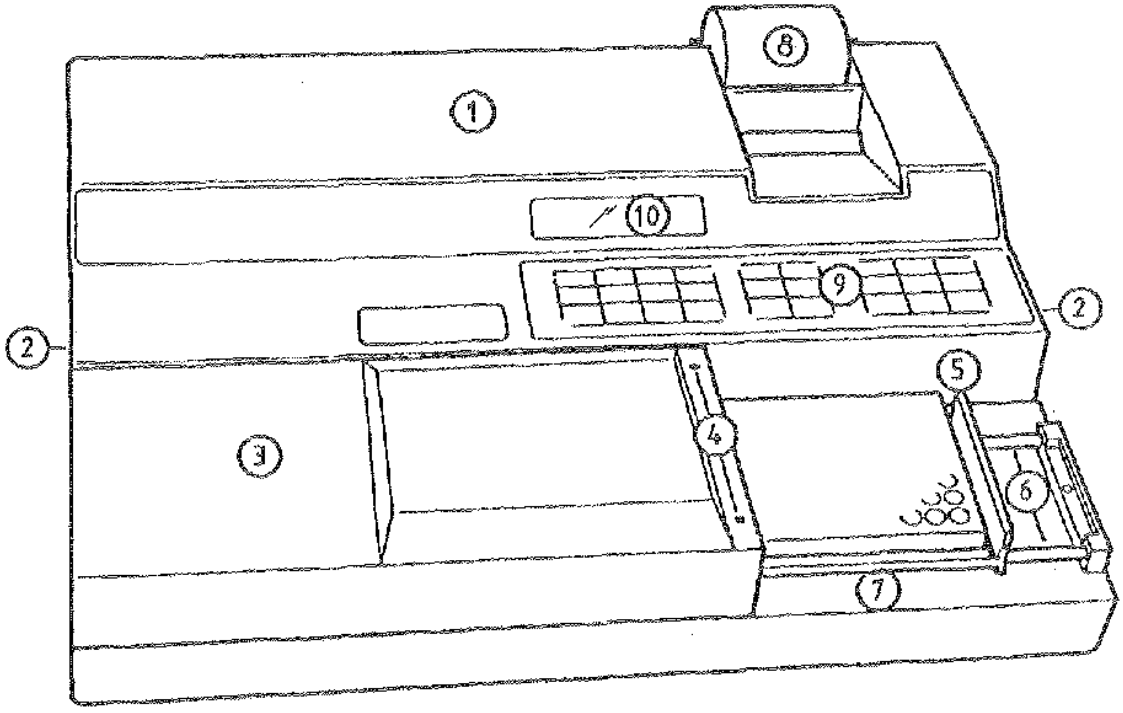

1. Instrument cover
2. Retaining screws of the instrument cover
3. Measuring assembly cover
4. Retaining screws of the measuring assembly cover
5. Plate carrier
6. Transfer rails
7. Track
8. Printer (option)
9. Keypad
10. Display

Figure 1. Multiskan MS

Unpack the filter wheel. Check that all filters are clean and undamaged. Place the wheel into the filter slot (Fig. 2:5) so that the toothed edge faces the rear of the instrument. A magnetic locking mechanism will automatically lock the wheel in the correct position and the optical filter position sensor will make sure that the correct filter is used during measurement.

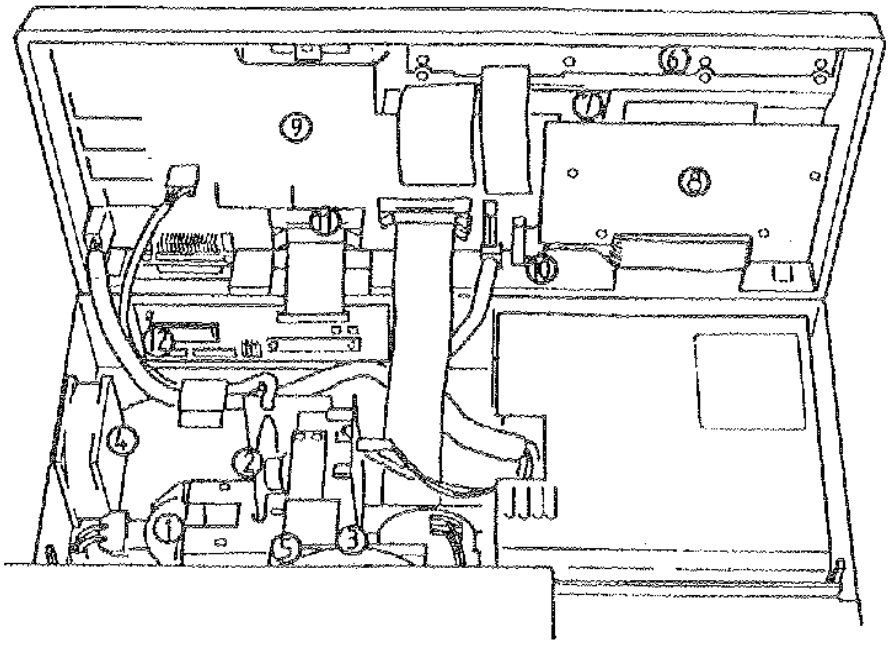

1. Lamp
2. Chopper
3. Filter
4. Fan
5. Filter wheel slot
6. NAPSU2 (keyboard) circuit board
7. LSD display circuit board
8. SCANPRI2 (printer) circuit board (option)
9. MUSCU/2A processor circuit board
10. Connector for built-in printer
11. Connector for Centronics interface, optional RS-232C interface or optional IEEE-488 interface
12. MUCEN circuit board

Figure 2. Multiskan MS internal view

Unpack the lamp. Fit the lamp contacts to the terminal socket inside the instrument (Fig.3).
Do not touch the reflective surface of the lamp or the bulb itself.
Place the lamp in its place (Fig. 2:1).

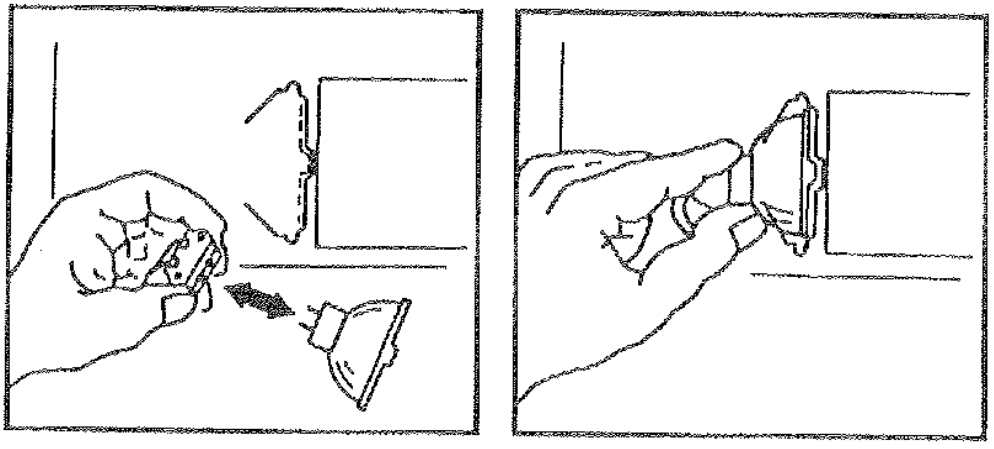

Figure 3. Installation of lamp

Check visually that there are no loose parts inside the instrument.

Close the instrument cover and replace the retaining screws.

Multiskan MS does not produce operating noise at a level which could cause a hazard. No sound level measurements are needed after installation.

Connect the mains supply cord to the mains power socket (Fig. 4:2). The power supply has automatic 100-120/ 200-240 VAC range selection. If a suitable mains supply cord is not provided, use only cords certified by the local authorities.

Connect the instrument to a correctly installed line power outlet which has a protective conductor also called as earth or ground.

CAUTION: **Interruption of the protective conductor inside or outside the instrument or disconnection of the protective conductor terminal may make the instrument dangerous.**

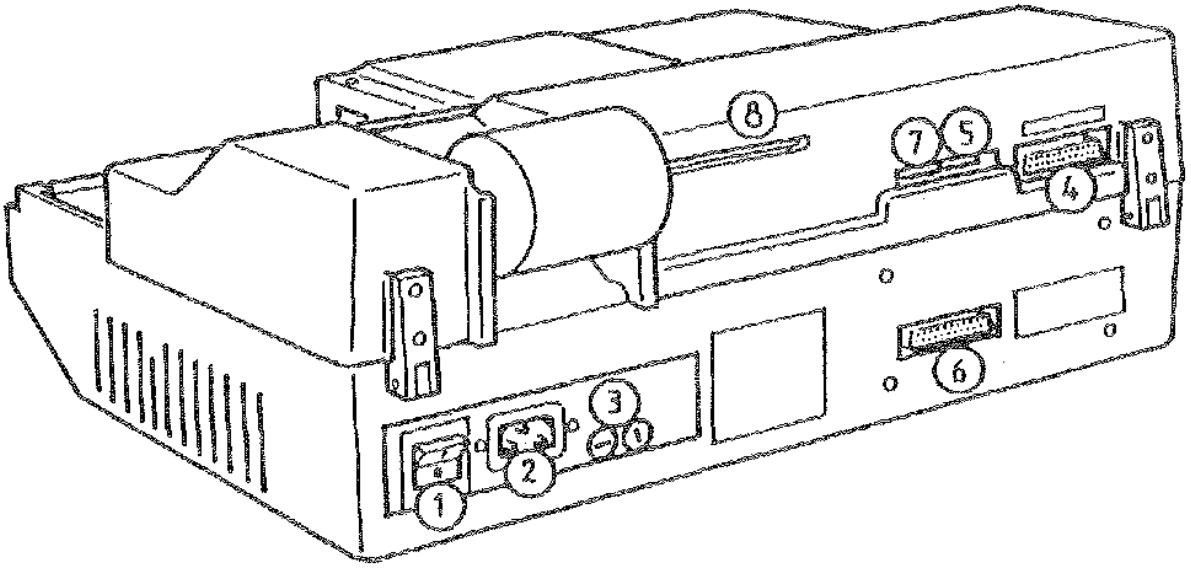

1. Power switch
2. Mains power socket
3. Fuses
4. RS-232C interface connector for a computer and a printer
5. Serial RS-232C DIL switches
6. Centronics interface connector
7. Secondary interface DIL switches
8. Slot for program card

Figure 4. Multiskan MS rear view

Connect computer or printer, if needed, according to requirements. For instructions about the interface system, see Appendix 2.

1.4 Transporting for Service

Repack the instrument according to instructions enclosed in the package. Use the original package. Indicate the fault. Inform about the use of hazardous materials.

2. FUNCTIONAL DESCRIPTION

2.1 Introduction

Multiskan MS is an eight-channel vertical light path filter photometer designed to perform both standard photometric and agglutination measurements.

There is a versatile built-in software available in Multiskan MS. It comprises several software packages (program modules). Each package is a combination of measurement and calculation modes.

Extended memory capacity is achieved by programmable program card.

The wavelength (400 - 750 nm or optional 340 - 750 nm) is selected using maximum eight high quality interference filters held in a filter wheel.

The readings can be processed via a serial RS-232C interface or via a parallel Centronics type printer interface. The optional built-in thermal printer provides also a record of the results.

2.2 Measurement Principle

2.2.1 Photometric Measurements

Multiskan MS utilizes the original Labsystems' concept of vertical photometry in which the light beam passes through the whole sample.

In vertical photometry, the absorption of light is proportional to the amount of light absorbing substance in the well.

Absorption is expressed by the following equation:

$$A = \frac{a}{S} m,$$

where A = absorbance, a = molar absorptivity of the substance, m = mass of absorbing substance and S = cross-sectional area perpendicular to the light path.

The advantages of the vertical light path measurement are:

(1) inaccurate pipetting of nonabsorbing liquids does not affect the measured absorbance values

(2) evaporation of nonabsorbing liquids during the reaction does not affect the measured absorbance values and

(3) a certain degree of inhomogeneity in the solution, for example as a result of layering in turbidity measurements, does not affect the results.

The optical system comprises the following components (Fig. 5a):

1 quartz-halogen lamp
2 chopper wheel
3 aperture and condenser lens
4 semi-transparent mirror
5 aperture
6 interference filter (filter wheel)
7 optical fibre bundle
8 focusing lenses
9 upper lenses and detectors

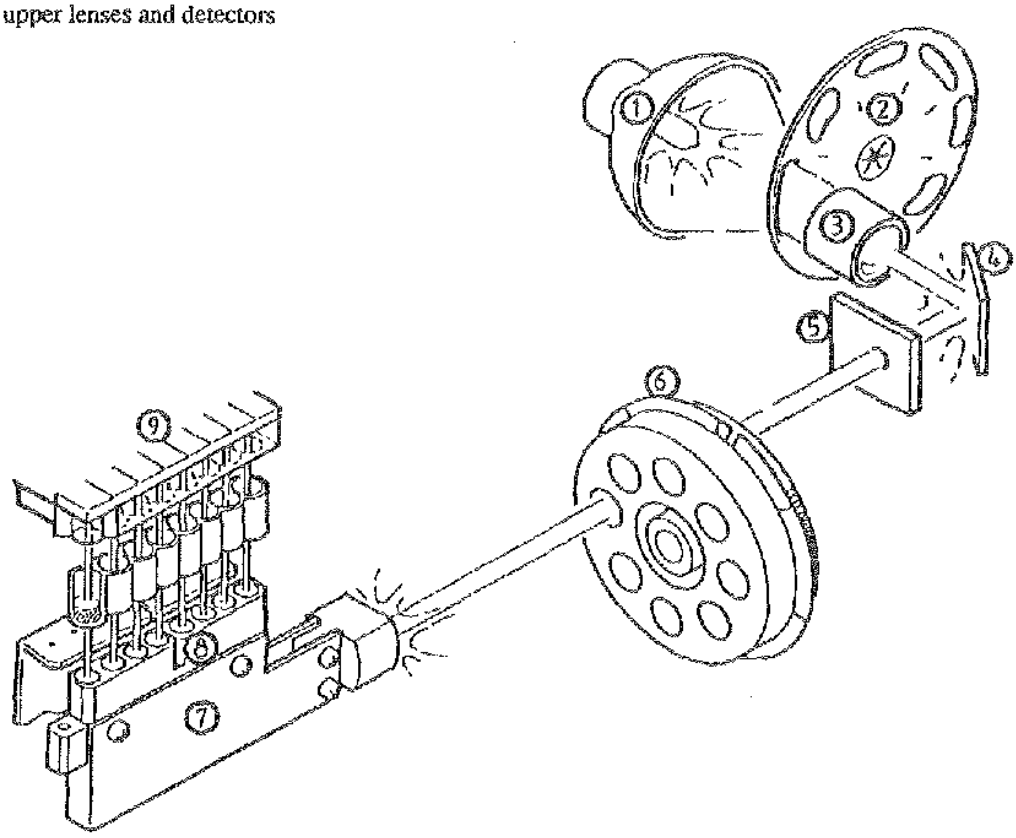

Figure 5a. Optical system

Light source:

The light source is a quarz-halogen lamp (Osram 64607, 8V/50W), which is equipped with an aluminium-coated elliptical reflector.

To prolong the service life of the lamp, the instrument should be switched off when not in use. Warming-up period of 1 minute has to be allowed before measuring.

Chopper wheel:

The chopper wheel chops the light beam to minimize electronic noise.

Semi-transparent mirror:

After passing through the condenser lens the light beam impinges on the semi-transparent mirror. Part of the visible light and all longer wavelengths pass through the mirror, and the UV and the rest of the visible light is reflected. This arrangement eliminates heating of the interference filter and evens out the spectral intensity distribution.

Interference filter:

The wavelength is selected from 1 - 8 filters held in the filter wheel.

Fibre bundle:

After passing through the interference filter, the light beam reaches the common end of the fibre bundle, which divides the beam into eight equal parallel beams and deflects the beams upwards.

Focusing lenses:

After being divided the light passes through a focusing system of eight lenses.

Detectors:

The light beams pass through the bottoms of the wells through the samples via upper lenses to the detectors, which measure the intensity of light.

2.2.2 Agglutination Measurements (optional)

Agglutination measurements are performed by using special optics (pinhole optics) (Fig. 5b). The instrument scans over each well taking up to 20 readings. Readings are then down-loaded to a P.C. for further interpretation.

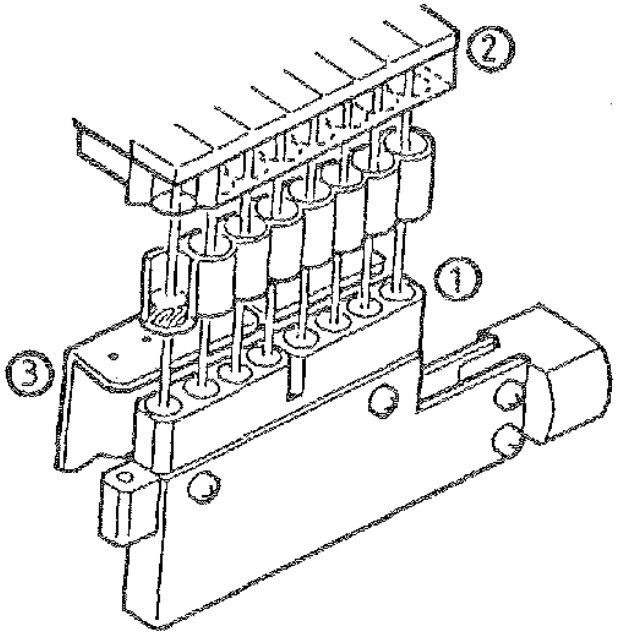

1. Focusing lenses
2. Upper lenses and detectors
3. Pinhole plate (optional)

Fig. 5b. Agglutination optics

2.3 Instrument Layout

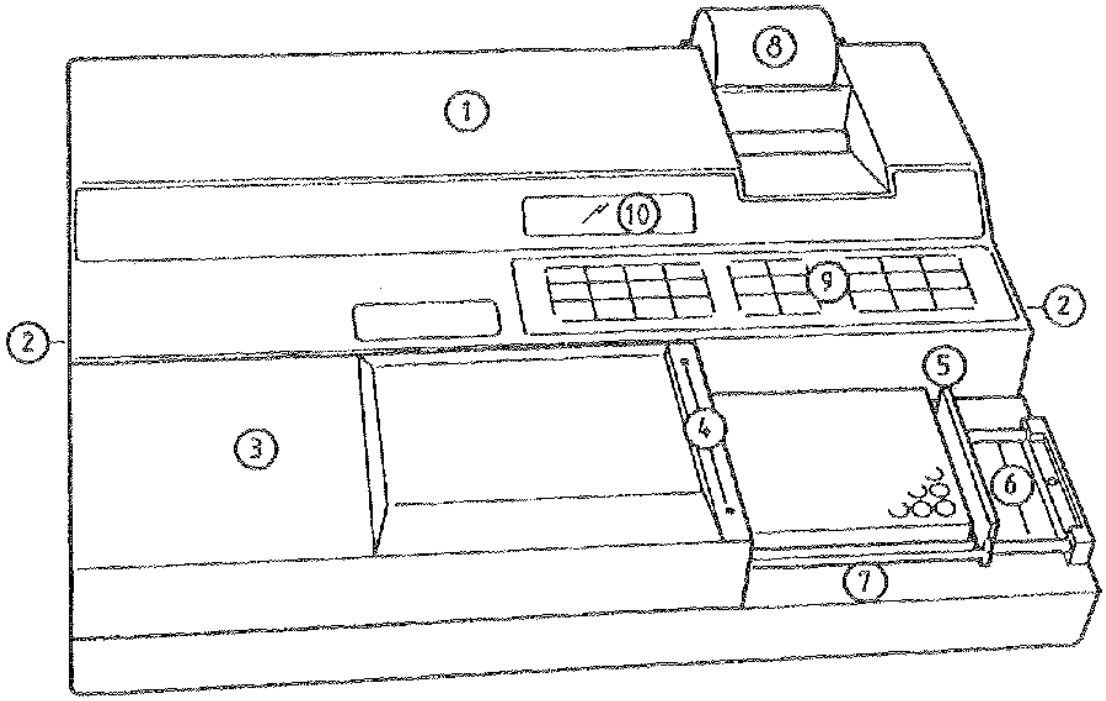

1. Instrument cover
2. Retaining screws of the instrument cover
3. Measuring assembly cover
4. Retaining screws of the measuring assembly cover
5. Plate carrier
6. Transfer rails
7. Track
8. Printer (optional)
9. Keypad
10. Display

Figure 6. Multiskan MS

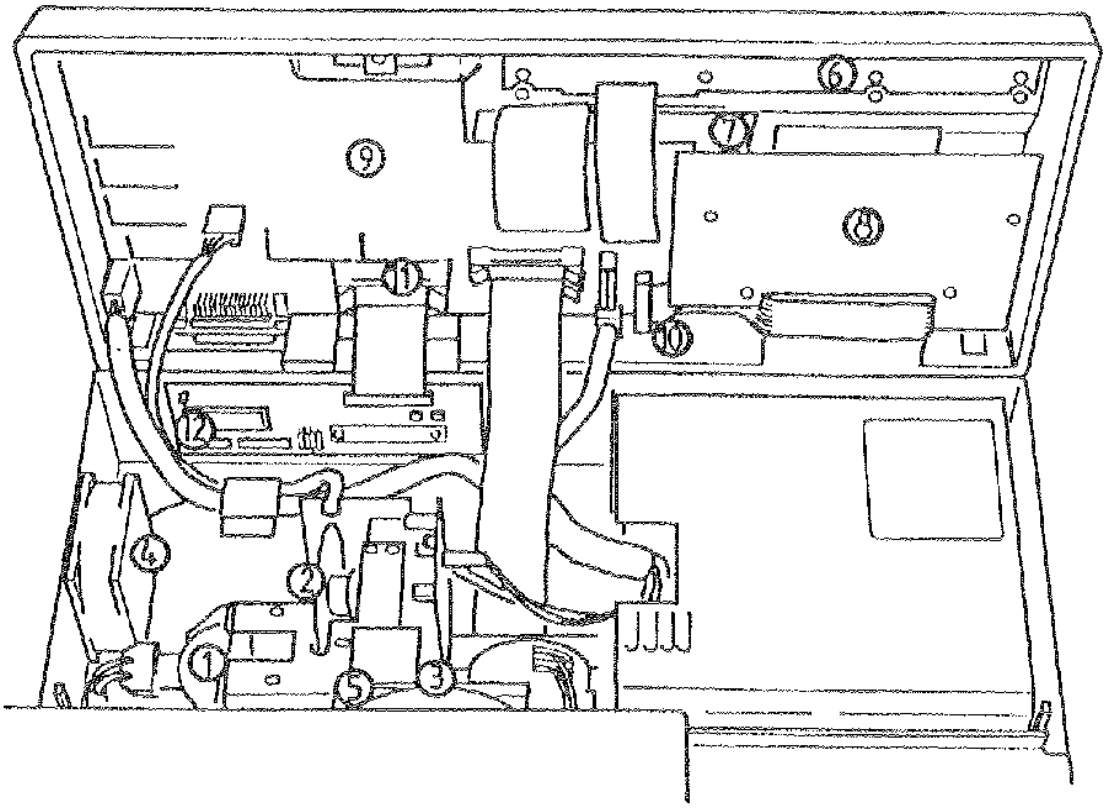

1. Lamp
2. Chopper wheel
3. Filter
4. Fan
5. Filter wheel slot
6. NAPSU 2 (keyboard) circuit board
7. LCD display circuit board
8. SCANPRI 2 (printer) circuit board (optional)
9. MUSCU 2A processor circuit board
10. Connector for built-in printer
11. Connector for Centronics interface, optional RS-232C interface or optional IEEE-488 interface
12. MUCEN circuit board

Figure 7. Multiskan MS internal view

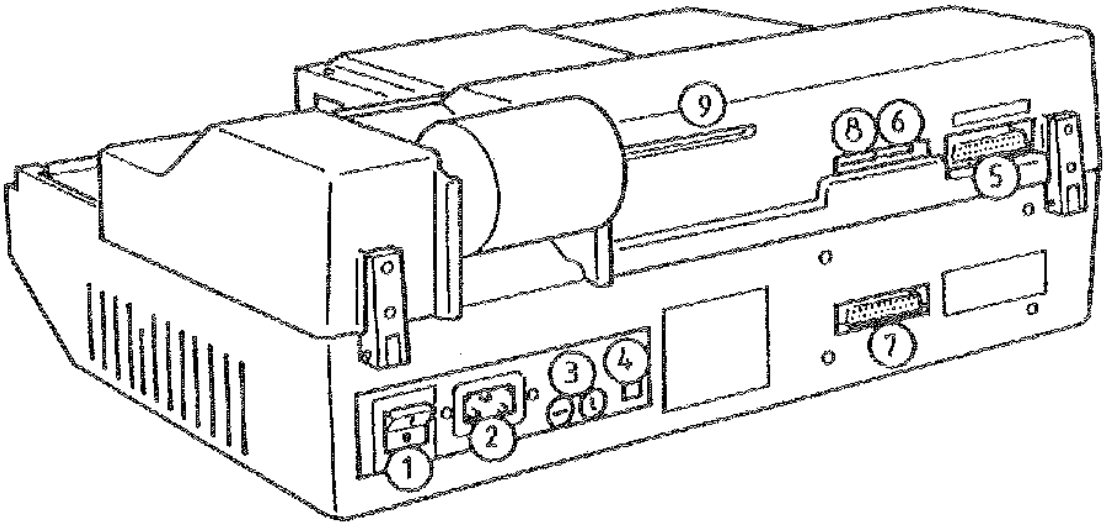

1. Power switch
2. Power input socket
3. Fuses
4. Voltage selector switch (if exist)
5. RS-232C interface connector for a computer or a printer
6. Serial RS-232C DIL switches
7. Centronics interface connector
8. Secondary interface DIL switches
9. Slot for program card

Figure 8. Multiskan MS rear view

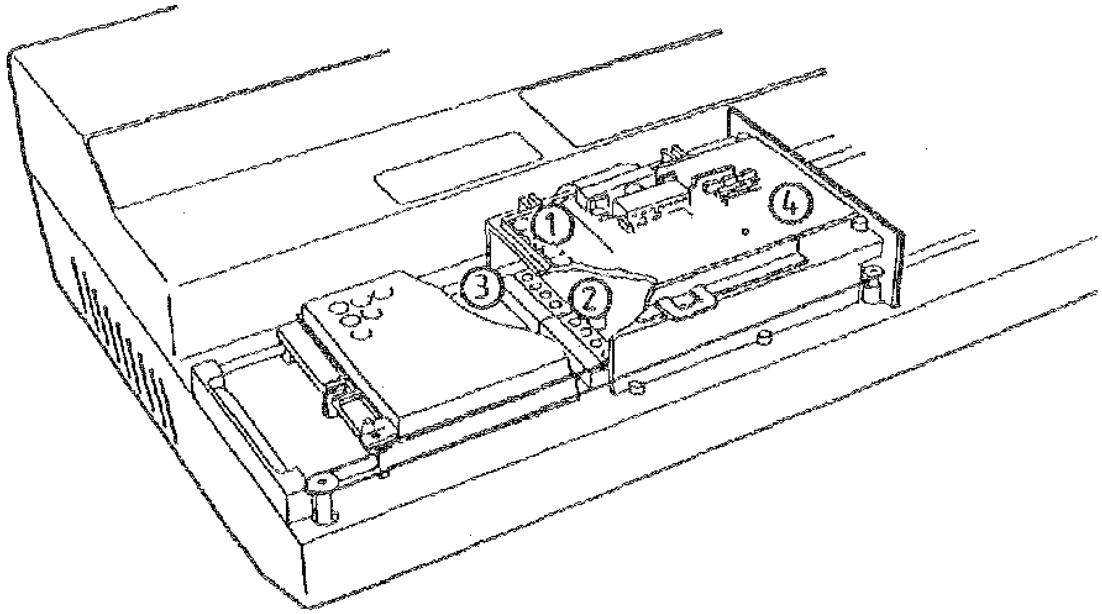

1. Detectors
2. Focusing lenses
3. Pin hole plate (optional)
4. MACU circuit board

Figure 9. Measuring assembly

2.4. Keypad

Keypad of Multiskan MS comprises 30 keys with click action switches:

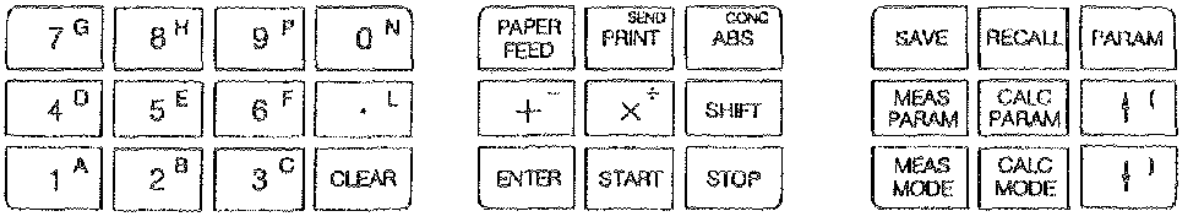

Figure 10. Multiskan MS keypad

0-9 A-H } :	for entering numeric values and microplate positions
P, N, L:	symbols of positive (P), negative (N) or low positive (L) controls to be used in cut off equation
. :	decimal point
CLEAR:	for correcting data before entering it
PRINT^{SEND}, ABS^{CONC}:	absorbances and concentrations are printed out on the built-in printer or sent out via the selected interface
PAPER FEED:	feeds paper from the roll of the built-in or external printer
+ - x /:	operators for cut off equation
SHIFT:	for taking symbols at the upper right corner of the key into use
ENTER:	for entering modes and parameters
START:	measurement is started
STOP:	microplate is ejected, instrument returns to the previous logical state
SAVE:	user determined programs can be stored into the memory of the instrument
RECALL:	programs earlier stored can be recalled
MEAS MODE:	measurement mode is selected
MEAS PARAM:	measurement parameters are entered
CALC MODE:	calculation mode is selected
CALC PARAM:	calculation parameters are entered
PARAM:	general parameters (e.g. RS-format, plate movement) are selected
↑ (:	arrow: for going backwards in the list of the modes or parameters and changing the clock display, parenthesis: for entering cut-off equation
↓) :	arrow: for going forwards in the list of the modes or parameters and changing the clock display, parenthesis: for entering cut-off equation

2.5 Program Modules

Multiskan MS software comprises program modules, software packages which are combinations of measurement and calculation modes.

The following program modules are available:

1. Primary EIA software
2. Agglutination software (optional)
3. Cut off software (optional)
4. Cubic spline software (optional)

Module 1: Primary EIA

This software is a basic software to perform EIA measurements. It includes the following measurement modes: absorbance, dual wavelength, two point, kinetic, multivawelength mode and computer control.

The following calculation modes can be selected: factor, linear standard, standard line, limit, double limit, range, column subtraction and point to point calculation.

Module 2: Agglutination software (optional)

This module enables agglutination measurements. A special optics (pinhole optics) is taken into use. 20 readings are taken per each well. Results are sent via interface for further processing.

Module 3: Cut off software (optional)

There are different cut off calculations available in this module: double limit, range, fixed cut off and floating cut off.

Module 4: Cubic spline (optional)

Measurement modes: available are absorbance, dual wavelength, two point and kinetic.
Calculation mode: available is cubic spline.

Changing between modules occurs by first pressing the SHIFT key and then the ENTER key.

2.6 Program Card (optional)

More memory capacity is offered by a programmable program card which can be plugged-in to the instrument.

Cards are programmed by Labsystems upon request.

3. OPERATION

3.1 How to Get Started

Switch the instrument on using the power switch at the rear of the instrument (Figure 8:1). Primary EIA, software version number and AUTOCALIBRATION are displayed followed by PRIMARY EIA, READY and the time. In autocalibration procedure the instrument selects the proper light intensity for each installed filter. When the instrument is switched on, wait 1 minute for warming up.

When switching the instrument on, module 1 and its parameters (single wavelength absorbance measurement, no calculation, filter n:o 1, continuous plate movement, plate analysis off and printer format) are selected.

3.2 Inserting the Paper Roll (printer option)

Remove the piece of paper which has been set under the printing system during transportation by pressing the PAPER FEED key.

Insert the free end of the paper roll into the slot at the rear of the instrument until a slight resistance is felt. Note the correct direction of rotation of the roll.

Press the PAPER FEED key until paper is fed through the printer. Insert the shaft into the paper roll. Slide the roll with the shaft into the guides at the rear of the instrument.

Always make sure that there is sufficient paper in the printer. Never use the printer without paper.

3.3 Measuring

Select the program module by pressing first the SHIFT key and then the ENTER key. Select 1 PRIMARY software, 2 agglutination software (optional), 3 cut off software (optional) or 4 cubic spline software (optional). After entering into module, AUTOCALIBRATION is performed. In each module select the required measurement mode and parameters and calculation mode and parameters. Press START key to measure. After measurement, the results are sent to the built-in printer or via the interface.

3.3.1 Module 1: Primary EIA Software

Select the measurement mode and calculation mode before starting the measurement.

Measurement mode is selected with the MEAS MODE key. The list of measurement modes can be scrolled forwards and backwards with the arrow keys. The desired mode can also be selected directly by the number keys.

Measurement parameters are selected with the MEAS PARAM or ENTER key. The arrow and number keys are used for entering new values for parameters. Default value or earlier selected value is selected by pressing the ENTER or MEAS PARAM key.

The following measurement modes can be selected in module 1:

1	ABSORBANCE:	Absorbances are measured at one wavelength.
2	DUAL WAVELENGTH:	Absorbances are measured using two wavelengths: Results of the second measurement are subtracted from results of the first measurement.
3	TWO POINT:	Absorbances of the plate are measured at two separate points in time. Results of the first measurement are subtracted from results of the second measurement.
4	KINETIC:	Rates of absorbance change are measured.
5	MULTI WAVELENGTH:	Absorbances are measured using individual filter selection for each column of a microplate.
6	COMPUTER CONTROL:	Instrument is controlled by an external computer.

The following measurement parameters can be selected:

FILTER: In measurement modes 1, 2, 3, 4 and 5. Enter the wavelength(s) of the filter(s) or the filter number(s) (see 8 FILTER WHEEL from section 3.6 General parameters).

BLANKING POSSIBILITIES: The following blanking possibilities are available in modes 1, 2, 3, 4 and 5:

1 NO REAGENT BLANK

2 SINGLE WELL REAGENT BLANK
- blank well is entered

3 COLUMN MEAN BLANK
- blank column (1-12) is entered
- average of the blank values (8) of the column is used

4 COLUMN BLANK
- blank column (1-12) is entered
- each row will have an individual blank value which is used

5 ROW MEAN BLANK
- blank row (A-H) is entered
- average of the blank values (12) of the row is used

6 ROW BLANK
- blank row (A-H) is entered
- each column will have an individual blank value which is used

1 BL ON EVERY PL /
2 RETAINED BLANK: Blanking on every plate (1 BL ON EVERY PL) or retained blank (2 RETAINED BLANK, blank value of a former plate is used) can also be selected. If retained blank is selected, 1 USE OLD BLANK / 2 NEW BLANK NOW will be asked before reading the next plate.

1 END RESULTS /
2 ALL RESULTS: In modes 2, 3 and 4 final results (e.g. absorbance differences) or also intermediate results (e.g. absorbances with filter 1 and filter 2) can be selected.

INTERVAL TIME: Time between successive measurements of the plate. Minimum interval time is 5 s, maximum 17 h 59 min 59 s. INTERVAL TIME parameter can be selected in modes 3 and 4. Enter the interval time as HH.MM.SS, (HH = hours, MM = minutes, SS = seconds).

NOTE: When the kinetic measurement and ALL RESULTS are selected and results are transmitted via the RS-232C interface, the actual minimum interval time is dependent on the baud rate used: the lower the baud rate, the slower the intermediate results are transmitted. This means that the interval time has to be long enough for the instrument to be able to transmit the intermediate results during the selected interval time.

Example: With baud rate 4800 the minimum interval time is 6-7 depending on the printer used.

LAG TIME: Time before measurement is started. Minimum lag time is 0 s, maximum 17 h 59 min 59 s. LAG TIME parameter can be selected in mode 4. Enter the lag time as HH.MM.SS, (HH = hours, MM = minutes, SS = seconds).

TOTAL TIME: Time during which the reaction is followed.
Minimum total time is 5 s, maximum 17 h 59 min 59 s.
TOTAL TIME parameter can be selected in mode 4.
Enter the total time as HH.MM.SS, (HH = hours, MM = minutes, SS = seconds).

Any of the calculation modes can be applied to results from any of the measurement modes. Calculation mode/modes can be selected before or after the measurement is done.
The PRINT, ABS and SHIFT keys allow the results to be obtained later from earlier measured values.
The latest selected calculation mode is used until changed.

Calculation mode is selected with the CALC MODE key. The list of calculation modes can be scrolled forward and backward with the arrow keys.

Calculation parameters are selected with the CALC PARAM or ENTER key. The arrow or number keys are used for entering new values for parameters. Default value or earlier determined value is selected by pressing the ENTER or CALC PARAM key.

The following calculation modes and their parameters can be selected in module 1:

1 NO CALCULATION: Results are sent as absorbances to built-in printer or via the interface.

2 FACTOR CALCULATION: Measured absorbances are multiplied with a factor given by the user to get concentrations. The concentration unit is defined by the unit of the factor. Concentration is calculated according to the following equation:
Concentration = FACTOR x absorbance.
The measurement parameters, calculation parameters and calculated concentrations are sent to the built-in printer or via the interface.

Parameter: FACTOR.

3 LINEAR STANDARD: The user enters the concentrations of the standards and Multiskan MS calculates a standard line with the help of these standards using the method of least squares. Measured absorbances are converted to concentration units by the use of this line. The measurement parameters, calculation parameters and concentrations obtained are sent to the built-in printer or via the interface.

Parameters:
Number of standards (NR OF STDS)
Number of replicates (NR OF REPL)
Standard concentrations (STANDARD 1) etc.
Standard locations (STANDARD 1 REPL 1 A1) etc.

Up to 8 standard solution can be incorporated on the plate in up to 3 replicates.

1 STD ON EVERY PLATE / 2 RETAINED STD: Standard on every plate (1 STD ON EVERY PLATE) or retained standard (2 RETAINED STD, standard curve of the former plate is used) can be selected. If retained standard is selected 1 USE OLD LINE / 2 NEW LINE NOW will be asked before reading the next plate.

4 STANDARD LINE:

The user can define the standard line by entering the slope and the intercept by using the known standard line. Multiskan MS calculates the concentrations with the following equation:

absorbance = A x concentration + B

where A = slope like in linear standard mode.
B = intercept

$$\text{concentration} = \frac{1}{A} \times \text{absorbance} - \frac{B}{A}$$

The measurement parameters, calculation parameters and concentrations obtained are sent to the built-in printer or via the interface.

Parameters: LINE SLOPE.
INTERCEPT.

5 LIMIT CALCULATION:

The measurement absorbance values are compared with a limit value defined by the user. If the result is lower than the set limit, negative sign (-) is sent, otherwise a positive sign (+). The measurement parameters, calculation parameters and results in +/- matrix are sent to the built-in printer or via the interface

Parameters: Limit value (LIMIT) (0.000-2.000).

6 DOUBLE LIMIT:

The measured absorbance values are compared with two limit values defined by the user. If the result is lower than the lower limit, a negative sign (-) is sent. If the result is between the two limit values, 0 is sent. If the result is higher than the upper limit, positive sign (+) is sent. The measurement parameters, calculation parameters and results in -/0/+ matrix are sent to the build-in printer or via the interface.

Parameters:
Low limit value (LOW LIMIT) (0.000-2.000).
High limit value (HIGH LIMIT) (0.001-2.000).

7 RANGE CALCULATION:

Range value defined by the user is divided into ten equal segments. Segments are numbered from 0 to 9. The measured absorbance value is represented by one of those numbers depending on which segment it lies in. The measurement parameters, calculation parameters and matrix where the results are shown by segment numbers (0...9) are sent to the built-in printer or via the interface.

Parameters: Range value (RANGE) (0.000-2.000).

Example: If an absorbance range 1.5 is set, the segments are as below:

Segment	Measured absorbance value in range	Printout
1	$A \leq 0.150$	0
2	$0.150 < A \leq 0.300$	1
3	$0.300 < A \leq 0.450$	2
4	$0.450 < A \leq 0.600$	3
5	$0.600 < A \leq 0.750$	4
6	$0.750 < A \leq 0.900$	5
7	$0.900 < A \leq 1.050$	6
8	$1.050 < A \leq 1.200$	7
9	$1.200 < A \leq 1.350$	8
10	$1.350 < A \leq 1.500$	9

8 COLUMN SUBTRACTION: Results of column 1 are subtracted from results of column 2, results of column 3 are subtracted from results of column 4, etc. or vice versa. The measurement parameters, calculation parameters and absorbance differences of every other column are sent to the built-in printer or via the interface.

Parameter: 1-23-4... or
2-14-3...

9 POINT TO POINT: The user enters the concentrations of the standards and Multiskan MS calculates a piece wise linear standard curve with the help of these standards. Measured absorbances are converted to concentration units by the use of this curve. The measurement parameters, calculation parameters and concentrations obtained are sent to the built-in printer or via the interface.

If the piece wise linear standard curve is not monotonous, the text NON-MONOTONOUS curve will be printed and the results are incorrect.

Parameters: Number of standards (NR OF STDS)
Number of replicates (NR OF REPL)
Standard concentrations (STANDARD 1) etc.
Standard locations (STANDARD 1 REPL 1 A1) etc.

Up to 8 standard solutions can be incorporated on the plate in up to 3 replicates.

1 STD ON EVERY PLATE / 2 RETAINED STD: Standard on every plate (1 STD ON EVERY PLATE) or retained standard (2 RETAINED STD, standard curve of the former plate is used) can be selected. If retained standard is selected 1 USE OLD LINE / 2 NEW LINE NOW will be asked before reading the next plate.

3.3.2 Module 2: Agglutination Software (optional)

Connect Multiskan MS to computer. Enter to module 2 in Multiskan MS. Choose the filter, blanking and parameters. Start computer control from computer. Start the measurement. 20 readings/well will be taken and sent to the computer.

3.3.3 Module 3: Cut-off Software (optional)

The following measurement modes are available in module 3:

1 ABSORBANCE: Absorbances are measured at one wavelength.

2 DUAL WAVELENGTH: Absorbances are measured using two wavelengths:
Results of the second measurement are subtracted from results of the first measurement.

3 TWO POINT: Absorbances of the plate are measured at two separate points in time. Results of the first measurement are subtracted from the results of the second measurement.

4 KINETIC: Rates of absorbance change are measured.

The following measurement parameters can be selected:

FILTER: In measurement modes 1, 2, 3 and 4. Enter the wavelength(s) of the filter(s) or the filter number(s) (see 7 FILTER WHEEL from section 3.6 General parameters).

BLANKING POSSIBILITIES: The following blanking possibilities are available in modes 1, 2, 3 and 4:

1 NO REAGENT BLANK

2 SINGLE WELL REAGENT BLANK
- blank well is entered

3 COLUMN MEAN BLANK
- blank column (1-12) is entered
- average of the blank values (8) of the column is used

4 COLUMN BLANK
- blank column (1-12) is entered
- each row will have an individual blank value which is used

5 ROW MEAN BLANK
- blank row (A-H) is entered
- average of the blank values (12) of the row is used

6 ROW BLANK
- blank row (A-H) is entered
- each column will have an individual blank value which is used

1 BL ON EVERY PL /
2 RETAINED BLANK: Blanking on every plate (1 BL ON EVERY PL) or retained blank (2 RETAINED BLANK, blank value of a former plate is used) can also be selected. If retained blank is selected, 1 USE OLD BLANK / 2 NEW BLANK NOW will be asked before reading the next plate.

1 END RESULTS /
2 ALL RESULTS: In modes 2, 3 and 4 final results (e.g. absorbance differences) or also intermediate results (e.g. absorbances with filter 1 and filter 2) can be selected.

INTERVAL TIME: Time between successive measurements of the plate. Minimum interval time is 5 s, maximum 100 min. INTERVAL TIME parameter can be selected in modes 3 and 4. Enter the interval time as XX.YY, (XX = minutes, YY = seconds).

NOTE: When the kinetic measurement and ALL RESULTS are selected and results are transmitted via the RS-232C interface, the actual minimum interval time is dependent on the baud rate used: the lower the baud rate, the slower the intermediate results are transmitted. This means that the interval time has to be long enough for the instrument to be able to transmit the intermediate results during the selected interval time.

Example: With baud rate 4800 the minimum interval time is 6-7 depending on the printer used.

LAG TIME: Time before measurement is started. Minimum lag time is 0 s, maximum 100 min. LAG TIME parameter can be selected in mode 4. Enter the lag time as XX.YY, (XX = minutes, YY = seconds).

TOTAL TIME: Time during which the reaction is followed.
Minimum total time is 5 s, maximum 100 min.
TOTAL TIME parameter can be selected in mode 4.
Enter the total time as XX. YY, (XX = minutes, YY = seconds).

The following calculation modes and calculation parameters can be selected in module 3:

1 NO CALCULATION — Results are sent as absorbances to built-in printer or via the interface.

2 DOUBLE LIMIT — The measured absorbance values are compared with two limit values defined by the user. If the result is lower than the lower limit, a negative sign (-) is sent. If the result is between the two limit values, 0 is sent. If the result is higher than the upper limit, positive sign (+) is sent. The measurement parameters, calculation parameters and results in -/0/+ matrix are sent to the build-in printer or via the interface.

Parameters:
Low limit value (LOW LIMIT) (0.000-2.000).
High limit value (HIGH LIMIT) (0.001-2.000).

3 RANGE CALCULATION: — Range value defined by the user is divided into ten equal segments. Segments are numbered from 0 to 9. The measured absorbance value is represented by one of those numbers depending on which segment it lies in. The measurement parameters, calculation parameters and matrix where the results are shown by segment numbers (0...9) are sent to the built-in printer or via the interface.

Parameters: Range value (RANGE) (0.000-2.000).

Example: If an absorbance range 1.5 is set, the segments are as below:

Segment	Measured absorbance value in range	Printout
1	$A \leq 0.150$	0
2	$0.150 < A \leq 0.300$	1
3	$0.300 < A \leq 0.450$	2
4	$0.450 < A \leq 0.600$	3
5	$0.600 < A \leq 0.750$	4
6	$0.750 < A \leq 0.900$	5
7	$0.900 < A \leq 1.050$	6
8	$1.050 < A \leq 1.200$	7
9	$1.200 < A \leq 1.350$	8
10	$1.350 < A \leq 1.500$	9

4 CUT-OFF — The measured absorbance value is compared with a cut off value calculated with the aid of a cut off equation using measured absorbances of positive or negative controls.

Parameters:

CUT OFF EQUATION	enter the equation with the aid of (,), +, -, x, /, P, L and N keys Example: (P+N)x0.5
NO OF POS CONTROL	enter the number of positive controls
POS CONTROL A1	enter the positions of positive, negative or low positive controls
NO OF NEG CONTROL NEG CONTROL A1	See pos control above
NO OF LOW POS CONTROL LOW POS CONTROL A1	See pos control above

GREY AREA		enter the absorbance range where the results obtained are doubtful; results inside grey area are presented with 0
INTERPRETATION	1 + > – 2 – > +	Interpretation of results is chosen: 1 + > –: results above cut off value are presented with +, results below cut off are presented with – 2 – > +: results above cut off value are presented with -, results below it are presented with +

3.3.4 Module 4: Cubic Spline (optional)

The following measurement modes are available in module 4:

1	ABSORBANCE:	Absorbances are measured at one wavelength.
2	DUAL WAVELENGTH:	Absorbances are measured using two wavelengths: Results of the second measurement are subtracted from results of the first measurement.
3	TWO POINT:	Absorbances of the plate are measured at two separate points in time. Results of the first measurement are subtracted from the results of the second measurement.
4	KINETIC:	Rates of absorbance change are measured.

The following measurement parameters can be selected:

FILTER:

In measurement modes 1, 2, 3 and 4. Enter the wavelength(s) of the filter(s) or the filter number(s) (see 7 FILTER WHEEL from section 3.6 General parameters).

BLANKING POSSIBILITIES:

The following blanking possibilities are available in modes 1, 2, 3 and 4:

1 NO REAGENT BLANK

2 SINGLE WELL REAGENT BLANK
- blank well is entered

3 COLUMN MEAN BLANK
- blank column (1-12) is entered
- average of the blank values (8) of the column is used

4 COLUMN BLANK
- blank column (1-12) is entered
- each row will have an individual blank value which is used

5 ROW MEAN BLANK
- blank row (A-H) is entered
- average of the blank values (12) of the row is used

6 ROW BLANK
- blank row (A-H) is entered
- each column will have an individual blank value which is used

1 BL ON EVERY PL /
2 RETAINED BLANK:

Blanking on every plate (1 BL ON EVERY PL) or retained blank (2 RETAINED BLANK, blank value of a former plate is used) can also be selected. If retained blank is selected, 1 USE OLD BLANK / 2 NEW BLANK NOW will be asked before reading the next plate.

1 END RESULTS /
2 ALL RESULTS: In modes 2, 3 and 4 final results (e.g. absorbance differences) or also intermediate results (e.g. absorbances with filter 1 and filter 2) can be selected.

INTERVAL TIME: Time between successive measurements of the plate. Minimum interval time is 5 s, maximum 100 min. INTERVAL TIME parameter can be selected in modes 3 and 4. Enter the interval time as XX.YY, (XX = minutes, YY = seconds).

NOTE: When the kinetic measurement and ALL RESULTS are selected and results are transmitted via the RS-232C interface, the actual minimum interval time is dependent on the baud rate used: the lower the baud rate, the slower the intermediate results are transmitted. This means that the interval time has to be long enough for the instrument to be able to transmit the intermediate results during the selected interval time.

Example: With baud rate 4800 the minimum interval time is 6-7 depending on the printer used.

LAG TIME: Time before measurement is started. Minimum lag time is 0 s, maximum 100 min. LAG TIME parameter can be selected in mode 4. Enter the lag time as XX.YY, (XX = minutes, YY = seconds).

TOTAL TIME: Time during which the reaction is followed.
Minimum total time is 5 s, maximum 100 min.
TOTAL TIME parameter can be selected in mode 4.
Enter the total time as XX. YY, (XX = minutes, YY = seconds).

The following calculation modes and calculation parameters can be selected in module 4:

1 NO CALCULATION Results are sent as absorbances to built-in printer or via the interface.

2 CUBIC SPLINE Cubic spline is a sigmodial curve used for example with hormones and tumour markers.

Parameters:

NO OF STDS	2	2 to 8 standards is allowed.
NO OF REPL	1	1 to 3 replicates is allowed.
STANDARD 1	0.000	Enter concentration of standard 1.
STANDARD 1 REPL 1	A1	Enter location(s) of standard 1.
STANDARD 2	0.000	Enter concentration of standard 2.
STANDARD 2 REPL 1	A1	Enter location(s) of standard 2.

STANDARD ON EVERY PLATE or RETAINED STANDARD

1 UNIT no unit, U/l, IU/l, mIU/l, g/l, mg/l, mg/dl, µg/l, µg/ml, ng/ml, mmol/l, µmol/l, nmol/l

1 scale LIN/LIN
2 scale LIN/LOG
3 scale LOG/LIN
4 scale LOG/LOG

After measurement and data transfer it is asked if the results are accepted or if a new fit is required:

1 ACCEPT RESULTS
2 NEW FIT

If results are accepted, the instrument goes to READY state. If a new fit is required, new scale parameters have to be selected and the PRINT key pressed. The new results will be interfaced. In case retained standard is used

1 USE OLD CURVE
2 NEW CURVE NOW is asked to be selected.

3.4 Computer control

In modules 1 and 2 an external computer can be used to substitute the keypad use of Multiskan MS.

The computer control occurs via the RS-232C interface.

The computer mode is started by selecting measurement mode 6. The computer can also start the computer mode by sending an R-command after the instrument displays READY and the instrument has set DTR to high state.

Returning to keypad use is accomplished either by pressing the STOP key or by sending a Q-command.

Computer Control Commands in Module 1:

In the computer control mode Multiskan MS responds to the following commands:

R	Starts the computer control.
F1...F8	Filter selection.
FMnn...n 12	Individual filter is selected for each column. n=filter number, numbers from 1 to 8 can be selected.
E0	Selection of continuous plate movement.
E1	Selection of step wise plate movement.
C	Current program module number is sent.
Cn	Selection of program module, n = 1 - 4, where 1 = primary EIA module 2 = agglutination module 3 = cut off module 4 = cubic spline module Note: After selecting a new program module autocalibration is taking place (25 s). A new R command has to be entered now to enter the computer control.
A	Air blank.
B	Reagent blank on column defined by command S.
P	Measuring the whole plate and sending the results via the interface in the microplate format.
PM	Measuring the whole plate using individual filter for each column and sending the results via the interface in the microplate format.
Pn	Measuring the whole plate n times (n = 1-99) and sending the results via the interface in the microplate format.
Mn	Measuring n columns starting from the starting column (n = 1-12)
Sj	Determining the relative starting column (j = 1-12)
I	Initializing the starting column so that the absolute starting column is 1 Example: I LF S2 LF M4 LF (columns 3, 4, 5 and 6 are measured)
O	Driving the plate out and initializing the starting column so that the absolute starting column is j. Example: O LF S2 LF M4 LF (columns 2, 3, 4 and 5 are measured)

X1	Set shaking speed to maximum. (This speed is selected as a default.)
X2	Set shaking speed to 66 % of maximum.
X3	Set shaking speed to 33 % of maximum.
Zn	Shaking of the microplate, n is shaking time in seconds (n = 00-60) Example: Shaking of 5 s is entered as Z05.
T	Date and time.
N	Serial number.
V	Version number of the software.
Q	Returning to the keypad use.

Commands T, N and V can also be used while the instrument displays READY.

Each command must be terminated by LF. Multiskan MS disregards spaces before the command. Up to 48 extra characters between the command and LF will be ignored.

Acknowledgement Messages in Module 1:

Multiskan MS acknowledges each command by sending a message. The following messages are used:

OK	The action has been successfully performed.
ER1	Error (see section 5, Trouble shooting)
ER3	An invalid command that Multiskan MS was not able to understand.

The P and PM commands are acknowledged by sending values of the measured wells. Data flow to the computer is a follows:

DATA DATA DATA DATA DATA DATA DATA DATA DATA DATA DATA DATA CRLF
DATA DATA DATA DATA DATA DATA DATA DATA DATA DATA DATA DATA CRLF
DATA DATA DATA DATA DATA DATA DATA DATA DATA DATA DATA DATA CRLF
DATA DATA DATA DATA DATA DATA DATA DATA DATA DATA DATA DATA CRLF
DATA DATA DATA DATA DATA DATA DATA DATA DATA DATA DATA DATA CRLF
DATA DATA DATA DATA DATA DATA DATA DATA DATA DATA DATA DATA CRLF
DATA DATA DATA DATA DATA DATA DATA DATA DATA DATA DATA DATA CRLF
DATA DATA DATA DATA DATA DATA DATA DATA DATA DATA DATA DATA CRLF

where

CRLF = carriage return and line feed
DATA = 6 characters, where the first character can be a space or a minus sign and the remainder can be digits or decimal points

The V command sends the text MULTISKAN MS VERSION X.Y (where X can be 1...9 and Y can have 1 to 8 characters) as acknowledgement message.

The T command is acknowledged by sending XX. XXX 19XX XX:XX:XX
(example: 19. MAR 1991 20:42:03).

The N command is acknowledged by sending SERIALX...X, where X can be 0...9, - or space
(example: SERIAL352-00001).

Computer Control Commands in Module 2 (optional):

R	Starts the computer control
Q	Returning to keypad use
WM <points>	Agglutination measurement is performed. The parameter <points> is optional and defines which ones of the 20 measured profile points are sent in the response. The parameter is a string of ASCII "1":s and "0":s. The string length is free, the character in the middle of the string corresponds to point 10. If the string is shorter than 20 characters, the undefined points will not be sent in response. If <points> is left out, absorbances of all 20 points will be sent.
F1-F8	Filter selection (filters 1-8)
C	Current program module number is sent.
Cn	Selection of program module, n = 1 - 4, where 1 = primary EIA module 2 = agglutination module 3 = cut off module 4 = cubic spline module Note: After selecting a new program module autocalibration is taking place (25 s). A new R command has to be entered now to enter the computer control.
V	Version numbers of the software
T	Date and time
N	Serial number

Acknowledgement Message in Module 2:

For acknowledgement messages see module 1.

Measuring with Multiskan MS under Computer Control

The computer program, which controls Multiskan MS, must consist of modules for

- sending a command to Multiskan MS,
- waiting for an answer from Multiskan MS and
- working according to a message or results.

Computer Control Commands in All Modules

Modules 1 and 2 are recommended to use with an external computer, because all commands exist in these modules. However other modules contain some commands:

Com.	Meaning	MOD 1 PRIM	MOD 2 AGG	MOD 3 CUT	MOD 4 CUB
R	Start remote control	Yes	Yes	Yes	Yes
Fn	Filter n=1..8	Yes	Yes	Yes	Yes
FMnn	Multifilter nn 12 pcs	Yes	—	—	—
En	Measurement mode n=0, 1	Yes	—	Yes	—
C/Cn	Module change n= , 1..4	Yes	Yes	Yes	Yes
A	Air blank	Yes	—	Yes	—
B	Column blank	Yes	—	Yes	—
P/Pn	Plate measure n= , 1..99	Yes	—	Yes	—
PM	Multifilter measure	Yes	—	—	—
Mn	Column measure n=1..12	Yes	—	—	—
Sj	Set column j=1..12	Yes	—	Yes	—
O	Initialize column = 0	Yes	—	Yes	—
I	Initialize column = 1	Yes	—	Yes	—
Xn	Mixing speed n=1..3	Yes	—	Yes	Yes
Zn	Mixing n=00..60	Yes	—	Yes	Yes
T	Time	Yes	Yes	Yes	Yes
N	Serial number	Yes	Yes	Yes	Yes
V	Software version	Yes	Yes	Yes	Yes
Q	Quit remote control	Yes	Yes	Yes	Yes
WMp	Agglut. measurement	—	Yes	—	—

3.5 Storing the Programs

User determined programs can be stored into the memory of the instrument for later use.

Storing is done with the SAVE key. When it is pressed the instrument asks for program number (PROGRAM NUMBER), which can be 1 to 64. Enter the program number. SAVING DATA is blinking on the display for a while.

The stored program can be taken later into use with the RECALL key and using the same program number.

3.6 General Parameters

The following general parameters can be selected with the PARAM key (and the arrow keys or ENTER key):

1	RS-FORMAT:	1. PRINTER FORMAT (header information and absorbances are sent via the interface) 2. COMPUTER FORMAT (only absorbances are sent via the interface in plate format) 3. OLD MCC FORMAT (only absorbances are sent via the interface in column format)
2	PLATE MOVEMENT:	The speed at which the plate is moved can be selected: 1. CONTINUOUS (5 s) 2. STEP MODE (25 s)
3	PROGRAM PRINTING:	Programs in the memory of the instrument are printed on the built-in printer.
4	PRINTER ON/OFF SELECTION	On/off selection of the built-in printer. When the printer is suppressed, results are automatically sent via the interface. When the instrument is switched on, the latest selection will be valid.
5	PLATE ANALYSIS:	After results have been presented in the microplate format, the instrument sends via the interface the mean value, minimum value, maximum value, delta value, standard deviation value, delta percentage and coefficient of variation percentage for every column and row and also for the whole plate. On/off selection of the analysis: 1. ANALYSIS OFF 2. ANALYSIS ON (not available on module 2 and 4)
6	FILTER WHEEL:	Number of filters and filter wavelengths can be entered. NR OF FILTERS 1 — Number of filters (1 - 8) can be entered or changed with the arrow and number keys. FILTER 1 WAVEL 340 — Filter wavelengths in nanometers can be entered or changed with the arrow and number keys. The entered values are used until changed.
7	CLOCK SET:	Date and time (year, month, day of the week, hour, minute) can be changed with the arrow and number keys.
8	PRINTOUT SPACING:	On the printout of the external printer an empty row can be left between the results of the rows (print out spacing). On/off selection of the printout spacing: 1. NO SPACING 2. PRINTOUT SPACING
9	MIXING	Mixing of the microplate before measurement is started 1. MIXING OFF 2. MIXING ON * MIXING FAST * MIXING MEDIUM * MIXING SLOW – MIXING TIME: enter the time in seconds (0-60 s). Default value is 15 s.
10	MODULE LISTING	List of modules is printed out.

4. SERVICING

4.1 Maintenance

To guarantee the continuing reliability and accuracy of Multiskan MS avoid disturbing any of the optical system components. A misalignment of the light path affects measurements.

Keep the optical system clean to ensure proper functioning and accurate results. Prevent any liquid from entering the instrument. Keep the instrument free of dust and other foreign matter. Avoid touching lens surfaces, filters or detectors with fingers.

4.2 Routine Cleaning of the Instrument

Turn the power off and unplug the instrument.

Use disposable gloves.

Clean the instrument outside, the track (Fig.11:1) and the plate carrier (Fig.11:2) with a cloth dampened with water or mild detergent.

4.3 Cleaning of the Optical System

Remove the two retaining screws (Fig.11:3, 11:4) of the measuring assembly cover and remove the cover. Clean the track (Fig. 11:5) inside the measuring assembly as above.

NOTE: **Do not touch the measuring circuit board (Fig. 11:6) by hand.**

Clean the eight focusing lenses at the end of the optical fibre bundle (Fig. 11:7) with a cloth dampened with water, mild detergent or 96 % ethanol. If 96 % ethanol is used, wipe afterwards with a napless cloth dampened with water. The upper lenses are situated under the detector frame (Fig.11:8). Remove the two detector frame from fasteners with washers (Fig. 11:9). Lift the detector frame from the handle (Fig. 12:1). Clean the upper lenses (Fig. 12:2) by the same way as focusing lenses.

NOTE: **Do not use acetone to clean the plastic lenses (focusing lenses or upper lenses). Avoid harsh treatment.**

After cleaning the upper lenses lower the detector frame back to it´s position.

NOTE: **Make sure that the Hall-element sensor (Fig. 12:3) is positioned into its slot (Fig.12:4).**

Replace the detector frame fasteners with washers (Fig. 11:9). Make sure that detector frame fasteners are placed so that the edge in the fastener faces up (see Fig. 11).

NOTE: **Do not bend the measuring circuit board cable (Fig. 11:10).**

Place the ground wire (Fig. 11:11) back to its position making sure that the ground wire will stay in its place. Replace the cover retaining screws. The screw (Fig. 11:3) will connect the measuring assembly cover to the instrument ground to suppress electrical disturbances.

Clean the interference filters with napless cloth or with lense paper. It is recommended not to use liquids when cleaning the filters.

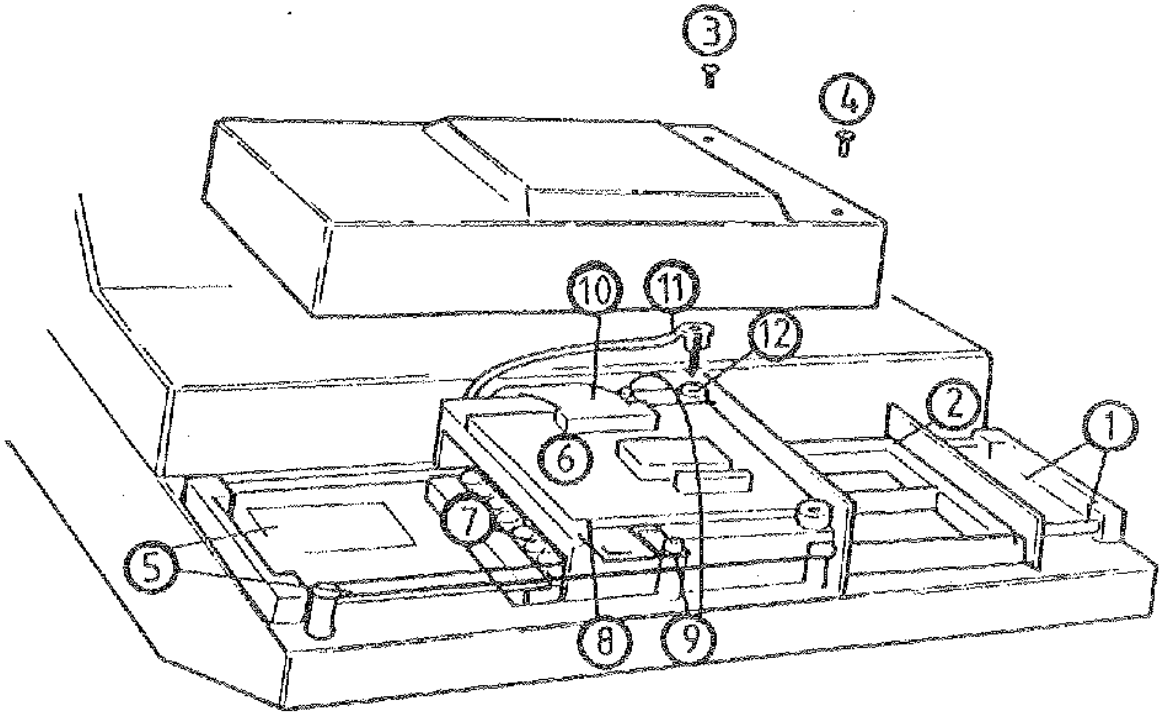

1. Track
2. Plate carrier
3. Retaining screw of the measuring assembly cover
4. Retaining screw of the measuring assembly cover
5. Track
6. Measuring circuit board
7. Focusing lenses
8. Detector frame
9. Detector frame fastener with washer
10. Measuring circuit board cable
11. Ground wire
12. Position of the ground wire

Figure 11. Opening the measuring assembly cover

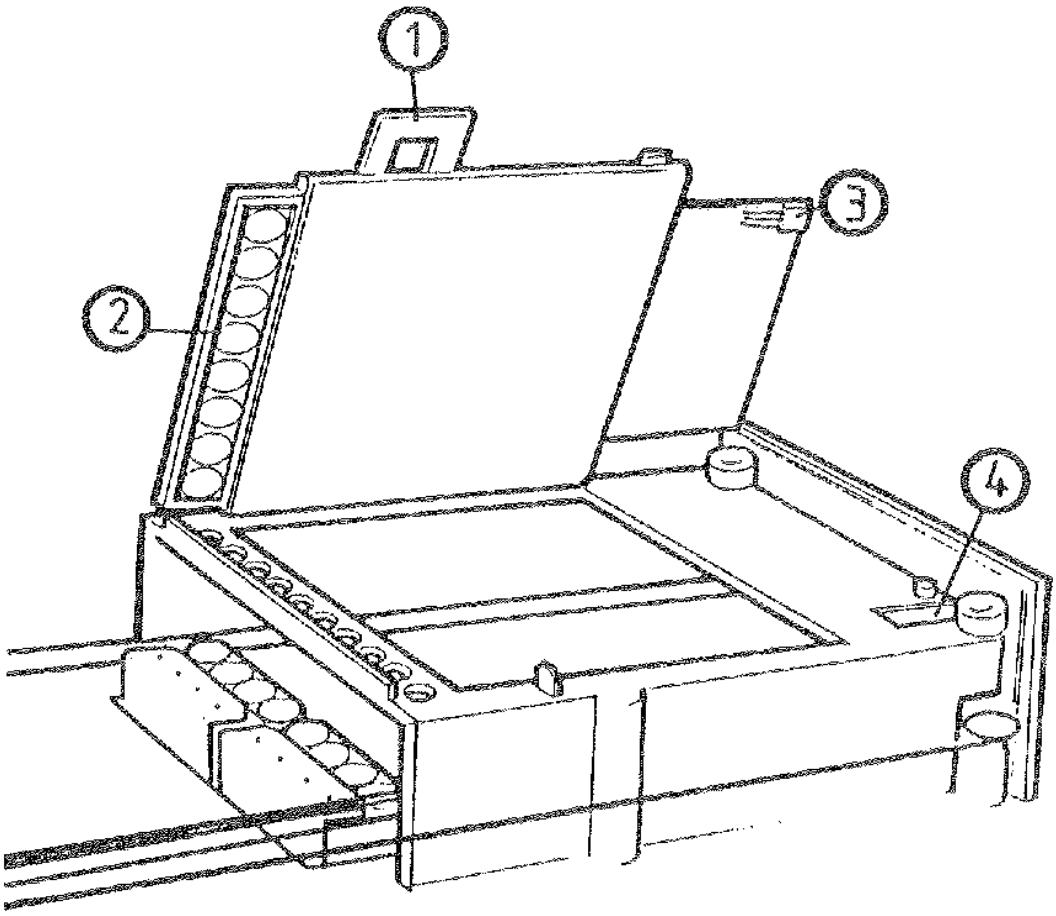

1. Handle
2. Upper lenses
3. Hall element sensor
4. Position of the Hall element sensor

Figure 12. Lifting the detector frame

4.4 Disinfection Procedure

Disinfect the instrument in case of hazard of infectious agents as follows:

Turn the power off and unplug the instrument.

Use disposable gloves.

Clean the instrument outside, the track (Fig. 11:1) and the plate carrier (Fig.11:2) with a disposable cloth dampened either with 70 % ethanol or 1 % glutaraldehyde.

Remove the two screws (Fig. 11:3, 11:4) of the measuring assembly cover and remove the cover. Clean the track (Fig. 11.5) inside the measuring assembly and the eight focusing lenses at the end of the optical fibre bundle (Fig. 11:7) as above.

NOTE: **Do not touch the measuring circuit board (Fig. 11:6) by hand.**

The upper lenses are situated under the detector frame (Fig. 11:8). Remove the two detector frame fasteners with washers (Fig. 11:9). Lift the detector frame from the handle (Fig. 12:1). Clean the upper lenses (Fig.12:2) by the same way as focusing lenses.

NOTE: **Do not use acetone to clean the plastic lenses (focusing lenses or upper lenses). Avoid harsh treatment.**

Let the surfaces of the instrument to dry.

Wipe out the thin film of the disinfection agent from the surface of eight focusing lenses and upper lenses with a napless lens tissue dampened with water. Dry the lenses with a dry lens tissue.

After drying the upper lenses lower the detector frame back to its position,

NOTE: **Make sure that the Hall-element sensor (Fig. 12:3) is positioned into its slot (Fig.11).**

Replace the detector frame fasteners with washers (Fig. 11:9). Make sure that detector frame fasteners are placed so that the edge in the fastener faces up (see Fig. 11)

NOTE: **Do not bend the measuring circuit board cable (Fig. 11:10).**

Place the ground wire (Fig.11:11) Back to its position (Fig. 11:12). Slide the measuring assembly cover to its position making sure that the ground wire will stay in its place. Replace the cover retaining screws. The screw (Fig.11:3) will connect the measuring assembly cover to the instrument ground to suppress electrical disturbances.

Please note that this procedure can not be a guarantee against contamination of personnel handling the instrument.

4.5 Changing Individual Filters in the Filterwheel

Switch the power off.
Unscrew the two cover retaining screws and lift the cover.
Lift the filter wheel from the filter wheel slot. Do not touch filter surfaces.
Remove the filter spring by unscrewing the spring position holding screw.
Insert a new filter into the wheel so that the arrow on the filter rim points downwards.
Place the filter spring into its original position and fasten the screw.
Slide the filter wheel back into the filter wheel slot with the toothed edge facing towards the rear of the instrument.
The filter wheel is drawn into position by the central permanent magnet.
Close the instrument cover and replace the retaining screws.

NOTE: **When you change the amount of filters by adding a new filter you must change the parameter values (filter wheel, position and wavelength).**

4.6 Changing the Lamp

If the lamp burns out, replace it as follows.

Turn the power off and unplug the instrument. Open the instrument cover by unscrewing the two screws on each side of the instrument and lift up the cover.

NOTE: **The lamp and its surroundings may be hot.**

Lift up the lamp with the terminal socket. Pull the terminal socket from the lamp contacts (see Fig. 13).

Do not touch the reflective surface of the new lamp or the bulb itself.

Refit the terminal socket to the contacts of the new lamp approved by the manufacturer (OSRAM 64607, 8V/50 W). Place the new lamp in its place.

Close the instrument cover and replace the retaining screws. Plug in the instrument and switch the power on.

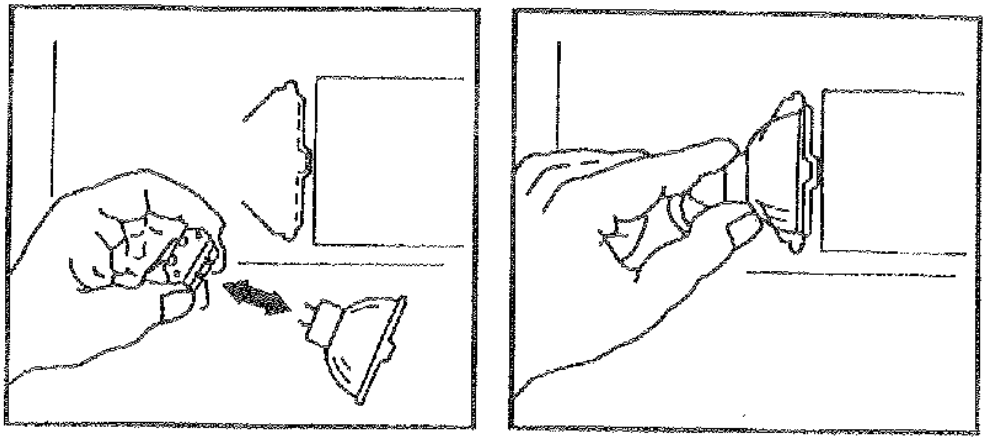

Figure 13. Changing the lamp

4.7 Changing the Fuses

The fuses are located at the rear of the instrument (Fig. 8:3).

Switch the power off.

Unplug the instrument and disconnect the power cord from the power input socket.

Unscrew the caps of the fuse holders (Fig. 14).

Replace the blown fuses with the same type.

Screw the caps back onto the fuse holders.

Reconnect the power cord and switch the power on.

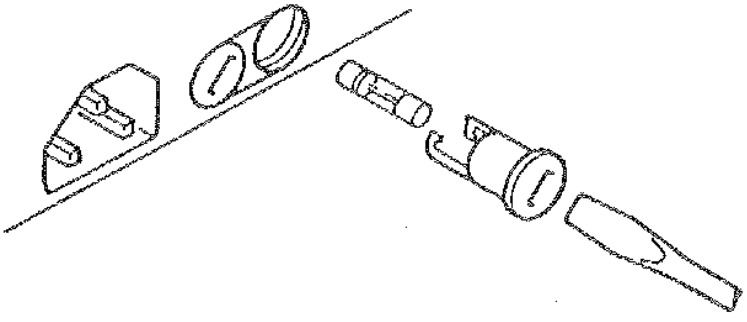

Figure 14. Changing the fuses

5. TROUBLE-SHOOTING

ERROR	REASON	RECOMMENDED ACTION
No power when switched on.		Check that the instrument is plugged in. Check that the fuses are not blown.
Unsuccessful transfer of data via the interface system.		Check that the instrument baud rate matches that of the computer. Check that the both instruments have the same character length and parity configuration. Check that the transmit/receive pin configuration is set correctly. Check that both instruments use the same kind of handshake. Check the connection cable.
PLATE ERROR		Check that the plate is properly positioned in the plate carrier. Check that no foreign matter is obstructing the carrier. Check that the rails are not dirty nor bent. Check that the toothed belt is not broken.
FILTER ERROR	Filter wheel is missing or faulty.	Place the filterwheel into the filterwheel slot. Check that the filter wheel has been properly installed or is not broken.
ADJUST OFFSET	Adjustment of light intensity faulty.	Contact service.
TOO MUCH LIGHT	Too much light enters the detectors.	Check the filter. Contact service.
NO LIGHT	Lamp has burn out.	Change the lamp.

NO CENTRONICS PRINTER	Parallel, Centronics type printer not connected.	Connect the Centronics printer.
PRINTER OFF LINE	Centronics printer in off-line position.	Switch on-line
OUT OF PAPER	Paper running out in Centronics printer.	Add paper
SAVING ERROR	Saving of the program not successful.	Contact service.
CHECKSUM ERROR	Loading of the program not successful.	Contact service.
EQUATION ERROR 1-5	Errors in cut-off equations:	
EQUATION ERROR 1	First character in equation is).	Should be (.
EQUATION ERROR 2	Number of parenthesis uneven.	Should be even.
EQUATION ERROR 3	First symbol in cut off equation not (or operand.	Should be (or operand.
EQUATION ERROR 4	Operator not followed by C or operand.	Change.
EQUATION ERROR 5	Two operands after each other in the equation.	Change.

NOTE!	Operator:	+, -, *, /
	Operand:	Well number A1 - H12 figure 1, 1.0, 0.1 etc.
	Symbol for control:	P = positive control L = low positive control N = negative control

6. GENERAL SPECIFICATIONS

Weight:	Basic unit 11 kg
Overall dimensions:	140 mm (H) x 420 mm (W) x 320 mm (D)
Mains power supply:	100 - 120 V, 50/60 Hz, nominal (operating range 90...136 V) 200 - 240 V, 50/60 Hz, nominal (operating range 180...256 V) Automatic range selection
Power consumption:	170 VA max
Fuses:	2 x 3.5 A, slow-blow type UL198G Time Delay, 5x20 mm
Operating conditions: (indoor use)	+10°C to +40°C, RH 90 % max Tested according to IEC 68-2-1, test Ab, (Cold), IEC 68-2-2, test Bb, (Dry heat) and IEC 68-2-3, test Ca, (Damp heat)
Transportation conditions:	-40°C to +70°C, packed in transportation package Tested according to IEC 68-2-1, test Ab, (Cold) and IEC 68-2-2, test Bb, (Dry heat)
Storage conditions:	-25°C to +50°C, packed in transportation package Tested according to IEC 68-2-1, test Ab, (Cold) and IEC 68-2-2, test Bb, (Dry heat)
Microplates:	The manufacturer recommends the use of flat-bottomed microplates. (Specifications are set for flat-bottomed microplates).
Spectral range:	400 – 750 nm (optional 340 – 750 nm), 8 filter slots in a filterwheel.
Read-out range:	Min 0 – 3.5 abs. units
Measurement range:	0 – 2.000 abs. units
Accuracy:	± 2.0 % or ± 0.007 abs. units whichever is greater
Precision:	CV < 0.5 % or within 0.007 abs. units at 401 – 750 nm and at 340 – 400 nm and 1 – 1.5 abs. units CV < 1.0 % at 340 – 400 nm and 1.5 – 2 abs. units
Linearity:	± 2.0 % or ± 0.007 abs. units whichever is greater
Long term stability:	Because of the autoblanking procedure the instrument is stable
Speed of operation	
warm up time:	1 minute (time taken to perform autocalibration)
reading speed:	less than 5 s/plate (continuous mode)
Display:	2x20 character alphanumeric LC display
Keypad:	30 keys with click action switches
Interface:	RS-232C serial interface, baud rate: 150, 300, 600, 1200, 2400, 4800, 9600, 19200, (9600 set by the manufacturer) character format: 1 start bit, 8 data bits, 1 stop bit, no parity Centronics-type parallel printer interface optional RS-232C interface optional IEEE-488 interface
Optical system:	Quartz tungsten halogen lamp (Osram 64607, 8V/50W), chopper wheel, aperture and condenser lens, semitransparent mirror, interference filter (in filterwheel), fibre bundle, focusing lenses, upper lenses and detectors
Interference filters:	Max. 8 selectable filters in a filterwheel in range 400 – 750 nm (optional range 340 – 750 nm). Half band width 6 – 9 nm, center wavelength accuracy ±2.0 nm (filters 340 – 413 nm). Half band width 3 – 6 nm, center wavelength accuracy ±2.0 nm (filters 414 – 750 nm).

7. SAFETY SPECIFICATIONS

Multiskan MS fulfils the following requirements:	IEC 1010-1 including Amendments 1 and 2 CSA C22.2 No 1010.1 (file LR 62464-C)

The safety specifications are met also under the following enviromental conditions in addition or in excess to those stated in the operating conditions:

Altitude:	up to 2000 m
Temperature:	+5°C - +40°C
Mains supply fluctuations:	±10 %
Installation category (overvoltage category):	II according to IEC 664-1 (Note 1)
Pollution degree:	2 according to IEC 664-1 (Note 2)

NOTE 1 Installation category (overvoltage category) defines the level of transient overvoltage which the instrument is designed to withstand safely. It depends on the nature of the electricity supply and its overvoltage protection means. For example in CAT II which is the category used for instruments in installations supplied from supply comparable to public mains such as hospital and research laboratories and most industrial laboratories the expected transient overvoltage is 2500 V for a 230 V supply and 1500 V for a 120 V supply.

NOTE 2 Pollution degree describes the amount of conductive pollution present in the operating environment. Pollution degree 2 assumes that normally only non-conductive pollution such as dust occurs with the exception of occasional conductivity caused by condensation.

Both of these affect the dimensioning of the electrical insulation within the instrument.

CONFORMANCE TO THE EU DIRECTIVES

Multiskan MS bearing the CE mark conforms to the following EU directives	89/336/EEC (as amended by 92/31/EEC) relating to Electro-magnetic Compability 73/23/EEC (Low Voltage Directive)	
Performance specifications used to verify conformance to the Directives above	EN 55022	class B
	IEC 1000-4-3/EN 61000-4-3	3 V/m
	IEC 1000-4-2/EN 61000-4-2	4 kV CD, 8 kV AD
	IEC 1000-4-4/EN 61000-4-4	1 kV
	IEC 1010-1/EN 61010-1 Including Amendments 1 and 2	

Brief Operating Instructions

Unpack the instrument.

Install the filter wheel.

Install the lamp.

Plug into mains.

Switch the instrument on.

Insert the paper roll. (Printer option)

Select the RS-format for printer or computer.

Select the plate movement to be continuous or step wise.

Select print out on the built-in printer if required.

If built-in printer, then select printing width.

If external printer, then select print out spacing.

Select shaking if required.

Select the program module.

Select the measurement mode.

Select the measurement parameters.

Select the calculation mode.

Select the calculation parameters.

Save the program.

Connect printer or computer.

Check the baud rate, transmit / receive pin configuration and handshake with DIL-switches.

Press the START key.

Results are recorded on built-in printer, external printer or computer.

Interface System

Data transfer to a computer occur via a built-in serial RS-232C interface.
Data transfer to a printer may occur via a built-in RS-232C interface or via a parallel centronics interface.

Interface hardware specification for RS-232C interface

The hardware specifications of the interface are as follows:

1. The configuration is specified as for data terminal equipment (DTE).

2. The baud rate (speed at which data is changed between an external computer and the instrument) is selected by the DIL switches at the rear of the instrument. The following baud rates are available: 150, 300, 600, 1200, 2400, 4800, 9600 and 19200. The baud rate 9600 is set by the manufacturer.

3. Character format is 10 bits with 1 start bit, 8 data bits, 1 stop bit and no parity. The format cannot be changed.

4. DTR/DSR handshake is recommended to use. Handshake type used is set by the manufacturer. The desired alternative is selected by a DIL switch at the rear of the instrument.

5. Transmit/receive pin configuration: pin 2 transmits and pin 3 receives or vice versa. The desired configuration is selected by the DIL switches at the rear of the instrument. The following configuration is set by the manufacturer: pin 2 transmits and pin 3 receives.

Signals Connected to the DB-25 Connector

The following signals are connected to the DB-25 connector at the rear of the instrument:

RS-232C PORT DB-25 CONNECTOR	
PIN NO	SIGNAL NAME
2	TxD or RxD
3	RxD or TxD
6	DSR
7	GND
20	DTR

Signal description:

2. TxD, Transmit Data output (or RxD, Receive Data input)
3. RxD, Receive Data input (or TxD, Transmit Data output)
6. DSR, Data Set Ready. The input tells Multiskan MS that the printer or computer is ready
7. GND, signal ground
20. DTR, Data Terminal Ready. DTR is in the high state when Multiskan MS is ready to receive a command.

Baud Rate Selection

The baud rate (speed at which data is changed between Multiskan MS and the computer) is selected by the DIL switches 1, 2 and 3 (Fig. 8:6).

Switch position 1	2	3	Baud rate	
down	down	down	150	
down	down	up	300	
down	up	down	600	
down	up	up	1200	
up	down	down	2400	
up	down	up	4800	
up	up	down	9600	set by the manufacturer
up	up	up	19200	

To determine which baud rate is necessary for any given computer/printer:

1. Consult the operating manual supplied with the computer (or printer)
2. Contact the dealer from which the computer (or printer) was purchased
3. Contact the computer (or printer) manufacturer.

Transmit/Receive Pin Configuration

In order to make connection between Multiskan MS and the computer easier, pin 2 can be selected to transmit or receive and pin 3 vice versa.
The configuration is selected by the DIL switches 5, 6, 7 and 8 (Fig.8:6).

Switch position 5	6	7	8	transmit/receive pin
down	down	up	up	pin 2 transmits and 3 receives (set by the manufacturer)
up	up	down	down	pin 2 receives and 3 transmits

Handshake Selection

DTR/DSR handshake:
The DTR/DSR hardware handshake makes it possible for two devises connected via the RS-232C line to check readiness before exchanging data or commands.

DSR, Data Set Ready (pin 6):
When DSR handshake is used, high (positive) state indicates that the printer or computer is ready to accept a data character. Low (negative) state indicates that the printer or computer is busy and not ready to accept a data character. Thus, before sending each character Multiskan MS waits until the other device sets the DSR line to the high state.

DSR handshake is switched on or off by DIL switch 4 (Fig. 8:6).

Switch 4 position	Handshake
up	enabled (set by the manufacturer)
down	disabled

When DSR handshake is switched off, Multiskan MS does not test DSR before sending each character.

The state of DTR (pin20) can always be checked by a computer regardless of the fourth DIL switch.

Parallel Centronics Type Printer Interface

Data transfer via a parallel Centronics type printer interface is performed through the Centronics interface (Fig. 8:7).

When using the Centronics interface, the secondary interface DIL switches 1, 2 and 3 (Fig. 8:8) should be positioned as follows:

Switch position 3	2	1	
down	up	down	Centronics type printer interface in use

Note: When the secondary switches are in the position

3	2	1
down	up	up

the results are sent via Centronics and RS-232C interface simultaneously.

Ordering Information and Address

Accessories	Labsystems code
RS-232C interface cable for printer	2304040
RS-232C PC – serial cable F-M	2305300
RS-232C interface cable for MAC	2303850
Filterwheel without filters	24071230
Other filters in the 340-750 nm range can be ordered (XXX corresponds to the wavelength)	142xxx0
Filter box	1041980
Instruction manual	1506260
Dust cover	1610002
Shaft for paper roll	1042220

Spares for maintenance	
Lamp	2400620
Fuse 3.5 A (10 pcs/box)	1210950
Paper roll	1600510

LABSYSTEMS OY
(head office)
Sorvaajankatu 15
P.O. Box 8
FIN-00881 Helsinki
FINLAND
Tel: +358-9-329 100
Telefax: +358-9-3291 0415

Examples How to Use Multiskan MS

Example 1.

Module 1, absorbance measurement with point to point calculation with 3 standards and 2 replicates on every plate. Blank samples are situated before standards. Results are printed on the built-in printer.

Key to be pressed	Display/Procedure performed
	READY ! XX:YY
SHIFT + ENTER	PROGRAM MODULE one of the program modules
1	1 PRIMARY EIA
ENTER	AUTOCALIBRATING READY! XX:YY
MEAS MODE	one of the measurement modes
1	1 ABSORBANCE MODE
MEAS PARAM or ENTER	FILTER 340 (default value)
MEAS PARAM or ENTER	one of the blanking possibilities
2	2 SINGLE WELL BLANK
MEAS PARAM or ENTER	BLANK WELL A1 (default value)
MEAS PARAM or ENTER	1 BL ON EVERY PLATE or
	2 RETAINED BLANK
1	1 BL ON EVERY PLATE
MEAS PARAM or ENTER	READY! XX:YY
CALC MODE	one of the calculation methods
9	9 POINT TO POINT
CALC PARAM or ENTER	NR OF STDS 2 (default value)
3	NR OF STDS 3
CALC PARAM or ENTER	NR OF REPL 1 (default value)
2	NR OF REPL 2
CALC PARAM or ENTER	STANDARD 1 0.000 (default value)

CALC PARAM or ENTER	STANDARD 2 0.000 (default value)
15	STANDARD 2 15
CALC PARAM or ENTER	STANDARD 3 0.000 (default value)
100	STANDARD 3 100
CALC PARAM or ENTER	1 STD ON EVERY PLATE or 2 RETAINED STANDARD
1	1 STD ON EVERY PLATE
CALC PARAM or ENTER	READY! XX:YY
SAVE	PROGRAM NUMBER X
1	PROGRAM NUMBER 1
ENTER	SAVING DATA (blinking)
	READY! XX:YY
PARAM	one of the general parameters
5	5 PRINTER OFF/ON
PARAM or ENTER	1 PRINTER OFF / 2 PRINTER ON
2	2 PRINTER ON
PARAM or ENTER	READY! XX:YY
START	MEASURING
	PRINTING (results are printed on the built-in printer)
	READY! XX:YY

Example 2.

Module 3, absorbance measurement at 450 nm. Blank on well A1. Floating cut off calculation with cut off equation (P+N)x0.5. Grey area 0.02. Interpretation + > -. Check out the printing: results sent to external printer.

Key to be pressed	Display/Procedure performed
	READY! XX:YY
SHIFT + ENTER	PROGRAM MODULE one of the program modules
3	3 cut off
ENTER	AUTOCALIBRATING READY! XX:YY
MEAS MODE	one of the measurement modes
1	1 ABSORBANCE MODE
MEAS PARAM or ENTER	FILTER 340 (default)
450	FILTER 450
MEAS PARAM or ENTER	one of the blanking procedures
2	2 SINGLE WELL BLANK
MEAS PARAM or ENTER	BLANK WELL A1
MEAS PARAM or ENTER	1 BLANK ON EVERY PLATE or 2 RETAINED BLANK
1	1 BLANK ON EVERY PLATE
MEAS PARAM or ENTER	READY! XX:YY
CALC MODE	one of the calculation modes
4	4 CUT OFF
CALC PARAM or ENTER	CUT OFF EQUATION PRESS ENTER
ENTER	
(, SHIFT, P, +, SHIFT, N,) x 0.5	(P+N)x0.5
ENTER	NO OF POS CTRL 1
2	NO OF POS CTRL 2
ENTER	POS CTRL 1 WELL A1
2, 1	WELL B1

ENTER	POS CTRL 2 WELL A1
3, 1	WELL C1
ENTER	NO OF NEG CTRL 1
2	NO OF NEG CTRL 2
ENTER	NEG CTRL 1 WELL A1
4, 1	WELL D1
ENTER	NEG CTRL 2 WELL A1
5, 1	WELL E1
ENTER	GREY AREA 0.000
0.02	GREY AREA 0.02
ENTER	INTERPRETATION 1 + > - or 2 - > +
1	1 + > -
ENTER	READY! XX:YY
PARAM	one of the general parameters
1	1 RS FORMAT
PARAM or ENTER	1 PRINTER FORMAT or 2 COMPUTER FORMAT or 3 OLD MCC FORMAT
1	1 PRINTER FORMAT
PARAM or ENTER	READY! XX:YY
PARAM	one of the general parameters
5	5 PRINTER OFF/ON
PARAM or ENTER	1 PRINTER OFF / 2 PRINTER ON
1	1 PRINTER OFF
PARAM or ENTER	READY! XX:YY
START	MEASURING
	SENDING DATA
	READY! XX:YY

Example 3.

Absorbance measurement at 405 nm. Blanking on well A1 (blank well only on the first plate). Cubic spline curve fit with 2 standards and 2 replicates (positions: B1, C1, D1, E1). Same standard curve used for other plates. Unit for standard concentrations mg/l. 2 plates are measured. Scale used is log/lin. External printer for recording of the results.

Key to be pressed	Display/Procedure performed
	READY! XX:YY
SHIFT + ENTER	PROGRAM MODULE one of the program modules
4	4 Cubic spline
ENTER	AUTOCALIBRATING READY! XX:YY
MEAS MODE	one of the measurement modes
1	1 ABSORBANCE MODE
ENTER	FILTER 340 (default)
405	FILTER 405
ENTER	one of the blanking procedures
2	2 SINGLE WELL BLANK
ENTER	BLANK WELL A1
ENTER	1 BLANK ON EVERY PLATE or 2 RETAINED BLANK
2	2 RETAINED BLANK
ENTER	READY! XX:YY
CALC MODE	one of the calculation modes
2	2 CUBIC SPLINE
ENTER	NO OF STDS 2 (default)
ENTER	NO OF STDS 1 (default)
2	NO OF REPL 2
ENTER	STANDARD 1 0.000
0.001	STANDARD 1 0.001
ENTER	STD 1 REPL 1 A1
B1	STD 1 REPL 1 B1
ENTER	STD 1 REPL 2 A1
C1	STD 1 REPL 2 C1
ENTER	STANDARD 2 0.000
1	STANDARD 2 1.000
ENTER	STD 2 REPL 1 A1
D1	STD 2 REPL 1 D1
ENTER	STD 2 REPL 2 A1
E1	STD 2 REPL 2 E1

ENTER	1 STD ON EVERY PLATE or 2 RETAINED STANDARD
2	2 RETAINED STANDARD
ENTER	one of the units
6	6 UNIT mg/l
ENTER	one of the scaling possibilities
3	3 SCALE LOG/LIN
ENTER	READY! XX:YY
Measurement of the first plate	
START	** MEASURING ** CALCULATING parameters, standard curve, concentrations are printed out
	1 ACCEPT RESULTS or 2 NEW FIT
2	2 NEW FIT
ENTER	one of the scaling possibilities
4	4 SCALE LOG/LOG
ENTER	PRESS PRINT
PRINT	SENDING CALCULATING
	1 ACCEPT RESULTS or 2 NEW FIT
1	1 ACCEPT RESULTS
ENTER	READY! XX:YY
Measurement of the second plate	
START	1 USE OLD BLANK or 2 NEW BLANK NOW
1	1 USE OLD BLANK
ENTER	1 USE OLD CURVE or 2 NEW CURVE NOW
1	1 USE OLD CURVE
ENTER	** MEASURING ** SENDING DATA CALCULATING
	1 ACCEPT RESULTS or 2 NEW FIT
1	1 ACCEPT RESULTS
ENTER	READY! XX:YY

Recalling a Program from the Memory of the Instrument

Program in example 1 was stored into the memory of the instrument with program number 1 and is now recalled from the memory of the instrument to be executed.

Key to be pressed	Display/Procedure performing
	READY ! XX:YY
RECALL	PROGRAM NUMBER X
1	PROGRAM NUMBER 1
ENTER	READY ! XX:YY
START	MEASURING (according to example 1)
	PRINTING
	READY ! XX:YY

Printer Suppression

The results are sent automatically via the RS-232C interface or via the parallel centronics interface when the built-in printer is suppressed. Secondary interface DIL switches 1, 2 and 3 determine which of the two interfaces is in use (For instructions about the interface system, see Appendix 2).

Key to be pressed	Display/Procedure performing
	READY ! XX:YY
PARAM	one of the general parameters
5	5 PRINTER ON / OFF
ENTER	1 PRINTER OFF or 2 PRINTER ON
1	1 PRINTER OFF
ENTER	READY ! XX:YY
	Now all results will be sent automatically via the interface.

Interface Connections

Serial RS-232 switch

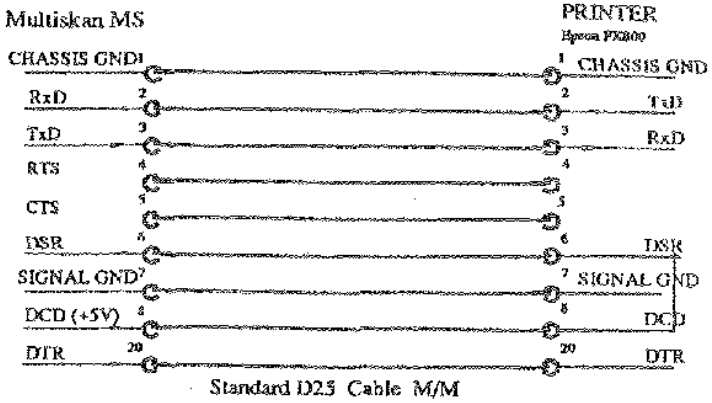

Standard D25 Cable M/M

Serial RS-232 switch

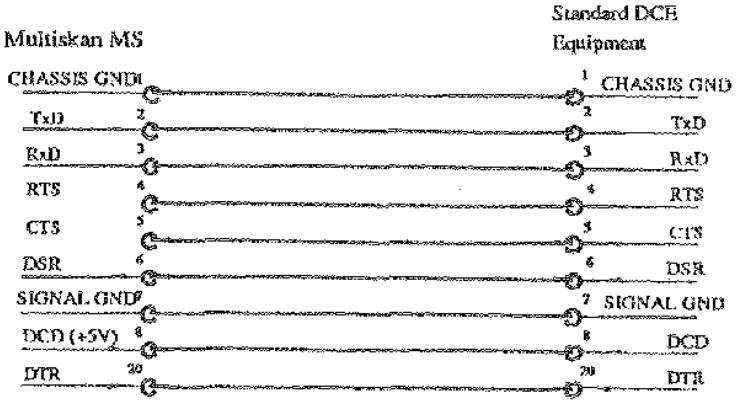

Serial RS-232 switch

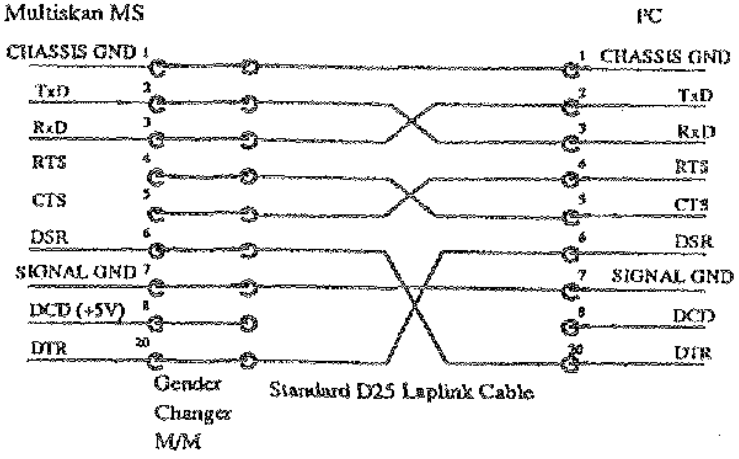

Serial RS-232 switch

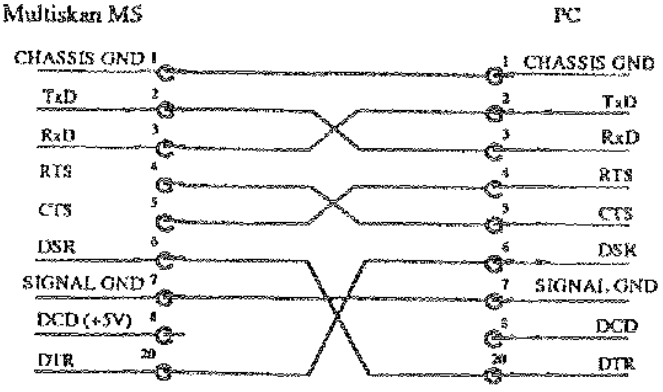

Cable 230 3840

Labsystems

... because science needs standards

Manufactured by

Labsystems Oy
P.O. Box 8
FIN-00881 Helsinki, Finland
Tel. +358-9-329 100
Telefax +358-9-3291 0415

Distributed by

LABSYSTEMS

Multiskan EX
Version 1.0

Operation manual

LABSYSTEMS
25.6.1997

Cat. no. 1507300

LABSYSTEMS MULTISKAN EX (type 355)

OPERATION MANUAL

CONTENTS

SAFETY SYMBOLS USED IN MULTISKAN EX

	Power ON
	Power OFF

WARNING MARKINGS USED IN THE DOCUMENTATION

	Caution, risk of personal injury to the operator or a safety hazard for the surrounding area.
	Caution, risk of damage to the instrument, other equipment or loss of performance or function in a specific application.

1. INSTALLATION

1.1 Unpacking

Unpack Multiskan® EX carefully and check for any damage that may have been caused during transportation. If any part is damaged or missing, contact the local Labsystems representative.

Keep the original package for future transportation.

1.2 Environmental Requirements

Locate Multiskan EX to avoid exposure to excess dust, vibrations, strong magnetic fields, direct sunlight, draft, excessive moisture or large temperature fluctuations.

Leave sufficient clearance (10 cm) at both sides of the unit for adequate air circulation.

1.3 Installation

Remove the two cover retaining screws (Fig.1:2) and lift up the cover.

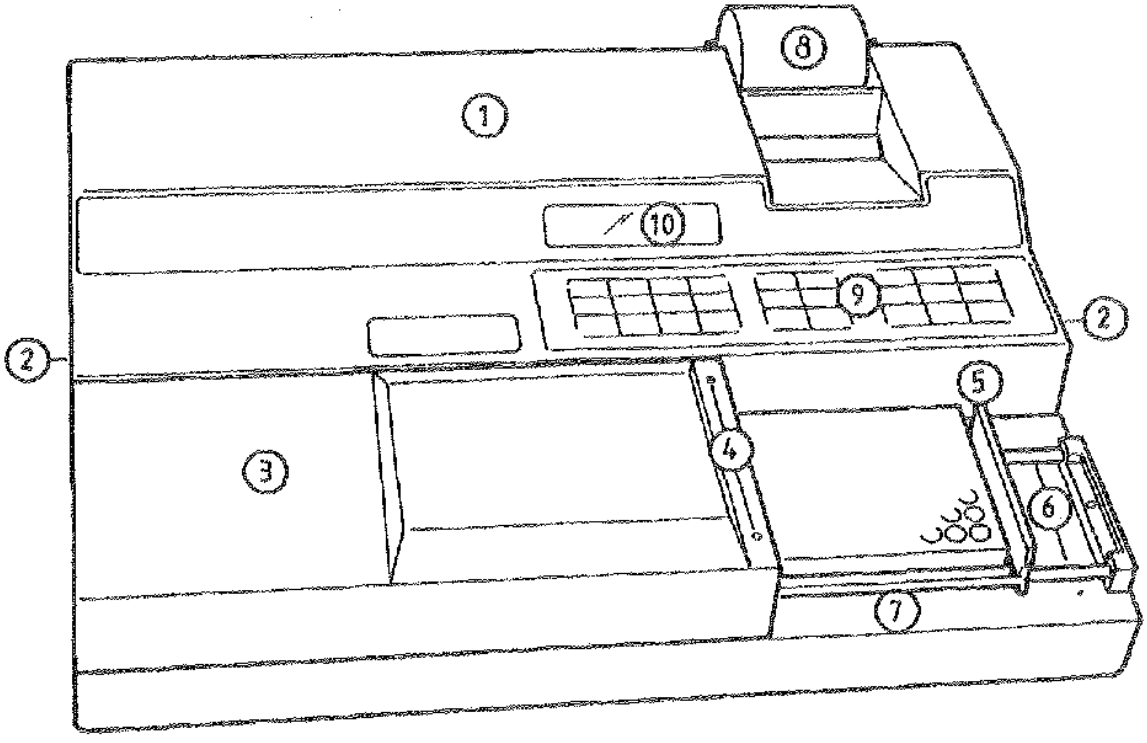

1. Instrument cover
2. Retaining screws of the instrument cover
3. Measuring assembly cover
4. Retaining screws of the measuring assembly cover
5. Plate carrier
6. Transfer rails
7. Track
8. Printer (option)
9. Keypad
10. Display

Figure 1. Multiskan EX

Unpack the filter wheel. Check that all filters are clean and undamaged. Place the wheel into the filter slot (Fig. 2:5) so that the toothed edge faces the rear of the instrument. A magnetic locking mechanism will automatically lock the wheel in the correct position and the optical filter position sensor will make sure that the correct filter is used during measurement.

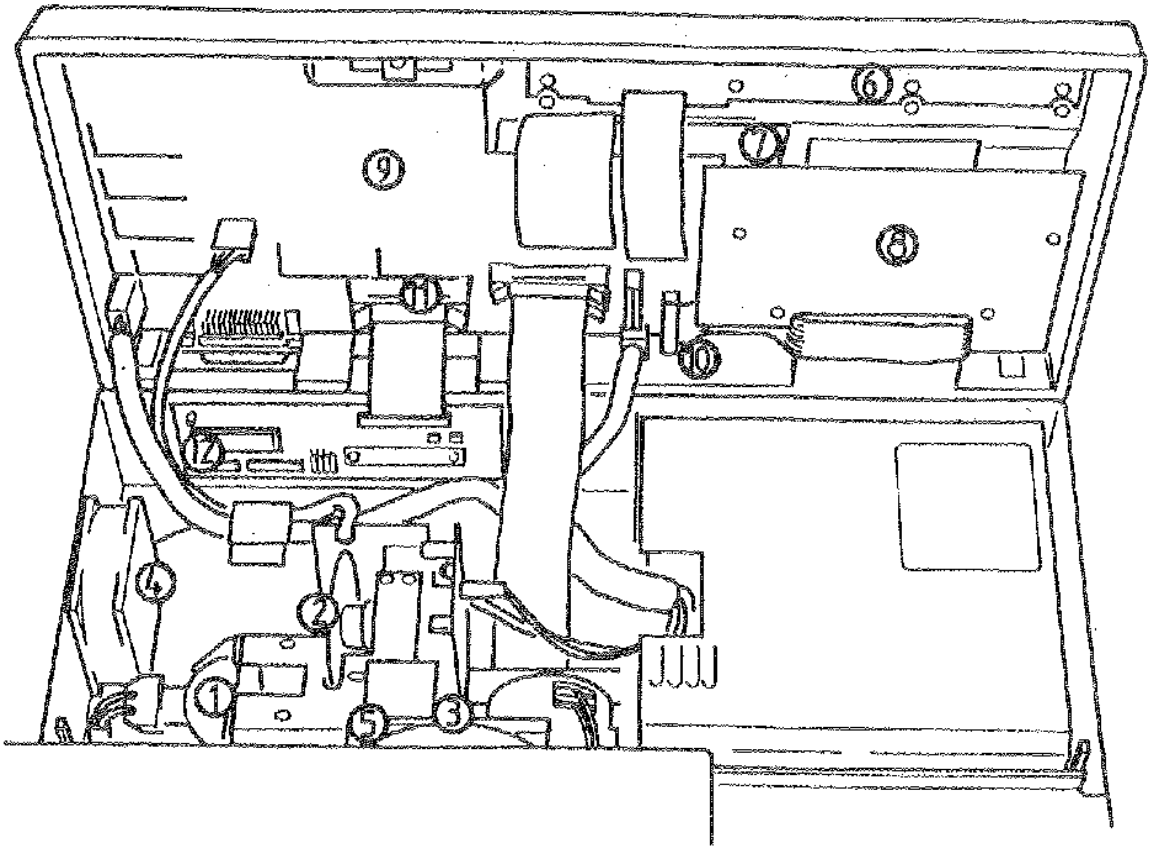

1. Lamp
2. Chopper
3. Filter
4. Fan
5. Filter wheel slot
6. NAPSU2 (keyboard) circuit board
7. LSD display circuit board
8. SCANPRI2 (printer) circuit board (option)
9. MUSCU/2A processor circuit board
10. Connector for built-in printer
11. Connector for Centronics interface, optional RS-232C interface or optional IEEE-488 interface
12. MUCEN circuit board

Figure 2. Multiskan EX internal view

Unpack the lamp. Fit the lamp contacts to the terminal socket inside the instrument (Fig.3).
Do not touch the reflective surface of the lamp or the bulb itself.
Place the lamp in its place (Fig. 2:1).

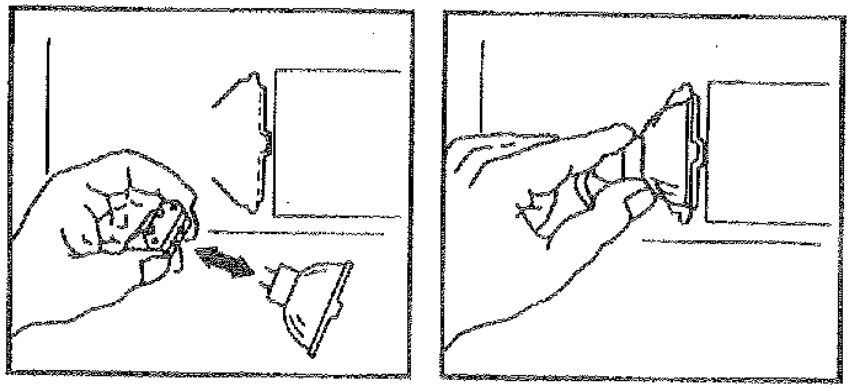

Figure 3. Installation of lamp

Check visually that there are no loose parts inside the instrument.

Close the instrument cover and replace the retaining screws.

Multiskan EX does not produce operating noise at a level which could cause a hazard. No sound level measurements are needed after installation.

Connect the mains supply cord to the mains power socket (Fig. 4:2). The power supply has automatic 100-120/ 200-240 VAC range selection. If a suitable mains supply cord is not provided, use only cords certified by the local authorities.

Connect the instrument to a correctly installed line power outlet which has a protective conductor also called as earth or ground.

CAUTION: **Interruption of the protective conductor inside or outside the instrument or disconnection of the protective conductor terminal may make the instrument dangerous.**

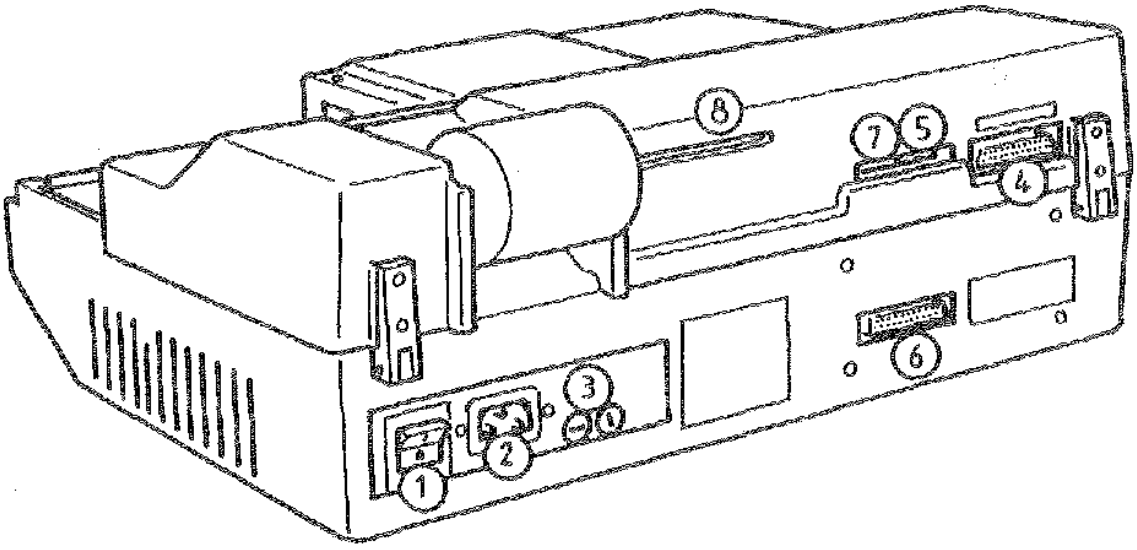

1. Power switch
2. Mains power socket
3. Fuses
4. RS-232C interface connector for a computer and a printer
5. Serial RS-232C DIL switches
6. Centronics interface connector
7. Secondary interface DIL switches
8. Slot for program card

Figure 4. Multiskan EX rear view

Connect computer or printer, if needed, according to requirements. For instructions about the interface system, see Appendix 2.

1.4 Transporting for Service

Repack the instrument according to instructions enclosed in the package. Use the original package. Indicate the fault. Inform about the use of hazardous materials.

2. FUNCTIONAL DESCRIPTION

2.1 Introduction

Multiskan EX is an eight-channel vertical light path filter photometer designed to perform both standard photometric and agglutination measurements.

There is a versatile built-in software available in Multiskan EX. It comprises several software packages (program modules). Each package is a combination of measurement and calculation modes.

Extended memory capacity is achieved by programmable program card.

The wavelength (400 - 750 nm or optional 340 - 750 nm) is selected using maximum eight high quality interference filters held in a filter wheel.

The readings can be processed via a serial RS-232C interface or via a parallel Centronics type printer interface. The optional built-in thermal printer provides also a record of the results.

2.2 Measurement Principle

2.2.1 Photometric Measurements

Multiskan EX utilizes the original Labsystems' concept of vertical photometry in which the light beam passes through the whole sample.

In vertical photometry, the absorption of light is proportional to the amount of light absorbing substance in the well.

Absorption is expressed by the following equation:

$$A = \frac{a}{S} m,$$

where A = absorbance, a = molar absorptivity of the substance, m = mass of absorbing substance and S = cross-sectional area perpendicular to the light path.

The advantages of the vertical light path measurement are:

(1) inaccurate pipetting of nonabsorbing liquids does not affect the measured absorbance values

(2) evaporation of nonabsorbing liquids during the reaction does not affect the measured absorbance values and

(3) a certain degree of inhomogeneity in the solution, for example as a result of layering in turbidity measurements, does not affect the results.

The optical system comprises the following components (Fig. 5a):

1 quartz-halogen lamp
2 chopper wheel
3 aperture and condenser lens
4 semi-transparent mirror
5 aperture
6 interference filter (filter wheel)
7 optical fibre bundle
8 focusing lenses
9 upper lenses and detectors

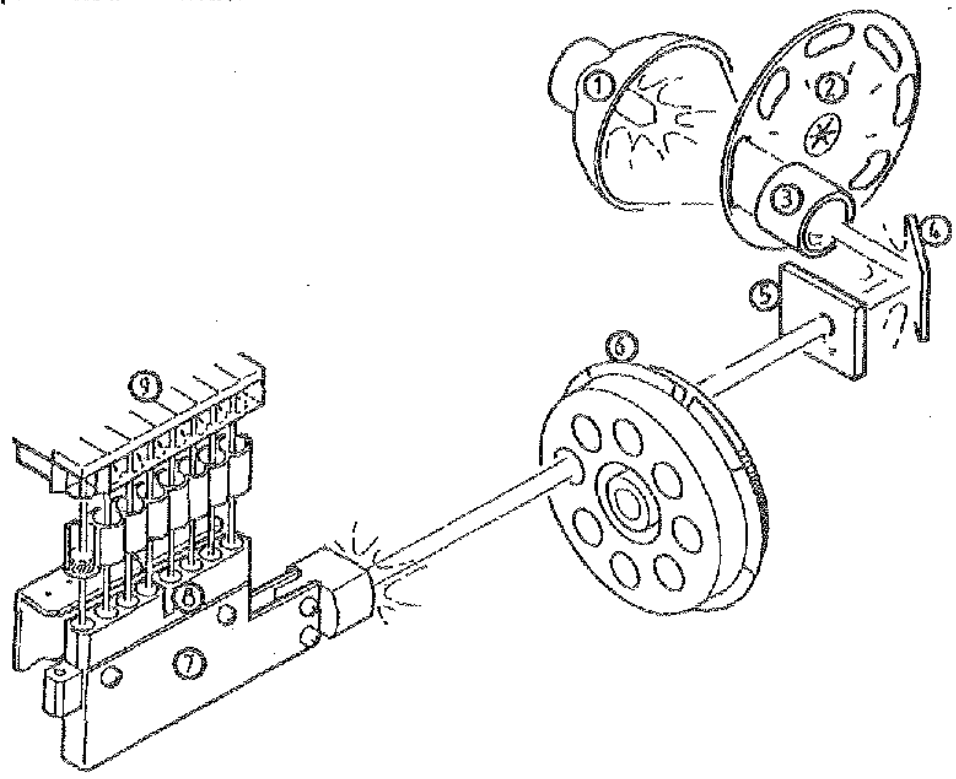

Figure 5a. Optical system

Light source:

The light source is a quarz-halogen lamp (Osram 64607, 8V/50W), which is equipped with an aluminium-coated elliptical reflector.

To prolong the service life of the lamp, the instrument should be switched off when not in use. Warming-up period of 1 minute has to be allowed before measuring.

Chopper wheel:

The chopper wheel chops the light beam to minimize electronic noise.

Semi-transparent mirror:

After passing through the condenser lens the light beam impinges on the semi-transparent mirror. Part of the visible light and all longer wavelengths pass through the mirror, and the UV and the rest of the visible light is reflected. This arrangement eliminates heating of the interference filter and evens out the spectral intensity distribution.

Interference filter:

The wavelength is selected from 1 - 8 filters held in the filter wheel.

Fibre bundle:

After passing through the interference filter, the light beam reaches the common end of the fibre bundle, which divides the beam into eight equal parallel beams and deflects the beams upwards.

Focusing lenses:

After being divided the light passes through a focusing system of eight lenses.

Detectors:

The light beams pass through the bottoms of the wells through the samples via upper lenses to the detectors, which measure the intensity of light.

2.2.2 Agglutination Measurements (optional)

Agglutination measurements are performed by using special optics (pinhole optics) (Fig. 5b). The instrument scans over each well taking up to 20 readings. Readings are then down-loaded to a P.C. for further interpretation.

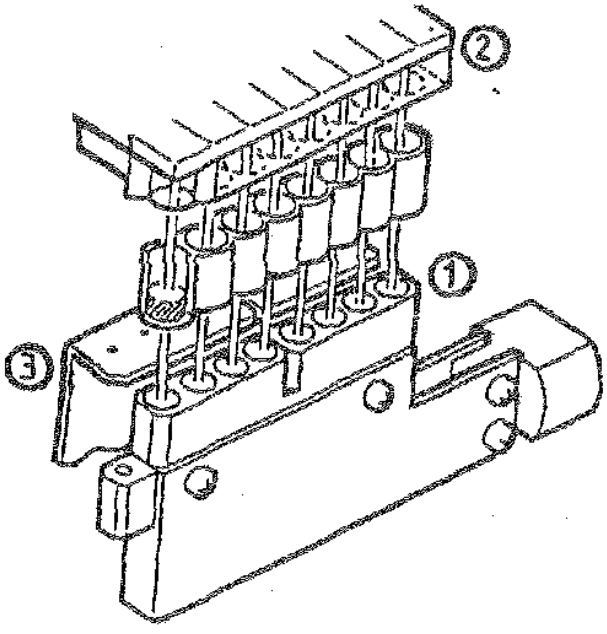

1. Focusing lenses
2. Upper lenses and detectors
3. Pinhole plate (optional)

Fig. 5b. Agglutination optics

2.3 Instrument Layout

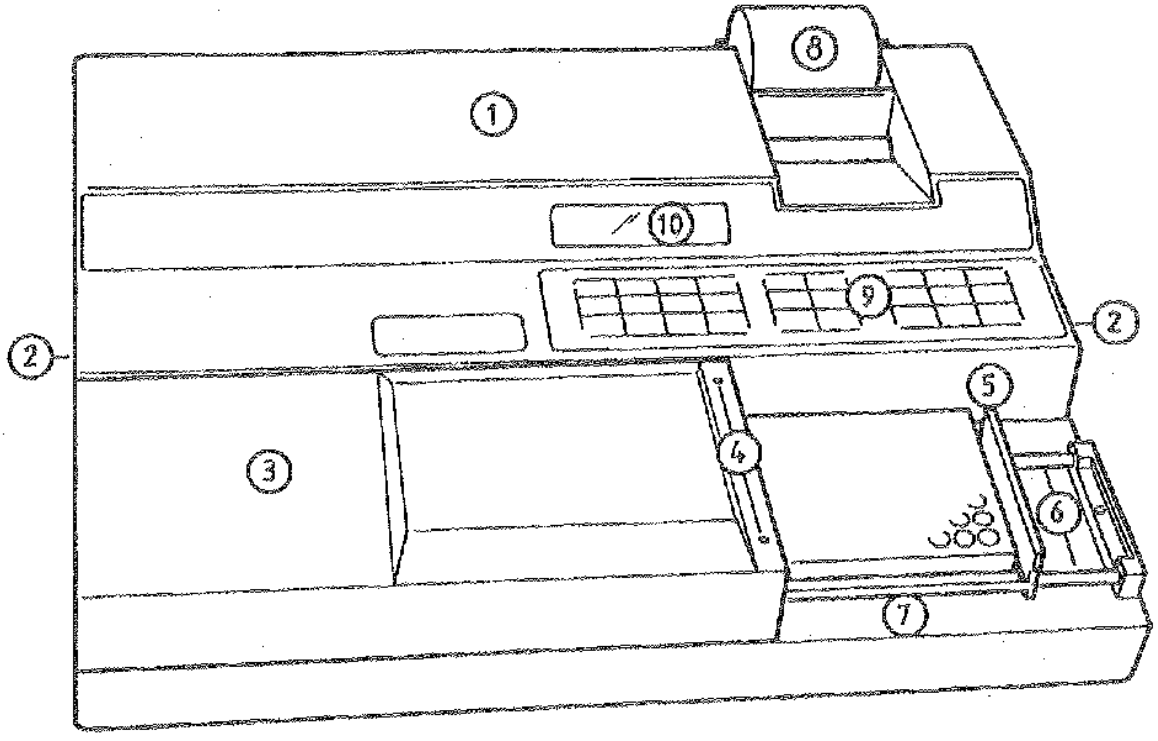

1. Instrument cover
2. Retaining screws of the instrument cover
3. Measuring assembly cover
4. Retaining screws of the measuring assembly cover
5. Plate carrier
6. Transfer rails
7. Track
8. Printer (optional)
9. Keypad
10. Display

Figure 6. Multiskan EX

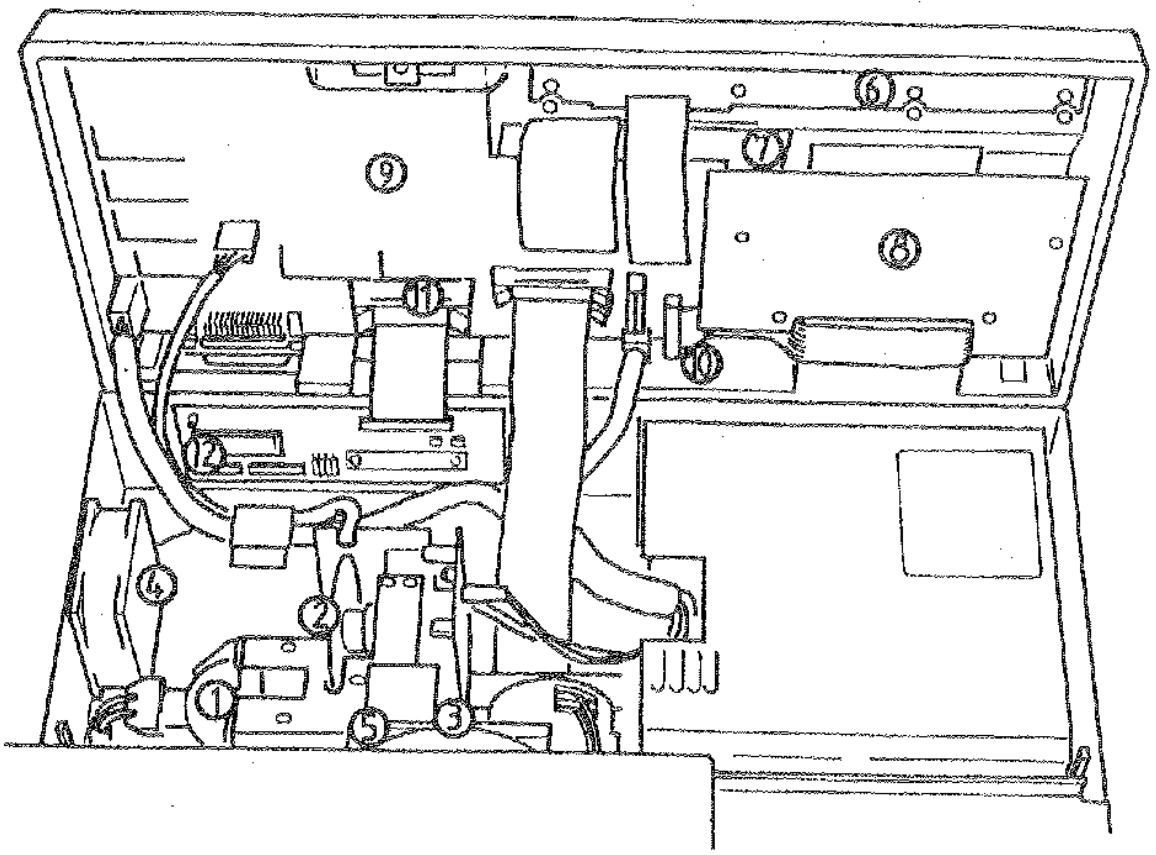

1. Lamp
2. Chopper wheel
3. Filter
4. Fan
5. Filter wheel slot
6. NAPSU 2 (keyboard) circuit board
7. LCD display circuit board
8. SCANPRI 2 (printer) circuit board (optional)
9. MUSCU 2A processor circuit board
10. Connector for built-in printer
11. Connector for Centronics interface, optional RS-232C interface or optional IEEE-488 interface
12. MUCEN circuit board

Figure 7. Multiskan EX internal view

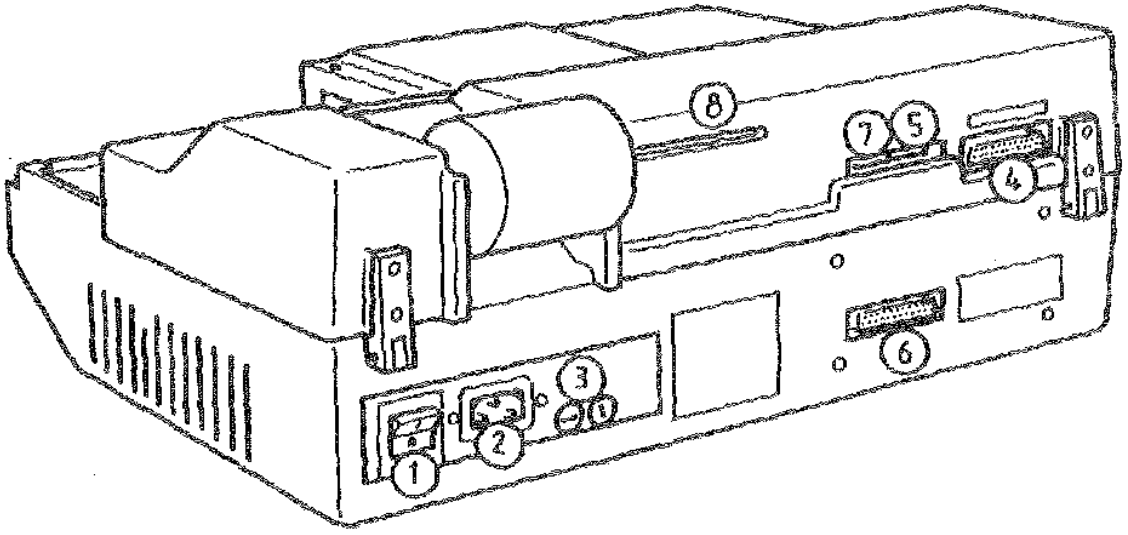

1. Power switch
2. Mains power socket
3. Fuses
4. RS-232C interface connector for a computer or a printer
5. Serial RS-232C DIL switches
6. Centronics interface connector
7. Secondary interface DIL switches
8. Slot for program card

Figure 8. Multiskan EX rear view

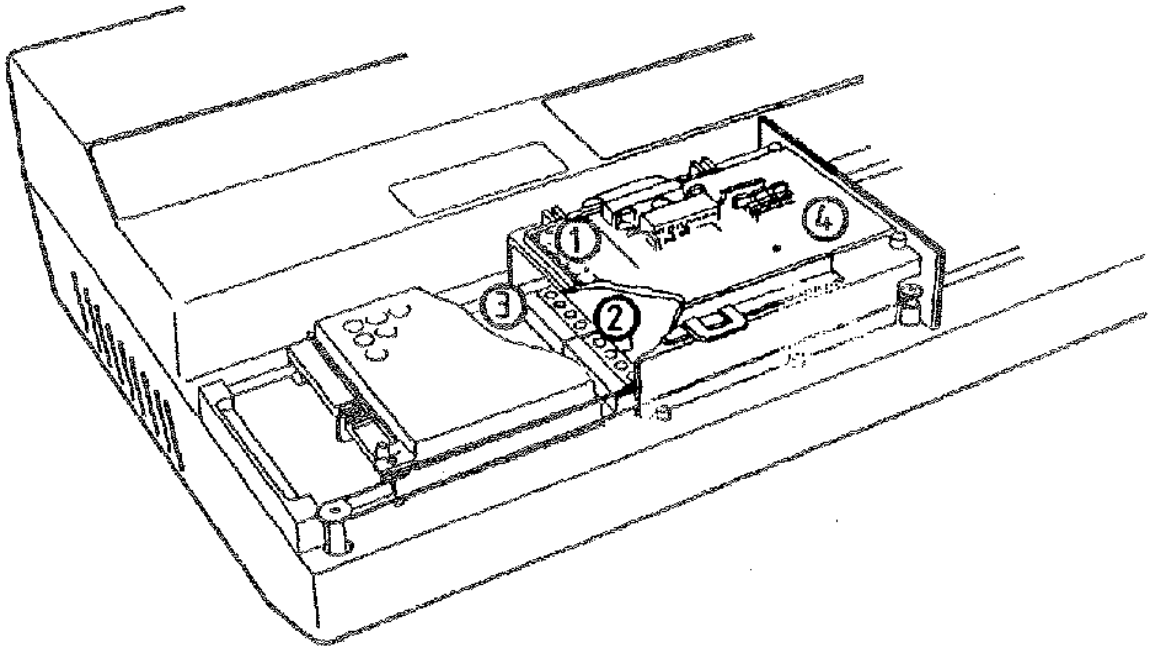

1. Detectors
2. Focusing lenses
3. Pin hole plate (optional)
4. MACU circuit board

Figure 9. Measuring assembly

2.4. Keypad

Keypad of Multiskan EX comprises 30 keys with click action switches:

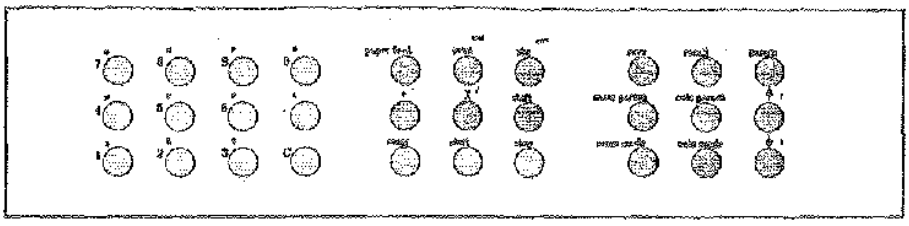

Figure 10. Multiskan EX keypad

0-9 A-H }:	for entering numeric values and microplate positions
P, N, L:	symbols of positive (P), negative (N) or low positive (L) controls to be used in cut off equation
. :	decimal point
CLEAR:	for correcting data before entering it
PRINT$_{SEND}$, ABS$_{CONC}$:	absorbances and concentrations are printed out on the built-in printer or sent out via the selected interface
PAPER FEED:	feeds paper from the roll of the built-in or external printer
+ - x /:	operators for cut off equation
SHIFT:	for taking symbols at the upper right corner of the key into use
ENTER:	for entering modes and parameters
START:	measurement is started
STOP:	microplate is ejected, instrument returns to the previous logical state
SAVE:	user determined programs can be stored into the memory of the instrument
RECALL:	programs earlier stored can be recalled
MEAS MODE:	measurement mode is selected
MEAS PARAM:	measurement parameters are entered
CALC MODE:	calculation mode is selected
CALC PARAM:	calculation parameters are entered
PARAM:	general parameters (e.g. RS-format, plate movement) are selected
↑ (:	arrow: for going backwards in the list of the modes or parameters and changing the clock display, parenthesis: for entering cut-off equation
↓) :	arrow: for going forwards in the list of the modes or parameters and changing the clock display, parenthesis: for entering cut-off equation

2.5 Program Modules

Multiskan EX software comprises program modules, software packages which are combinations of measurement and calculation modes.

The following program modules are available:

1. Primary EIA software
2. Agglutination software (optional)
3. Cut off software (optional)
4. Cubic spline software (optional)

Module 1: Primary EIA

This software is a basic software to perform EIA measurements. It includes the following measurement modes: absorbance, dual wavelength, two point, kinetic, multivawelength mode and computer control.

The following calculation modes can be selected: factor, linear standard, standard line, limit, double limit, range, column subtraction and point to point calculation.

Module 2: Agglutination software (optional)

This module enables agglutination measurements. A special optics (pinhole optics) is taken into use. 20 readings are taken per each well. Results are sent via interface for further processing.

Module 3: Cut off software (optional)

There are different cut off calculations available in this module: double limit, range, fixed cut off and floating cut off.

Module 4: Cubic spline (optional)

Measurement modes: available are absorbance, dual wavelength, two point and kinetic.
Calculation mode: available is cubic spline.

Changing between modules occurs by first pressing the SHIFT key and then the ENTER key.

2.6 Program Card (optional)

More memory capacity is offered by a programmable program card which can be plugged-in to the instrument.

Cards are programmed by Labsystems upon request.

3. OPERATION

3.1 How to Get Started

Switch the instrument on using the power switch at the rear of the instrument (Figure 8:1). Primary EIA, software version number and AUTOCALIBRATION are displayed followed by PRIMARY EIA, READY and the time. In autocalibration procedure the instrument selects the proper light intensity for each installed filter. When the instrument is switched on, wait 1 minute for warming up.

When switching the instrument on, module 1 and its parameters (single wavelength absorbance measurement, no calculation, filter n:o 1, continuous plate movement, plate analysis off and printer format) are selected.

3.2 Inserting the Paper Roll (printer option)

Remove the piece of paper which has been set under the printing system during transportation by pressing the PAPER FEED key.

Insert the free end of the paper roll into the slot at the rear of the instrument until a slight resistance is felt. Note the correct direction of rotation of the roll.

Press the PAPER FEED key until paper is fed through the printer. Insert the shaft into the paper roll. Slide the roll with the shaft into the guides at the rear of the instrument.

Always make sure that there is sufficient paper in the printer. Never use the printer without paper.

3.3 Measuring

Select the program module by pressing first the SHIFT key and then the ENTER key. Select 1 PRIMARY software, 2 agglutination software (optional), 3 cut off software (optional) or 4 cubic spline software (optional). After entering into module, AUTOCALIBRATION is performed. In each module select the required measurement mode and parameters and calculation mode and parameters. Press START key to measure. After measurement, the results are sent to the built-in printer or via the interface.

3.3.1 Module 1: Primary EIA Software

Select the measurement mode and calculation mode before starting the measurement.

Measurement mode is selected with the MEAS MODE key. The list of measurement modes can be scrolled forwards and backwards with the arrow keys. The desired mode can also be selected directly by the number keys.

Measurement parameters are selected with the MEAS PARAM or ENTER key. The arrow and number keys are used for entering new values for parameters. Default value or earlier selected value is selected by pressing the ENTER or MEAS PARAM key.

The following measurement modes can be selected in module 1:

1	ABSORBANCE:	Absorbances are measured at one wavelength.
2	DUAL WAVELENGTH:	Absorbances are measured using two wavelengths: Results of the second measurement are subtracted from results of the first measurement.
3	TWO POINT:	Absorbances of the plate are measured at two separate points in time. Results of the first measurement are subtracted from results of the second measurement.
4	KINETIC:	Rates of absorbance change are measured.
5	MULTI WAVELENGTH:	Absorbances are measured using individual filter selection for each column of a microplate.
6	COMPUTER CONTROL:	Instrument is controlled by an external computer.

The following measurement parameters can be selected:

FILTER: In measurement modes 1, 2, 3, 4 and 5. Enter the wavelength(s) of the filter(s) or the filter number(s) (see 8 FILTER WHEEL from section 3.6 General parameters).

BLANKING POSSIBILITIES: The following blanking possibilities are available in modes 1, 2, 3, 4 and 5:

1 NO REAGENT BLANK

2 SINGLE WELL REAGENT BLANK
- blank well is entered

3 COLUMN MEAN BLANK
- blank column (1-12) is entered
- average of the blank values (8) of the column is used

4 COLUMN BLANK
- blank column (1-12) is entered
- each row will have an individual blank value which is used

5 ROW MEAN BLANK
- blank row (A-H) is entered
- average of the blank values (12) of the row is used

6 ROW BLANK
- blank row (A-H) is entered
- each column will have an individual blank value which is used

1 BL ON EVERY PL / 2 RETAINED BLANK: Blanking on every plate (1 BL ON EVERY PL) or retained blank (2 RETAINED BLANK, blank value of a former plate is used) can also be selected. If retained blank is selected, 1 USE OLD BLANK / 2 NEW BLANK NOW will be asked before reading the next plate.

1 END RESULTS / 2 ALL RESULTS: In modes 2, 3 and 4 final results (e.g. absorbance differences) or also intermediate results (e.g. absorbances with filter 1 and filter 2) can be selected.

INTERVAL TIME: Time between successive measurements of the plate. Minimum interval time is 5 s, maximum 17 h 59 min 59 s. INTERVAL TIME parameter can be selected in modes 3 and 4. Enter the interval time as HH.MM.SS, (HH = hours, MM = minutes, SS = seconds).

NOTE: When the kinetic measurement and ALL RESULTS are selected and results are transmitted via the RS-232C interface, the actual minimum interval time is dependent on the baud rate used: the lower the baud rate, the slower the intermediate results are transmitted. This means that the interval time has to be long enough for the instrument to be able to transmit the intermediate results during the selected interval time.

Example: With baud rate 4800 the minimum interval time is 6-7 depending on the printer used.

LAG TIME: Time before measurement is started. Minimum lag time is 0 s, maximum 17 h 59 min 59 s. LAG TIME parameter can be selected in mode 4. Enter the lag time as HH.MM.SS, (HH = hours, MM = minutes, SS = seconds).

TOTAL TIME: Time during which the reaction is followed.
Minimum total time is 5 s, maximum 17 h 59 min 59 s.
TOTAL TIME parameter can be selected in mode 4.
Enter the total time as HH.MM.SS, (HH = hours, MM = minutes, SS = seconds).

Any of the calculation modes can be applied to results from any of the measurement modes. Calculation mode/modes can be selected before or after the measurement is done.
The PRINT, ABS and SHIFT keys allow the results to be obtained later from earlier measured values.
The latest selected calculation mode is used until changed.

Calculation mode is selected with the CALC MODE key. The list of calculation modes can be scrolled forward and backward with the arrow keys.

Calculation parameters are selected with the CALC PARAM or ENTER key. The arrow or number keys are used for entering new values for parameters. Default value or earlier determined value is selected by pressing the ENTER or CALC PARAM key.

The following calculation modes and their parameters can be selected in module 1:

1 NO CALCULATION: Results are sent as absorbances to built-in printer or via the interface.

2 FACTOR CALCULATION: Measured absorbances are multiplied with a factor given by the user to get concentrations. The concentration unit is defined by the unit of the factor. Concentration is calculated according to the following equation:
Concentration = FACTOR x absorbance.
The measurement parameters, calculation parameters and calculated concentrations are sent to the built-in printer or via the interface.

Parameter: FACTOR.

3 LINEAR STANDARD: The user enters the concentrations of the standards and Multiskan EX calculates a standard line with the help of these standards using the method of least squares. Measured absorbances are converted to concentration units by the use of this line. The measurement parameters, calculation parameters and concentrations obtained are sent to the built-in printer or via the interface.

Parameters:
Number of standards (NR OF STDS)
Number of replicates (NR OF REPL)
Standard concentrations
(STANDARD 1) etc.
Standard locations
(STANDARD 1 REPL 1 A1) etc.

Up to 8 standard solution can be incorporated on the plate in up to 3 replicates.

1 STD ON EVERY PLATE / Standard on every plate (1 STD ON EVERY PLATE) or

2 RETAINED STD retained standard (2 RETAINED STD, standard curve of the former plate is used) can be selected. If retained standard is selected 1 USE OLD LINE / 2 NEW LINE NOW will be asked before reading the next plate.

4 STANDARD LINE:

The user can define the standard line by entering the slope and the intercept by using the known standard line. Multiskan EX calculates the concentrations with the following equation:

absorbance = A x concentration + B

where A = slope like in linear standard mode.

B = intercept

$$\text{concentration} = \frac{1}{A} \times \text{absorbance} - \frac{B}{A}$$

The measurement parameters, calculation parameters and concentrations obtained are sent to the built-in printer or via the interface.

Parameters: LINE SLOPE.
INTERCEPT.

5 LIMIT CALCULATION:

The measurement absorbance values are compared with a limit value defined by the user. If the result is lower than the set limit, negative sign (-) is sent, otherwise a positive sign (+). The measurement parameters, calculation parameters and results in +/- matrix are sent to the built-in printer or via the interface

Parameters: Limit value (LIMIT) (0.000-2.000).

6 DOUBLE LIMIT:

The measured absorbance values are compared with two limit values defined by the user. If the result is lower than the lower limit, a negative sign (-) is sent. If the result is between the two limit values, 0 is sent. If the result is higher than the upper limit, positive sign (+) is sent. The measurement parameters, calculation parameters and results in -/0/+ matrix are sent to the build-in printer or via the interface.

Parameters:
Low limit value (LOW LIMIT) (0.000-2.000).
High limit value (HIGH LIMIT) (0.001-2.000).

7 RANGE CALCULATION:

Range value defined by the user is divided into ten equal segments. Segments are numbered from 0 to 9. The measured absorbance value is represented by one of those numbers depending on which segment it lies in. The measurement parameters, calculation parameters and matrix where the results are shown by segment numbers (0...9) are sent to the built-in printer or via the interface.

Parameters: Range value (RANGE) (0.000-2.000).

Example: If an absorbance range 1.5 is set, the segments are as below:

Segment	Measured absorbance value in range	Printout
1	$A \leq 0.150$	0
2	$0.150 < A \leq 0.300$	1
3	$0.300 < A \leq 0.450$	2
4	$0.450 < A \leq 0.600$	3
5	$0.600 < A \leq 0.750$	4
6	$0.750 < A \leq 0.900$	5
7	$0.900 < A \leq 1.050$	6
8	$1.050 < A \leq 1.200$	7
9	$1.200 < A \leq 1.350$	8
10	$1.350 < A \leq 1.500$	9

8 COLUMN SUBTRACTION: Results of column 1 are subtracted from results of column 2, results of column 3 are subtracted from results of column 4, etc. or vice versa. The measurement parameters, calculation parameters and absorbance differences of every other column are sent to the built-in printer or via the interface.

Parameter: 1-2 3-4... or
2-1 4-3...

9 POINT TO POINT: The user enters the concentrations of the standards and Multiskan EX calculates a piece wise linear standard curve with the help of these standards. Measured absorbances are converted to concentration units by the use of this curve. The measurement parameters, calculation parameters and concentrations obtained are sent to the built-in printer or via the interface.

If the piece wise linear standard curve is not monotonous, the text NON-MONOTONOUS curve will be printed and the results are incorrect.

Parameters:
Number of standards (NR OF STDS)
Number of replicates (NR OF REPL)
Standard concentrations
(STANDARD 1) etc.
Standard locations
(STANDARD 1 REPL 1 A1) etc.

Up to 8 standard solutions can be incorporated on the plate in up to 3 replicates.

1 STD ON EVERY PLATE / Standard on every plate (1 STD ON EVERY PLATE) or

2 RETAINED STD retained standard (2 RETAINED STD, standard curve of the former plate is used) can be selected. If retained standard is selected 1 USE OLD LINE / 2 NEW LINE NOW will be asked before reading the next plate.

3.3.2 Module 2: Agglutination Software (optional)

Connect Multiskan EX to computer. Enter to module 2 in Multiskan EX. Choose the filter, blanking and parameters. Start computer control from computer. Start the measurement. 20 readings/well will be taken and sent to the computer.

3.3.3 Module 3: Cut-off Software (optional)

The following measurement modes are available in module 3:

1 ABSORBANCE: Absorbances are measured at one wavelength.

2 DUAL WAVELENGTH: Absorbances are measured using two wavelengths:
Results of the second measurement are subtracted from results of the first measurement.

3 TWO POINT: Absorbances of the plate are measured at two separate points in time. Results of the first measurement are subtracted from the results of the second measurement.

4 KINETIC: Rates of absorbance change are measured.

The following measurement parameters can be selected:

FILTER:

In measurement modes 1, 2, 3 and 4. Enter the wavelength(s) of the filter(s) or the filter number(s) (see 7 FILTER WHEEL from section 3.6 General parameters).

BLANKING POSSIBILITIES:

The following blanking possibilities are available in modes 1, 2, 3 and 4:

1 NO REAGENT BLANK

2 SINGLE WELL REAGENT BLANK
- blank well is entered

3 COLUMN MEAN BLANK
- blank column (1-12) is entered
- average of the blank values (8) of the column is used

4 COLUMN BLANK
- blank column (1-12) is entered
- each row will have an individual blank value which is used

5 ROW MEAN BLANK
- blank row (A-H) is entered
- average of the blank values (12) of the row is used

6 ROW BLANK
- blank row (A-H) is entered
- each column will have an individual blank value which is used

1 BL ON EVERY PL /
2 RETAINED BLANK:

Blanking on every plate (1 BL ON EVERY PL) or retained blank (2 RETAINED BLANK, blank value of a former plate is used) can also be selected. If retained blank is selected, 1 USE OLD BLANK / 2 NEW BLANK NOW will be asked before reading the next plate.

1 END RESULTS /
2 ALL RESULTS:

In modes 2, 3 and 4 final results (e.g. absorbance differences) or also intermediate results (e.g. absorbances with filter 1 and filter 2) can be selected.

INTERVAL TIME:

Time between successive measurements of the plate. Minimum interval time is 5 s, maximum 100 min. INTERVAL TIME parameter can be selected in modes 3 and 4. Enter the interval time as XX.YY, (XX = minutes, YY = seconds).

NOTE:

When the kinetic measurement and ALL RESULTS are selected and results are transmitted via the RS-232C interface, the actual minimum interval time is dependent on the baud rate used: the lower the baud rate, the slower the intermediate results are transmitted. This means that the interval time has to be long enough for the instrument to be able to transmit the intermediate results during the selected interval time.

Example: With baud rate 4800 the minimum interval time is 6-7 depending on the printer used.

LAG TIME:

Time before measurement is started. Minimum lag time is 0 s, maximum 100 min. LAG TIME parameter can be selected in mode 4. Enter the lag time as XX.YY, (XX = minutes, YY = seconds).

TOTAL TIME:

Time during which the reaction is followed.
Minimum total time is 5 s, maximum 100 min.
TOTAL TIME parameter can be selected in mode 4.
Enter the total time as XX. YY, (XX = minutes, YY = seconds).

The following calculation modes and calculation parameters can be selected in module 3:

1 NO CALCULATION

Results are sent as absorbances to built-in printer or via the interface.

2 DOUBLE LIMIT

The measured absorbance values are compared with two limit values defined by the user. If the result is lower than the lower limit, a negative sign (-) is sent. If the result is between the two limit values, 0 is sent. If the result is higher than the upper limit, positive sign (+) is sent. The measurement parameters, calculation parameters and results in -/0/+ matrix are sent to the build-in printer or via the interface.

Parameters:
Low limit value (LOW LIMIT) (0.000-2.000).
High limit value (HIGH LIMIT) (0.001-2.000).

3 RANGE CALCULATION:

Range value defined by the user is divided into ten equal segments. Segments are numbered from 0 to 9. The measured absorbance value is represented by one of those numbers depending on which segment it lies in. The measurement parameters, calculation parameters and matrix where the results are shown by segment numbers (0...9) are sent to the built-in printer or via the interface.

Parameters: Range value (RANGE) (0.000-2.000).

Example: If an absorbance range 1.5 is set, the segments are as below:

Segment	Measured absorbance value in range	Printout
1	$A \leq 0.150$	0
2	$0.150 < A \leq 0.300$	1
3	$0.300 < A \leq 0.450$	2
4	$0.450 < A \leq 0.600$	3
5	$0.600 < A \leq 0.750$	4
6	$0.750 < A \leq 0.900$	5
7	$0.900 < A \leq 1.050$	6
8	$1.050 < A \leq 1.200$	7
9	$1.200 < A \leq 1.350$	8
10	$1.350 < A \leq 1.500$	9

4 CUT-OFF

The measured absorbance value is compared with a cut off value calculated with the aid of a cut off equation using measured absorbances of positive or negative controls.

Parameters:

CUT OFF EQUATION	enter the equation with the aid of (,), +, -, x, /, P, L and N keys Example: (P+N)x0.5
NO OF POS CONTROL	enter the number of positive controls
POS CONTROL A1	enter the positions of positive, negative or low positive controls
NO OF NEG CONTROL NEG CONTROL A1	See pos control above
NO OF LOW POS CONTROL LOW POS CONTROL A1	See pos control above
GREY AREA	enter the absorbance range where the results obtained are doubtiful; results inside grey area are presented with 0

INTERPRETATION	1 + > - 2 - > +	Interpretation of results is chosen: 1 + > -: results above cut off value are presented with +, results below cut off are presented with - 2 - > +: results above cut off value are presented with -, results below it are presented with +

3.3.4 Module 4: Cubic Spline (optional)

The following measurement modes are available in module 4:

1	ABSORBANCE:	Absorbances are measured at one wavelength.
2	DUAL WAVELENGTH:	Absorbances are measured using two wavelengths: Results of the second measurement are subtracted from results of the first measurement.
3	TWO POINT:	Absorbances of the plate are measured at two separate points in time. Results of the first measurement are subtracted from the results of the second measurement.
4	KINETIC:	Rates of absorbance change are measured.

The following measurement parameters can be selected:

FILTER:

In measurement modes 1, 2, 3 and 4. Enter the wavelength(s) of the filter(s) or the filter number(s) (see 7 FILTER WHEEL from section 3.6 General parameters).

BLANKING POSSIBILITIES:

The following blanking possibilities are available in modes 1, 2, 3 and 4:

1 NO REAGENT BLANK

2 SINGLE WELL REAGENT BLANK
- blank well is entered

3 COLUMN MEAN BLANK
- blank column (1-12) is entered
- average of the blank values (8) of the column is used

4 COLUMN BLANK
- blank column (1-12) is entered
- each row will have an individual blank value which is used

5 ROW MEAN BLANK
- blank row (A-H) is entered
- average of the blank values (12) of the row is used

6 ROW BLANK
- blank row (A-H) is entered
- each column will have an individual blank value which is used

1 BL ON EVERY PL /
2 RETAINED BLANK:

Blanking on every plate (1 BL ON EVERY PL) or retained blank (2 RETAINED BLANK, blank value of a former plate is used) can also be selected. If retained blank is selected, 1 USE OLD BLANK / 2 NEW BLANK NOW will be asked before reading the next plate.

1 END RESULTS /
2 ALL RESULTS:

In modes 2, 3 and 4 final results (e.g. absorbance differences) or also intermediate results (e.g. absorbances with filter 1 and filter 2) can be selected.

INTERVAL TIME: Time between successive measurements of the plate. Minimum interval time is 5 s, maximum 100 min. INTERVAL TIME parameter can be selected in modes 3 and 4. Enter the interval time as XX.YY, (XX = minutes, YY = seconds).

NOTE: When the kinetic measurement and ALL RESULTS are selected and results are transmitted via the RS-232C interface, the actual minimum interval time is dependent on the baud rate used: the lower the baud rate, the slower the intermediate results are transmitted. This means that the interval time has to be long enough for the instrument to be able to transmit the intermediate results during the selected interval time.

Example: With baud rate 4800 the minimum interval time is 6-7 depending on the printer used.

LAG TIME: Time before measurement is started. Minimum lag time is 0 s, maximum 100 min. LAG TIME parameter can be selected in mode 4. Enter the lag time as XX.YY, (XX = minutes, YY = seconds).

TOTAL TIME: Time during which the reaction is followed.
Minimum total time is 5 s, maximum 100 min.
TOTAL TIME parameter can be selected in mode 4.
Enter the total time as XX. YY, (XX = minutes, YY = seconds).

The following calculation modes and calculation parameters can be selected in module 4:

1 NO CALCULATION — Results are sent as absorbances to built-in printer or via the interface.

2 CUBIC SPLINE — Cubic spline is a sigmodial curve used for example with hormones and tumour markers.

Parameters:

NO OF STDS	2	2 to 8 Standards is allowed.
NO OF REPL	1	1 to 3 replicates is allowed.
STANDARD 1	0.000	Enter concentration of standard 1.
STANDARD 1 REPL 1	A1	Enter location(s) of standard 1.
STANDARD 2	0.000	Enter concentration of standard 2.
STANDARD 2 REPL 1	A1	Enter location(s) of standard 2.

STANDARD ON EVERY PLATE or RETAINED STANDARD

1 UNIT — no unit, U/l, IU/l, mIU/l, g/l, mg/l, mg/dl, µg/l, µg/ml, ng/ml, mmol/l, µmol/l, nmol/l

1 scale	LIN/LIN
2 scale	LIN/LOG
3 scale	LOG/LIN
4 scale	LOG/LOG

After measurement and data transfer it is asked if the results are accepted or if a new fit is required:

1 ACCEPT RESULTS
2 NEW FIT

If results are accepted, the instrument goes to READY state. If a new fit is required, new scale parameters have to be selected and the PRINT key pressed. The new results will be interfaced. In case retained standard is used

1 USE OLD CURVE

2 NEW CURVE NOW — is asked to be selected.

3.4 Computer control

In modules 1 and 2 an external computer can be used to substitute the keypad use of Multiskan EX.

The computer control occurs via the RS-232C interface.

The computer mode is started by selecting measurement mode 6. The computer can also start the computer mode by sending an R-command after the instrument displays READY and the instrument has set DTR to high state.

Returning to keypad use is accomplished either by pressing the STOP key or by sending a Q-command.

Computer Control Commands in Module 1:

In the computer control mode Multiskan EX responds to the following commands:

R	Starts the computer control.
F1...F8	Filter selection.
FMnn...n	Individual filter is selected for each column. n=filter number, numbers from 1 to 8 can be selected.
E0	Selection of continuous plate movement.
E1	Selection of step wise plate movement.
C	Current program module number is sent.
Cn	Selection of program module, n = 1 - 4, where 1 = primary EIA module 2 = agglutination module 3 = cut off module 4 = cubic spline module Note: After selecting a new program module autocalibration is taking place (25 s). A new R command has to be entered now to enter the computer control.
A	Air blank.
B	Reagent blank on column defined by command S.
P	Measuring the whole plate and sending the results via the interface in the microplate format.
PM	Measuring the whole plate using individual filter for each column and sending the results via the interface in the microplate format.
Pn	Measuring the whole plate n times (n = 1-99) and sending the results via the interface in the microplate format.
Mn	Measuring n columns starting from the starting column (n = 1-12)
Sj	Determining the relative starting column (j = 1-12)
I	Initializing the starting column so that the absolute starting column is 1 Example: I LF S2 LF M4 LF (columns 3, 4, 5 and 6 are measured)

O	Driving the plate out and initializing the starting column so that the absolute starting column is j. Example: O LF S2 LF M4 LF (columns 2, 3, 4 and 5 are measured)
X1	Set shaking speed to maximum. (This speed is selected as a default.)
X2	Set shaking speed to 66 % of maximum.
X3	Set shaking speed to 33 % of maximum.
Zn	Shaking of the microplate, n is shaking time in seconds (n = 00-60) Example: Shaking of 5 s is entered as Z05.
T	Date and time.
N	Serial number.
V	Version number of the software.
Q	Returning to the keypad use.

Commands T, N and V can also be used while the instrument displays READY.

Each command must be terminated by LF. Multiskan EX disregards spaces before the command. Up to 48 extra characters between the command and LF will be ignored.

Acknowledgement Messages in Module 1:

Multiskan EX acknowledges each command by sending a message. The following messages are used:

OK	The action has been successfully performed.
ER1	Error (see section 5. Trouble shooting)
ER3	An invalid command that Multiskan EX was not able to understand.

The P and PM commands are acknowledged by sending values of the measured wells. Data flow to the computer is a follows:

DATA DATA DATA DATA DATA DATA DATA DATA DATA DATA DATA DATA CRLF
DATA DATA DATA DATA DATA DATA DATA DATA DATA DATA DATA DATA CRLF
DATA DATA DATA DATA DATA DATA DATA DATA DATA DATA DATA DATA CRLF
DATA DATA DATA DATA DATA DATA DATA DATA DATA DATA DATA DATA CRLF
DATA DATA DATA DATA DATA DATA DATA DATA DATA DATA DATA DATA CRLF
DATA DATA DATA DATA DATA DATA DATA DATA DATA DATA DATA DATA CRLF
DATA DATA DATA DATA DATA DATA DATA DATA DATA DATA DATA DATA CRLF
DATA DATA DATA DATA DATA DATA DATA DATA DATA DATA DATA DATA CRLF

where

CRLF =	carriage return and line feed
DATA =	6 characters, where the first character can be a space or a minus sign and the remainder can be digits or decimal points

The V command sends the text MULTISKAN EX VERSION X.Y (where X can be 1...9 and Y can have 1 to 8 characters) as acknowledgement message.

The T command is acknowledged by sending XX. XXX 19XX XX:XX:XX
(example: 19. MAR 1991 20:42:03).

The N command is acknowledged by sending SERIALX...X, where X can be 0...9, - or space
(example: SERIAL352-00001).

Computer Control Commands in Module 2 (optional):

R	Starts the computer control
Q	Returning to keypad use
WM <points>	Agglutination measurement is performed. The parameter <points> is optional and defines which ones of the 20 measured profile points are sent in the response. The parameter is a string of ASCII "1"s and "0"s. The string length is free, the character in the middle of the string corresponds to point 10. If the string is shorter than 20 characters, the undefined points will not be sent in response. If <points> is left out, absorbances of all 20 points will be sent.
F1-F8	Filter selection (filters 1-8)
C	Current program module number is sent.
Cn	Selection of program module, n = 1 - 4, where 1 = primary EIA module 2 = agglutination module 3 = cut off module 4 = cubic spline module Note: After selecting a new program module autocalibration is taking place (25 s). A new R command has to be entered now to enter the computer control.
V	Version numbers of the software
T	Date and time
N	Serial number

Acknowledgement Message in Module 2:

For acknowledgement messages see module 1.

Measuring with Multiskan EX under Computer Control

The computer program, which controls Multiskan EX, must consist of modules for

- sending a command to Multiskan EX,
- waiting for an answer from Multiskan EX and
- working according to a message or results.

Computer Control Commands in All Modules

Modules 1 and 2 are recommended to use with an external computer, because all commands exist in these modules. However other modules contain some commands:

Com.	Meaning	MOD 1 PRIM	MOD 2 AGG	MOD 3 CUT	MOD 4 CUB
R	Start remote control	Yes	Yes	Yes	Yes.
Fn	Filter n=1..8	Yes	Yes	Yes	Yes
FMnn	Multifilter nn 12 pcs	Yes	–	–	–
En	Measurement mode n=0, 1	Yes	–	Yes	–
C/Cn	Module change n= , 1..4	Yes	Yes	Yes	Yes
A	Air blank	Yes	–	Yes	–
B	Column blank	Yes	–	Yes	–
P/Pn	Plate measure n= , 1..99	Yes	–	Yes	–
PM	Multifilter measure	Yes	–	–	–
Mn	Column measure n=1..12	Yes	–	–	–
Sj	Set column j=1..12	Yes	–	Yes	–
O	Initialize column = 0	Yes	–	Yes	–
I	Initialize column = 1	Yes	–	Yes	–
Xn	Mixing speed n=1..3	Yes	–	Yes	Yes
Zn	Mixing n=00..60	Yes	–	Yes	Yes
T	Time	Yes	Yes	Yes	Yes
N	Serial number	Yes	Yes	Yes	Yes
V	Software version	Yes	Yes	Yes	Yes
Q	Quit remote control	Yes	Yes	Yes	Yes
WMp	Agglut. measurement	–	Yes	–	–

3.5 Storing the Programs

User determined programs can be stored into the memory of the instrument for later use.

Storing is done with the SAVE key. When it is pressed the instrument asks for program number (PROGRAM NUMBER), which can be 1 to 64. Enter the program number. SAVING DATA is blinking on the display for a while.

The stored program can be taken later into use with the RECALL key and using the same program number.

3.6 General Parameters

The following general parameters can be selected with the PARAM key (and the arrow keys or ENTER key):

1	RS-FORMAT:	1. PRINTER FORMAT (header information and absorbances are sent via the interface) 2. COMPUTER FORMAT (only absorbances are sent via the interface in plate format) 3. OLD MCC FORMAT (only absorbances are sent via the interface in column format)
2	PLATE MOVEMENT:	The speed at which the plate is moved can be selected: 1. CONTINUOUS (5 s) 2. STEP MODE (25 s)
3	PROGRAM PRINTING:	Programs in the memory of the instrument are printed on the built-in printer.
4	PRINTER ON/OFF SELECTION	On/off selection of the built-in printer. When the printer is suppressed, results are automatically sent via the interface. When the instrument is switched on, the latest selection will be valid.
5	PLATE ANALYSIS:	After results have been presented in the microplate format, the instrument sends via the interface the mean value, minimum value, maximum value, delta value, standard deviation value, delta percentage and coefficient of variation percentage for every column and row and also for the whole plate. On/off selection of the analysis: 1. ANALYSIS OFF 2. ANALYSIS ON (not available on module 2 and 4)
6	FILTER WHEEL:	Number of filters and filter wavelengths can be entered. NR OF FILTERS 1 — Number of filters (1 - 8) can be entered or changed with the arrow and number keys. FILTER 1 WAVEL 340 — Filter wavelengths in nanometers can be entered or changed with the arrow and number keys. The entered values are used until changed.
7	CLOCK SET:	Date and time (year, month, day of the week, hour, minute) can be changed with the arrow and number keys.
8	PRINTOUT SPACING:	On the printout of the external printer an empty row can be left between the results of the rows (print out spacing). On/off selection of the printout spacing: 1. NO SPACING 2. PRINTOUT SPACING
9	MIXING	Mixing of the microplate before measurement is started 1. MIXING OFF 2. MIXING ON * MIXING FAST * MIXING MEDIUM * MIXING SLOW - MIXING TIME: enter the time in seconds (0-60 s). Default value is 15 s.
10	MODULE LISTING	List of modules is printed out.

4. SERVICING

4.1 Maintenance

To guarantee the continuing reliability and accuracy of Multiskan EX avoid disturbing any of the optical system components. A misalignment of the light path affects measurements.

Keep the optical system clean to ensure proper functioning and accurate results. Prevent any liquid from entering the instrument. Keep the instrument free of dust and other foreign matter. Avoid touching lens surfaces, filters or detectors with fingers.

4.2 Routine Cleaning of the Instrument

Turn the power off and unplug the instrument.

Use disposable gloves.

Clean the instrument outside, the track (Fig.11:1) and the plate carrier (Fig.11:2) with a cloth dampened with water or mild detergent.

4.3 Cleaning of the Optical System

Remove the two retaining screws (Fig.11:3, 11:4) of the measuring assembly cover and remove the cover. Clean the track (Fig. 11:5) inside the measuring assembly as above.

NOTE: **Do not touch the measuring circuit board (Fig. 11:6) by hand.**

Clean the eight focusing lenses at the end of the optical fibre bundle (Fig. 11:7) with a cloth dampened with water, mild detergent or 96 % ethanol. If 96 % ethanol is used, wipe afterwards with a napless cloth dampened with water. The upper lenses are situated under the detector frame (Fig.11:8). Remove the two detector frame from fasteners with washers (Fig. 11:9). Lift the detector frame from the handle (Fig. 12:1). Clean the upper lenses (Fig. 12:2) by the same way as focusing lenses.

NOTE: **Do not use acetone to clean the plastic lenses (focusing lenses or upper lenses). Avoid harsh treatment.**

After cleaning the upper lenses lower the detector frame back to it's position.

NOTE: **Make sure that the Hall-element sensor (Fig. 12:3) is positioned into its slot (Fig.12:4).**

Replace the detector frame fasteners with washers (Fig. 11:9). Make sure that detector frame fasteners are placed so that the edge in the fastener faces up (see Fig. 11).

NOTE: **Do not bend the measuring circuit board cable (Fig. 11:10).**

Place the ground wire (Fig. 11:11) back to its position making sure that the ground wire will stay in its place. Replace the cover retaining screws. The screw (Fig. 11:3) will connect the measuring assembly cover to the instrument ground to suppress electrical disturbances.

Clean the interference filters with napless cloth or with lense paper. It is recommended not to use liquids when cleaning the filters.

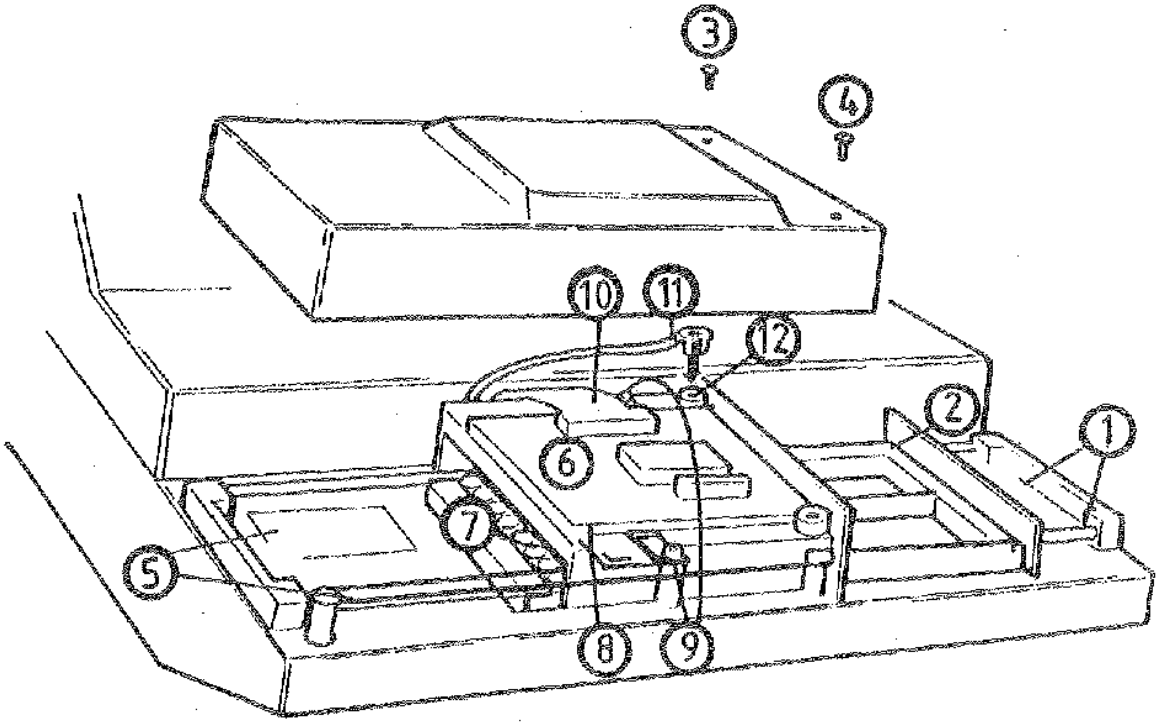

1. Track
2. Plate carrier
3. Retaining screw of the measuring assembly cover
4. Retaining screw of the measuring assembly cover
5. Track
6. Measuring circuit board
7. Focusing lenses
8. Detector frame
9. Detector frame fastener with washer
10. Measuring circuit board cable
11. Ground wire
12. Position of the ground wire

Figure 11. Opening the measuring assembly cover

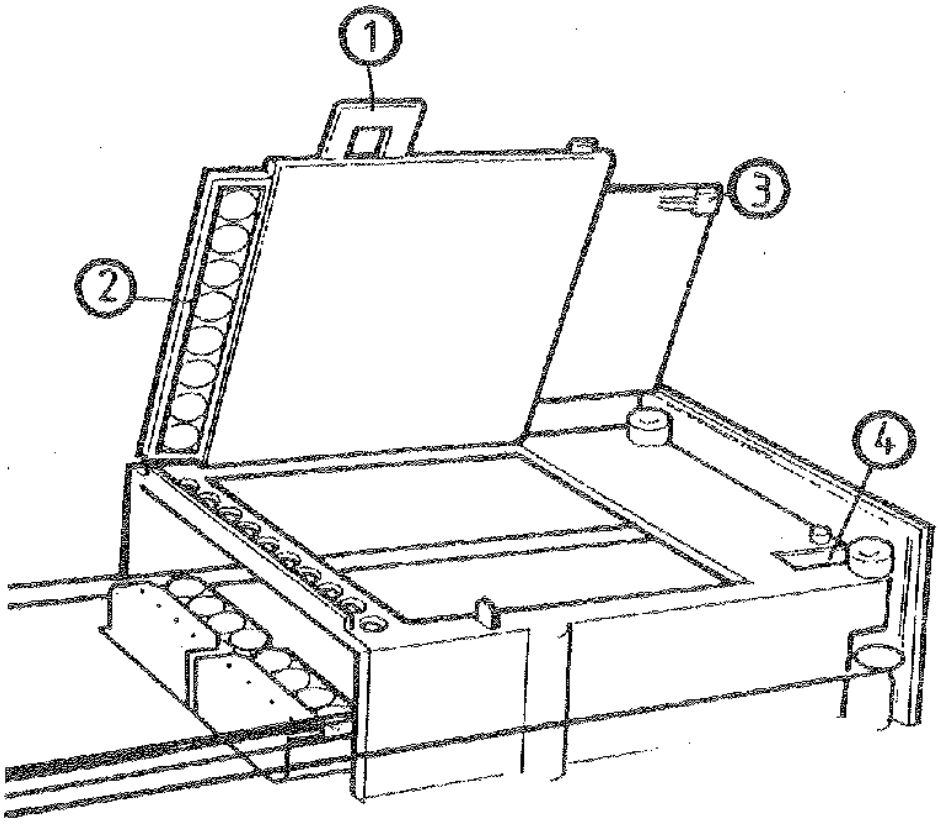

1. Handle
2. Upper lenses
3. Hall element sensor
4. Position of the Hall element sensor

Figure 12. Lifting the detector frame

4.4 Disinfection Procedure

Disinfect the instrument in case of hazard of infectious agents as follows:

Turn the power off and unplug the instrument.

Use disposable gloves.

Clean the instrument outside, the track (Fig. 11:1) and the plate carrier (Fig.11:2) with a disposable cloth dampened either with 70 % ethanol or 1 % glutaraldehyde.

Remove the two screws (Fig. 11:3, 11:4) of the measuring assembly cover and remove the cover. Clean the track (Fig. 11.5) inside the measuring assembly and the eight focusing lenses at the end of the optical fibre bundle (Fig. 11:7) as above.

NOTE: **Do not touch the measuring circuit board (Fig. 11:6) by hand.**

The upper lenses are situated under the detector frame (Fig. 11:8). Remove the two detector frame fasteners with washers (Fig. 11:9). Lift the detector frame from the handle (Fig. 12:1). Clean the upper lenses (Fig.12:2) by the same way as focusing lenses.

NOTE: **Do not use acetone to clean the plastic lenses (focusing lenses or upper lenses). Avoid harsh treatment.**

Let the surfaces of the instrument to dry.

Wipe out the thin film of the disinfection agent from the surface of eight focusing lenses and upper lenses with a napless lens tissue dampened with water. Dry the lenses with a dry lens tissue.

After drying the upper lenses lower the detector frame back to its position.

NOTE: **Make sure that the Hall-element sensor (Fig. 12:3) is positioned into its slot (Fig.11).**

Replace the detector frame fasteners with washers (Fig. 11:9). Make sure that detector frame fasteners are placed so that the edge in the fastener faces up (see Fig. 11)

NOTE: **Do not bend the measuring circuit board cable (Fig. 11:10).**

Place the ground wire (Fig.11:11) Back to its position (Fig. 11:12). Slide the measuring assembly cover to its position making sure that the ground wire will stay in its place. Replace the cover retaining screws. The screw (Fig.11:3) will connect the measuring assembly cover to the instrument ground to suppress electrical disturbances.

Please note that this procedure can not be a guarantee against contamination of personnel handling the instrument.

4.5 Changing Individual Filters in the Filterwheel

Switch the power off.
Unscrew the two cover retaining screws and lift the cover.
Lift the filter wheel from the filter wheel slot. Do not touch filter surfaces.
Remove the filter spring by unscrewing the spring position holding screw.
Insert a new filter into the wheel so that the arrow on the filter rim points downwards.
Place the filter spring into its original position and fasten the screw.
Slide the filter wheel back into the filter wheel slot with the toothed edge facing towards the rear of the instrument. The filter wheel is drawn into position by the central permanent magnet.
Close the instrument cover and replace the retaining screws.

NOTE: **When you change the amount of filters by adding a new filter you must change the parameter values (filter wheel, position and wavelength).**

4.6 Changing the Lamp

If the lamp burns out, replace it as follows.

Turn the power off and unplug the instrument. Open the instrument cover by unscrewing the two screws on each side of the instrument and lift up the cover.

NOTE: **The lamp and its surroundings may be hot.**

Lift up the lamp with the terminal socket. Pull the terminal socket from the lamp contacts (see Fig. 13).

Do not touch the reflective surface of the new lamp or the bulb itself.

Refit the terminal socket to the contacts of the new lamp approved by the manufacturer (OSRAM 64607, 8V/50 W). Place the new lamp in its place.

Close the instrument cover and replace the retaining screws. Plug in the instrument and switch the power on.

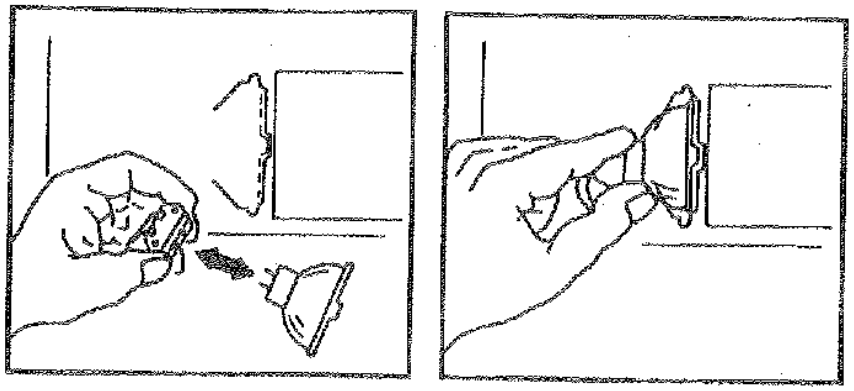

Figure 13. Changing the lamp

4.7 Changing the Fuses

The fuses are located at the rear of the instrument (Fig. 8:3).

Switch the power off.

Unplug the instrument and disconnect the power cord from the power input socket.

Unscrew the caps of the fuse holders (Fig. 14).

Replace the blown fuses with the same type.

Screw the caps back onto the fuse holders.

Reconnect the power cord and switch the power on.

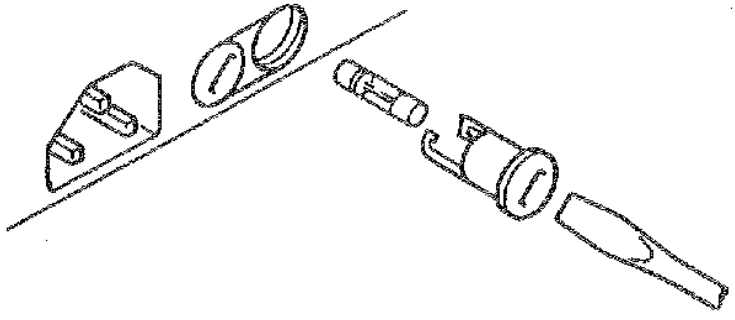

Figure 14. Changing the fuses

5. TROUBLE-SHOOTING

ERROR	REASON	RECOMMENDED ACTION
No power when switched on.		Check that the instrument is plugged in. Check that the fuses are not blown.
Unsuccessful transfer of data via the interface system.		Check that the instrument baud rate matches that of the computer. Check that the both instruments have the same character length and parity configuration. Check that the transmit/receive pin configuration is set correctly. Check that both instruments use the same kind of handshake. Check the connection cable.
PLATE ERROR		Check that the plate is properly positioned in the plate carrier. Check that no foreign matter is obstructing the carrier. Check that the rails are not dirty nor bent. Check that the toothed belt is not broken.
FILTER ERROR	Filter wheel is missing or faulty.	Place the filterwheel into the filterwheel slot. Check that the filter wheel has been properly installed or is not broken.
ADJUST OFFSET	Adjustment of light intensity faulty.	Contact service.
TOO MUCH LIGHT	Too much light enters the detectors.	Check the filter. Contact service.
NO LIGHT	Lamp has burn out.	Change the lamp.

NO CENTRONICS PRINTER	Parallel, Centronics type printer not connected.	Connect the Centronics printer.
PRINTER OFF LINE	Centronics printer in off-line position.	Switch on-line
OUT OF PAPER	Paper running out in Centronics printer.	Add paper
SAVING ERROR	Saving of the program not successful.	Contact service.
CHECKSUM ERROR	Loading of the program not successful.	Contact service.
EQUATION ERROR 1-5	Errors in cut-off equations:	
EQUATION ERROR 1	First character in equation is).	Should be (.
EQUATION ERROR 2	Number of parenthesis uneven.	Should be even.
EQUATION ERROR 3	First symbol in cut off equation not (or operand.	Should be (or operand.
EQUATION ERROR 4	Operator not followed by C or operand.	Change.
EQUATION ERROR 5	Two operands after each other in the equation.	Change.

NOTE!	Operator:	+, -, *, /
	Operand:	Well number A1 - H12 figure 1, 1.0, 0.1 etc.
	Symbol for control:	P = positive control L = low positive control N = negative control

6. GENERAL SPECIFICATIONS

Weight:	Basic unit 11 kg
Overall dimensions:	140 mm (H) x 420 mm (W) x 320 mm (D)
Mains power supply:	100 - 120 V, 50/60 Hz, nominal (operating range 90...136 V) 200 - 240 V, 50/60 Hz, nominal (operating range 180...256 V) Automatic range selection
Power consumption:	170 VA max
Fuses:	2 x 3.5 A, slow-blow type UL198G Time Delay, 5x20 mm
Operating conditions: (indoor use)	+10°C to +40°C, RH 90 % max Tested according to IEC 68-2-1, test Ab, (Cold), IEC 68-2-2, test Bb, (Dry heat) and IEC 68-2-3, test Ca, (Damp heat)
Transportation conditions:	-40°C to +70°C, packed in transportation package Tested according to IEC 68-2-1, test Ab, (Cold) and IEC 68-2-2, test Bb, (Dry heat)
Storage conditions:	-25°C to +50°C, packed in transportation package Tested according to IEC 68-2-1, test Ab, (Cold) and IEC 68-2-2, test Bb, (Dry heat)
Microplates:	The manufacturer recommends the use of flat-bottomed microplates. (Specifications are set for flat-bottomed microplates).
Spectral range:	400 - 750 nm (optional 340 - 750 nm), 8 filter slots in a filterwheel.
Read-out range:	Min 0 - 3.5 abs. units
Measurement range:	0 - 2.000 abs. units
Accuracy:	± 2.0 % or ± 0.007 abs. units whichever is greater
Precision:	CV < 0.5 % or within 0.007 abs. units at 401 - 750 nm and at 340 - 400 nm and 1 - 1.5 abs. units CV < 1.0 % at 340 - 400 nm and 1.5 - 2 abs. units
Linearity:	± 2.0 % or ± 0.007 abs. units whichever is greater
Long term stability:	Because of the autoblanking procedure the instrument is stable
Speed of operation	
warm up time:	1 minute (time taken to perform autocalibration)
reading speed:	less than 5 s/plate (continuous mode)
Display:	2x20 character alphanumeric LC display
Keypad:	30 keys with click action switches
Interface:	RS-232C serial interface, baud rate: 150, 300, 600, 1200, 2400, 4800, 9600, 19200, (9600 set by the manufacturer) character format: 1 start bit, 8 data bits, 1 stop bit, no parity Centronics-type parallel printer interface optional RS-232C interface optional IEEE-488 interface
Optical system:	Quartz tungsten halogen lamp (Osram 64607, 8V/50W), chopper wheel, aperture and condenser lens, semitransparent mirror, interference filter (in filterwheel), fibre bundle, focusing lenses, upper lenses and detectors
Interference filters:	Max. 8 selectable filters in a filterwheel in range 400 - 750 nm (optional range 340 - 750 nm). Half band width 6 - 9 nm, center wavelength accuracy ±2.0 nm (filters 340 - 413 nm). Half band width 3 - 6 nm, center wavelength accuracy ±2.0 nm (filters 414 - 750 nm).

7. SAFETY SPECIFICATIONS

Multiskan EX fulfils the following requirements:	IEC 1010-1 including Amendments 1 and 2
CSA C22.2 No 1010.1 (file LR 62464-C)	

The safety specifications are met also under the following enviromental conditions in addition or in excess to those stated in the operating conditions:

Altitude:	up to 2000 m
Temperature:	+5°C - +40°C
Mains supply fluctuations:	±10 %
Installation category (overvoltage category):	II according to IEC 664-1 (Note 1)
Pollution degree:	2 according to IEC 664-1 (Note 2)

NOTE 1 Installation category (overvoltage category) defines the level of transient overvoltage which the instrument is designed to withstand safely. It depends on the nature of the electricity supply and its overvoltage protection means. For example in CAT II which is the category used for instruments in installations supplied from supply comparable to public mains such as hospital and research laboratories and most industrial laboratories the expected transient overvoltage is 2500 V for a 230 V supply and 1500 V for a 120 V supply.

NOTE 2 Pollution degree describes the amount of conductive pollution present in the operating environment. Pollution degree 2 assumes that normally only non-conductive pollution such as dust occurs with the exception of occasional conductivity caused by condensation.

Both of these affect the dimensioning of the electrical insulation within the instrument.

CONFORMANCE TO THE EU DIRECTIVES

Multiskan EX bearing the CE mark conforms to the following EU directives	89/336/EEC (as amended by 92/31/EEC) relating to Electromagnetic Compability 73/23/EEC (Low Voltage Directive)	
Performance specifications used to verify conformance to the Directives above	EN 55022	class B
	IEC 1000-4-3/EN 61000-4-3	3 V/m
	IEC 1000-4-2/EN 61000-4-2	4 kV CD, 8 kV AD
	IEC 1000-4-4/EN 61000-4-4	1 kV
	IEC 1010-1/EN 61010-1 Including Amendments 1 and 2	

Brief Operating Instructions

Unpack the instrument.

Install the filter wheel.

Install the lamp.

Plug into mains.

Switch the instrument on.

Insert the paper roll. (Printer option)

Select the RS-format for printer or computer.

Select the plate movement to be continuous or step wise.

Select print out on the built-in printer if required.

If built-in printer, then select printing width.

If external printer, then select print out spacing.

Select shaking if required.

Select the program module.

Select the measurement mode.

Select the measurement parameters.

Select the calculation mode.

Select the calculation parameters.

Save the program.

Connect printer or computer.

Check the baud rate, transmit / receive pin configuration and handshake with DIL-switches.

Press the START key.

Results are recorded on built-in printer, external printer or computer.

Interface System

Data transfer to a computer occur via a built-in serial RS-232C interface.
Data transfer to a printer may occur via a built-in RS-232C interface or via a parallel centronics interface.

Interface hardware specification for RS-232C interface

The hardware specifications of the interface are as follows:

1. The configuration is specified as for data terminal equipment (DTE).

2. The baud rate (speed at which data is changed between an external computer and the instrument) is selected by the DIL switches at the rear of the instrument. The following baud rates are available: 150, 300, 600, 1200, 2400, 4800, 9600 and 19200. The baud rate 9600 is set by the manufacturer.

3. Character format is 10 bits with 1 start bit, 8 data bits, 1 stop bit and no parity. The format cannot be changed.

4. DTR/DSR handshake is recommended to use. Handshake type used is set by the manufacturer. The desired alternative is selected by a DIL switch at the rear of the instrument.

5. Transmit/receive pin configuration: pin 2 transmits and pin 3 receives or vice versa. The desired configuration is selected by the DIL switches at the rear of the instrument. The following configuration is set by the manufacturer: pin 2 transmits and pin 3 receives.

Signals Connected to the DB-25 Connector

The following signals are connected to the DB-25 connector at the rear of the instrument:

RS-232C PORT DB-25 CONNECTOR	
PIN NO	SIGNAL NAME
2	TxD or RxD
3	RxD or TxD
6	DSR
7	GND
20	DTR

Signal description:

2. TxD, Transmit Data output (or RxD, Receive Data input)
3. RxD, Receive Data input (or TxD, Transmit Data output)
6. DSR, Data Set Ready. The input tells Multiskan EX that the printer or computer is ready
7. GND, signal ground
20. DTR, Data Terminal Ready. DTR is in the high state when Multiskan EX is ready to receive a command.

Baud Rate Selection

The baud rate (speed at which data is changed between Multiskan EX and the computer) is selected by the DIL switches 1, 2 and 3 (Fig. 8:6).

Switch position 1	2	3	Baud rate	
down	down	down	150	
down	down	up	300	
down	up	down	600	
down	up	up	1200	
up	down	down	2400	
up	down	up	4800	
up	up	down	9600	set by the manufacturer
up	up	up	19200	

To determine which baud rate is necessary for any given computer/printer:
1. Consult the operating manual supplied with the computer (or printer)
2. Contact the dealer from which the computer (or printer) was purchased
3. Contact the computer (or printer) manufacturer.

Transmit/Receive Pin Configuration

In order to make connection between Multiskan EX and the computer easier, pin 2 can be selected to transmit or receive and pin 3 vice versa.
The configuration is selected by the DIL switches 5, 6, 7 and 8 (Fig.8:6).

Switch position 5	6	7	8	transmit/receive pin
down	down	up	up	pin 2 transmits and 3 receives (set by the manufacturer)
up	up	down	down	pin 2 receives and 3 transmits

Handshake Selection

DTR/DSR handshake:
The DTR/DSR hardware handshake makes it possible for two devises connected via the RS-232C line to check readiness before exchanging data or commands.

DSR, Data Set Ready (pin 6):
When DSR handshake is used, high (positive) state indicates that the printer or computer is ready to accept a data character. Low (negative) state indicates that the printer or computer is busy and not ready to accept a data character. Thus, before sending each character Multiskan EX waits until the other device sets the DSR line to the high state.

DSR handshake is switched on or off by DIL switch 4 (Fig. 8:6).

Switch 4 position	Handshake
up	enabled (set by the manufacturer)
down	disabled

When DSR handshake is switched off, Multiskan EX does not test DSR before sending each character.

The state of DTR (pin20) can always be checked by a computer regardless of the fourth DIL switch.

Parallel Centronics Type Printer Interface

Data transfer via a parallel Centronics type printer interface is performed through the Centronics interface (Fig. 8:7).

When using the Centronics interface, the secondary interface DIL switches 1, 2 and 3 (Fig. 8:8) should be positioned as follows:

Switch position 3	2	1	
down	up	down	Centronics type printer interface in use

Note: When the secondary switches are in the position

3	2	1
down	up	up

the results are sent via Centronics and RS-232C interface simultaneously.

Ordering Information and Address

Accessories	Labsystems code
RS-232C interface cable for printer	2304040
RS-232C PC - serial cable F-M	2305300
RS-232C interface cable for MAC	2303850
Filterwheel without filters	24071230
Other filters in the 340-750 nm range can be ordered (XXX corresponds to the wavelength)	142xxx0
Filter box	1041980
Instruction manual	1507300
Dust cover	1610002
Shaft for paper roll	1042220

Spares for maintenance	
Lamp	2400620
Fuse 3.5 A (10 pcs/box)	1210950
Paper roll	1600510

LABSYSTEMS OY
(head office)
Sorvaajankatu 15
P.O. Box 8
FIN-00881 Helsinki
FINLAND
Tel: +358-9-329 100
Telefax: +358-9-3291 0415

Examples How to Use Multiskan EX

Example 1.

Module 1, absorbance measurement with point to point calculation with 3 standards and 2 replicates on every plate. Blank samples are situated before standards. Results are printed on the built-in printer.

Key to be pressed	Display/Procedure performed
	READY ! XX:YY
SHIFT + ENTER	PROGRAM MODULE one of the program modules
1	1 PRIMARY EIA
ENTER	AUTOCALIBRATING READY! XX:YY
MEAS MODE	one of the measurement modes
1	1 ABSORBANCE MODE
MEAS PARAM or ENTER	FILTER 340 (default value)
MEAS PARAM or ENTER	one of the blanking possibilities
2	2 SINGLE WELL BLANK
MEAS PARAM or ENTER	BLANK WELL A1 (default value)
MEAS PARAM or ENTER	1 BL ON EVERY PLATE or
	2 RETAINED BLANK
1	1 BL ON EVERY PLATE
MEAS PARAM or ENTER	READY! XX:YY
CALC MODE	one of the calculation methods
9	9 POINT TO POINT
CALC PARAM or ENTER	NR OF STDS 2 (default value)
3	NR OF STDS 3
CALC PARAM or ENTER	NR OF REPL 1 (default value)
2	NR OF REPL 2
CALC PARAM or ENTER	STANDARD 1 0.000 (default value)
CALC PARAM or ENTER	STANDARD 2 0.000 (default value)
15	STANDARD 2 15

CALC PARAM or ENTER	STANDARD 3 0.000 (default value)
100	STANDARD 3 100
CALC PARAM or ENTER	1 STD ON EVERY PLATE or
	2 RETAINED STANDARD
1	1 STD ON EVERY PLATE
CALC PARAM or ENTER	READY! XX:YY
SAVE	PROGRAM NUMBER X
1	PROGRAM NUMBER 1
ENTER	SAVING DATA (blinking)
	READY! XX:YY
PARAM	one of the general parameters
5	5 PRINTER OFF/ON
PARAM or ENTER	1 PRINTER OFF / 2 PRINTER ON
2	2 PRINTER ON
PARAM or ENTER	READY! XX:YY
START	MEASURING
	PRINTING (results are printed on the built-in printer)
	READY! XX:YY

Example 2.

Module 3, absorbance measurement at 450 nm. Blank on well A1. Floating cut off calculation with cut off equation (P+N)x0.5. Grey area 0.02. Interpretation + > -. Check out the printing: results sent to external printer.

Key to be pressed	Display/Procedure performed
	READY ! XX:YY
SHIFT + ENTER	PROGRAM MODULE one of the program modules
3	3 cut off
ENTER	AUTOCALIBRATING READY! XX:YY
MEAS MODE	one of the measurement modes
1	1 ABSORBANCE MODE
MEAS PARAM or ENTER	FILTER 340 (default)
450	FILTER 450
MEAS PARAM or ENTER	one of the blanking procedures
2	2 SINGLE WELL BLANK
MEAS PARAM or ENTER	BLANK WELL A1
MEAS PARAM or ENTER	1 BLANK ON EVERY PLATE or 2 RETAINED BLANK
1	1 BLANK ON EVERY PLATE
MEAS PARAM or ENTER	READY! XX:YY
CALC MODE	one of the calculation modes
4	4 CUT OFF
CALC PARAM or ENTER	CUT OFF EQUATION PRESS ENTER
ENTER	
(, SHIFT, P, +, SHIFT, N,) x 0.5	(P+N)x0.5
ENTER	NO OF POS CTRL 1
2	NO OF POS CTRL 2
ENTER	POS CTRL 1 WELL A1
2, 1	WELL B1

ENTER	POS CTRL 2 WELL A1
3, 1	WELL C1
ENTER	NO OF NEG CTRL 1
2	NO OF NEG CTRL 2
ENTER	NEG CTRL 1 WELL A1
4, 1	WELL D1
ENTER	NEG CTRL 2 WELL A1
5, 1	WELL E1
ENTER	GREY AREA 0.000
0.02	GREY AREA 0.02
ENTER	INTERPRETATION 1 + > - or 2 - > +
1	1 + > -
ENTER	READY! XX:YY
PARAM	one of the general parameters
1	1 RS FORMAT
PARAM or ENTER	1 PRINTER FORMAT or 2 COMPUTER FORMAT or 3 OLD MCC FORMAT
1	1 PRINTER FORMAT
PARAM or ENTER	READY! XX:YY
PARAM	one of the general parameters
5	5 PRINTER OFF/ON
PARAM or ENTER 1	1 PRINTER OFF / 2 PRINTER ON 1 PRINTER OFF
PARAM or ENTER	READY! XX:YY
START	MEASURING SENDING DATA READY! XX:YY

Example 3.

Absorbance measurement at 405 nm. Blanking on well A1 (blank well only on the first plate). Cubic spline curve fit with 2 standards and 2 replicates (positions: B1, C1, D1, E1). Same standard curve used for other plates. Unit for standard concentrations mg/l. 2 plates are measured. Scale used is log/lin. External printer for recording of the results.

Key to be pressed	Display/Procedure performed
	READY ! XX:YY
SHIFT + ENTER	PROGRAM MODULE one of the program modules
4	4 Cubic spline
ENTER	AUTOCALIBRATING READY! XX:YY
MEAS MODE	one of the measurement modes
1	1 ABSORBANCE MODE
ENTER	FILTER 340 (default)
405	FILTER 405
ENTER	one of the blanking procedures
2	2 SINGLE WELL BLANK
ENTER	BLANK WELL A1
ENTER	1 BLANK ON EVERY PLATE or 2 RETAINED BLANK
2	2 RETAINED BLANK
ENTER	READY! XX:YY
CALC MODE	one of the calculation modes
2	2 CUBIC SPLINE
ENTER	NO OF STDS 2 (default)
ENTER	NO OF STDS 1 (default)
2	NO OF REPL 2
ENTER	STANDARD 1 0.000
0.001	STANDARD 1 0.001
ENTER	STD 1 REPL 1 A1
B1	STD 1 REPL 1 B1
ENTER	STD 1 REPL 2 A1
C1	STD 1 REPL 2 C1
ENTER	STANDARD 2 0.000
1	STANDARD 2 1.000
ENTER	STD 2 REPL 1 A1

D1	STD 2 REPL 1 D1
ENTER	STD 2 REPL 2 A1
E1	STD 2 REPL 2 E1
ENTER	1 STD ON EVERY PLATE or 2 RETAINED STANDARD
2	2 RETAINED STANDARD
ENTER	one of the units
6	6 UNIT mg/l
ENTER	one of the scaling possibilities
3	3 SCALE LOG/LIN
ENTER	READY! XX:YY
Measurement of the first plate	
START	** MEASURING ** CALCULATING parameters, standard curve, concentrations are printed out
	1 ACCEPT RESULTS or 2 NEW FIT
2	2 NEW FIT
ENTER	one of the scaling possibilities
4	4 SCALE LOG/LOG
ENTER	PRESS PRINT
PRINT	SENDING CALCULATING
	1 ACCEPT RESULTS or 2 NEW FIT
1	1 ACCEPT RESULTS
ENTER	READY! XX:YY
Measurement of the second plate	
START	1 USE OLD BLANK or 2 NEW BLANK NOW
1	1 USE OLD BLANK
ENTER	1 USE OLD CURVE or 2 NEW CURVE NOW
1	1 USE OLD CURVE
ENTER	** MEASURING ** SENDING DATA CALCULATING
	1 ACCEPT RESULTS or 2 NEW FIT
1	1 ACCEPT RESULTS
ENTER	READY! XX:YY

Recalling a Program from the Memory of the Instrument

Program in example 1 was stored into the memory of the instrument with program number 1 and is now recalled from the memory of the instrument to be executed.

Key to be pressed	Display/Procedure performed
	READY ! XX:YY
RECALL	PROGRAM NUMBER X
1	PROGRAM NUMBER 1
ENTER	READY ! XX:YY
START	MEASURING (according to example 1)
	PRINTING
	READY ! XX:YY

Printer Suppression

The results are sent automatically via the RS-232C interface or via the parallel centronics interface when the built-in printer is suppressed. Secondary interface DIL switches 1, 2 and 3 determine which of the two interfaces is in use (For instructions about the interface system, see Appendix 2).

Key to be pressed	Display/Procedure performed
	READY ! XX:YY
PARAM	one of the general parameters
5	5 PRINTER ON / OFF
ENTER	1 PRINTER OFF or 2 PRINTER ON
1	1 PRINTER OFF
ENTER	READY ! XX:YY
	Now all results will be sent automatically via the interface.

Interface Connections

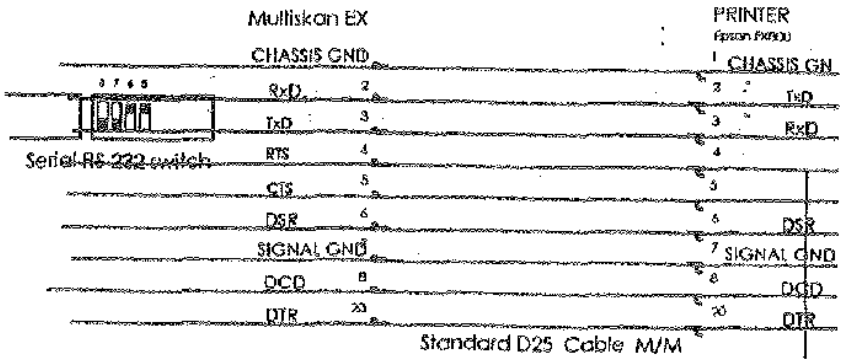

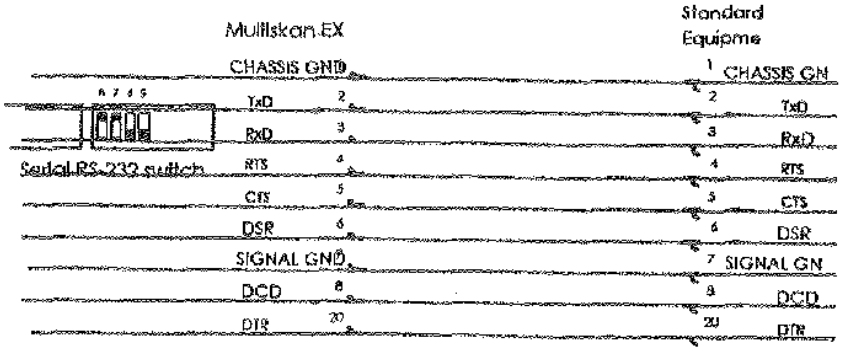

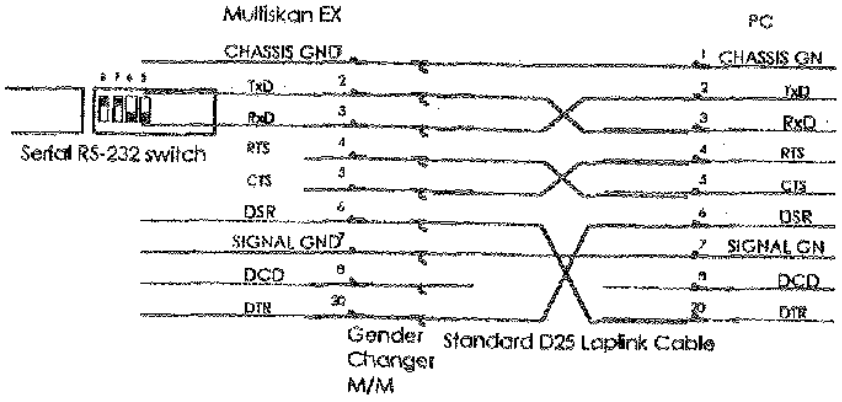

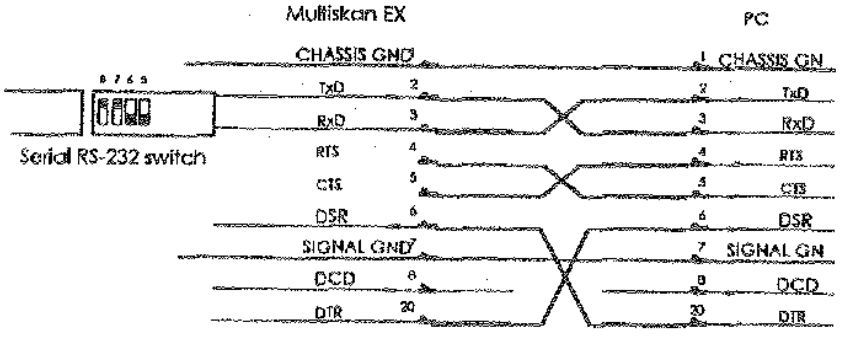

Labsystems

Manufactured for:
Labsystems Oy
Research Systems Division
Sorvaajankatu 15, P.O.Box 8
FIN-00881 Helsinki,
FINLAND.
Tel. +358-9-329100
Telefax +358-9-32910415

Distributed by:

A
LIFE SCIENCES
INTERNATIONAL
COMPANY

Functional description

Section 3

Functional description

Contents

SUBJECT *PAGE*

Functional description

SKANPRI2

GENERAL
Pcb SKANPRI2 is the printer board containing a central processing unit.

RELATED DOCUMENTS
311-03-S Schematic diagram
311-03-P Component layout

TESTING AND ADJUSTING
Instructions are given in chapter "TESTING AND ADJUSTING".

JUMPER SETTINGS
None

BASIC COMPONENTS
1. CENTRAL PROCESSING UNIT (D1)
2. TRANSISTOR ARRAY (D2)
3. TG SIGNAL WAVEFORM SHAPING CIRCUIT (V6)

OPERATION
1. CENTRAL PROCESSING UNIT
The operation of the printer is controlled by a mask programmed processor 80C49 (D1). Parallel data is input to the CPU's port P1 through the handshake of a simplified centronic system containing STROBE and READY signals.

Data is set in the bus, STROBE is set low, the CPU sets the READY signal high during read operations and new data cannot be transferred until READY goes low.

The length of the data buffer is set by CPU pins 21, 22 and 23. When pins 21 and 23 are connected to ground and pin 22 is not, the length of the data buffer is set to twentyfive characters on paper, therefore the last character (25th) must be [CR]. When the data for a line is input, or [CR] code is entered, the printer starts printing. Before the operation begins the program checks the position of the head-carrier, if it is not at the HOME position then only one feed is performed.

2. TRANSISTOR ARRAY (D2)
Data from port DB controls, via transistor array ULN2803A or LB1256, the printer motor as well as the seven thermal printing heads.

3. TG SIGNAL WAVEFORM SHAPING CIRCUIT (V6)
The tachogenerator (TG) signal is output from a signal generator directly connected to the motor. The TG generates an artificial sine wave of 2 cycles per one turn. The signals are converted into rectangular printing timing signals by the TG signal waveform shaping circuit (V6).

The Home Switch Signal (HOME SW) detects the home position of the printer. When the signal is in the high state, the printer is in the home position.

The hardware reset to pin 4 resets the CPU. This occurs when the supply voltage momentarily goes low.

The density of the characters on thermal paper is adjusted with the frequency coming to CPU's pin 39.

Functional description

CHOPT-01

GENERAL
Pcb CHOPT-01 controls the chopper wheel and fan motors.

RELATED DOCUMENTS
347-09-P Component layout
347-09-S Schematic diagram

TESTING AND ADJUSTING
Instructions are given in chapter "TESTING AND ADJUSTING"

JUMPER SETTINGS
None

OPERATION
Connector X1 is connected to the power supply and connector X2 to pcb MUSCU2A. Circuit N3 (Timer TLC 555) is controlled by a pulse from the IR-reader (on its falling edge). From circuit N3 pulses are lead to the back coupling of the chopper wheel rotative velocity. The chopper wheel rotative velocity is regulated by circuit N1 (Regulator LM723). Rating voltage of rotative velocity is ca. 3V, which is determined by resistors R1 and R2. Output of circuit N1 is lead, via PTC-resistor R14 which prevents motor overload, to connector X3. Motor rotative velocity is adjusted by trimmer R3.
Regulating circuit N2 (Regulator LM723) holds the fan rotative velocity steady, although the power supply voltage +24V would vary.

Functional description

MUCEN2

GENERAL

Pcb MUCEN2 contains a parallel Centronics type printer interface. Lines are buffed via circuit 74LS241 (Octal Bus Driver). Some lines have protection diodes (D4 and D5) to protect TTL-circuits D2 and D3 (74LS241), if somebody connects the parallel and serial interface across.

RELATED DOCUMENTS

347-10-P Component layout
347-10-S Schematic diagram

OPERATION

Circuit D1 (8255, programmable peripheral interface) is an input/output controller.

Connector X2 is 25-poles D-connector from pcb MUSCU2A.

See Figure 3-1 and Table 3-1 for signal description.

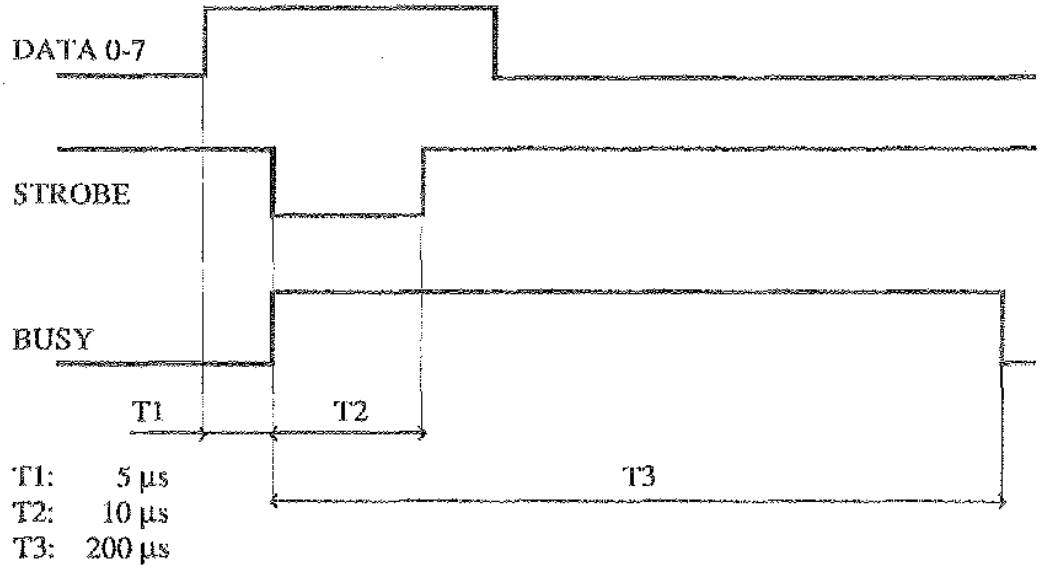

Figure 3-1

PIN	SIGNAL	DESCRIPTION
1	STROBE	Data bus is trigged to the printer by the synchronizing signal STROBE.
2-9	DATA 0-7	Data buses. Upper bit D7 is connected to ground, so it is not possible to send special characters to the printer.
11	BUSY	BUSY-signal is indicated the status of the printer. When the printer can not receive data, signal is in HIGH state. Possible reasons for BUSY-signal: – receiving buffer is full – printer is handling data – printer is in OFF LINE-status – printer is ERROR-status
12	PE	Signal HIGH, paper is run out
13	SLCT	Signal LOW, the printer is in OFF LINE-status. Signal HIGH, the printer is in ON LINE-status.
14	AUTOFDX	Signal HIGH, line feed (LF) is printed automatically after carriage return (CR). Signal LOW, line feed is printed automatically.
15	ERROR	Printer can not receive data.
16	RES	Reset signal to reset the printer.
18-25	GND	Ground

Table 3-1

Functional description

MACU2A

GENERAL

Pcb MACU2A receives 8-channels (A-H) measurement and converts it into a digital 12-bits word which is lead to pcb MUSCU2A. Pcb MACU2A includes a Hall-sensor, which indicates the "home position" of the carriage.

RELATED DOCUMENTS

349-08-S Schematic diagram
349-08-P Component layout

TESTING AND ADJUSTING

Instructions are given in chapter "TESTING AND ADJUSTING".

JUMPER SETTINGS

None

BASIC COMPONENTS

1. DETU
2. ANALOGICAL MULTIPLEXER (D3)
3. INVERTING AMPLIFIER (D4), D/A CONVERTER (D5)
4. A/D CONVERTER (D7)
5. HALL-SENSORS (V9 and V11)

OPERATION

1. DETU

Light detectors V1-V8 (Hamamatsu S1227-66BQ) are connected to component assembly DETU. Current from the detectors are converted into voltage by amplifiers D1 and D2 (LF444).

Each detector have an inverting amplifier, which upper frequency limit 4,8 kHz is determined by capacitors C1-C8 (33 pF) and resistors R1-R8 (1M).

2. ANALOGICAL MULTIPLEXER (D3)

Signals from circuits D1 and D2 are lead to circuit D3 (analogical multiplexer LF13508), where the detector is chosen (1 of 8). Choice is determined by bits A0-A2, which are lead from pcb MUSCU2A via connector X1.

3. CIRCUITS D4 AND D5

Signal from the multiplexer is lead to a digital adjustable amplifier formed by D/A converter D5 (AD7533), inverting amplifier D4 (LF441), transistor V10 (BC337) and resistor R17 (10K).

Three upper bits G0-G3 from the D/A converter are used to adjustment. Bits are lead from pcb MUSCU2A via connector X1 to the D/A converter. Max/Min gain is 8.

Upper frequency limit of circuit D4 is 40kHz (R10 = 182K, C31 = 22pF). Trimmer R12 (100K) is used for offset adjustment.

4. A/D CONVERTER D7 (AD574)

A/D converter D7 (AD574) effects the 12-bits modification. Modification is lead to pcb MUSCU2A, via connector X1, 8-bits wide so that upper bits (DB8-DB11) and lower bits (DB0-DB3) are written by rotation into data channels D7-D4, and centre bits (DB4-DB7) into data channels D3-D0.

Signal R/E is HIGH when the A/D converter is effecting modification and LOW when the result is read.

Signal A0 is LOW during the modification (12-bits modification).

When reading 8 upper bits signal A0 is LOW, and 4 lower bits signal A0 is HIGH.

When CS-signal is LOW, modification is started.

When STS-signal is HIGH, converter is converting.

5. HALL-SENSORS (V9 and V11)

Hall-sensors V9 and V11 (UGN3013U) indicate the "home position" of the carriage. When the carriage is in the "home position", output of the Hall-sensor is LOW.

Functional description

MUSCU2A

GENERAL
Pcb MUSCU2A is the main electronics board of the Multiskan MS containing microprocessor and input/output circuits.

RELATED DOCUMENTS
349-03-S Schematic diagram
349-03-P Component layout

TESTING AND ADJUSTING
Instructions are given in chapter "TESTING AND ADJUSTING".

JUMPER SETTINGS
None

BASIC COMPONENTS
1. **MICROPROCESSOR (D1)**
2. **CONTROL CIRCUITS D8, D9, D10, D11, D12**
3. **CIRCUIT D14**
4. **INPUT/OUTPUT CONTROL CIRCUITS (D17, D18, D19, D20, D21, D23, D24)**
5. **INPUT/OUTPUT CIRCUITS**

OPERATION
1. MICROPROCESSOR (D1)
Central processing unit is Intel's 8085AH-2. It controls memory and I/O circuits via four groups of signals:

1.1 Lower address/data bus: AD0-AD7
Signals AD0-AD7 are multiplexed address (lower 0-7 bits) and data lines. Address signals to memory and I/O circuits and data signals to both directions are synchronized with ALE.

1.2 Higher address bus: A8-A15
Signals A8-A15 are higher (8-15) bits of the address lines to memory and I/O circuits.

1.3 Control bus: RD, WR, ALE, CLK, IO/M, RES (S0 and S1 not used)
See Table 3-4 for signal descriptions.

WR (Write)	Write pulse for SRAM, EEPROM and I/O circuits.
RD (Read)	Read pulse for EPROM, EEPROM, SRAM and I/O circuits.
ALE (Address Latch Enable)	ALE is used to set the lower bits (0-7) of address for circuit D11 (Octal transparent latch). ALE is also, together with CPU READY signal, used to create a clock signal of 3.072 MHz which is lead to the CLK input of the CPU.
CLK (Clock)	Clock signal for I/O circuits.
IO/M	Select read/write operation to be either input/output or memory oriented, input/output HIGH active
RES	Reset output for peripheral circuits, HIGH active
S0, S1	Not used

Table 3-2
Control bus signal description

1.4 External control lines: RST5.5, RST6.5, RST7.5, SID, SOD, RES IN, X1, X2 HOLD, INTR, TRAP are forced to LOW state and READY is forced to HIGH state.

See Table 3-5 for signal descriptions.

RST5.5	Indicates that a key has been pressed, HIGH activate
RST6.5	Plate carrier home position indication, LOW active
RST7.5	Timing interrupt for the CPU
SID	Delay counter input
SOD	Buzzer, output HIGH active
RES IN	Reset input
X1, X2	6.144 MHz crystal input
HOLD	Forced to LOW state
INTR	Forced to LOW state
TRAP	Forced to LOW state
READY	Forced to HIGH state

Table 3-3
CPU external control lines

Fig. 3-1 illustrates control signal waveforms after RESET switch has been applied.

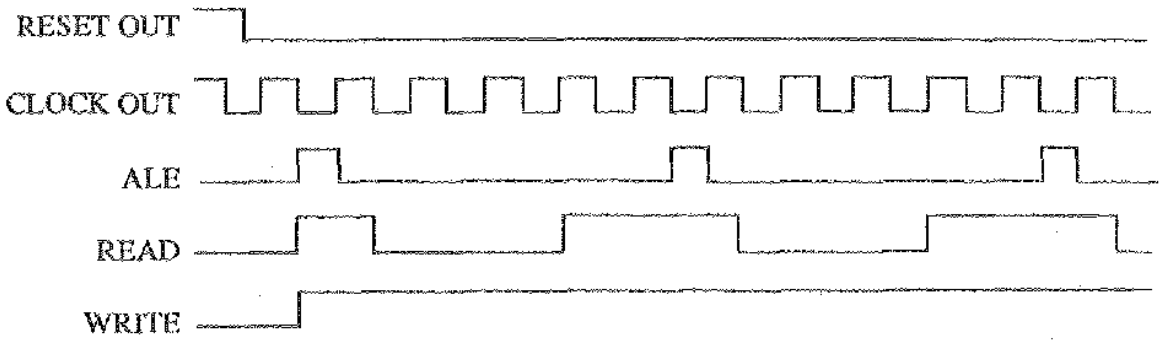

Figure 3-3
External control signals after RESET

2. CONTROL CIRCUITS D8, D9, D10, D11, D12

D8 and **D9** (74LS241, Octal Bus Driver) are buffers for CPU's control lines (RD, WR, ALE, CLK, IO/M) and higher memory lines (A8-A15).

D10 (74LS138, 3-line to 8-line Decoder OR PAL 16L8) is used to encode CS-signals for memory circuits D13-D16.

D11 (74LS373, Transparent Latch) is used to latch lower address lines (A0-A7) to memory circuits. D11 is synchronized by ALE signal.

D12 (74LS245, Octal Bus Transceiver) buffers data between CPU and memory circuits. LOW state of the CPU's IO/M-line enables circuit and RD-line controls operation mode; line is in LOW state when data is transferred from memory to the CPU and in HIGH state when data is transferred from CPU to memory.

3. CIRCUITS D14

D14 (27128, EPROM) contains logarithmic table used during AD-conversion. D14's address space is 8000H-BFFFH (16kBYTE).

4. INPUT/OUTPUT CONTROL CIRCUITS (D17, D18, D19, D20, D21, D23, D24)

D17 (74LS241) buffer control lines (RD, WR, CLK, RES) and higher address lines (A8-A15) between CPU and I/O circuits.

D19 (74LS245) buffers data (D0-D7) between CPU and I/O circuits. HIGH state of the CPU's IO/M-line enables circuit and RD-line controls operation mode; line is in LOW state when data is transferred from I/O circuit (selected by CS-line) to the CPU and in HIGH state when data is transferred from CPU to the I/O circuit (selected by CS-line).

D20 (74LS90, Counter) and **D21** (4040, Counter) are used to divide CLK-signal.

D23 and **D24** (74LS138) are used to encode CS-lines for I/O circuits.

5. INPUT/OUTPUT CIRCUITS

- Real time clock MM58274 (D24) and control circuits (D5, D27)
- Input/Output controller 8255 (D30)
- Timer/counter 8253 (D25)
- USART 8251 (D31) and control circuits (D22, D32, D56)
- Input/Output controller 8255 (D33)
- Keyboard controller 8279 (D35)
- LCD control
- IEEE-488/ RS-232C/CENTRONIX (AS AN OPTION) X6

D28 (MM58274, Real Time Clock) and circuits **D5** (ICL7665, Voltage Detector) and **D27** (4066, Analog Switch) compose a calendar and a timing clock. Address space (CS1) is 00H-0FH (16BYTE).

Circuit D5 detects the supply voltage. When instrument is switched off, D5 and D27 force CS1- and WR-lines of the D28 to 3-state. Battery G1 is capable to supply the real time clock circuitry for ca. five years.

D30 (8255 Input/Output controller). Address space of CS2 is 10H-1FH (16BYTE). Tables 3-6 to 3-8 illustrates descriptions of input and output signals.

INPUT PORT A	DESCRIPTION
A0	Synchronizing pulse "SYNC A" from chopper wheel
A1	Stepping motor clock frequency
A2	Real time clock interrupt
A3	Plate carrier home position detection (hall-element), LOW active
A4	Plate carrier column information, HIGH when positioned to a column
A5	Filter wheel position
A6	Filter wheel 0-state
A7	Synchronizing pulse "SYNC B" from chopper wheel

Table 3-4
D30 Input signals, port A

OUTPUT PORT B	DESCRIPTION
B0	Enables plate carrier position reading, HIGH active
B1	Enables filter position reading
B2	Pinhole plate solenoid
B3	Enables plate carrier stepping motor operation, LOW active
B4	Sets filter motor rotation directions
B5	Sets plate carrier motor driving direction, LOW inwards, HIGH outwards
B6	Enables filter motor driving
B7	Sets half/full step driving method for plate carrier motor, LOW full step, HIGH half step

Table 3-5
D30 Output signals, port B

OUTPUT PORT C	DESCRIPTION
C0	A/D converter gain bit G1
C1	A/D converter gain bit G2
C2	A/D converter gain bit G0
C3-C5	EXTRA output lines
C6-C7	Lamp voltage control lines to power supply

Table 3-6
D30 Output signals, port C

D25 (8253, Timer). Address space of CS3 is 20H-2FH. Circuit contains 3 separate 16-bit counters:

Counter 0 = Delay counter, lead to CPU's SID-input
Counter 1 = Generates clock frequency for stepping motors
Counter 2 = Generates timing interrupt signal, lead to CPU's RST7.5 input

D31 (8251, USART). Address space of CS7 is 60H-6FH. Circuit controls serial interface RS-232C using the following signals:

RxD = Receive Data
TxD = Transmit Data
DSR = Data Set Ready (Peripheral ready to receive)
DTR = Data Terminal Ready (8251 ready to receive)

D32 (LT1081, Voltage Converter) is a buffer between transmit and receive signals. It contains a voltage converter (5V - 9V) which adapts the logical levels of the transmit and receive signals.

D22 (74LS151, Multiplexer) is controlled by DIP-switch S6 switches 1, 2 and 3 to set appropriate Baud rate. Table 3-9 illustrates description of the DIP-switch S6 switches.

SWITCH POSITION 1	2	3	BAUD	
■	■	■	150	
■	■	■	300	
■	■	■	600	
■	■	■	1200	
■	■	■	2400	**
■	■	■	4800	
■	■	■	9600	
■	■	■	19200	

** Default setting by manufacturer

SWITCH POSITION 1	2	3	4	TRANSMIT/ RECEIVE PINS	
■	■	■	■	Pin 2 transmits, Pin 3 receives	
■	■	■	■	Pin 3 transmits, Pin 2 receives	**

Other combinations illegal

** Default setting by manufacturer

Table 3-7
DIP switch S6 settings

OUTPUT PORT A	DESCRIPTION
A0-A7	Data- and strobe-signals for optional printer assembly SKANPRI2

OUTPUT PORT B	DESCRIPTION
B0-B7	IEEE-488 address selection, set with DIP-switch S5

OUTPUT PORT C	DESCRIPTION
C0	Reset line for SKANPRI assembly, LOW active
C1-C3	A/D converter channel selection
C4	READY-signal from SKANPRI assembly, LOW active
C5	EXTRA I/O
C6	EXTRA I/O
C7	STS-line from pcb MACU

Table 3-8
D33 Input and Output signals

D33 (8255, Input/Output controller). Address space of CS8 is 70H-7FH. Table 3-10 illustrates a description of input and output signals.

D35 (8279, Keyboard/Display controller). Address space (CS9) is 80H-8FH. Circuit is used in encoded mode using four Scan-lines and eight Return-lines which enables reading of keyboard's 27 keys.

D6 (74HC00, NAND Gate) is used to encode Enable-signal for the display using RD-, WR- and CS10-signals. Address space for the display is 90H-9FH. Data for display is read from data-bus.

CS6 is a chip select signal for A/D converter on pcb MACU2. Address space for CS6 is 50H-5FH. Table 3-11 illustrates A/D conversion control signals.

X6 (Connector for IEEE-488/ RS-232/ CENTRONIX interface, as an option)

Pcb MUGIB (IEEE-488 interface) contains circuit D1 (8291, GPIB Talker/Listener). Address space for CS4 is 30H-3FH. See functional description of circuit D33.

Pcb RS-IFO (RS-232 interface) has the same operation as item 5. D36 (74LS151, multiplexer) placed on pcb MUSCU2 is controlled by DIP-switch S1 to set appropriate Baud rate.

Address space for CS5 is 40H-4FH.

CENTRONIX option is connected to the printer connector (on pcb MUSCU2).

SIGNAL	DESCRIPTION
HD	Plate carrier home position detection (hall element), LOW when home
WR	Start-signal for conversion, LOW active
A8	Address-line
CS6	A/D converter enable, LOW active
STS	From A/D converter on pcb MACU, HIGH when conversion in progress
D0-D7	Data lines
G0-G2	A/D converter gain set signals
CH0-CH2	Channel selection lines for channels A-H

Table 3-9

A/D conversion control signals

Functional description

MUSME

GENERAL

Pcb MUSME have all memory circuits and memory control circuits of the Multiskan MS.

RELATED DOCUMENTS

349-02-S Schematic diagram
349-02-P Component layout

OPERATION

1. MEMORY OPERATIONS

Bits for memory and I/O-operations and 16-bits address line are always lead to the pcb MUSME through buffers circuits D1, D3 and D4.

The data line for memory circuits is lead to the pcb MUSME through the two way buffer circuit D2 (74LS245).

2. INPUT/OUTPUT OPERATIONS

The data in I/O-operations will pass the channel buffer of the external memory card, because the buffer is active only in the memory operations. Data bits are taken from outputs of the pcb MUSCUs buffer circuit D19. D19 has been driven with cards IOCE*- and RD*-signals to function only during I/O-operations.

The three I/O data bits which tells the operation mode are written direct to the latch circuit D5. See Table 3-10.

To the circuit D5 is written also D3 from which condition depends the address configuration of the memory.

CASS which tells if the memory cassette is missing is read through the circuit D4.

3. LOGIC TO CHOOSE THE OPERATION MODE

The decoding of the pcb MUSME will be done with the PAL circuit (GAL16V8-25) and demultiplexer D7 (74HC138).

The processor writes three operation modes choose bits (AM0 - AM2) and the drive bit of the memory configuration (MCON) to the latch circuit D5.

To the PAL circuit is lead control bits IO/M*, RD* and WR*, five most significant address bits, the memory configurations drive MCON and as a return coupling bits CSE4* and CSE5*.

BIT	DESCRIPTION
CSRAM*	Shows RAM circuit
CSEE*	Shows EEPROM circuit
CSE*	Shows EEPROM, where put to the D7
CSMEG*	Shows 128 kB EEPROM circuit
IORD*	I/O read operation to the pcb MUSME
IOWR*	I/O write operation to the pcb MUSME

Table 3-10
Output signals from PAL circuit

CSE* output is lead to the multiplexer D5 driven by choose bits AM0 - AM2 which are written in the latch circuit D7. AM0 - AM2 are guiding the CSE* signal to the EEPROM according to the Table 3-11.

AM2	AM1	AM0	CSE...*
1	1	1	CSE0*
1	1	0	CSE1*
1	0	1	CSE2*
1	0	0	CSE3*
0	1	1	CSE4*
0	1	0	CSE5*
0	0	1	CSE6*
0	0	0	CSE7*

Table 3-11
CSE multiplexers function*

Bits CSE4* and CSE5* are used to show 128 kB EEPROM circuit which have enough space for two program codes of the operation mode. CSE4* and CSE5* are lead back to the PAL circuit which gives the choose signal CSMEG* to the EEPROM. Whichone from EEPROMs operation modes are used depends from the condition of AM0 because it is lead to the EEPROMs most significant address output A16.

Functional description

MOTCU3

GENERAL

Pcb MOTCU3 contains control and positioning electronics for the plate carrier, the filter stepping motor and the pinhole plate.

RELATED DOCUMENTS

349-04-S Schematic diagram
349-04-P Component layout

TESTING AND ADJUSTING

Instructions are given in chapter "TESTING AND ADJUSTING".

OPERATION

1. PLATE CARRIER MOVEMENT

Motor controller N1 (L297) generates phase drive signals for stepper motor. Dual fullbridge driver N2 converts the logic level phase signals to high voltage and high current for stepper motor windings. Dual matrix diode circuit V4 (UC 3610) protects outputs of N2.

Motor driver N1 drives the motors in unipolar mode. Table 3-12 illustrates control signals from a processor board through connector X1.

L277 Stepper Motor Controller IC generates phase drive signals for 4 phase stepper motor. Pulse width modulating chopper circuits permit switching mode control of the current in the windings. The resistors R11, R12, R20-23 provide current feedback signals to the controller. RC circuit R10, C7 determines the chopper rate.

PIN	SIGNAL	DESCRIPTION
1	PLATE MOTOR H/F	Half/full step driving method, HIGH = half step, LOW = full step
3	PLATE MOTOR CW/$\overline{\text{CCW}}$	Plate carrier driving direction, HIGH = carrier out, LOW = carrier in
4	PLATE ENABLE	Enables plate carrier stepping motor operation.
5	PLATE CURRENT	Controls motor current, HIGH = high current, LOW = low current
9	$\overline{\text{CLK/M}}$	Clock frequency for motor driver.

Table 3-12
Control signals to pcb MOTCU3

2. FILTER MOTOR DRIVING

Motor driver N4 (Sprague's UCN 5804B) drives the filter motor in half-step mode only in one direction. Table 3-13 illustrates control signals from a processor board through connector X1.

Diodes V7 - V10, zener diode V6 (8.2 V) and capacitor C14 protect driving circuit against inductive transients.

R19 (PTC) protects the motor and driver from overheating during a malfunction. If the supply current exceeds 470 mA, PTC's resistance increases and the supply current is reduced.

3. PINHOLE PLATE DRIVING

Stepper motor driver N3 (PBL 3717) drives the solenoid of the pinhole plate through connector X6. The circuit consists of an LSTTL compatible logic input, current sensor, switch mode current regulator and an output stage with built-in protection diodes.

R8 is the current feedback resistor, and the current sense signal is connected through resistor R7 to comparator input. RC-circuit R5 and C4 determines the switching frequency.

Input 0 (Pin 9) is kept steady high and input 1 (Pin 7) is controlled by the processor through latch circuit D1 and connector X1 pin 6 (Signal name $\overline{\text{SOLENOID}}$).

4. PLATE CARRIER POSITIONING

Positioning of the plate carrier is carried out with a positioning strip attached to the carrier. Positioning strip has 12 passages, one for each column of the Microplate. IR-reader V5 (GE H21) detects the passages while carrier is moved. PLATE POS-signal is in LOW state when carrier is out or a column is positioned for measurement.

PLATE DET-signals high state opens the transistor V3 and IR-reader's LED is illuminated. If the light path is free, IR-reader's transistor opens and PLATE POS-signal goes low, which is the active state.

5. FILTER MOTOR POSITIONING

Filter motor positioning operates same way as plate carrier positioning. Two IR-readers are connected to connector X4. High state of the signal FILTER DET activates the LEDs of the IR-readers through transistor V2. The transistors of the IR-readers are connected through latch circuit D1 to connector X1. Low state of signal FILTER POS (pin 11) indicates that one of the filters is selected. Low state of signal FILTER HOME POS (pin 10) indicates the home position of the filterwheel, which also means filter no 1 is selected.

6. PINHOLE PLATE POSITIONING

Pinhole plate positioning operates as other positionings. IR-reader is connected to connector X5.

FILTER DET-signal activates the LED of the IR-reader, and the output is connected to PLATE POS-signal.

PIN	SIGNAL	DESCRIPTION
2	$\overline{\text{FILTER ENABLE}}$	LOW = active, enables filter motor operation.
9	$\overline{\text{CLK/M}}$	Clock frequency for motor driver.

Table 3-13
Control signals to pcb MOTCU3

Functional description

MUSCU-RC-01

GENERAL
Pcb MUSCU-RC-01 is the main electronics board of the Multiskan RC containing microprocessor.

RELATED DOCUMENTS
351-01-S Schematic diagram
351-01-P Component layout

TESTING AND ADJUSTING
Instructions are given in chapter "TESTING AND ADJUSTING".

JUMPER SETTINGS
None

BASIC COMPONENTS
1. **MICROPROCESSOR (D1)**
2. **MEMORY CIRCUITS (D3, D4)**
3. **INPUT/OUTPUT CONTROL CIRCUITS (D2, D6, D7)**

OPERATION

1. MICROPROCESSOR (D1)

Central processing unit is Siemens' 80C535. It controls memory and I/O lines via 7 ports:

Input/Output port 2

Higher address bus: A8-A15

Input/Output port 0

Lower address/data bus: AD0-AD7

Input/Output port 3

RD (Read)	Read pulse for EPROM, SRAM and I/O circuits.
WR (Write)	Write pulse for SRAM and I/O circuits.
R/C	Read/convert signal from the MACU board.
STS	From A/D converter on the pcb MACU HIGH when conversion in progress.
SYNCA	Synchronizing pulse from the chopper wheel.
PLATE POS	Plate carrier column information HIGH when positioned a column.
TXD	Transmit data of RS-232.
RXD	Receive data of RS-232.

Input/Output port 1

PLATE ENA	Enables plate carrier motor driving.
PLATE CW/CCW	Sets plate carrier motor driving direction.
HD	Plate carrier home position detection, LOW active.
CLK M	Stepping motor clock frequency.
FILTER POS	Filter wheel position.
CTS	Clear to send of RS-232.
FILTER HOME	Filter wheel home position, filter no 1 selected.

Input/Output port 4

PLATE DET	Enables plate carrier position reading, HIGH active.
FILTER DET	Enables filter position reading.
LED RED	Controls red colour of LED.
LED GREEN	Controls green colour of LED.
RTS	Request to send of RS-232.
G0-G2	A/D converter, gain bits G0-G2.

Input/Output port 5

X15 TP	Test pin to synchronize an oscilloscope, high when measuring.
ADA0	Address selection of A/D converter.
SOLENOID	Pinhole plate solenoid.
CH0-CH2	Channel selection lines for channels A-H.

Input/Output port 6

RTS/CTS	RTS/CTS handshaking of RS-232 high is off.
XON/XOFF	XON/XOFF handshaking of RS-232 high is off.
9600/2400	Baud selection of RS-232 high is 9600.

2. MEMORY CIRCUITS (D3, D4)

Program memory **D3** (27512) and RAM **D4** (32kx8) chips are directly controlled by the processor.

3. INPUT/OUTPUT CONTROL CIRCUITS (D2, D6, D7)

D2 (74LS373, Transparent Latch) is used to latch lower address lines (A0-A7) to memory circuits. D2 is synchronized by ALE signal.

D6 (74LS245) buffers data (D0-D7) between CPU and A/D converter.

D7 (LT1081, Voltage converter) is a buffer between CPU and Serial connector. It contains a voltage converter (5V - 9V) which adapts the logical levels of the serial connector signals.

Section 4

Block diagrams

Block diagrams

Contents

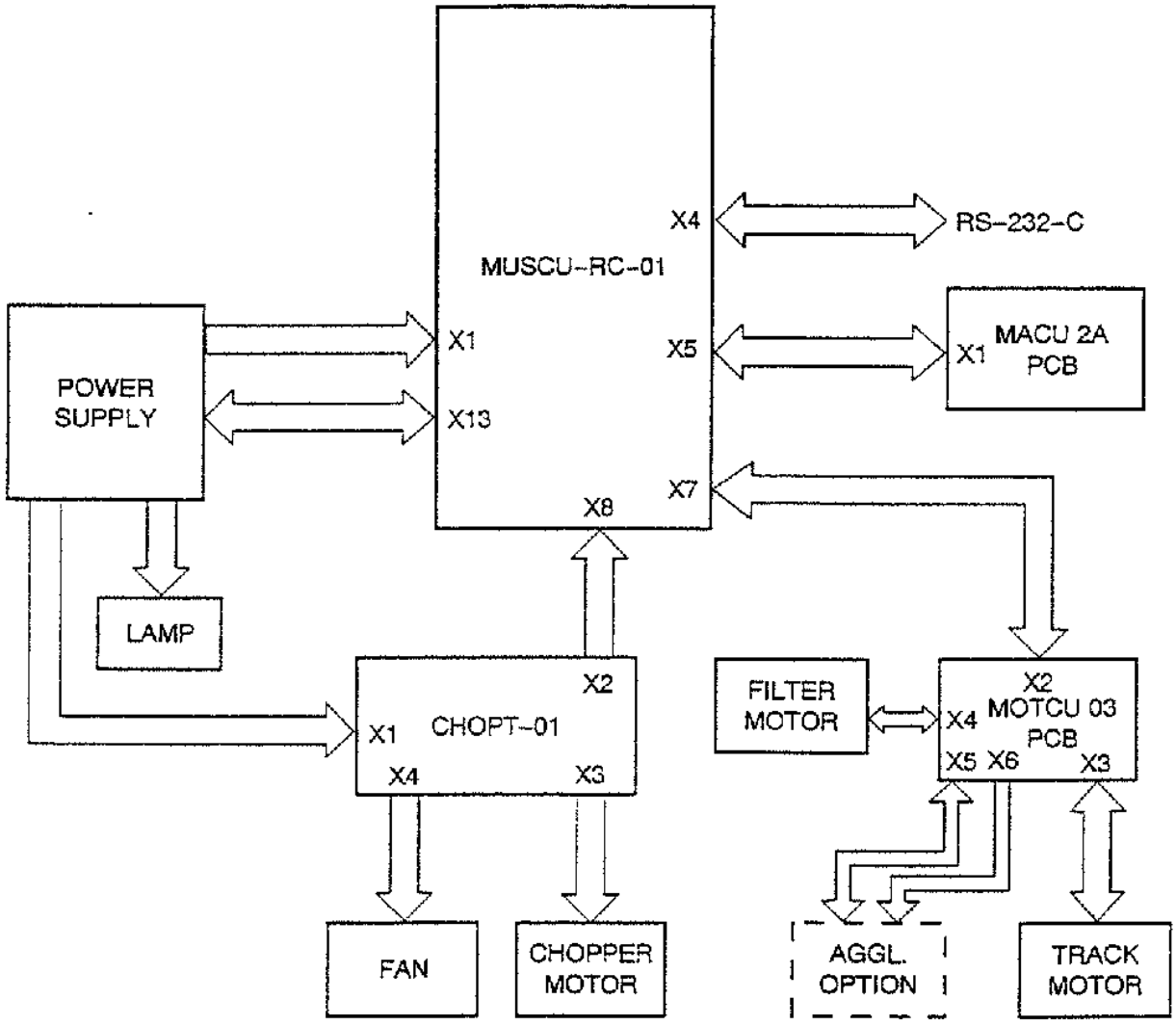

Drawer PM	Version	01					
	Draw up	12.11.93 PM					
	Inspection	17.11.93					
	Approve	17.11.93					

Multiskan RC
Block Diagram

Document Size	Scale	Page
A4	2	1/1

Code

Labsystems

Document number
351-01X-01

PC / Designer v. 3.1 /C:\KJ\VAT\35101X.DRW

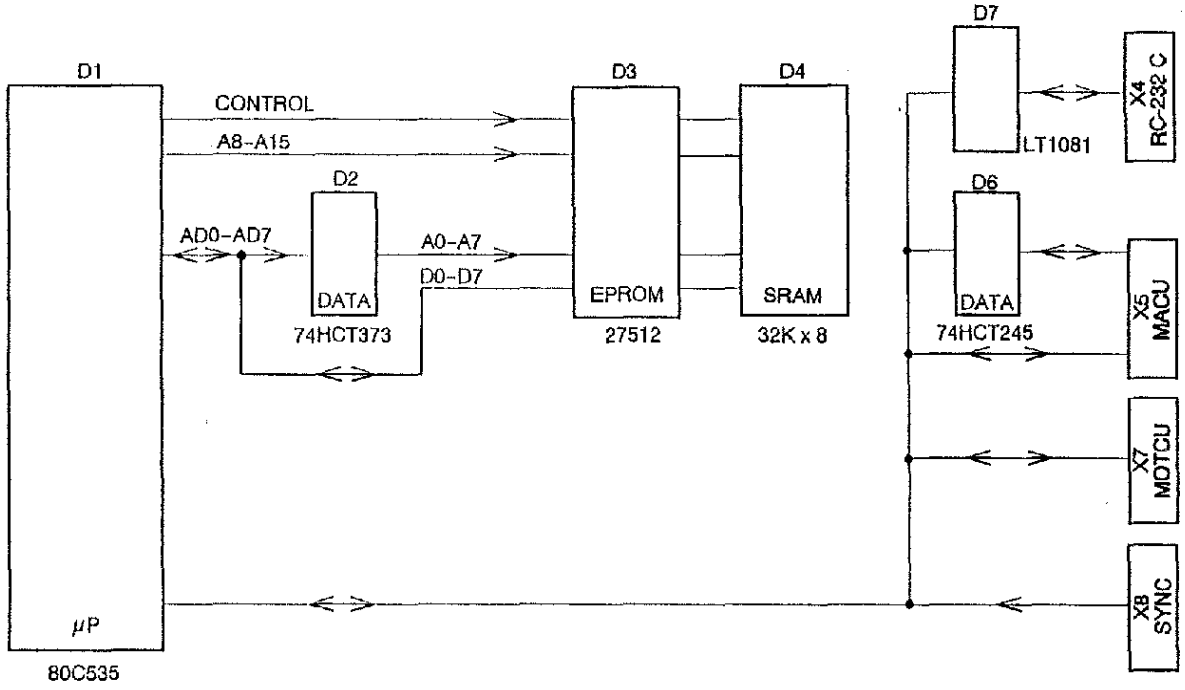

Drawer							
P.M.	Version	01					
	Draw up	15.11.93 PM					
	Inspection	17.11.93					
	Approve	17.11.93					

Multiskan RC Block Diagram	Document Size A4	Scale 2	Page 1/1
	Code		Document number 351-02X-01

Labsystems

PC / Designer v.3.1 /C:\KJ\AT\351\02X.DRW

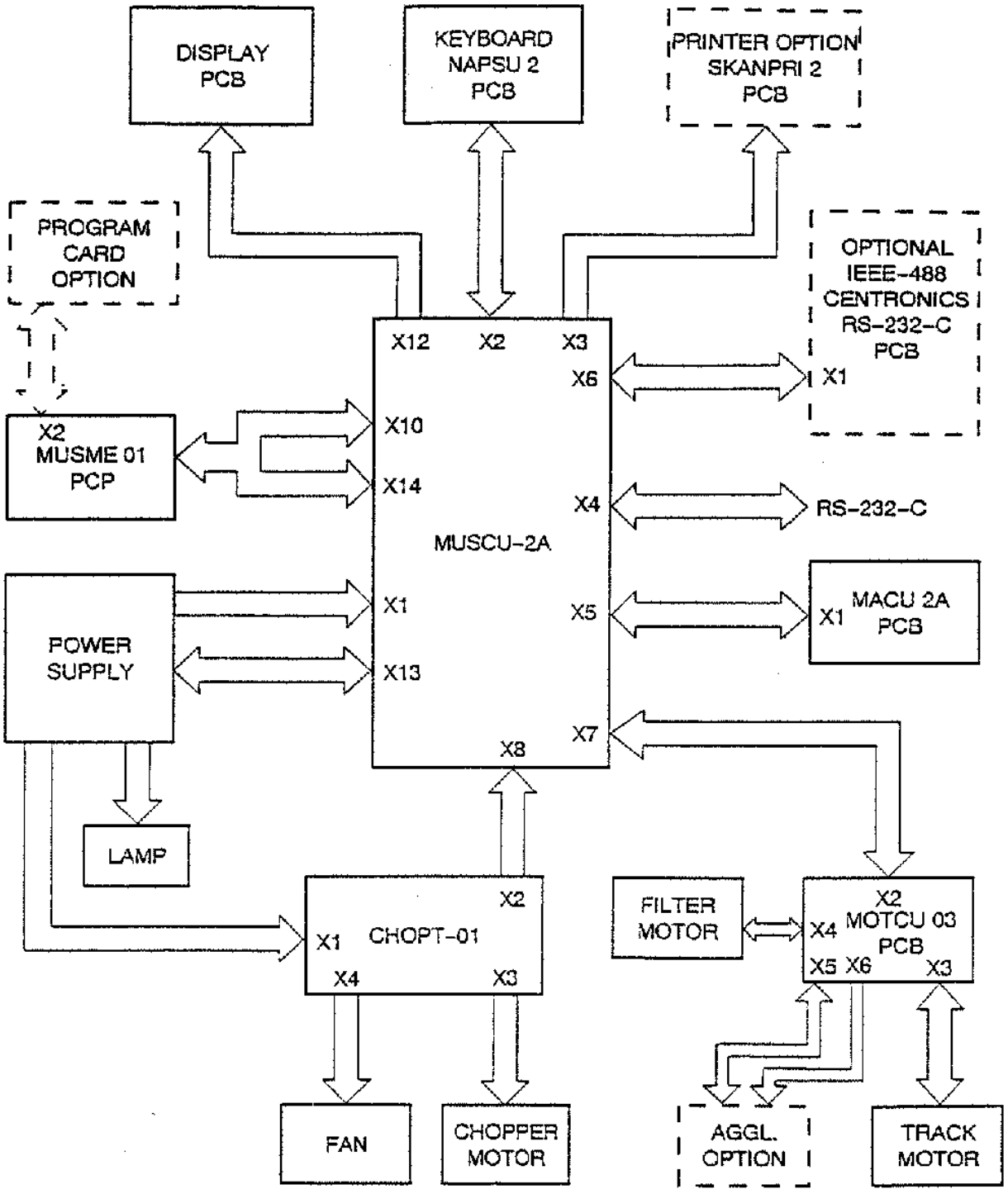

Drawer							
PM	Version	01					
	Draw up	12.11.93 PM					
	Inspection	4.3.94					
	Approve	4.3.94					

Multiskan MS
Block Diagram

Document Size	Scale	Page
A4	Z	1/1

Labsystems

Code

Document number 352-01X-01

PC / Designer v. 3.1 /C:\KUVAT\35201X.DRW

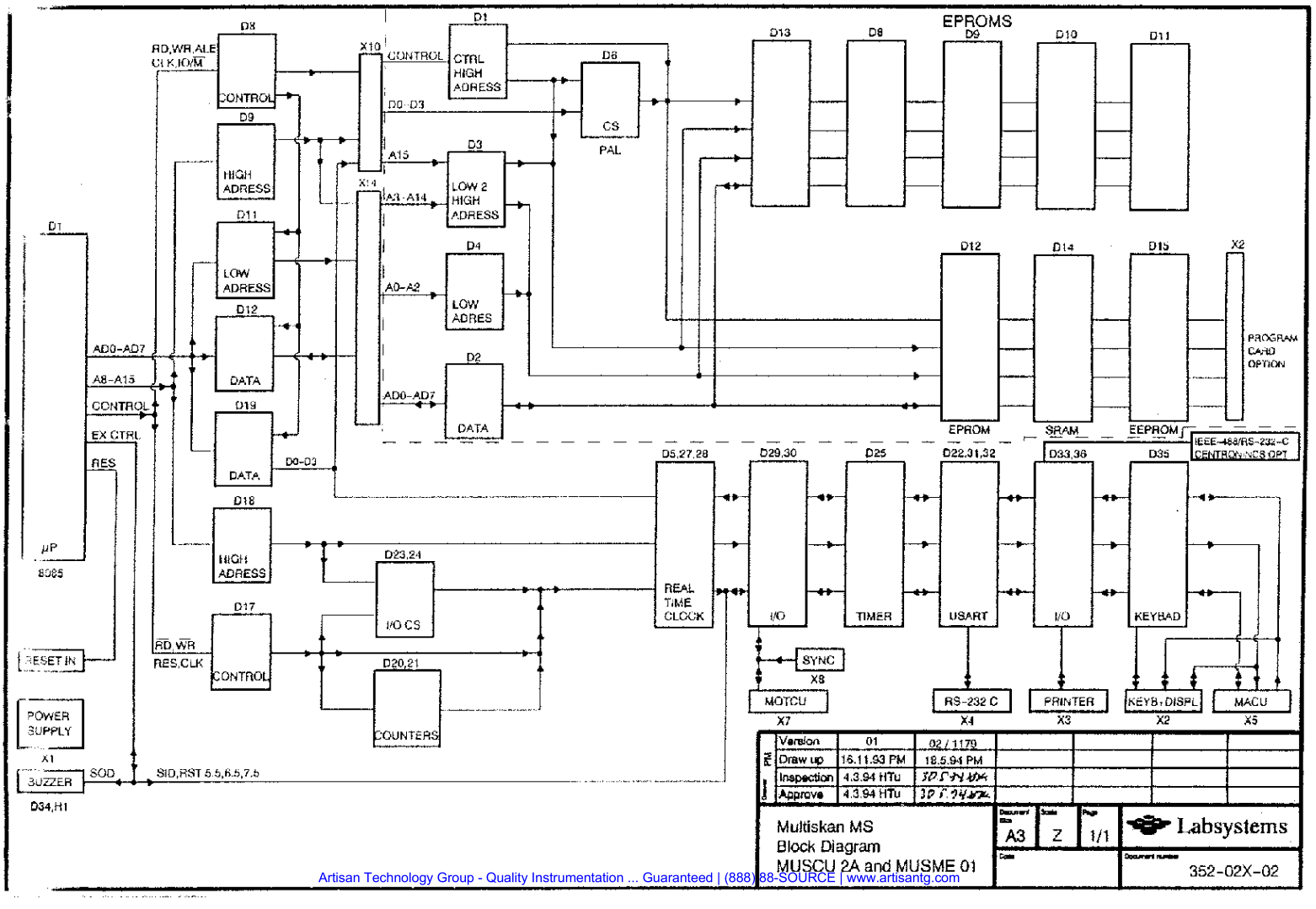

Section 5

Component layouts

Component layouts

Contents

1) Only in Printer option
2) Only in Multiskan MS
3) Only in Multiskan RC

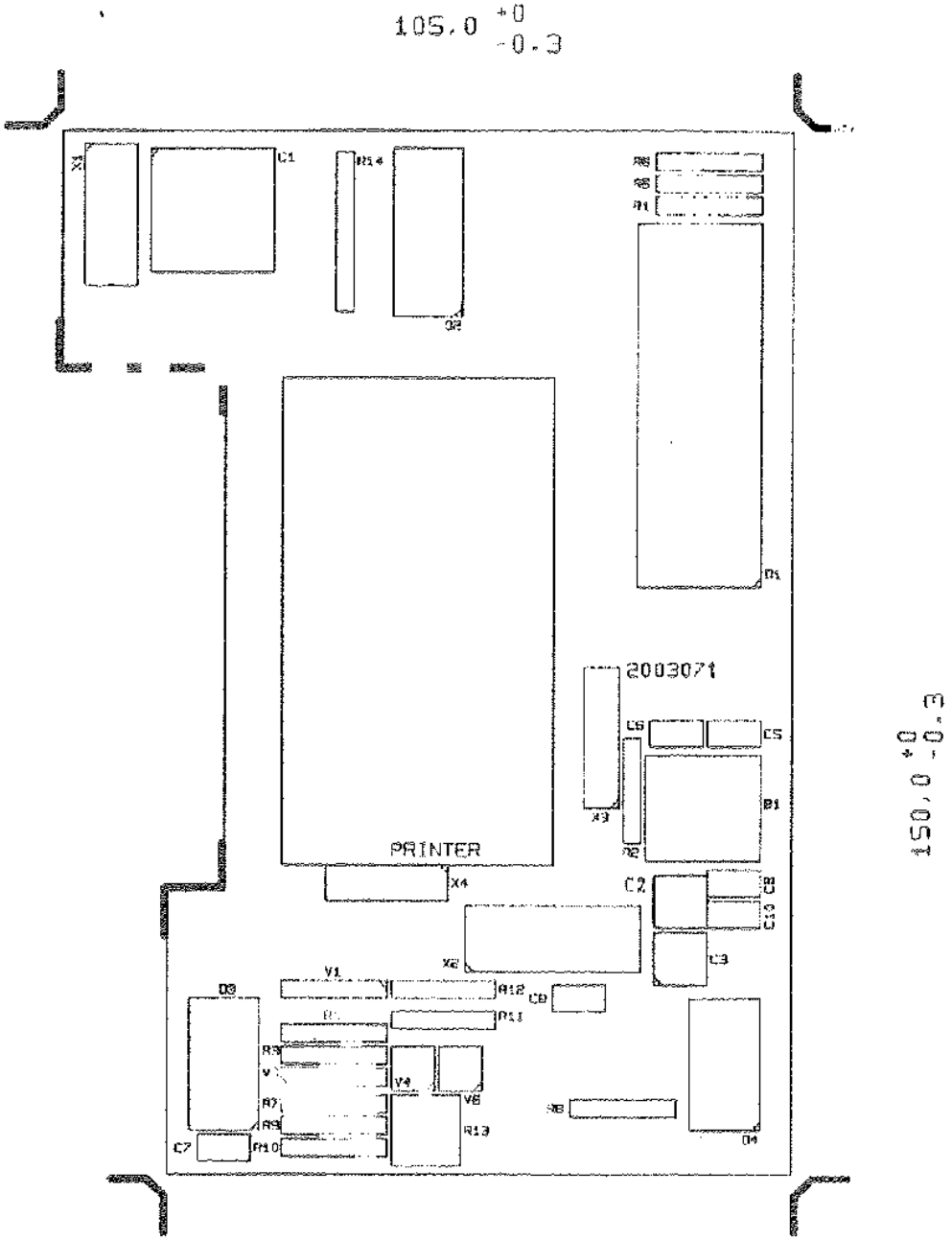

436	01.07.86 PM	1.7.86 JCV	1.7.86 JCV		02	Poistettu C4,V2 ja V5
238	9.9.85 LB	9.9.85 JH			01	C2 lisätty
Muutoe n:o	Pvm/muutt.	Pvm/tark.	Pvm/hyv.	Viite	Versio	Muutoe

TULOST. ITUNTO OY 31-12-84 DF25		PROTO ☒	O-SARJA ☐		TUOTANTO ☒	PINTAKASITTELY		
SUUNN.	21.11.84/LJ	CU 70 UM	LEV. PAKSUUS 1.6 MM	MATERIAALI FR4	PINTA-ALA 165 CM²	PUOLI 2/2	REIAT METAL.	205 KPL
TARK.	19.8.85 JH						ILMAN	6 KPL
HYV.	19.8.85 JCV	TUOTE MULTISKAN				SUHDE 1:1	YHT.	211 KPL
EFLAB OY		SKANPRI 2					KOODI	200 3071
		NIMI COMPONENT ASSEMBLY					PIIRUSNUM.	311-03-P-02

Muutos n:o	Pvm/muutt.	Pvm/tark.	Pvm/hyv.	Viite	Versio	Muutos
744	13.02.89 PHM	13.02.89	13.02.89		1A	Lis. painokytkimien "asennustiukkuus"

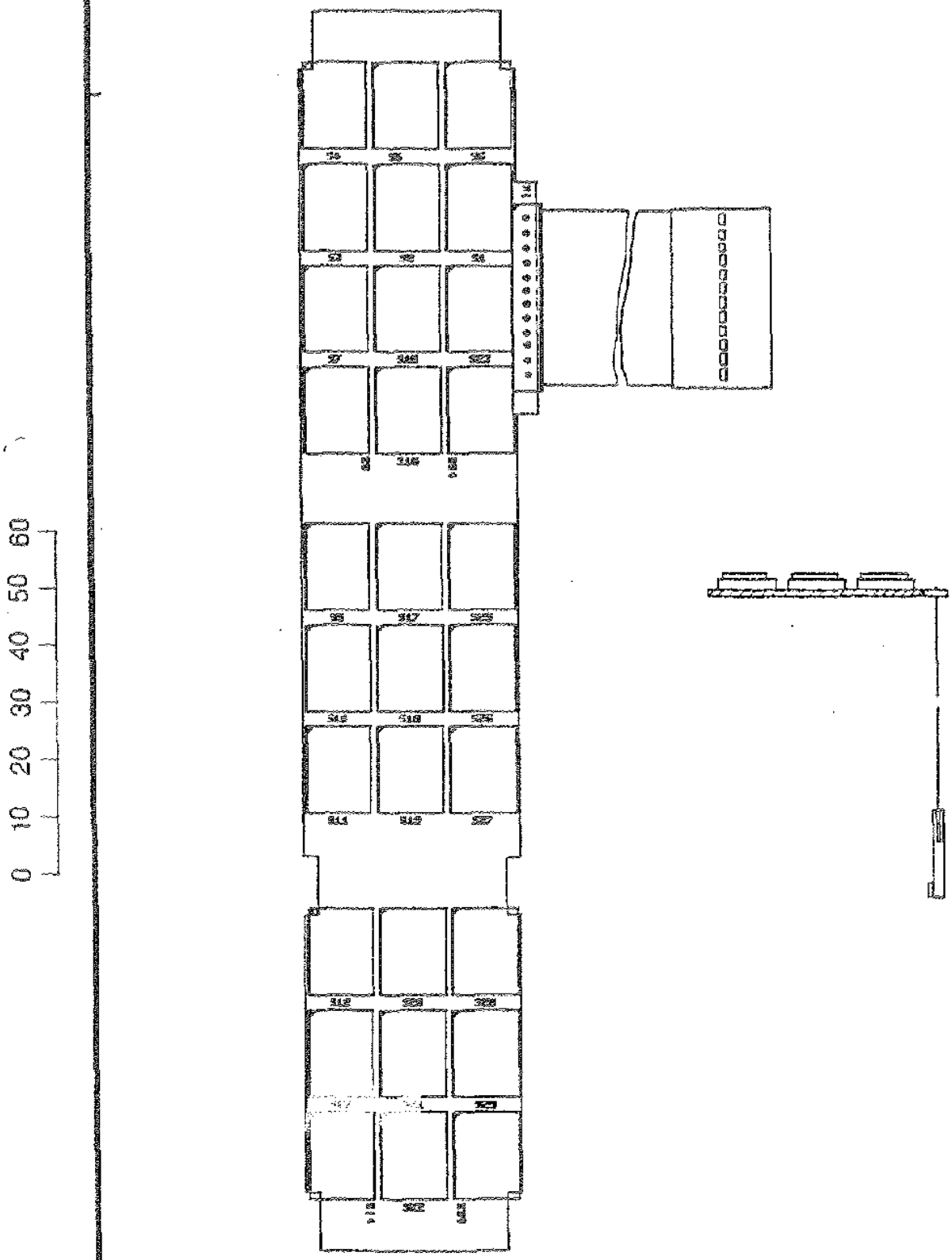

Yleistoleranssi: SFS 4011 hieno ☐ keski ☐ karkea ☐

Aine		Käsittely	
Piirt.	02.12.87 PM	Proto ☐ 0-sarja ☐ Tuotanto ☐	Suhde
Tark.	3.1.88	Tuote MCC 340	
Hyv.	3.1.88		
EFLAB Oy		Nimi NAPSU 2	Koodi 200 3570
		Component assembly	Piir.no 347-01-P-1

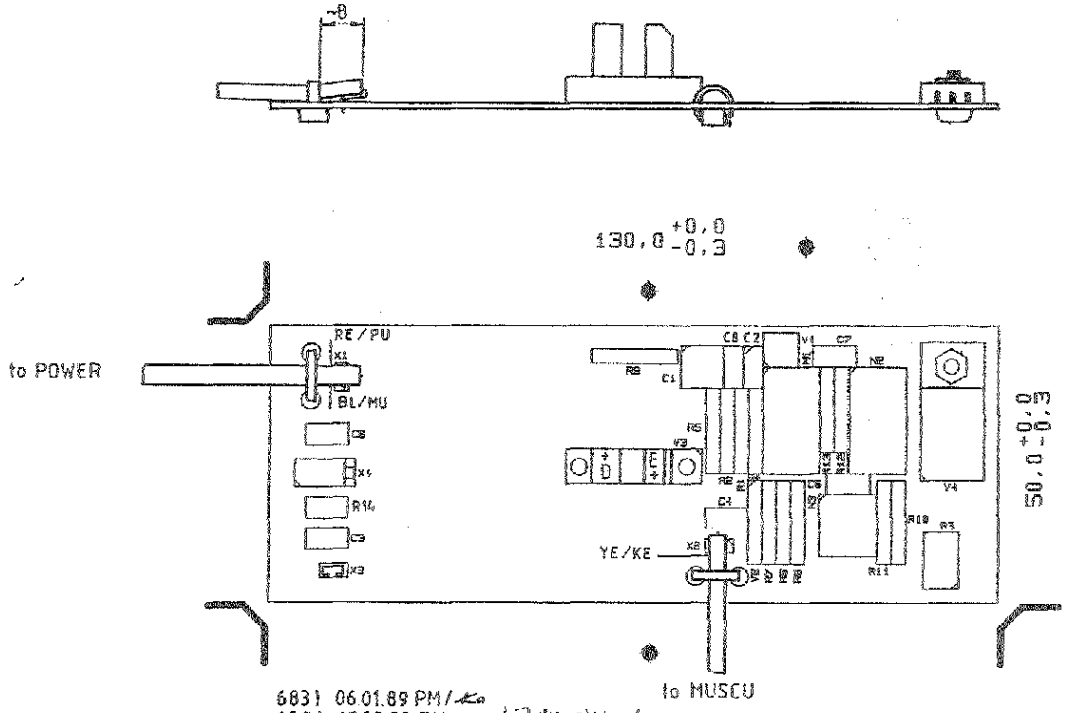

6831 06.01.89 PM/
6571 17.05.88 TM 1.7.88 AKe / 1.9.88

TULOST. MT CADAPS EFL 269	SK SK2	PINTAKASITTELY	JEP.EP 1/2 ISUM 2/2 ISUM EI ☐				TAUSTAPAINATUS 1/2 ☐ 2/2 ☒ EI ☐	
SUUNN. 17.12 87 PM	CU 35 UM	LEV.PAKSUUS 1.6 MM	MATERIAALI LASIKUITU-LAMIN. FR4	PINTA-ALA 65.0 CM²	PUOLI 2/2		REIAT METAL.	100 KPL
TARK. 21.12.87 AKe							ILMAN	7 KPL
HYV. 8.1.88 Uka	MCC 340				SUHDE		YHT.	107 KPL
EFLAB OY	NIMI CHOPT-01				1:1		KOODI 200 3680	
	NIMITYS COMPONENT ASSEMBLY						PIIRUSTUS N:O 347-09-P-02	

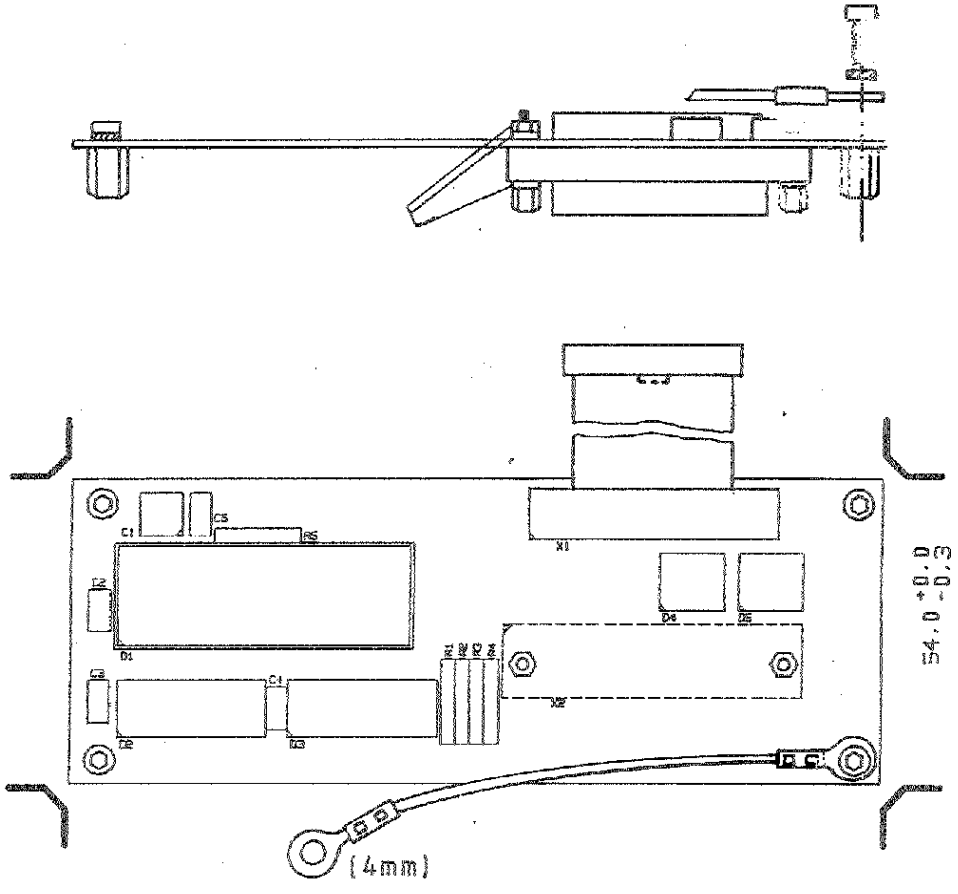

TILOST.	CADAPS EFL282	SK 2	PINTAKASITTELY	JEP.EP 1/2 15 2/2 15µM EI ☐		TAUSTAPAINATUS 1/2 ☐ 2/2 ☒ EI ☐	
SUUNN.	04.05.88 PM	CU 35 UM	LEV. PAKSUUS 1.6	MATERIAALI LASIKUITU-LAMIN. FR4	PINTA-ALA 77.8 CM²	PUOLI 2/2	RETAT METAL. KPL
TARK.	04.05.88 KPi						ILMAN KPL
HYV.	04.05.88 [illegible]	MCC 340				SUHDE 1:1	YHT. KPL
		NIMI MUCEN - 02					KOODI 200 3710
EFLAB OY						PIIRUSTUS N:O 747-10P-02	

02/1114	25.7.91	[illegible]	Lis. pos 12

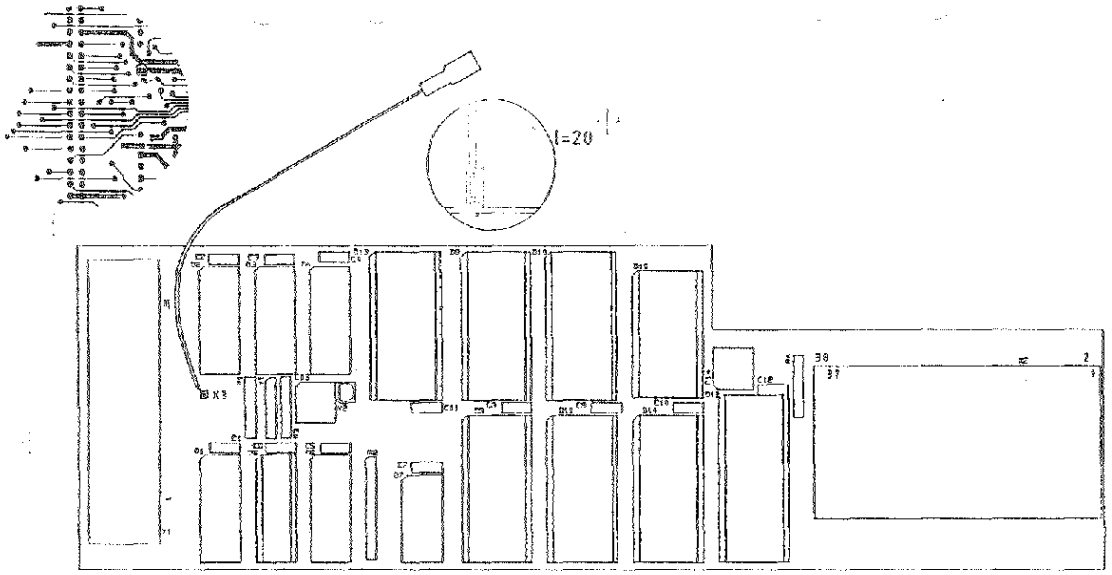

113/02	Lis. maadjohto	18.09.91	PHM						
TULOST	CADMIC KY	SK 2	PINTAK. TI/LY				HAUSTAP. VALK.		
SULK.	08.06.90 PHM	CU	LEV.PAKSUUS	MATERIAAL	PINTA-ALA	PUOLI	SEKAT AL	717	KPL
TARK.	6.8.90 HH	35 UM	1.5 MM	UK.LAM. PAK.	209 CM2	2/2	ULMAN	8	KPL
HYV.	6.8.90 JTO	LAITE				SUHDE	YHT.	725	KPL
LABSYSTEMS		LEVYN NIMI MUSMF-01				1 : 1	KOODI 200 2820		
		NIMITYS Component assembly				PIIRUSTUS.NO 349-02P-02			SIVU

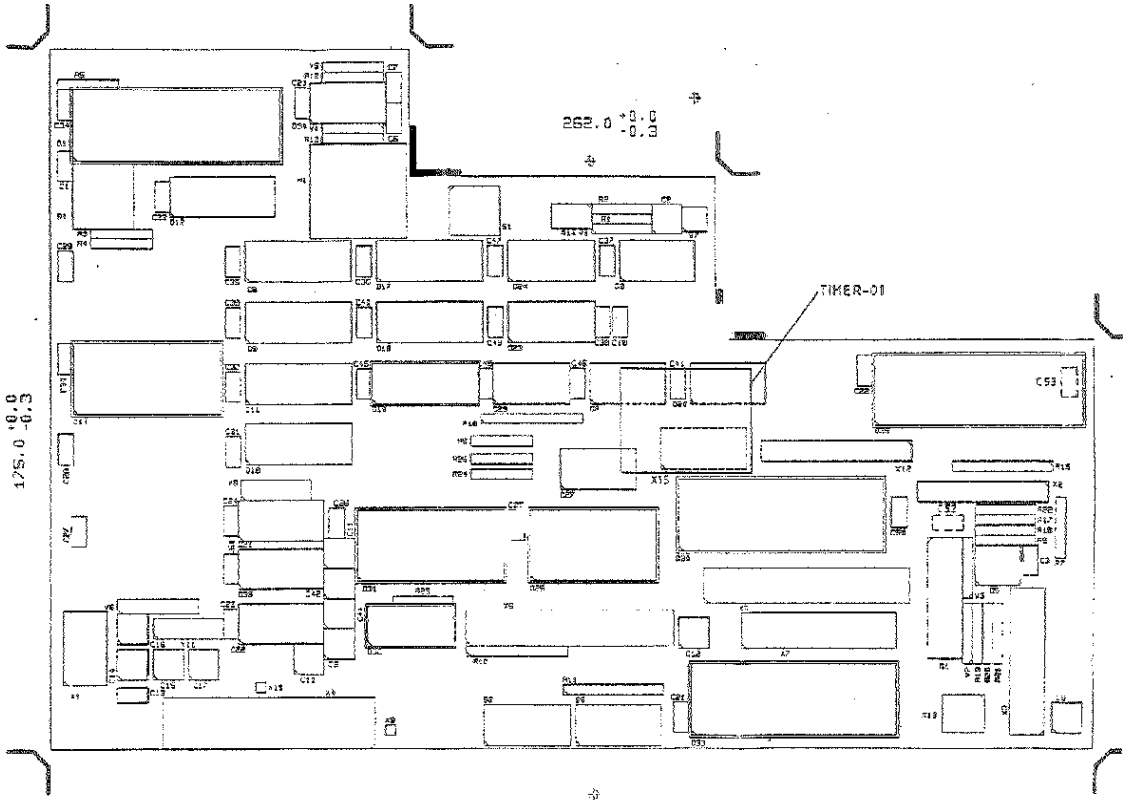

135	1.03.91	22.3.91	28.3.91	04	39-muutokset korvataan TIMER-01	
114	18.12.90	24.2.91	22.3.91	03	E2,C4,C5 poistettu muutoksilla hyppylangat	
105	23.11.90	26.11.90	27.11.90	02	Poist. D2, S2, X14	
Muutno	pvm	tark.	hyv.	versio	muutos	

TUOTT.	CADAPS EFL271	SK	3	PINTAKASITTELY	LEP CP 1/2 ISUM 2/2 ISUM E1	SIAPAINATUS 1/2 2/2 KOTI	
SUUNN.	08.08.90 PHM	KL		LEV. PAKSUUS	MATERIAALI PINTA-ALA	PUOLI	1406 KPL
TARK.	16.08.90 KM		35 UM	1.6 MM	LASIKUITU 351.2 cm² LAMIN. PEA	2/2	16 KPL
HYV.	10.8.90 JTU	MULTISKAN Multisoft				SUHDE	YHT. 1422 KPL
		NIMI	MUSCU-02A			1:1	NUMERO 200 3561
Labsystems		NIMITYS	COMPONENT ASSEMBLY			PIIRUSTUS N:O	349-03P-04

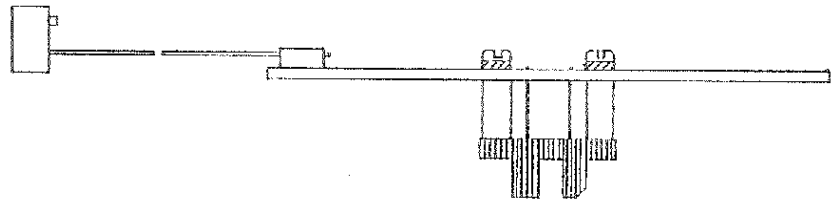

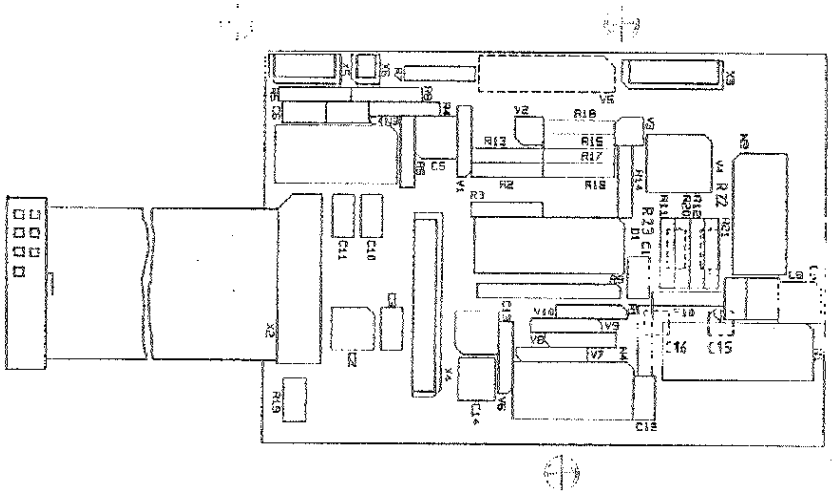

112(2)/02 Lis. C15,C16,R22 ja R23 18.01.91 PHM / 18.01.91 KH / 18.1.91 JTU

TULOST	CADMIC KY	SK 2	PINTAK. TI/LY☐	JUOT.EP. 75 UM 1/2☐ 2/2☐ EI☐		TAUSTAP. VALK. 1/2☐ 2/2☒ EI☐	
SUUN.	22.11.90 PHM	CU UM	LEV.PAKSUUS	MATERIAALI LK.LAM. FR4	PINTA-ALA 69.7 CM²	PUOLI 2/2	REIAT METAL KPL
TARK.	22.11.90 KH	LAITE					ILMAN KPL
HYV.	22.11.90 JTU					SUHDE 1 : 1	YHT. KPL
LABSYSTEMS		LEVYN NIMI MOTCU-03					KOODI 23[illegible]
		NIMITYS COMPONENT ASSEMPLY				PIIRUSTUS.NO 349-04P-02	SI[illegible]

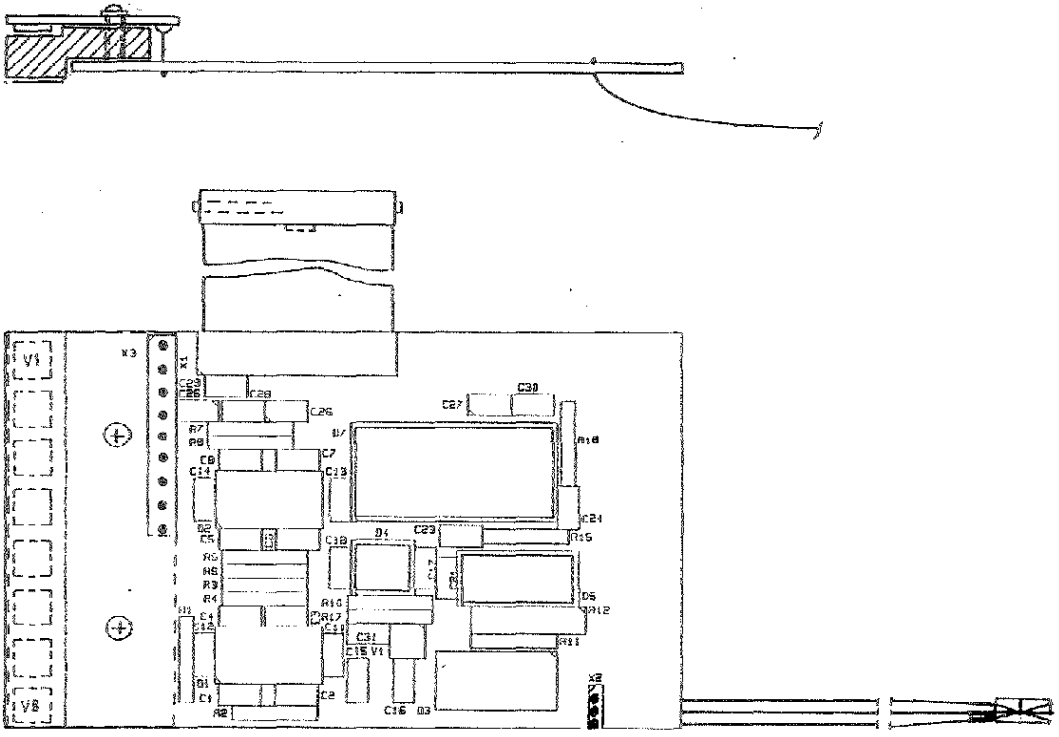

TILOST.	MT CADAPS EFL 278	SK 1	PINTAKASITTELY	JEP.EP 1/2 15UM 2/2 15UM EI ☐			TAUSTAPAINATUS 1/2 ☐ 2/2 ☒ EI ☐		
SUUNN.	11.11.91 PHM	CU	LEV.PAKSUUS	MATERIAALI	PINTA-ALA	PUOLI	REIAT METAL.	228	KPL
TARK.	11.11.91 KH	35 UM	1.6 MM	LASIKUITU-LAMIN. FR4	77.7 CM²	2/2	ILMAN	4	KPL
HYV.	11.11.91 JTO	MULTISOFT				SUHDE	YHT.	232	KPL
		NIMI MACU 2A				1:1	KOODI 200 3692		
		NIMITYS COMPONENT ASSEMBLY					PIIRUSTUS N:O 349-08P-01		

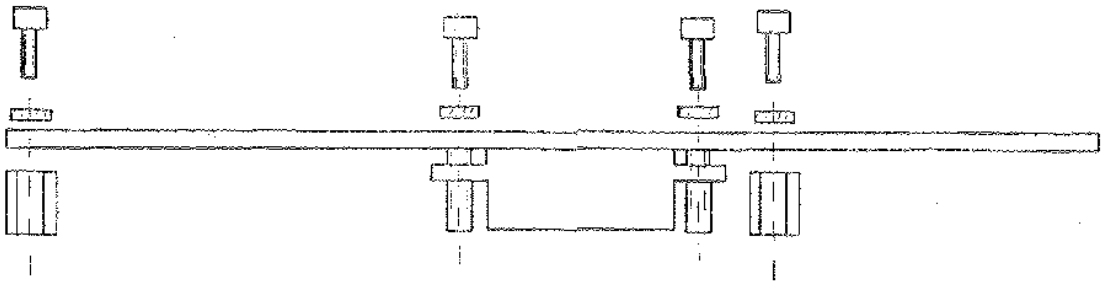

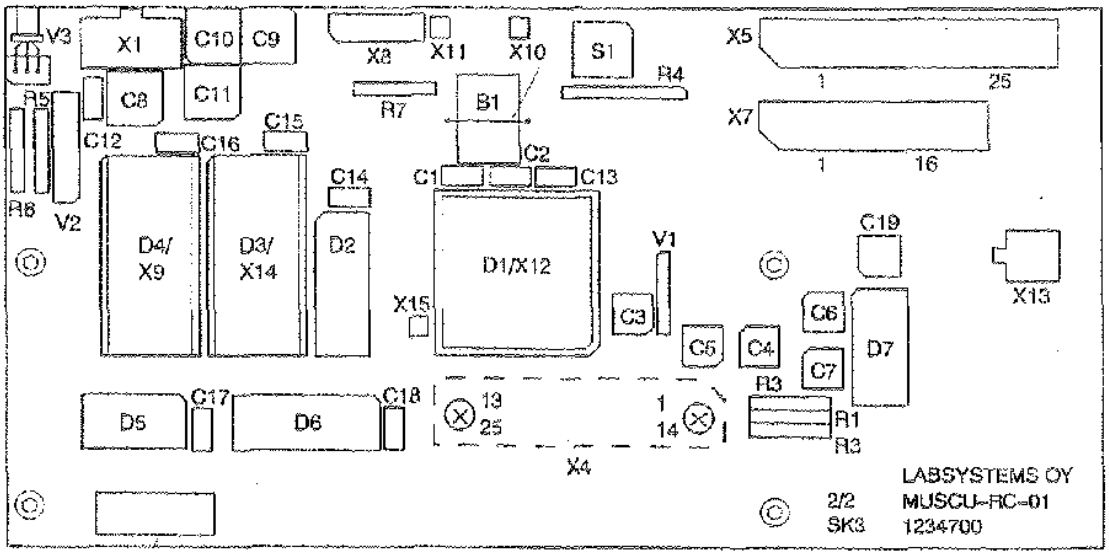

Drawer P-M	Version	01	02/1179				
	Draw up	11.2.94 PM	21.4.94 PM				
	Inspection	11.2.94 HTu	30.5.94 HTu				
	Approve	11.2.94 HTu	30.5.94 HTu				

MUSCU-RC-01
COMPONENT ASSEMBLY

Document Size	Scale	Page
A4	2	1/1

Labsystems

Code: 200 4150

Document number: 351-01P-02

PC / Designer v. 3,1 /C:\KJUVAT\RCFLEXI\MUSCURC.DRW

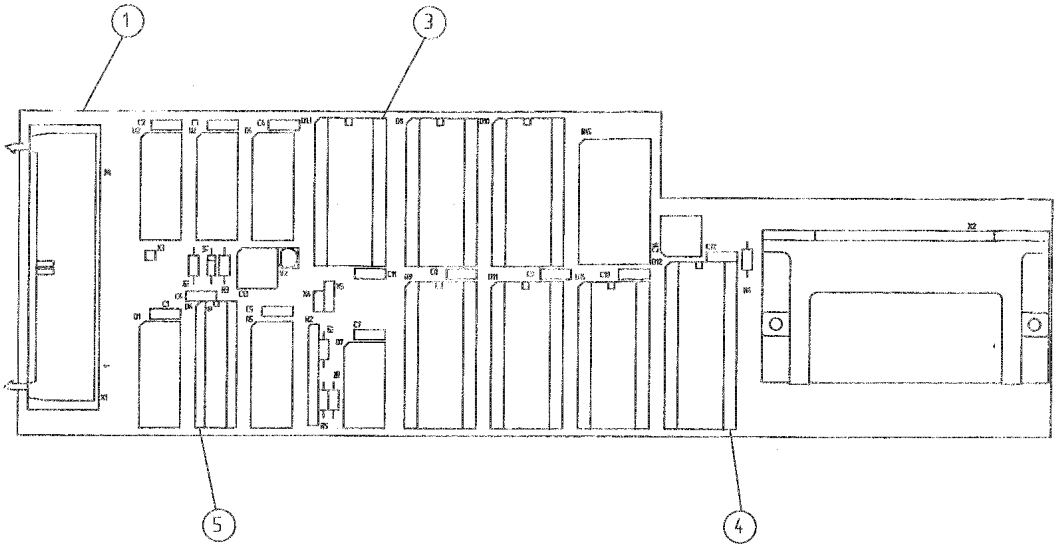

versio	viite	nro	muutos	piir!	suunn	tark	pvm	hyv
			pinnan laatu / aine	PM			2.10.96	
mitta-kaava			pinta-käsittely	piir no				sivu
yleisto-leraassi SFS 4011 keski			cad musme2as	352-04P-01				
Labsystems			nimi MUSME-02 COMPONENT ASSY	koodi 200 4370				

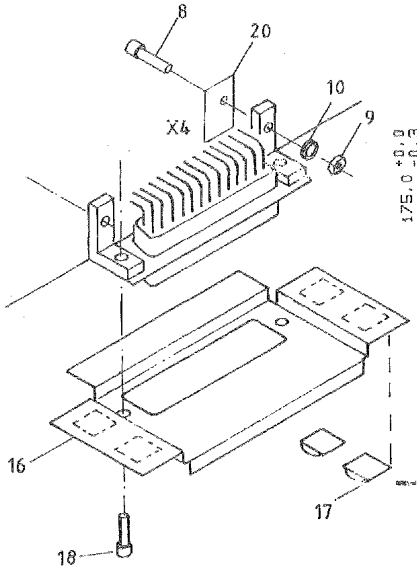

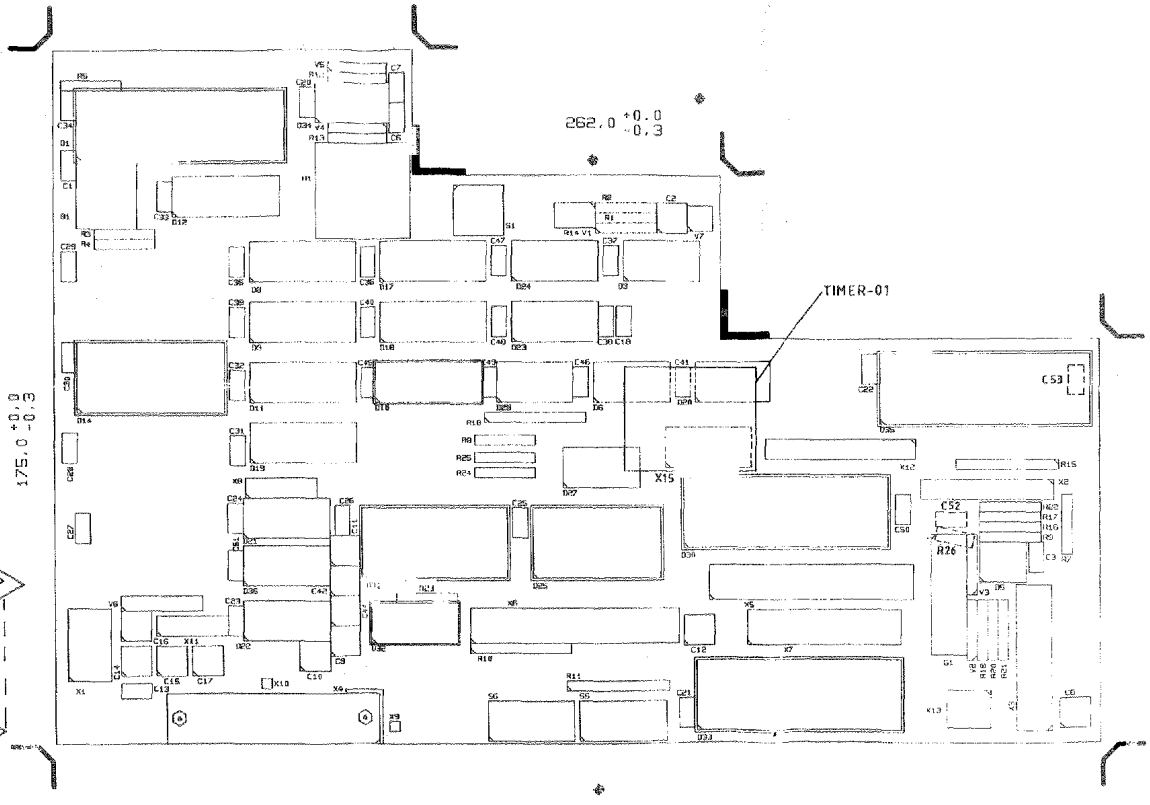

31	17.12.96	[illegible]	14.12.96 [illegible]	00	Lis. R26
25	5.12.96		5.12.96 [illegible]	02	Lis pos. 20, eristelevy
Muut.no	pvm	tark.	hyv.	versio	muutos

TULOST. MT CADAPS EFL271	SK	PINTAKASITTELY	JEP.EP 1/2 1SUM 2/2 1SUM EI	TALUSAINANTA 1/2 2/2 NO	
SUUNN. 5.11.96 PHM	CU	LEV.PAKSUUS	MATERIAALI	PINTA-ALA	PUOLI
TARK.	35 UM	1.6 MM	LASIKUITU-LAMIN. FR4	351.2 CM²	2/2
HYV. 5.11.96 [illegible]	MULTISKAN				SUHDE 1:1
	NIMI	MUSCU-03			
Labsystems	NIMITYS	COMPONENT ASSEMBLY			PIIRUSTUS NO 352-05P-03

REIA METAL.	1406	KPL
ILMAN	16	KPL
YHT.	1422	KPL
KOODI	2004380	

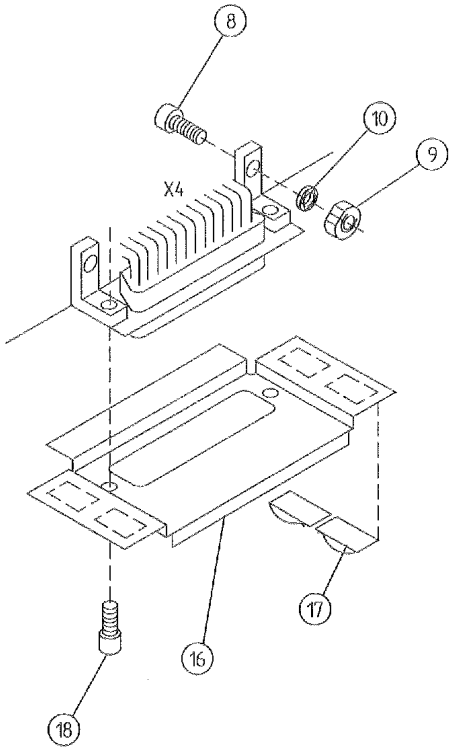

versio	viite	nro	muutos	piirt	suunn	tark	pvm	hyv
				PM	JPo	JPo	16.4.97	
mitta-kaava Z			pinnan laatu / aine / pinta-käsittely	piir. no 352-06P-01				sivu
yleisto-tarkkuus			CAD muscu4os					
Labsystems			nimi MUSCU-04 Component assy	koneel 200 4420				

Section 6

Schematic diagrams

Schematic diagrams

Contents

1) Only in Printer option
2) Only in Multiskan MS
3) Only in Agglutination option
4) Only in Multiskan RC

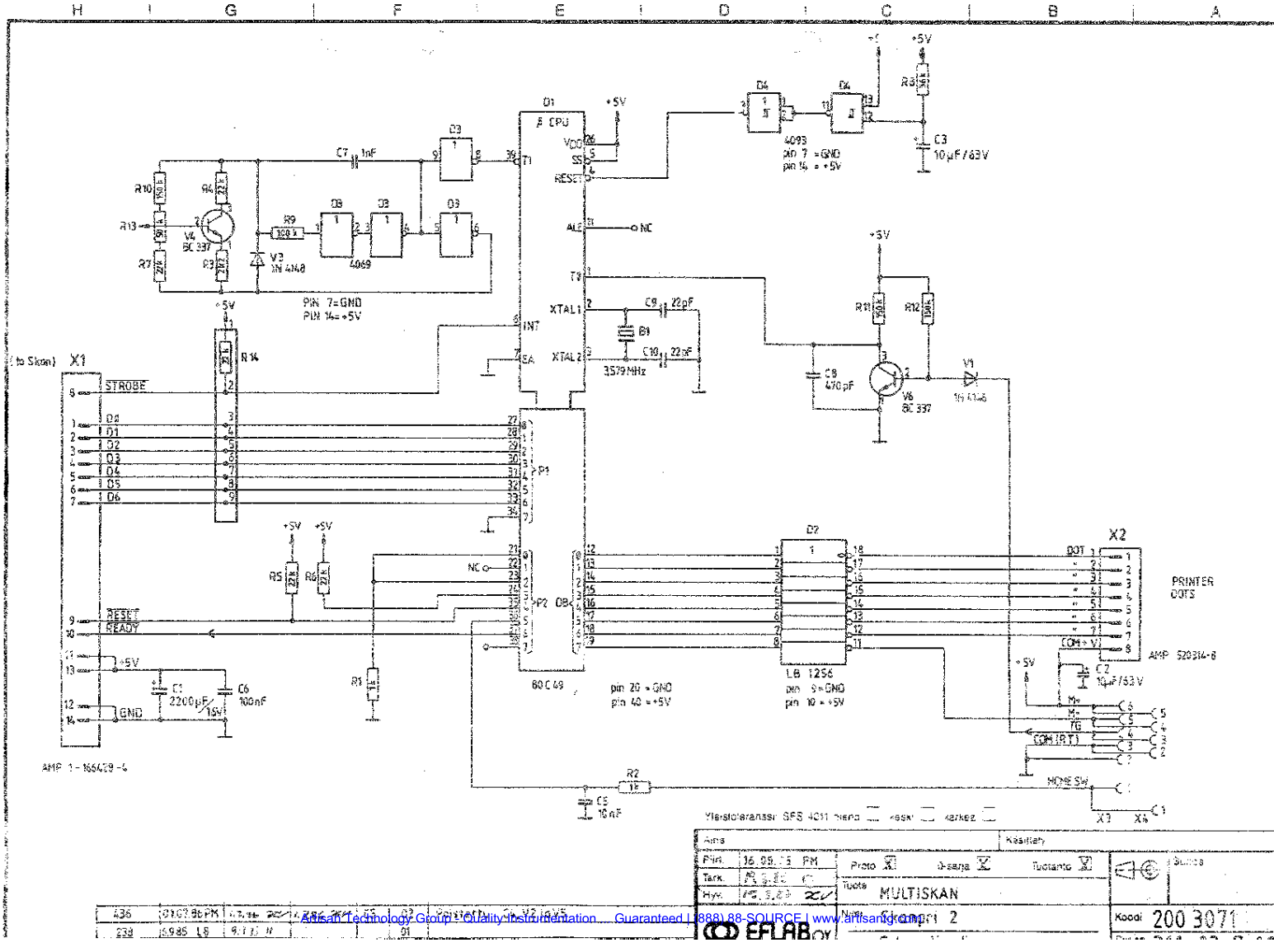

Yleistoleranssi SFS 4011 hieno ☐ keski ☐ karkea ☐

Aine		Käsittely
Piirt.	16.05.85 PM	Proto ☒ 0-sarja ☒ Tuotanto ☒
Tark.	5.85	Tuote MULTISKAN
Hyv.	5.85	Nimi Skeema 2

Suhde

Koodi 200 3071

EFLAB OY

436	01.07.86 PM				02	
238	6.9.85 LS	9.7.85			01	

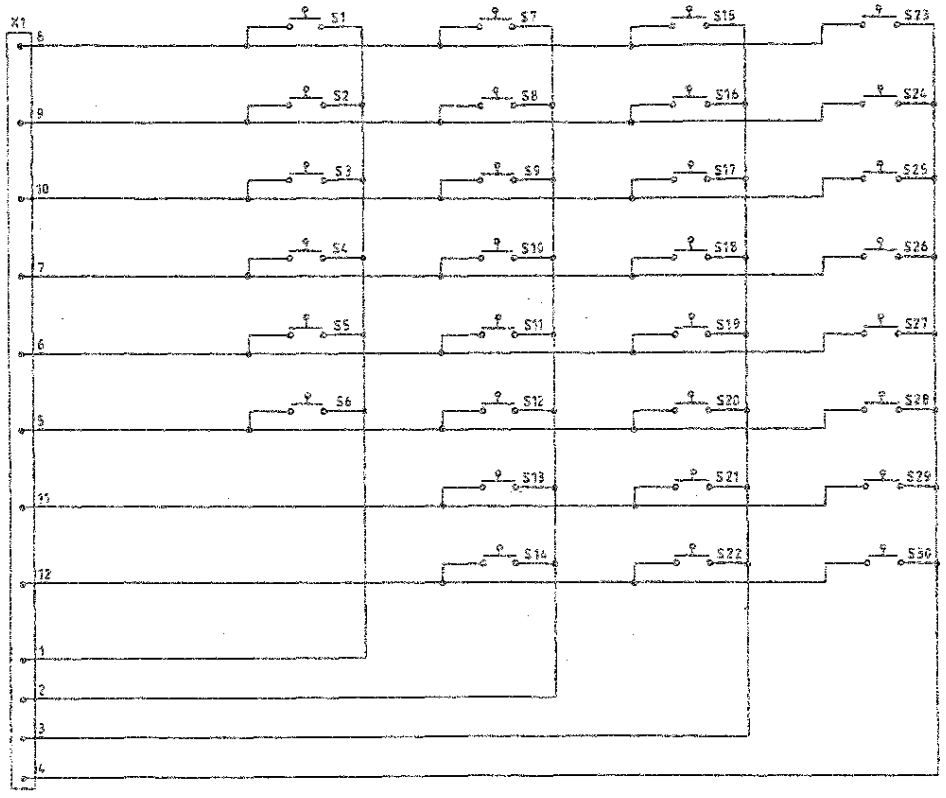

Yleistoleranssi: SFS 4011 tiheä ☐ keski ☐ harva ☐

Aine			Käsittely	
Pvm	21.10.87 PM	Proto ☐	0-sarja ☐	Tuotanto ☐
Tark		Tuote	MCC 340	
		NAPSU 2 Kytkentäkaavio		
		Schematic diagram		

D EFLAB OY

Koodi 200 3570

Piirros 347-01-S

Muutos nro | Pvm/Muut | Pvm/tark | Pvm/hyv | Korv. | Muutos

Muutos n:o	Pvm/muutt.	Pvm/tark.	Pvm/hyv.	Viite	Versio	Muutos

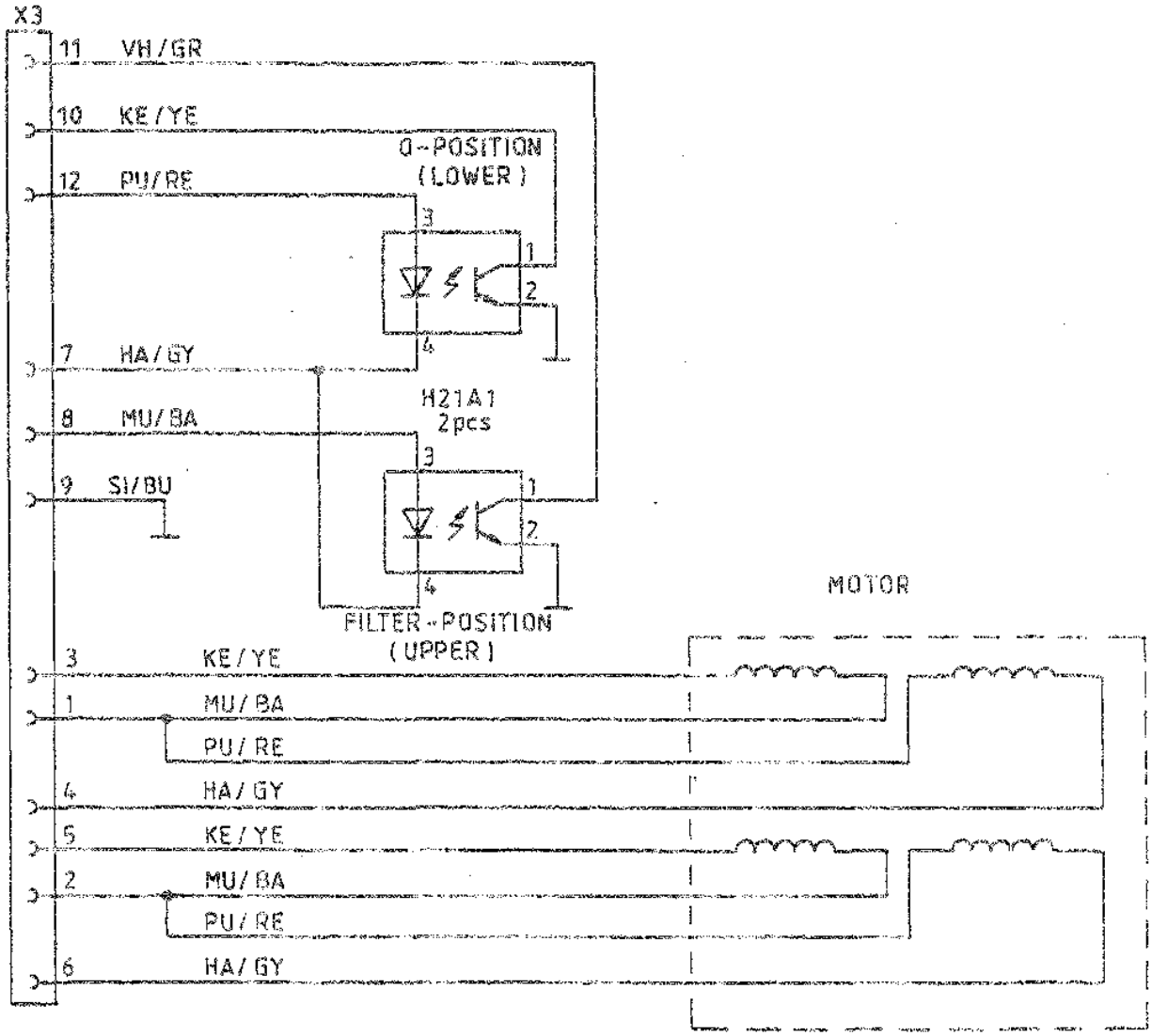

Yleistoleranssi: SFS 4011 hieno ☐ keski ☐ karkea ☐

Aine		Käsittely	
Piirt. 19.10.87 PM	Proto ☐ 0-sarja ☐ Tuotanto ☐		Suhde
Tark. 30.10.87	Tuote MCC 340		
Hyv. 30.10.87			
EFLABOY	Nimi Filter motor assembly Schematic diagram	Koodi 210 3940	Piir.no 347-08-S

Muutos n:o	Pvm/muutt.	Pvm/tark.	Pvm/hyv.	Viite	Versio	Muutos
657	28.6.88 TM	1.7.88 AK	1.7.88		01	
693	22.3.89PHM	22.3.89 AK	23.03.89		02	R12 → 2k21

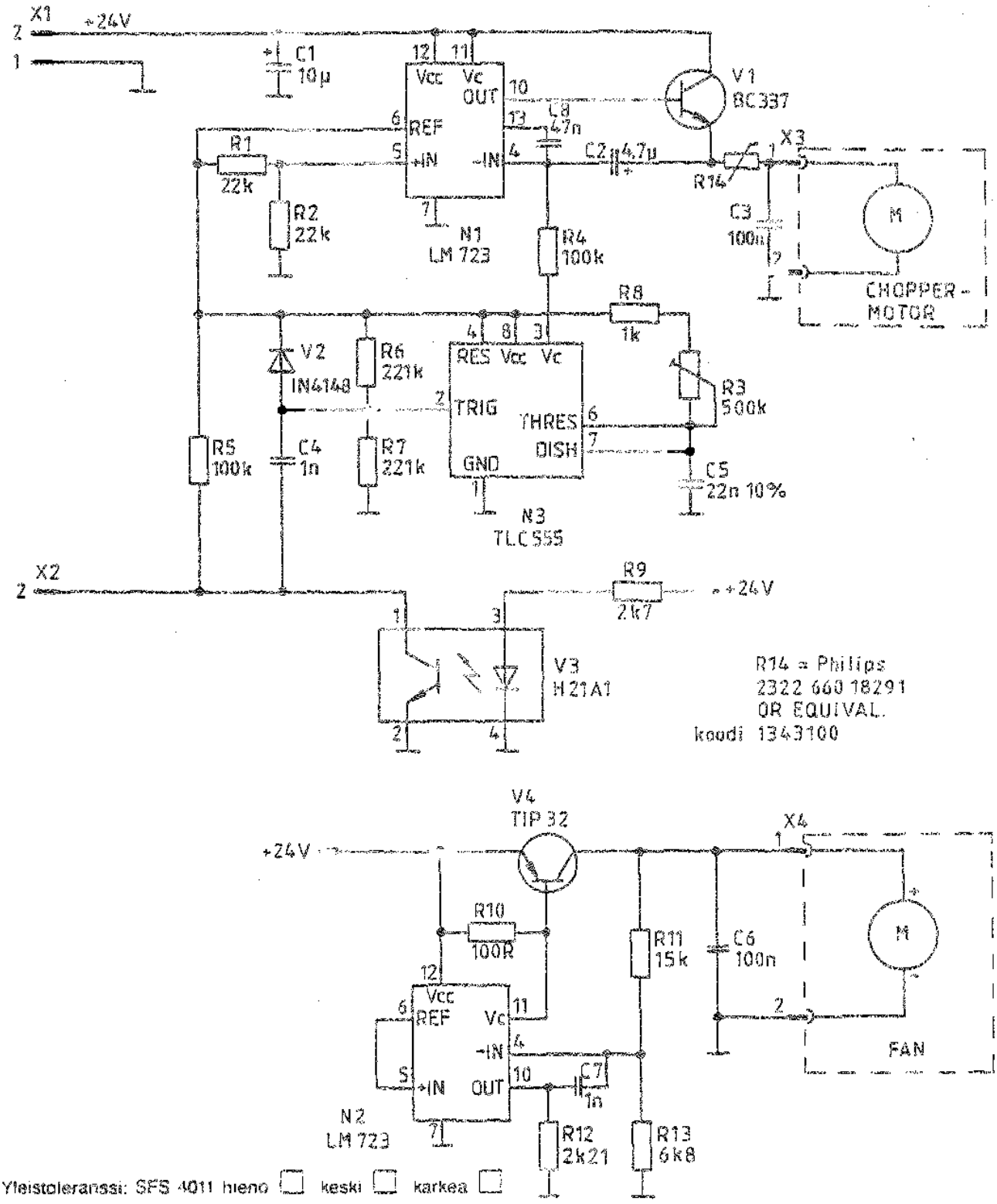

Yleistoleranssi: SFS 4011 hieno ☐ keski ☐ karkea ☐

Aine		Käsittely	
Piirt. 16.12.87 PM	Proto ☐ 0-sarja ☐ Tuotanto ☐		Suhde
Tark. 21.12.87 AK	Tuote MCC 340		
Hyv. 1.1.88			
EFLAB OY	Nimi CHOPT-01 Kytkentäkaavio	Koodi 200 3680	
	SK2 Schematic diagram	Piir.no 347-09-S-02	

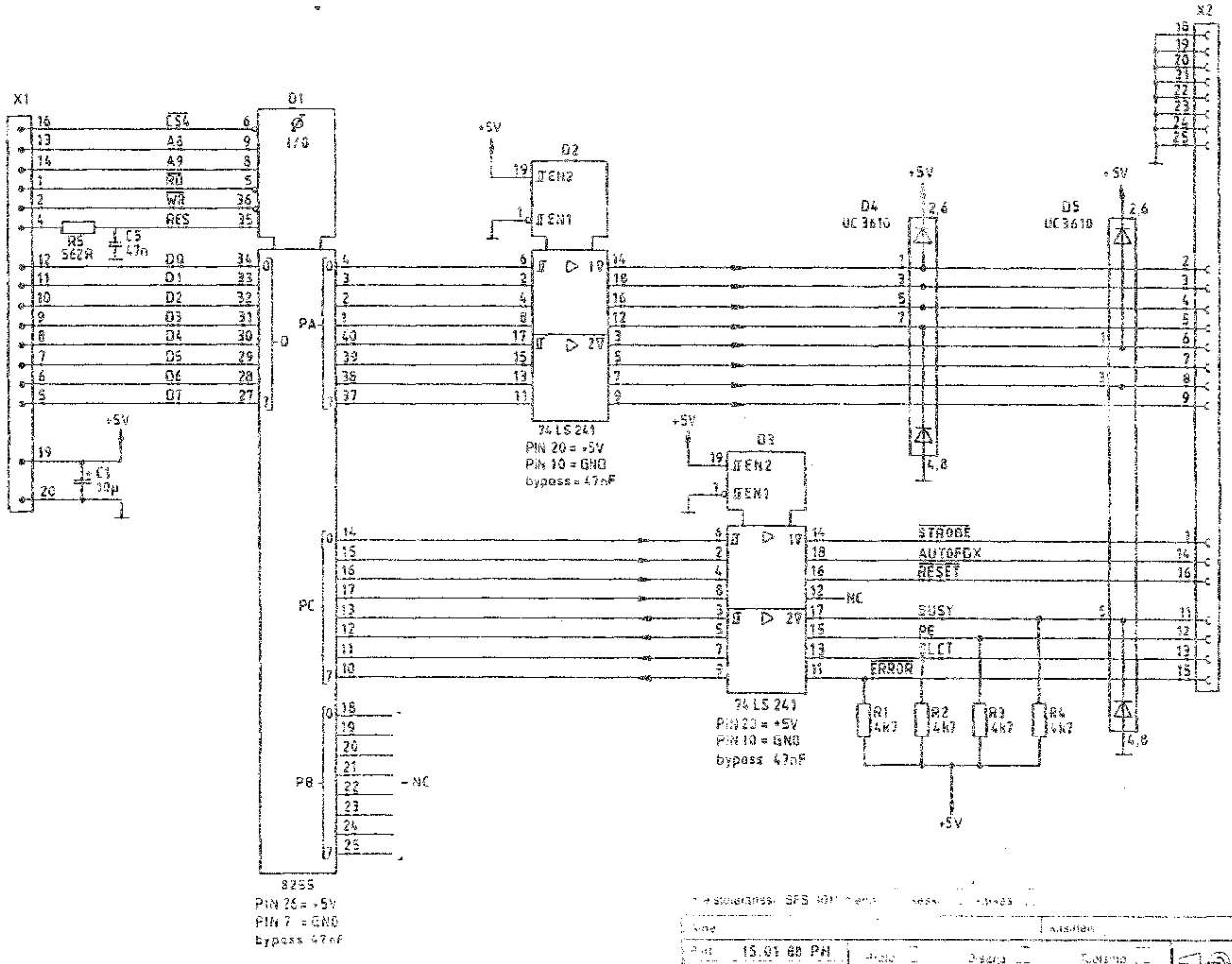

21.01.88

15.01.88 PH

18.01.88 KPI

MCC 340

MUCSN-02 Kytkentäkaavio

EFLAB OY

Koko

200 3710

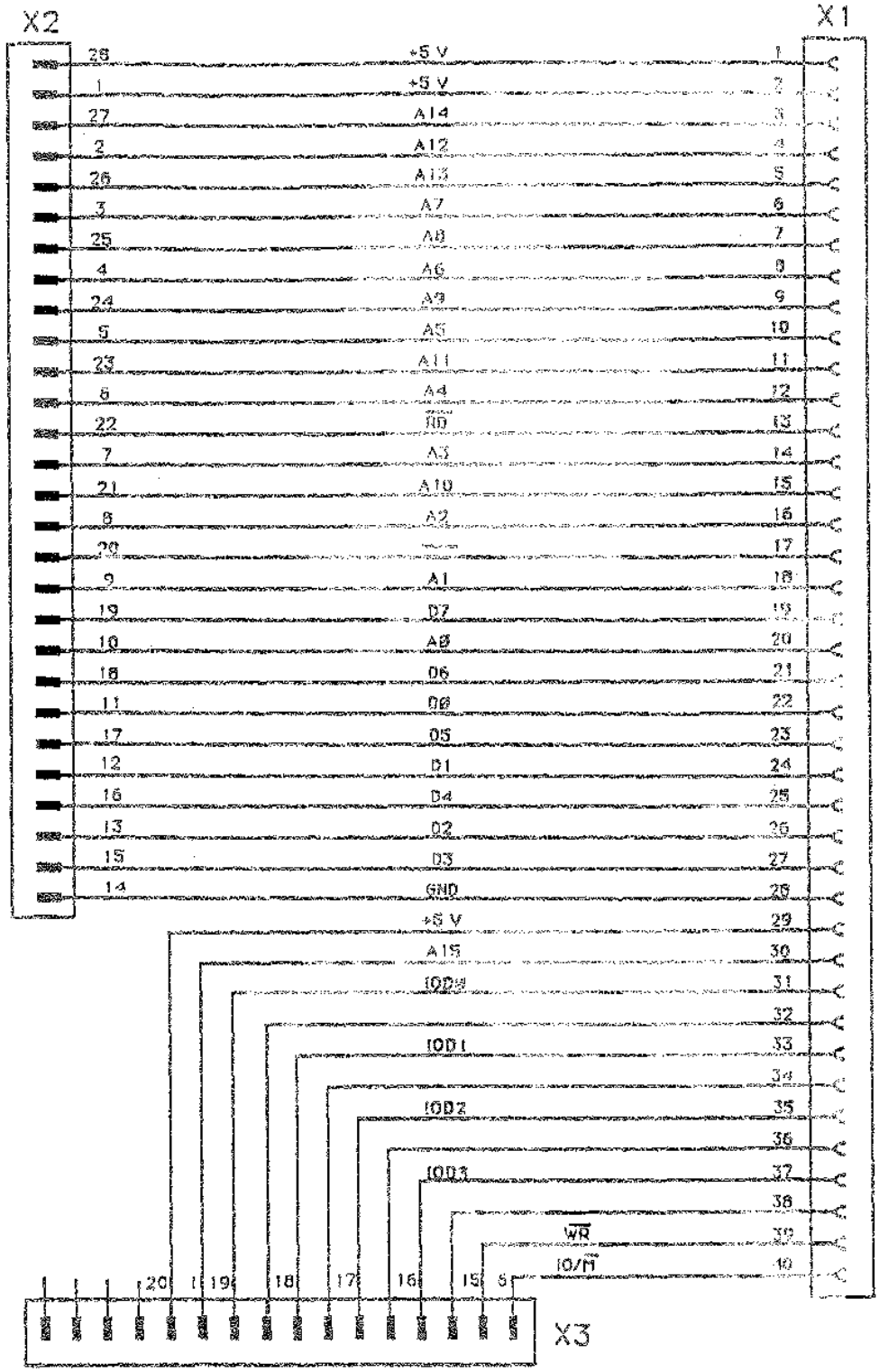

Piirt. KH	Versio	01
	Laat.	1.8.90 KH
	Tark.	2.8.90 KH
	Hyv.	JTO
	H.pvm.	6.8.90

MUSCU – MUSME cable

Schematic diagram

Piir.koko A4 | Z | vu 1/1

Labsystems

Koodi 2303260

Piir.nro 349-01 S-01

☒ tuotanto ☐ 0-sarja ☐ proto

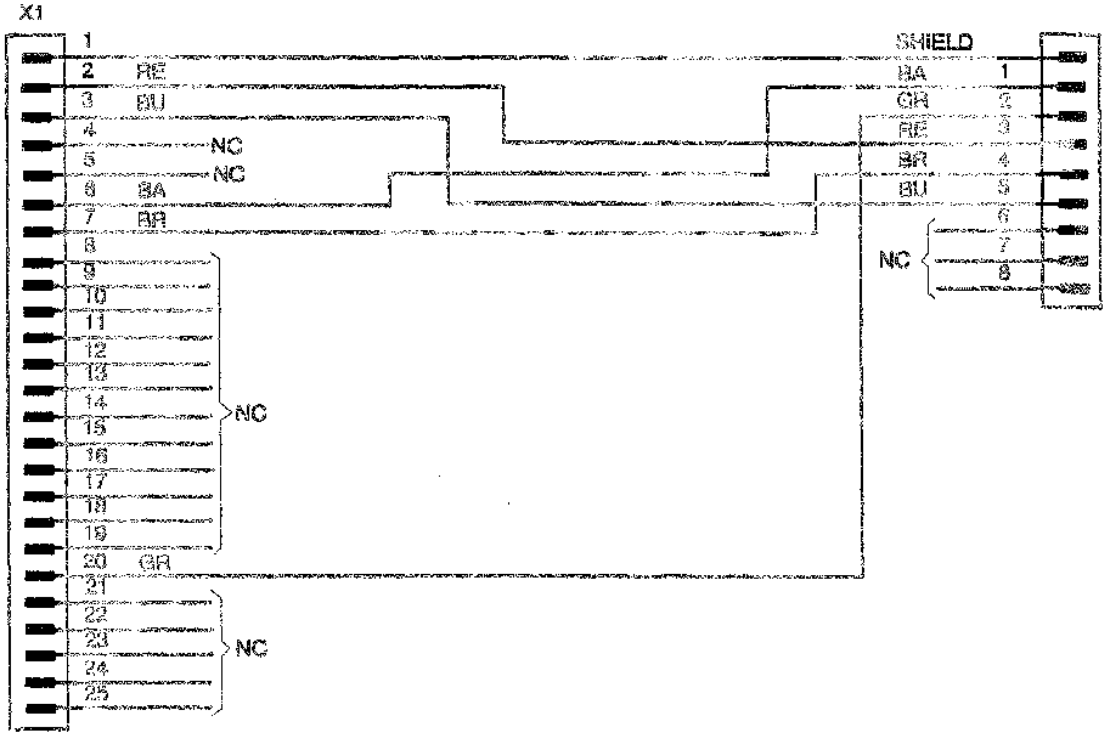

Drawer PHM	Version	01				
	Draw up	28.03.94 PHM				
	Inspection	29.3.94				
	Approve	29.3.94				

Serial Cable
Multiskan MS-MAC
Schematic Diagram

Document Size	Scale	Page
A4	Z	1/1

Code 230 3950

Labsystems

Document number 35201S-01

PC / Designer v. 3.1 / 35201S01.DRW

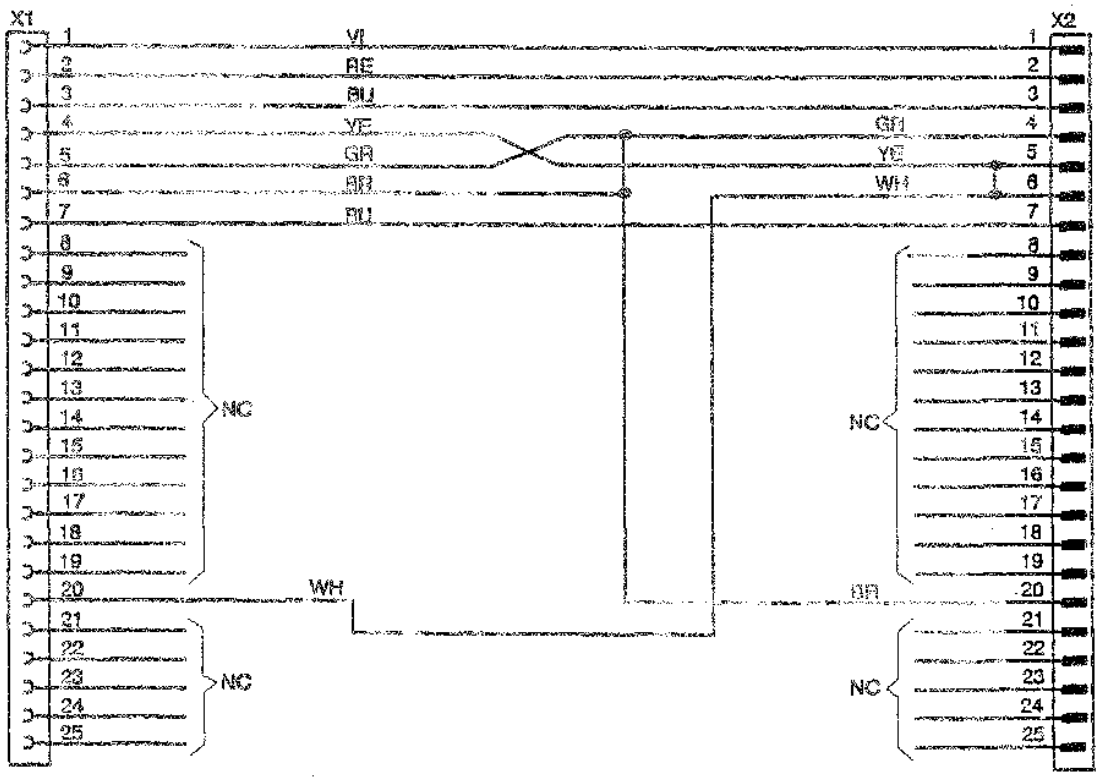

PHM	Version	01					
	Draw up	29.03.94 PHM					
Drawer	Inspection	27.3.94					
	Approve	27.3.94					

Serial Cable
Multiskan MS-PC
Schematic Diagram

Document Size	Scale	Page
A4	Z	1/1

Labsystems

Code: 230 3863

Document number: 362-029 01

PC / Designer v. 3.1 / 36x02ism.DRW

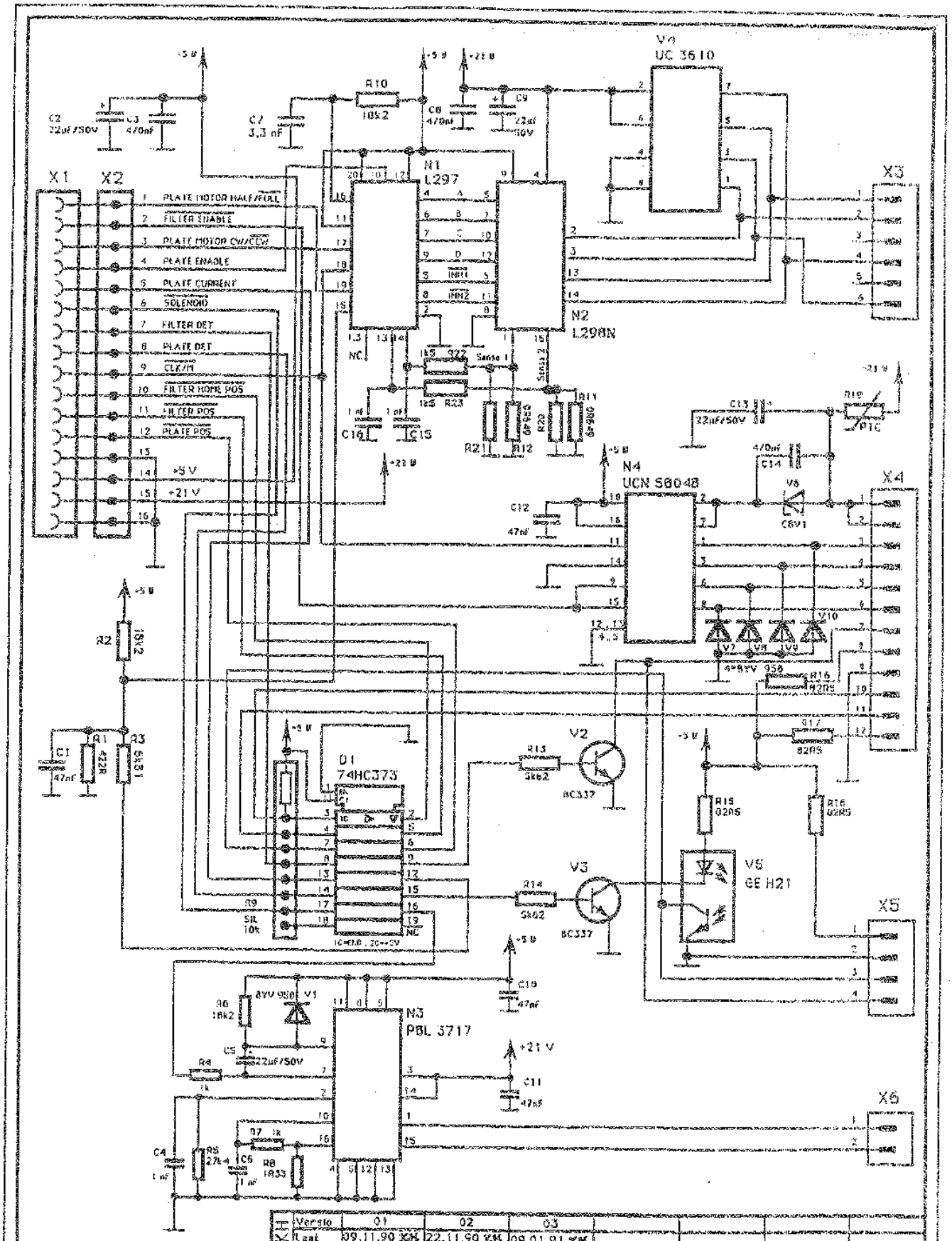

Huom.
Jos vastuksia R11 ja R12 ei ole saatavilla muodostetaan oikean arvoinen vastus kaavioon merkittyjen vastusten R20 ja R21 avulla siten että
R11//R20 = 0,649 Ω ±5% ja
R12//R21 = 0,649 Ω ±5%

Piir.	Versio	01	02	03
	Laat.	09.11.90 XM	22.11.90 XM	09.01.91 XM
	Tark.	12.11.90 XM	22.11.90 XM	09.01.91 XM
	Hyv.	JTu	JTu	JTu
	H.svm.	12.11.90	23.11.90	9.1.91

MOTCU-03

Schematic diagram

Piir. koko	Suhde	Sivu	
A3	Z	1/1	Labsystems

Koodi	Piir. no
2002890	349-04 S-03

☒ Evolanto
☒ 0-sarja
☒ proto

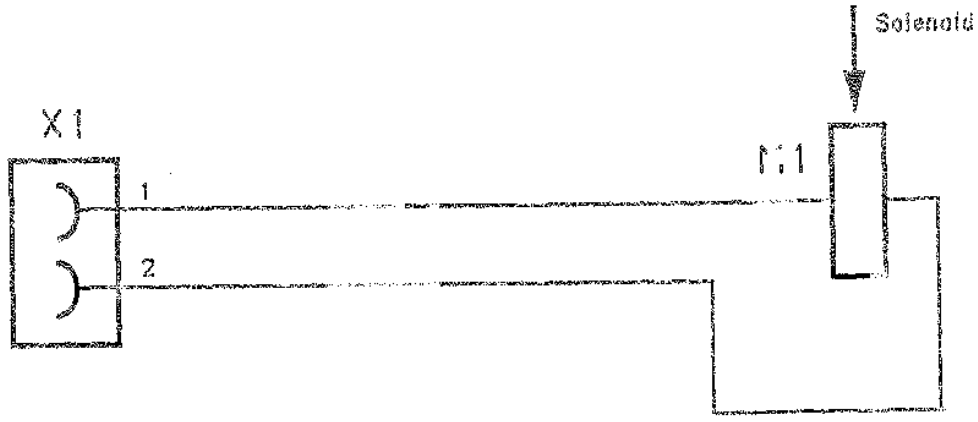

Piirt. KH	Versio	01						
	Laat.	7.11.90 KH						
	Tark.	7.11.90 KH						
	Hyv.	JR						
	H.pvm.	12.11.90						

MULTISOFT	Piir.koko A4	Suhde Z	Sivu 1/1
Solenoid	Koodi 2102460		Piir.no 349-05 S-01
Schematic diagram			

Labsystems

☒ tuotanto ☒ 0-sarja ☒ proto

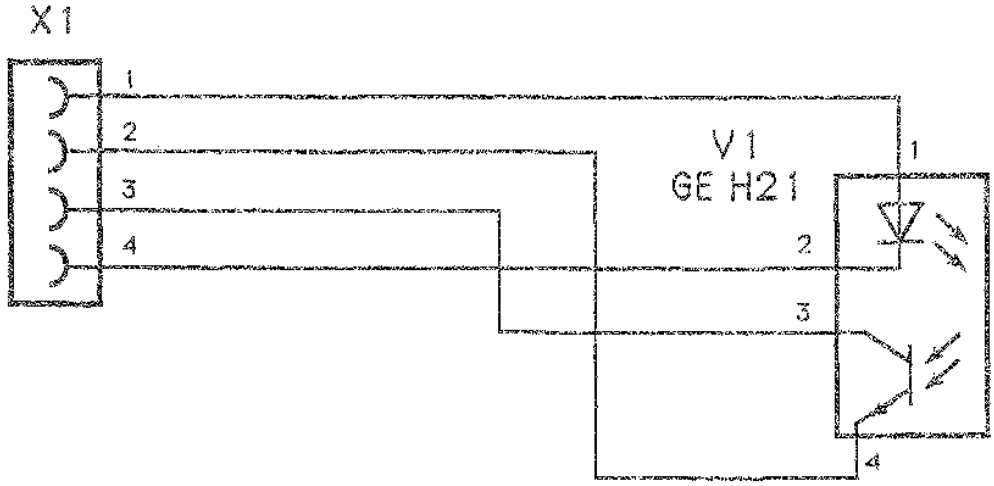

Piirt. KH	Versio	01						
	Laat.	7.11.90 KH						
	Tark.	7.11.90 KH						
	Hyv.	JTo						
	H.pvm.	12.11.90						

MULTISOFT

IR-Reader assembly

Schematic diagram

Piir.koko	Suhde	Sivu
A4	Z	1/1

Labsystems

Koodi: 2102510

Piir.no: 349-06 S-01

☒ proto ☒ 0-sarja ☒ tuotanto

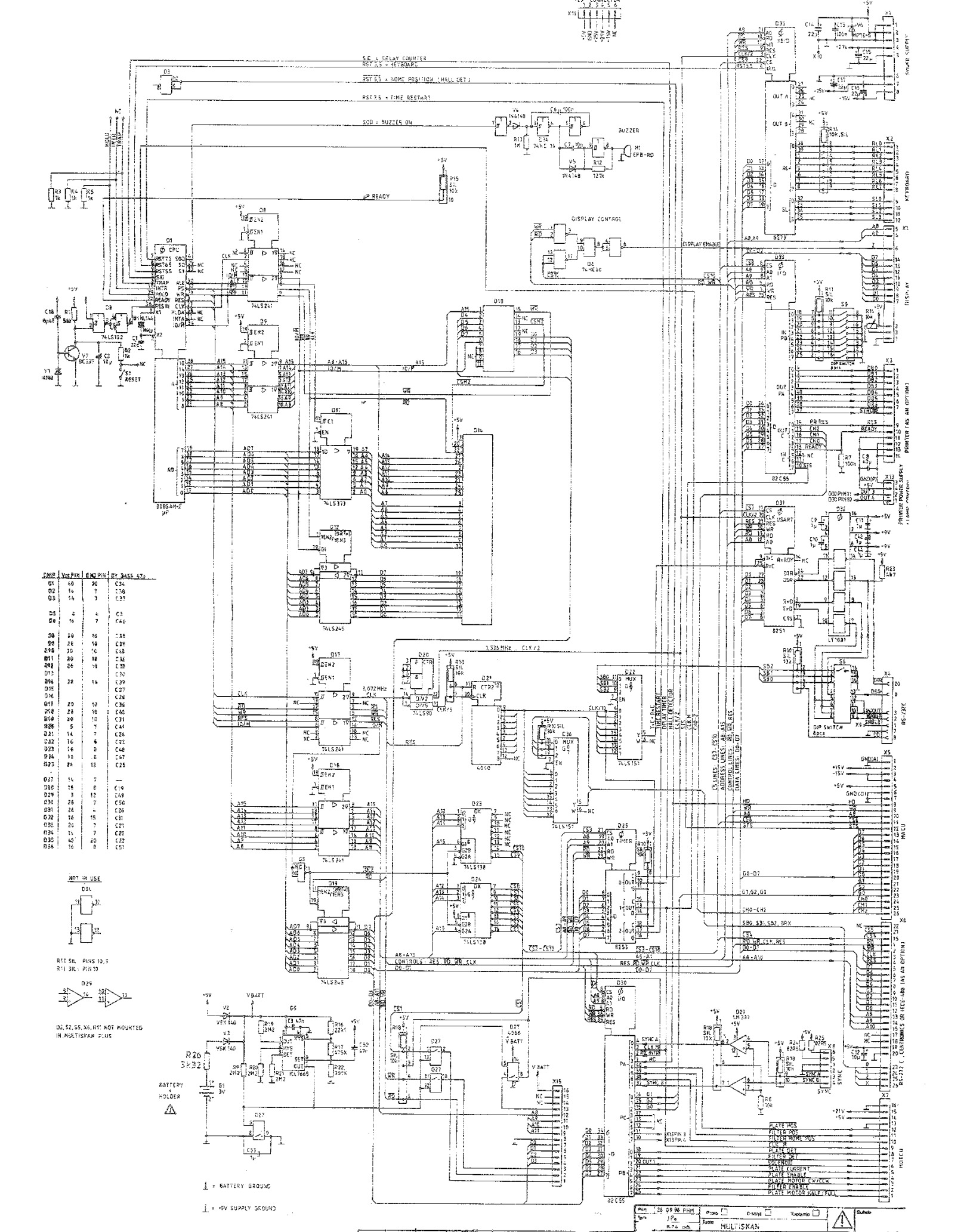

PINS	Vcc PIN	GND PIN	BY 8255 (?)
D1	40	20	C24
D2	14	7	C38
D3	14	7	C37
D5	3	4	C3
D6	14	7	C40
D8	20	10	C38
D9	20	10	C39
D10	20	10	C35
D11	20	10	C36
D12	20	10	C39
D13			C30
D14	28	14	C39
D15			C27
D16			C28
D17	20	10	C36
D18	20	10	C40
D19	20	10	C31
D20	5	7	C44
D21	14	7	C24
D22	16	8	C22
D23	16	8	C48
D24	16	8	C47
D25	24	12	C25
D27	14	7	—
D28	16	8	C19
D29	3	12	C49
D30	26	7	C50
D31	26	4	C26
D32	16	15	C11
D33	26	7	C21
D34	14	7	C20
D35	40	20	C22
D36	16	8	C51

NOT IN USE

D34

R10 SIL : PINS 10,9
R11 SIL : PIN 10

D29

D2, S2, S5, X6, R11 NOT MOUNTED IN MULTISKAN PLUS

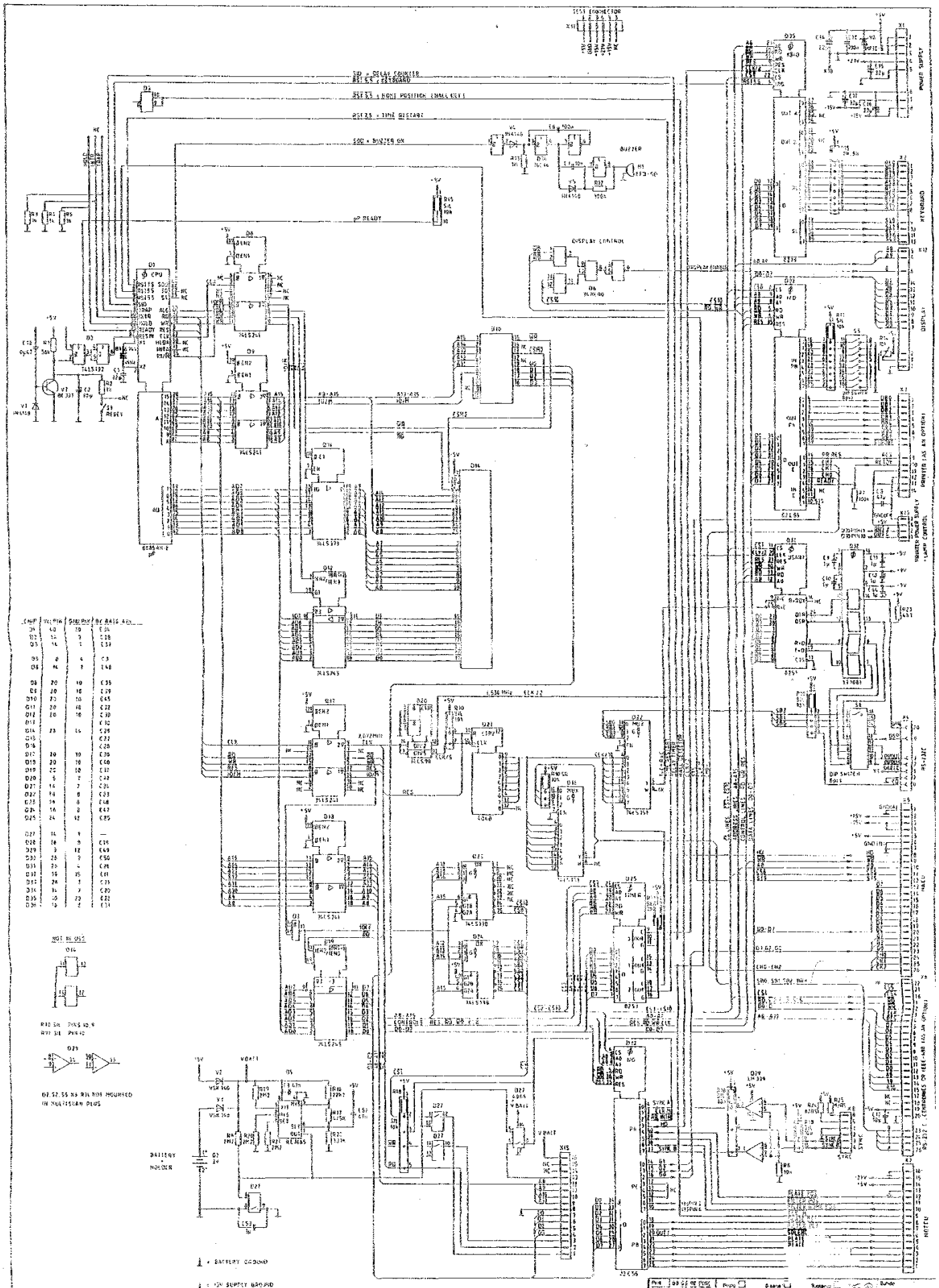
MULTISKAN Multisoft
Labsystems
Schematic diagram
KEYBOARD
DISPLAY
POWER SUPPLY
BUZZER
DISPLAY CONTROL
CPU
BATTERY
NOECKER

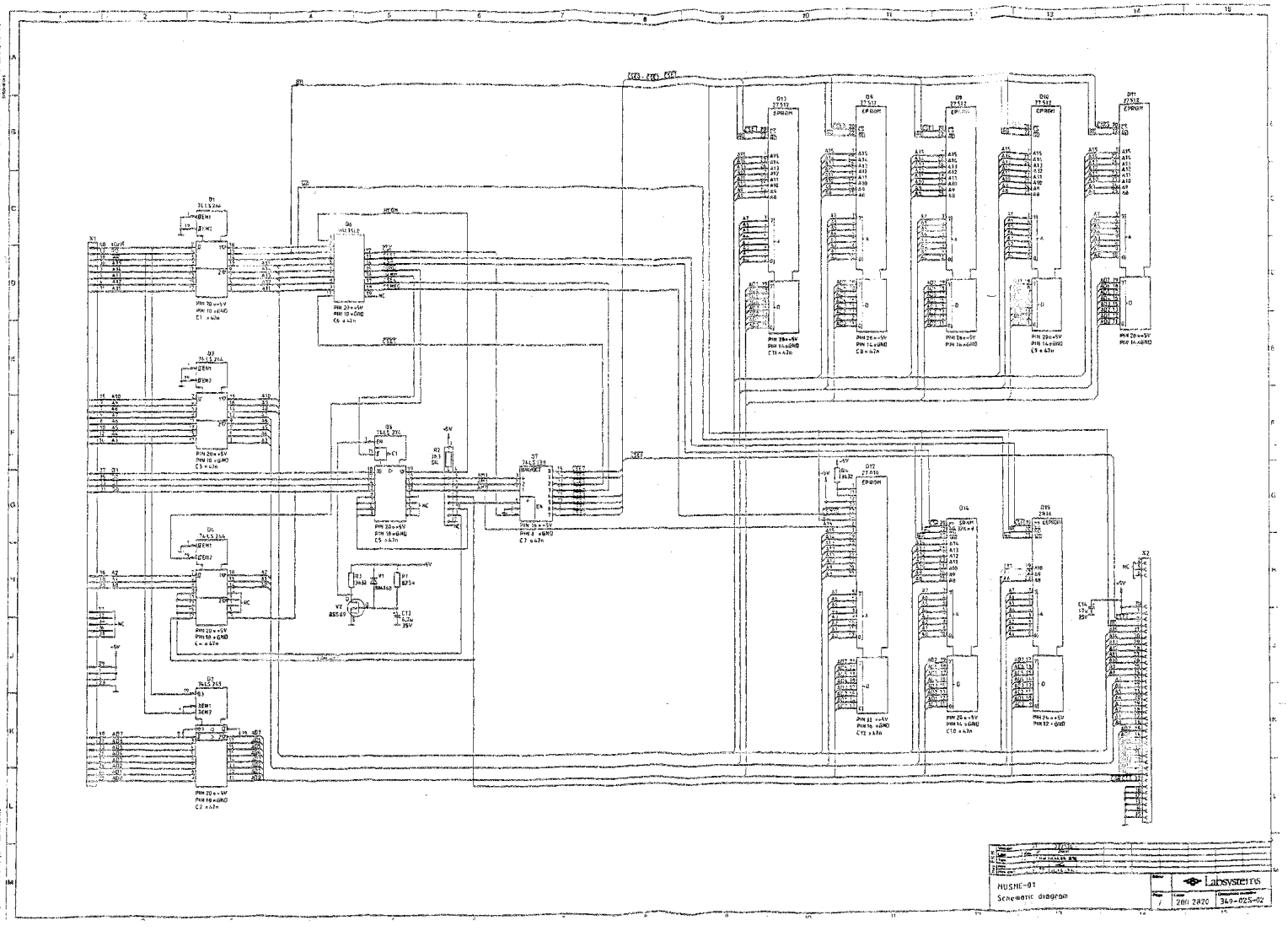

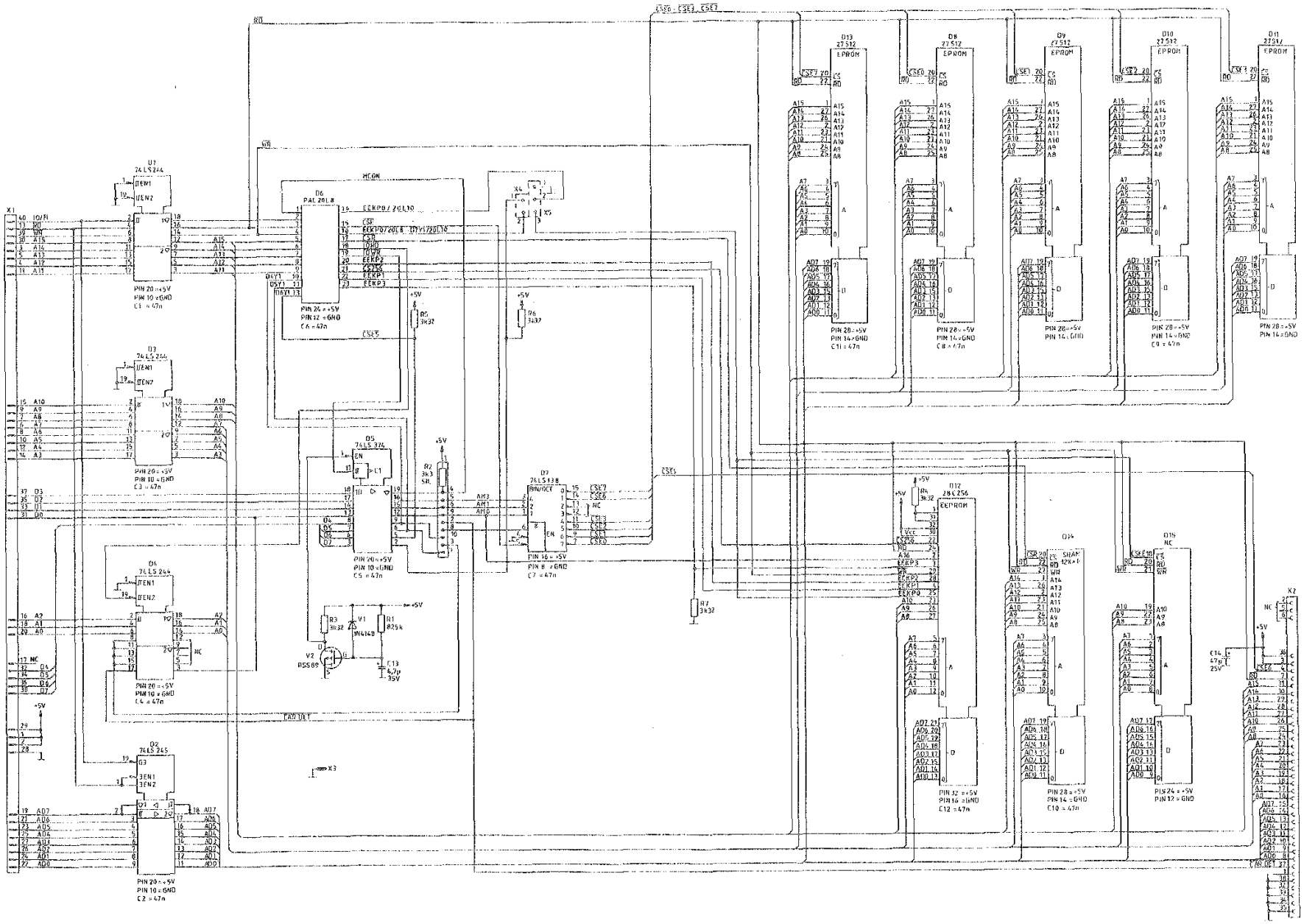

Version	01		
Last	1.10.96		
Date			
Name			
Appr.			
Appr. date	8.10.96		

MUSME-02
Schematic diagram

Page 1

Code 200 A370

Document number 352-045-01

Lifesystems

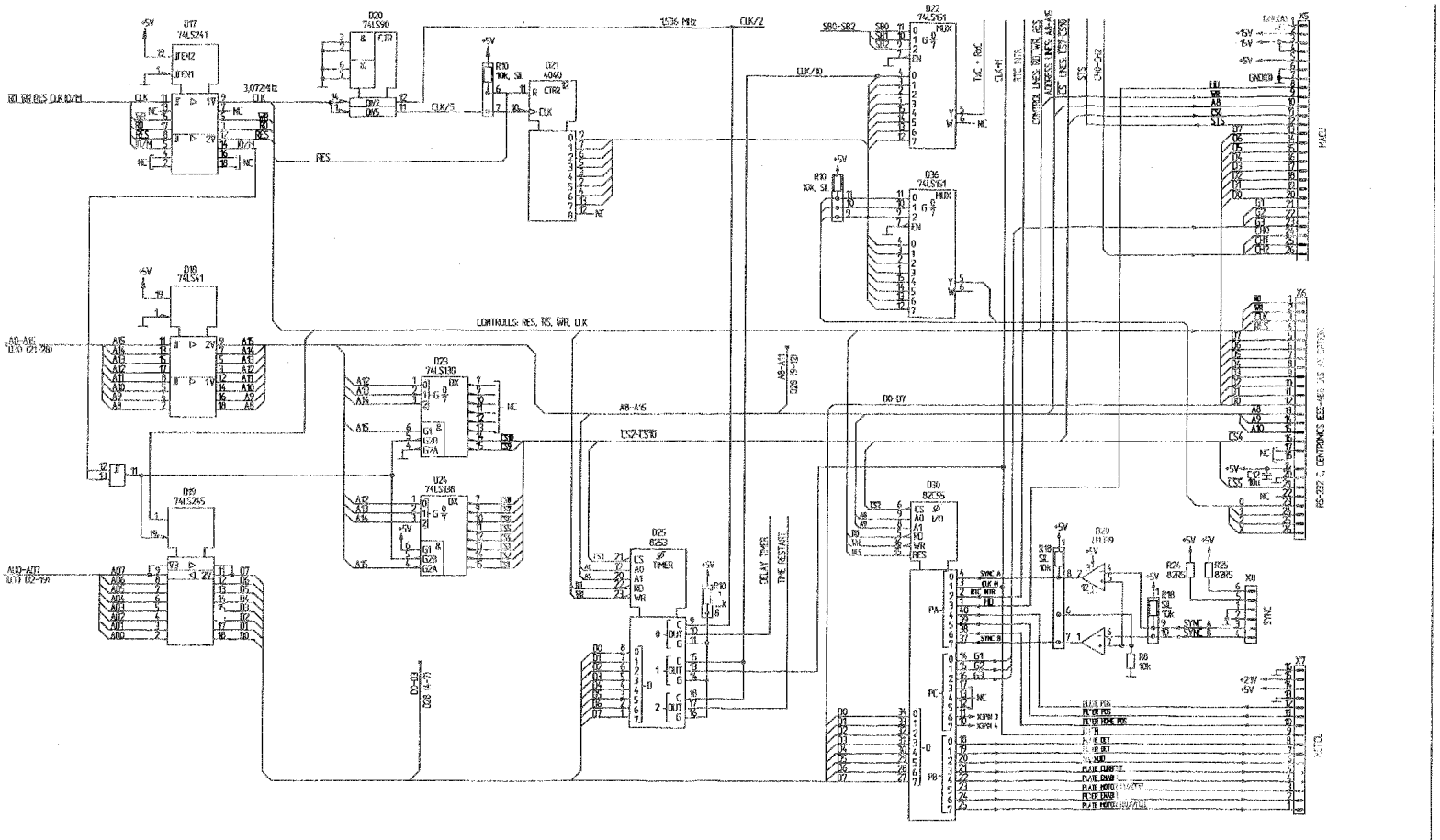

versio	viite	nro	muutos	piirt	suunn	tark	pvm	hyv
				PM	JPo	JPo	21.1.97	
piirman laatu			aine					
mitta-kaava Z			pinta-käsittely					
yleisto-leranssi			cad musc4si2	piir nro 352-06S-01				sivu 2/3
Labsys...ms			nimi MUSCU-04 Schematic Diagr.	koodi 200 4420				

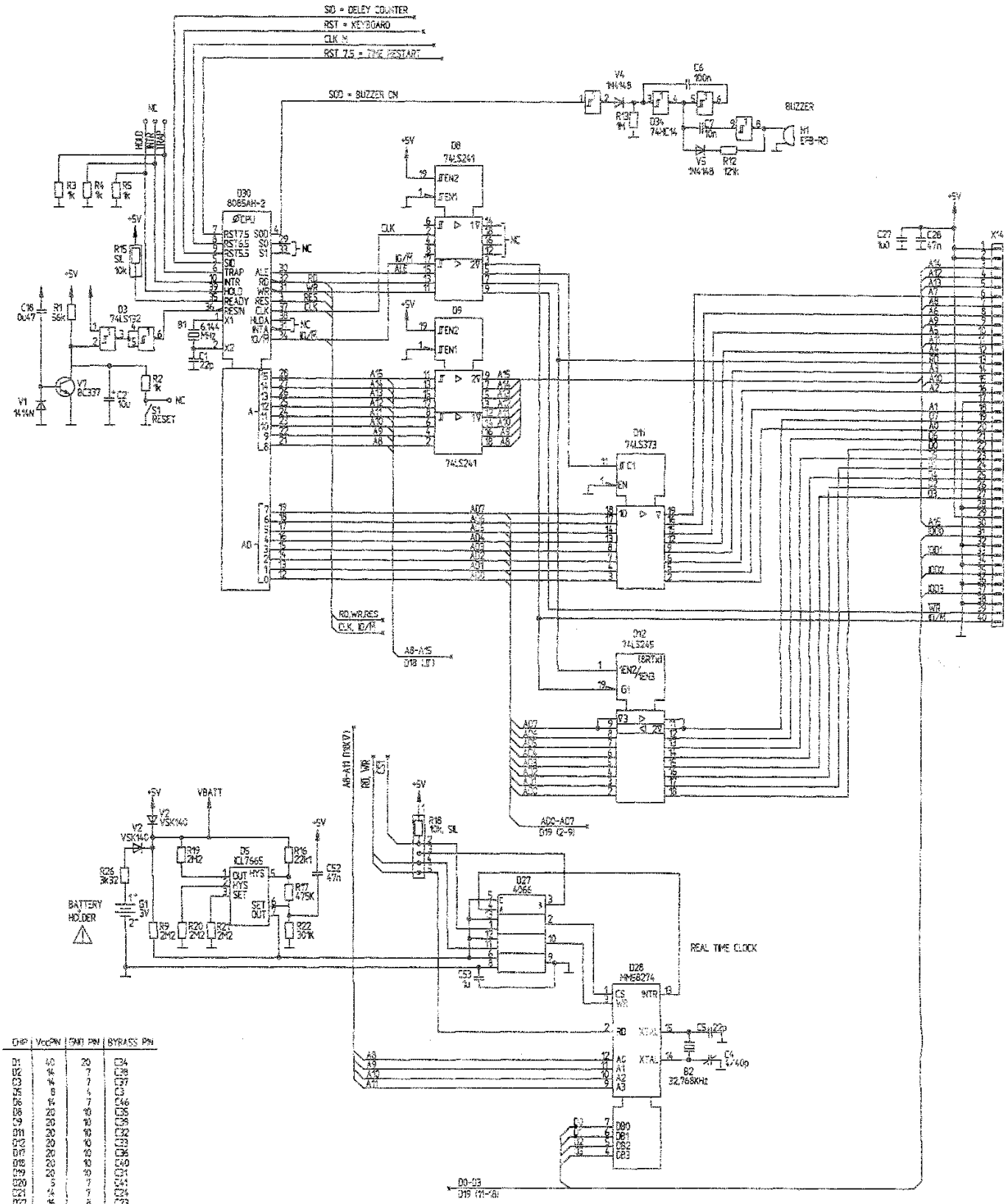

CHIP	VccPIN	GND PIN	BYPASS PIN
D1	40	20	C34
D2	14	7	C28
D3	14	7	C27
D5	8	4	C3
D6	14	7	C46
D8	20	10	C35
D9	20	10	C36
D11	20	10	C32
D12	20	10	C33
D17	20	10	C36
D18	20	10	C40
D19	20	10	C21
D20	5	3	C41
D21	4	7	C24
D22	16	8	C23
D23	16	8	C49
D24	16	8	C47
D25	24	12	C25
D27	14	7	—
D28	16	8	C19
D29	3	12	C48
D30	26	7	C56
D31	26	4	C38
D32	16	15	C31
D33	26	7	C22
D34	14	7	C20
D35	40	20	C29
D36	16	8	C51

versio	viite	nro	muutos	piir'	suunn	tark	pvm	hyv
		pinnan laatu	aine	PM	JP	JP	21.1.97	c4
mitta-kaava Z			pinta-käsittely	piir no 352-06S-01				sivu 1/3
yleisto-leranssi			cad MUSC4si1					
absystems			nimi MUSCU-04 Schematic Diagr	koodi 200-4420				

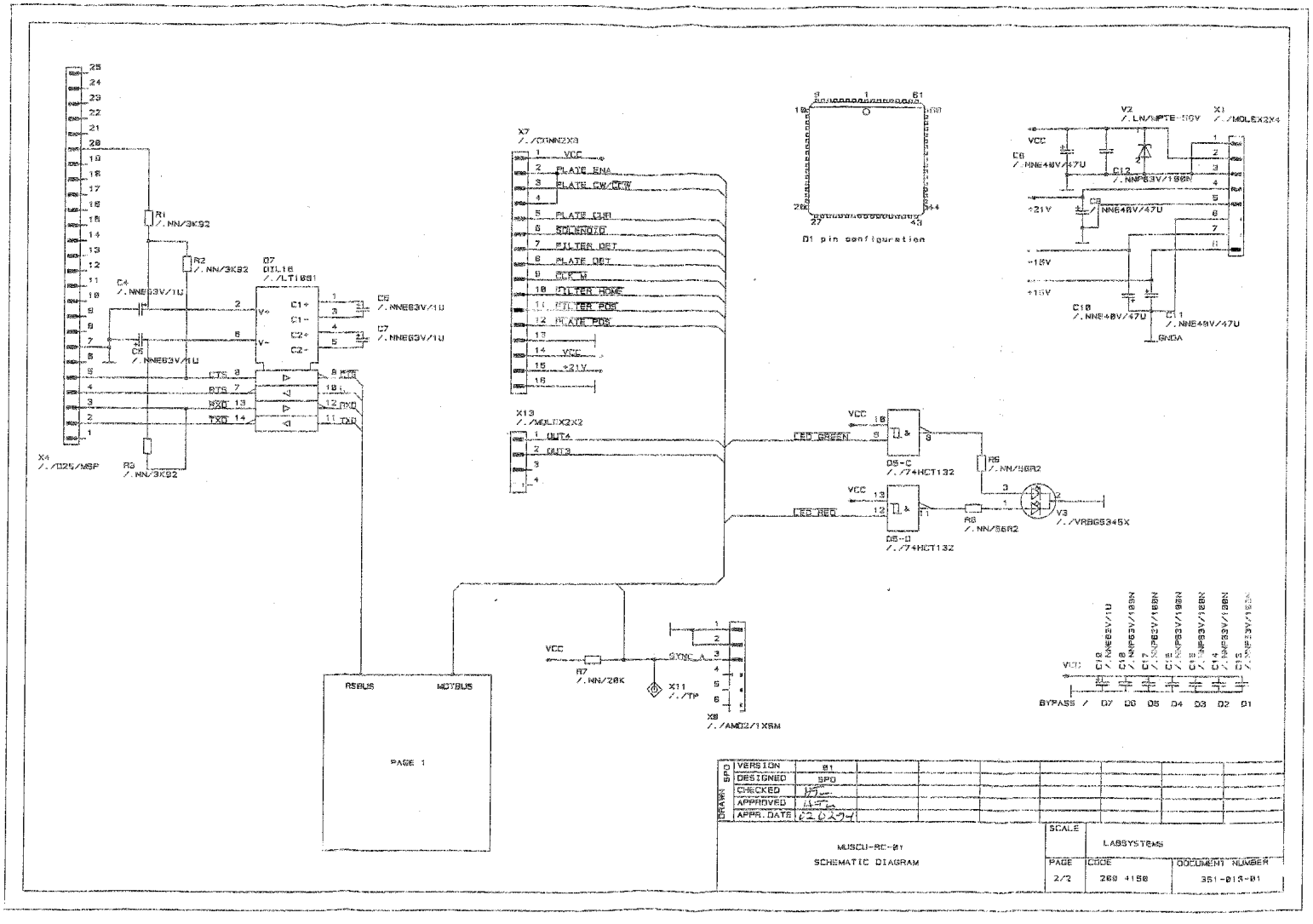

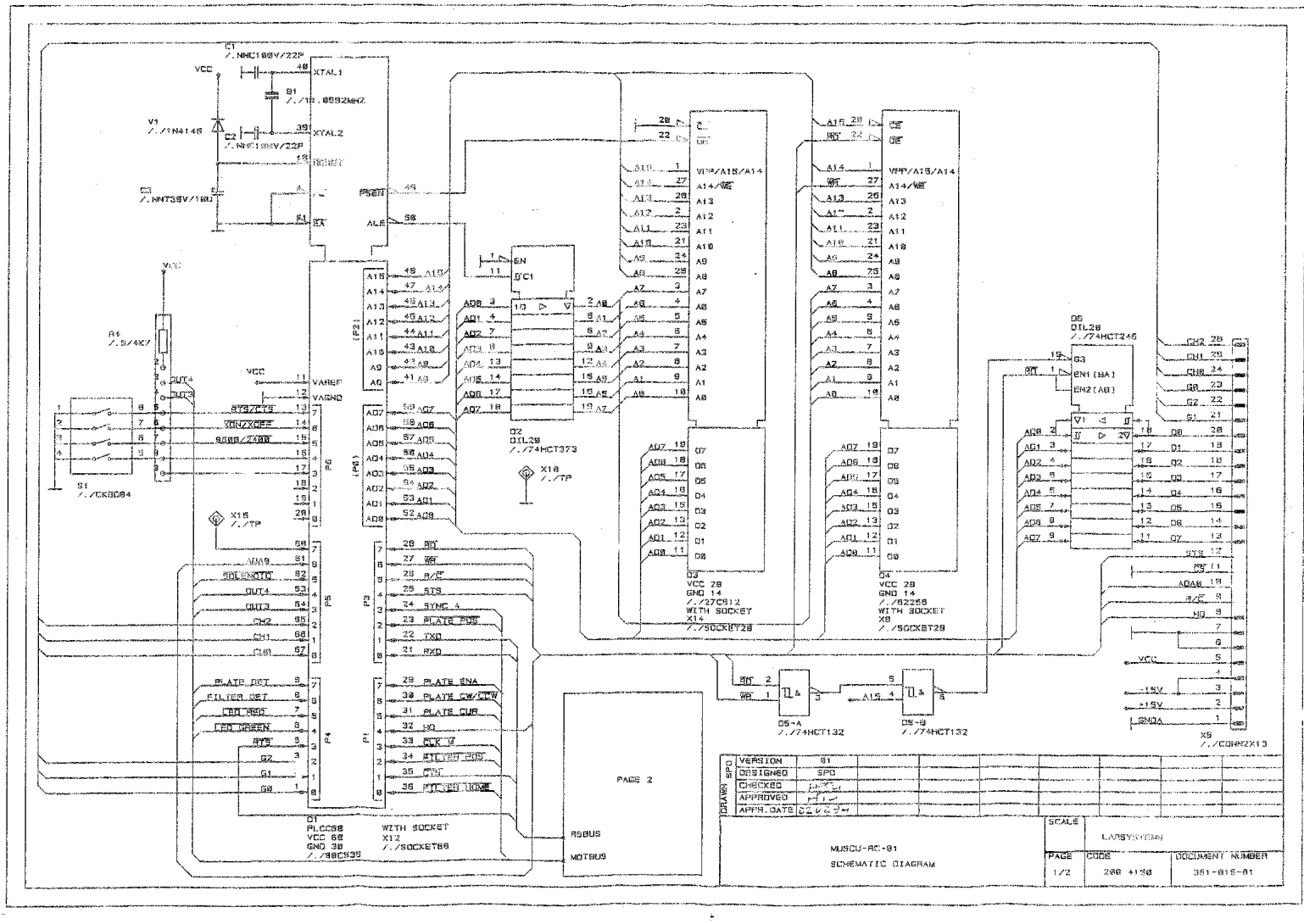

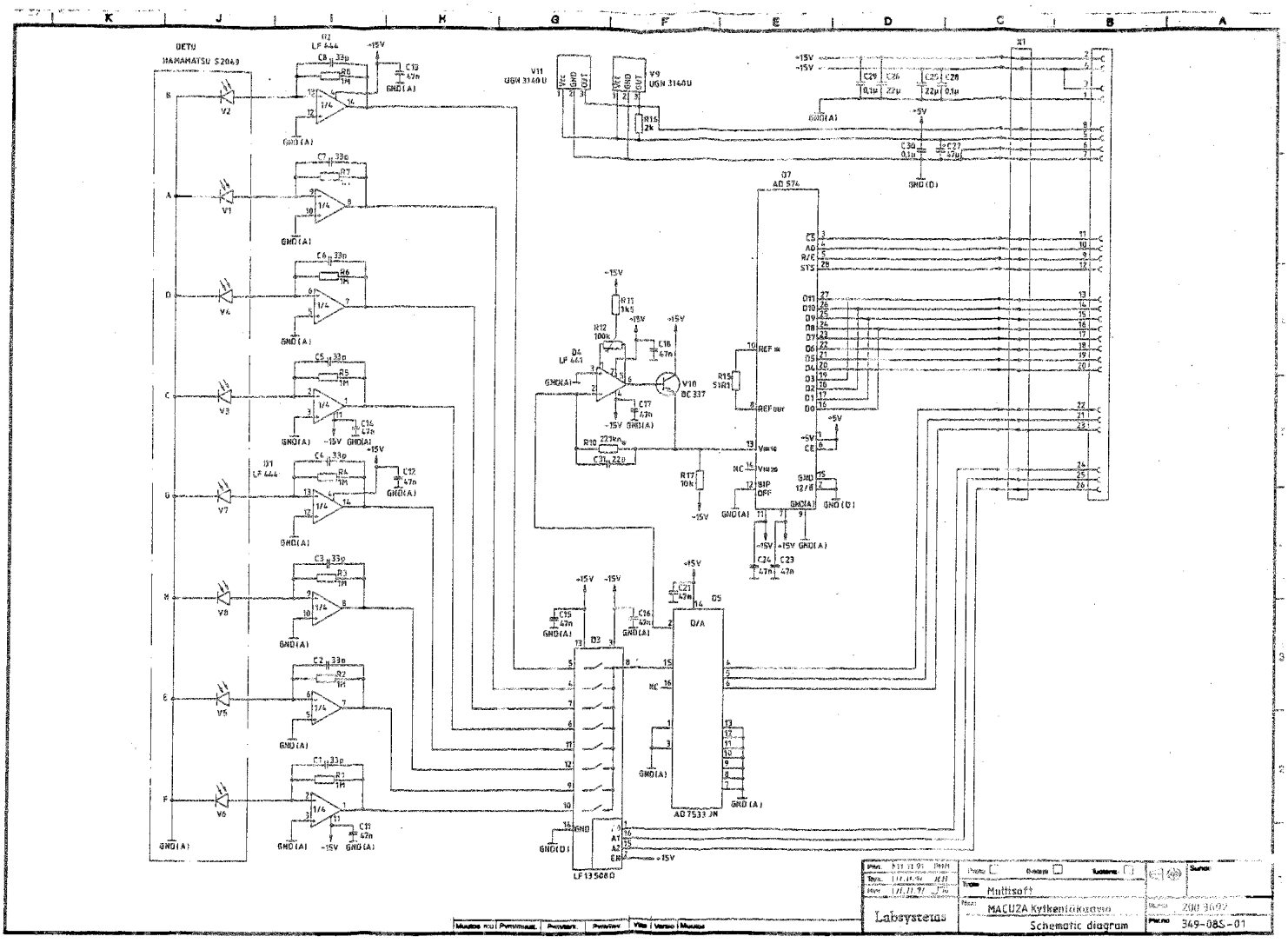

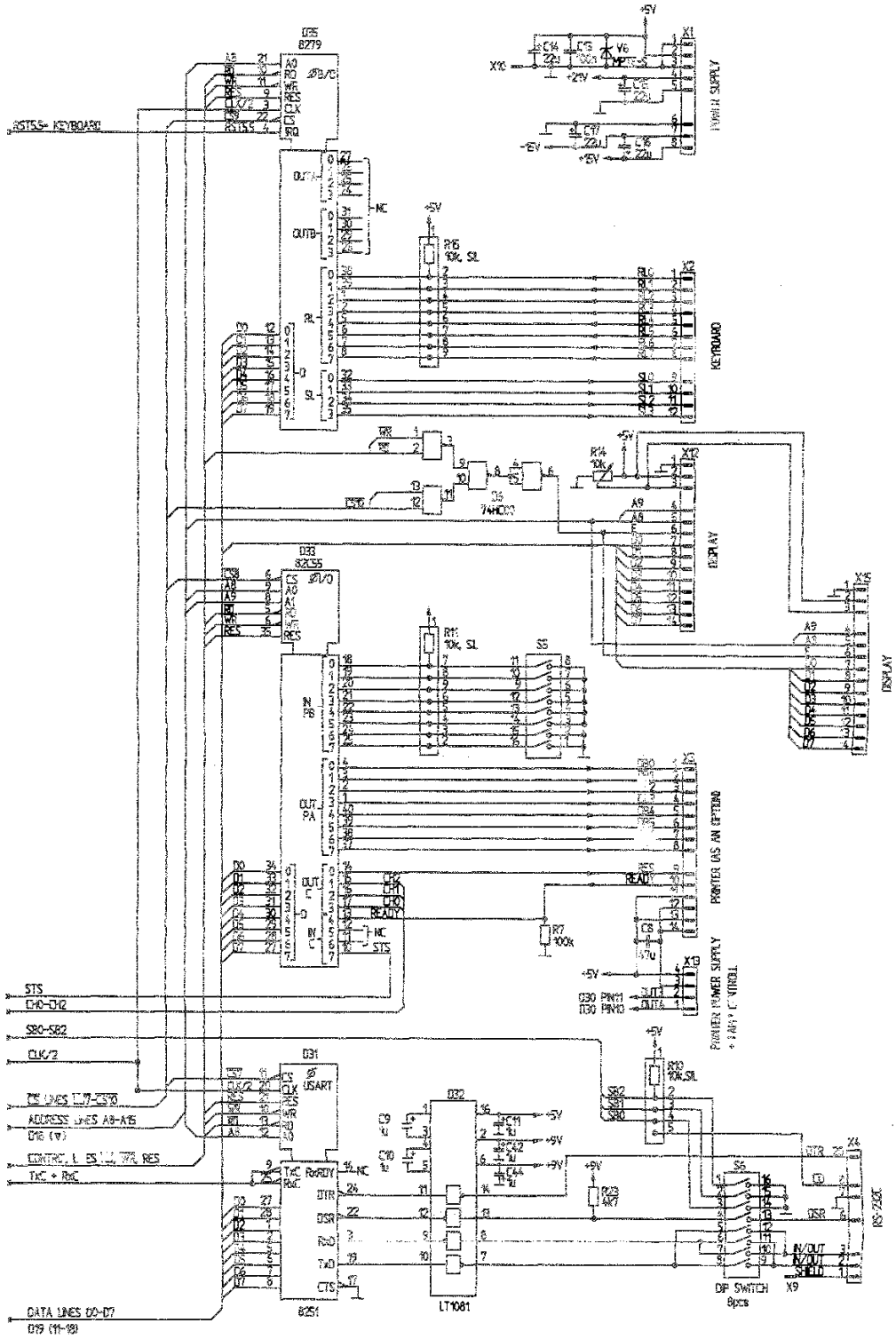

versio	viite	nro	muutos	piirt	suunn	tark	pvm	hyv
		pinnan laatu	aine	PM	JPS	JPS	21.1.97	OKL
mitta-kaava Z			mitta-kasittely	piir no 352-06S-01				sivu 3/3
yleisto-tarkassi			cad musc4si3					
Labsystems			nimi MUSCU-04 Schematic Diagr.	koko 200 4420				

Section 7

Software

Software

Contents

MULTISKAN RC INITIALIZATION SEQUENCE

1. Switch led orange.
   LED RED and LED GREEN signals low.

2. Detect real time clock option.
   Read SmartWatch. If valid result, RTC option installed. Else try to set time 01.01.1994 00:00:00. Read again and if still invalid, RTC option not installed.

3. Initialize serial port.
   Initialize transmit and receive buffers.
   Initialize baud timer for baud selected by DIL switch.
   Disable transmit if RTS/CTS handshake and CTS is off.
   Enable transmit, receive and CTS interrupts.

4. Reset steppers: filter stepper off, plate stepper low current.
   CLK M signal low.
   PLATE ENA signal high.
   PLATE CUR signal low.
   Enable interrupt on falling edge of FILTER HOME.

5. Calculate step delay tables for both steppers.
   Tables are calculated to RAM.

6. Find plate home position.
   If plate home sensor low, drive plate first 40 steps in.
   Drive plate out 20 steps past home sensor low transition.

7. Wait chopper speed to stabilize.
   Start a timer for 1s timeout. If the timer expires, the chopper is not rotating.
   Measure chopper cycle length from SYNC A interval.
   Wait 0.5s
   Measure chopper cycle length again.
   If measured cycle length difference less than 5.5us, the speed has stabilized.
   Else repeat the sequence.

8. Adjust channel gains for each filter, record non installed filters.
   Start adjust from filter 1 and continue to filter 8:
   Adjust channel gains for each four lamp intensity, starting from low intensity.
   With each intensity, start decreasing channel gains from maximum until all channel readings are below MAX_CH_READING (9.9V).
   Select for current filter the lamp intensity and gains combination which gave the highest readings.
   If the gains could not be adjusted (too much or not enough light), mark current filter not installed.

   Select first installed filter.

9. Detect agglutination option.
   Switch the agglutination slit on.
   Adjust agglutination gains for the selected filter.
   Switch the agglutination slit off.
   If the change in light intensity when the slit was switched off is within MAX_SLIT_ATTEN and MIN_SLIT_ATTEN (4V to 9.1V), the agglutination option is installed, else not.

9.1 If present, adjust gains for agglutination, record filters not suitable for agglutination.
Adjust agglutination gains for each installed filter:
Starting from high lamp intensity, adjust channel gains from high to low gain untill a lamp intensity/channel gain combination where all channel levels are below MAX_SLIT_READING (9V) is found.
If the gains could not be adjusted to get channel readings between MIN_SLIT_READING and MAX_SLIT_READING (1V to 9V), the filter is not suitable for agglutination.

10. Select first installed filter.

11. Switch led green unless error during initialization.

INITIALIZATION MULTISKAN MS

Initializing MUSME-01s Latch EPROM-switch (IC D5 74LS374)

Reseting and Initializing MUSCUs external serial channel (USART D31 8251)

Initializing MUSCUs IC D30 8255 for the pcb MOTCU

Initializing MUSCUs IC D33 8255 for the internal printer

Initializing the possible optio 8255 in MUSCUs pin X6

Initializing MUSCUs IC D25 8253 timer

Initializing MUSCUs IC D35 8279 display/keyboard

Reseting MUSCUs buzzer

SLIT test: Partial test (only off/not installed situation checked)
for PRIMARY, CUT OFF, CUBIC SPLINE, TEST MODULE
Total test (slit checked for on/off)
for AGGLUTINATION

Reading the name of the external card (if there is)

Controlling MOTCU motor control lines

Lamp voltage down

Version number is displayed

Driving the plate to the home position or moving there and back

Checking the filterwheel

Lamp voltage down

Autocalibrating (filter)

Lamp voltage down

Reseting the printer

READY state

Section 8

Testing and Adjusting

Testing and Adjusting

Contents

SUBJECT *PAGE*

Testing and Adjusting

Lamp Voltage

GENERAL

With the following instructions it is possible to measure the lamp voltage on Multiskan RC or MS. If voltage is not correct, adjust voltage to the right level using trimmer R39 in the power supply.

REQUIRED EQUIPMENT

- Digital volt meter
- Small flat screwdriver
- Phillips screwdriver
- 4.0 mm allen key

INSTRUCTIONS

1. Switch the instrument ON.
2. Measure voltage on the lamp connector. It should be 6.7...6.9 V
3. Measure voltage with 340 nm filter. Press "PARAM" key.
4. Select 5 and press "ENTER" key. Instrument displays "PRINTER ON/OFF".
5. Select 1 and press "ENTER" key.
6. Press "MEAS PARAM" and select filter 1. Press "ENTER" key.
7. Press "START" key. Measure voltage when the carriage is moving in. Voltage should be 7.5...8.1 V
8. If voltage is not correct, switch the instrument OFF and disconnect from the mains.
9. Using a phillips screwdriver, loosen and remove the screws which hold the measuring assembly cover. Remove the measuring assembly cover.
10. Using a 4.0 mm allen key, loosen and remove the screws which hold the track. Move the track so much that the part of the power supply which was under the track appears. See Figure 8-1.

11. Switch the instrument ON.

12. Measure and adjust voltage on the lamp connector to 6.7...6.9 V using trimmer R39. See Figure 8-2.

13. Switch the instrument OFF and disconnect from the mains. Reinstall the track and the measuring assembly cover.

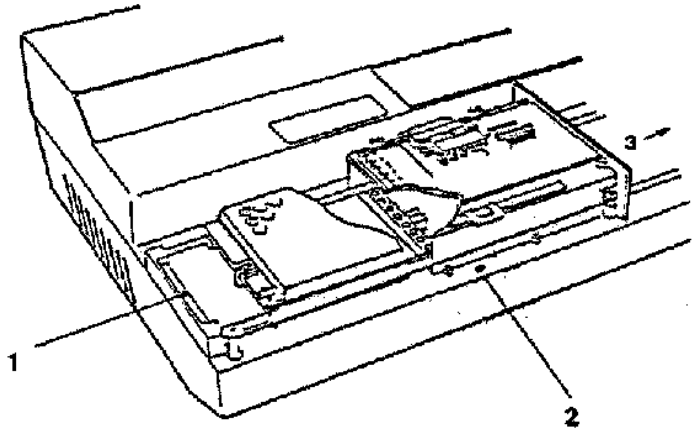

Figure 8-1
Track screws

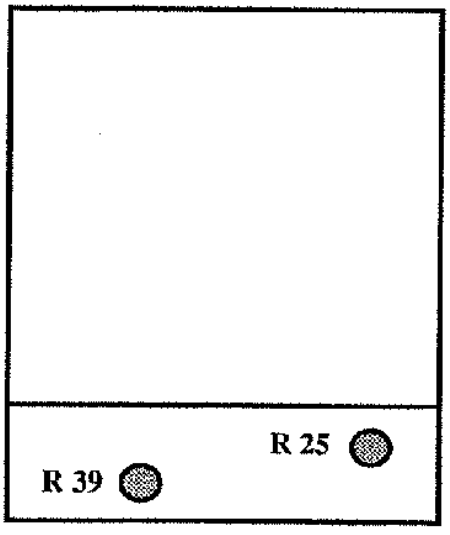

Figure 8-2
Power supply

Testing and Adjusting

Computer Control Commands in All Modules

Modules 1 and 2 are recommended to use with an external computer, because all commands exist in these modules. However other modules contain some commands:

Com.	Meaning	PRIM	AGG	CUT	CUB	TEST
R	Start remote control	Yes	Yes	Yes	Yes	Yes
Fn	Filter n=1..8	Yes	Yes	Yes	Yes	Yes
FMnn	Multifilter nn 12 pcs	Yes				Yes
En	Measurement mode n=0,1	Yes		Yes		Yes
C/Cn	Module change n= ,1..4	Yes	Yes	Yes	Yes	Yes
A	Air blank	Yes		Yes		Yes
B	Column blank	Yes		Yes		Yes
P/Pn	Plate measure n= ,1..99	Yes		Yes		Yes
PM	Multifilter measure	Yes				Yes
Mn	Column measure n=1..12	Yes				Yes
Sj	Set column j=1..12	Yes		Yes		Yes
O	Initialize column=0	Yes		Yes		Yes
I	Initialize column=1	Yes		Yes		Yes
Xn	Mixing speed n=1..3	Yes		Yes	Yes	Yes
Zn	Mixing n=00..60	Yes		Yes	Yes	Yes
T	Time	Yes	Yes	Yes	Yes	Yes
N	Serial number	Yes	Yes	Yes	Yes	Yes
V	Software version	Yes	Yes	Yes	Yes	Yes
Q	Quit remote control	Yes	Yes	Yes	Yes	Yes
WMp	Agglut. measurement		Yes			
Hn	Pinhole plate on/off n=0,1					Yes
Gn	Move to column n=1..12					Yes
CLR	Reset EEPROM					Yes

Testing and Adjusting

for

Multiskan RC 351

Testing and Adjusting

Problems in setting up the instrument

The instrument does not start up.

Reason: There is no power to the instrument.

Action: Check that the power cable is properly plugged to both the instrument and the wall outlet. Check that the fuses are not blown.

The instrument does not respond to commands from computer.

Reason: Incorrect setup of serial interface.

Action: Check that the instrument is properly connected to the computer with the supplied cable. Check that the baudrate of the computer matches that of the instrument (factory setting 9600). Check that the character format on the computer serial port is set to 8 databits, no parity and 1 stop bit.

Consult your computer dealer. If your computer uses / requires some other signal than RTS/CTS for handshaking, you may need a special cable.

The instrument does not recognize the agglutination option.

Reason: During startup the instrument checks the presence of agglutination option by trying to operate the aperture plate. If the plate cannot be detected, the instrument assumes that the option is not installed.

Action: Check that the focusing lenses and the upper optics are clean. See also error APERTURE PLATE OPERATION FAILED.

Testing and Adjusting

Adjustments with ADJ Commands

GENERAL

Switch Multiskan RC ON. Wait until the instrument is ready to receive commands.

Enter commands R and ADJ.

Open the instrument cover and turn all DIL switches to OFF.

OPERATING INSTRUCTIONS

1. CHOPPER SPEED

A) Turn DIL switch 1 ON.

B) Adjust trimmer R3 on pcb CHOPT-01 until the LED in the pcb MUSCU-RC is green.

C) Turn DIL switch 1 OFF.

Limits:	Red	<1200 rpm or >1500 rpm
	Orange	1200..1429 rpm or 1481..1500 rpm
	Green	1430..1480 rpm (chopper time 5.24..5.07 ms)

2. CHOPPER TIMING

A) Turn DIL switch 2 ON.

B) Loosen pcb CHOPT-01 screws so that you can move the pcb.

C) Move the pcb up/down direction until the LED in the pcb MUSCU-RC is green.

D) Tighten the screws.

E) Turn DIL switch 2 OFF.

Limits: The timing is right when the middle place of the chopper hole is in the center of light way after time 0.634 x T (chopper time) from the chopper sensor dropping margin.

	Red	Variation >108 µs
	Orange	Variation 55..108 µs
	Green	Variation <55 µs

3. A/D OFFSET

A) Open the green box below which the A/D converter locates.

B) Work in the dark place or open the cover only so much you can adjust potentiometer R12.

C) Turn DIL switch 3 ON.

D) Adjust potentiometer R12 until the LED in the pcb MUSCU-RC is green.

E) Switch the instrument off. Return all DIL switches to their original positions and close covers.

Limits:	Red	Offset <0.80 % or >1.20 % from A/D converters total value.
	Orange	Offset 0.80..0.95 % or 1.05..1.20 % from A/D converters total value.
	Green	Offset 0.96..1.04 % from A/D converters total value.

Limits are corresponding to voltages 80 mV, 95 mV, 105 mV and 120 mV.

Testing and Adjusting

Error Limits

ER 5 CHOPPER SPEED IS TOO HIGH
Chopper speed is over 1500 rpm.

ER7 FILTER TIMEOUT
Filters home position was not found in 2 seconds.

ER8 FILTER OUT OF POSITION TOLERANCE
Filters home position sensor differs over ±4 steps from the counted home position.

ER9 NOT ENOUGH LIGHT FOR ADEQUATE SIGNAL LEVEL
Light less than 50 % from the maximum A/D value.

ER10 TOO MUCH LIGHT, SIGNAL SATURATED
Slit on: Light over 98 % from the maximum A/D value.
Slit off: Light over 90 % from the maximum A/D value.

ER11 APERTURE PLATE OPERATION FAILED
The change of the light intensity over 91 % or less than 40 % from the maximum A/D value.

ER12 FILTER NOT USABLE FOR AGGLUTINATION
Light less than 10 % from the maximum A/D value.

ER13 LAMP FAIL
Slit on: Light less than 46 % from the maximum A/D value.
Slit off: Light less than 8 % from the maximum A/D value.

ER14 CHOPPER SPEED IS TOO LOW
Chopper speed is less than 1200 rpm.

ER15 PLATE STEPPER TIMEOUT
When the plate has been driven out it did not come to the place sensor in 7 seconds.

ER16 PLATE POSITION ERROR
When the plate has been driven out it did not come to the home position sensor.

Interpretation of STATUS response.

Filter:	Number of currently selected filter, 1..8.
Chopper speed:	Chopper rotation speed in revs per minute, should be 1430..1480
Lamp intensity:	Lamp intensity for currently selected filter, slit off / slit on. The lowest intensity is 0, the highest 3.
Gains:	Measure channel gains for currently selected filter, slit off / slit on. The channels are in order from 1 to 8. The lowest gain is 0, the highest 7.
Bottom values:	Dark levels of channels 1..8. The values are sum of two AD readings
Blank values:	Light levels of channels 1..8. The values are sum of two AD readings.

Bottom values and Blank values can be converted to input voltage of the AD converter by dividing them by 819. The exact formula is: value / 8190 * Vref.

Because the bottom levels and blank levels depend on selected filter and lamp intensity no absolute limits can be given. The following suggestive limits may be used:

The bottom level at the AD converter should be 90 to 110mV with filter 2 (= 405nm). This corresponds to bottom value 73 to 90. This applies to the channel with the lowest reading. Other channels should be less than 150mV / reading 123.

Tha blank levels at the AD converter should be 5.0 to 9.8 V (**3.3** to 9.8 V with software **version 1.5-0 onwards**). This corresponds to readings 4095 to 8026 (**2703** to 8026 with software **version 1.5-0 onwards**). The less deviation between the channels the better.

Testing and Adjusting

Error Messages

Error Response:

ER3	COMMAND ERROR
ER4	INVALID PROGRAM MODULE
ER5	CHOPPER SPEED IS TOO HIGH
ER6	FILTER NOT INSTALLED IN FILTER WHEEL
ER7	FILTER TIMEOUT
ER8	FILTER OUT OF POSITION TOLERANCE
ER9	NOT ENOUGH LIGHT FOR ADEQUATE SIGNAL LEVEL
ER10	TOO MUCH LIGHT, SIGNAL SATURATED
ER11	APERTURE PLATE OPERATION FAILED
ER12	FILTER NOT USABLE FOR AGGLUTINATION
ER13	LAMP FAIL
ER14	CHOPPER SPEED IS TOO LOW
ER15	PLATE STEPPER TIMEOUT
ER16	PLATE POSITION ERROR

Errors explained in alphabetic order:

APERTURE PLATE OPERATION FAILED

Reason: Before agglutination measurement the aperture plate is moved over the focusing lenses by actuating a solenoid. After the measurement the solenoid is relaxed. In both cases the change of signal levels must be within predefined limits. If not, this error is reported.

Action: Check that the focusing lenses and the upper optics are clean.

There should be a clearly audible click from the aperture mechanism before and after the measurement. If not, the instrument needs servicing.

Service: If there isn't any kind of click, the problem is electrical. Check connections from the solenoid to the MOTCU board and the flat cable connection from MOTCU to the controller board MUSCU-RC. Also check the +21V voltage from the power supply. The solenoid actuating signal originates from pin 62 of IC D1 on MUSCU-RC board. It is active low and goes to pin 17 of buffer D1 on MOTCU board. From pin 16 of the buffer the signal continues through resistor R4 to pin 7 of switchmode constant current driver N3. The solenoid is connected to the output of N3, pins 1 and 15. A low level on pin 7 enables the output, a high level disables it. The operation of N3 can be tested by connecting input pin 7 to pin 4 which should enable the output or to pin 6 which should disable the output.

If there is a click from the mechanism, a mechanical problem is possible. Remove the measuring assembly cover. Push the aperture plate manually over the focusing lenses. It should move there smoothly with little force and stop so that the pinholes are above the center of the lenses. Slight error in the end position may be due to incorrect aperture plate assembly fixing position and can be corrected by loosening the two retaining screws and moving the assembly to required direction.

If the manual test is okay, switch on the instrument and observe the aperture plate. During the powerup sequence the plate should move to the same position as manually.

If the aperture plate does not move to the correct position, the whole track plate has to be removed for aperture plate assembly inspection.

CHOPPER SPEED IS TOO HIGH

Reason: During startup and before each measurement the instrument checks that the chopper speed is within range 1200 to 1500 rpm. If the speed is higher, this error is reported.

Action: Contact service.

Service: Open the instrument cover and power up the instrument. Connect an oscilloscope to test points X10 (ground) and X11 (signal) on the MUSCU-RC board. Chopper sensor signal should be visible on the scope. Locate the adjusting potentiometer R3 on the CHOPT board. Turning the potentiometer clockwise with a screwdriver should reduce chopper speed and counterclockwise increase. If nothing happens there is a fault in the electronics on the CHOPT board.

Measure voltage at pin 6 of N1. It should be 6.8..7.5 V. If not, the faulty component likely is N1. With the oscilloscope, observe pin 3 of N3. A pulse output with same frequency as test point X11 should be present. If not, the faulty component likely is N3. With a jumper wire, connect pins 4 and 6 of N1 together. If the chopper does slow down, faulty component is V1 or possibly N1.

When the problem is fixed, adjust cycle time at test point X11 to as close to 5.1 ms as possible, rather more than less.

Chopper speed can also be adjusted without an oscilloscope using STATUS command to observe chopper speed. Adjust to 1440...1470 rpm.

CHOPPER SPEED IS TOO LOW

Reason: During startup and before each measurement the instrument checks that the chopper speed is within range 1200 to 1500 rpm. If the speed is slower, this error is reported.

Action: Contact service.

Service: Open the instrument cover and power up the instrument. First check that there is more than 20 V voltage between pins 7 and 12 of N1 on the CHOPT board. If the chopper does not rotate at all, briefly connect with a jumper wire pin 11 of N1 to the terminal with red wire on the chopper motor. If the chopper does not start, the motor is faulty. Connect pins 5 and 6 of N1 together. The chopper should speed up. If not, V1 or possibly N1 is faulty. Connect an oscilloscope to test points X10 (ground) and X11 (signal) on the MUSCU-RC board. Chopper sensor signal should be visible on the scope. If not, the sensor is faulty. Locate the adjusting

potentiometer R3 on the CHOPT board. Turning the potentiometer clockwise with a screwdriver should reduce chopper speed and counterclockwise increase. If nothing happens, measure voltage at pin 6 of N1. It should be 6.8..7.5 V. If not, the faulty component likely is N1. With the oscilloscope, observe pin 3 of N3. A pulse output with same frequency as test point X11 should be present. If not, the faulty component likely is N3. If the cycle time measured at test point X11 is 5.1 to 6.1 ms and the instrument still reports low chopper speed, D1 on MUSCU-RC is faulty.

When the problem is fixed, adjust cycle time at test point X11 to as close to 5.1 ms as possible, rather more than less.

Chopper speed can also be adjusted without an oscilloscope using STATUS command to observe chopper speed. Adjust to 1440...1470 rpm.

COMMAND ERROR

Reason: The instrument received an unknown command or a command with invalid parameters.

Action: Check valid commands and parameters from chapter 'Remote control commands for Multiskan RC'.

FILTER NOT INSTALLED IN FILTER WHEEL

Reason: The filter number requested is not installed on the *filter* wheel.

Action: Use only *filter* numbers actually installed. At least one filter must be installed!

FILTER NOT USABLE FOR AGGLUTINATION

Reason: The signal level with currently selected filter is not adequate for measuring with aperture plate in agglutination measure position. This usually happens with filters of short wavelength.

Action: Use longer wavelength filters for agglutination measurement. If one of the longer wavelength filters gives this error, then the filter in question likely is bad. If several filters give this error, first check that the focusing lenses and upper optics are clean. If cleaning does not help, the optical system should be checked by a service person.

FILTER OUT OF POSITION TOLERANCE

Reason: The calculated filter position and filter home position signalled by filter sensors are too far apart.

Action: Open the instrument cover and power up the instrument. Watch filter movement during startup. If the filter stepper looses steps it can be noticed and also heard. In this case look for something that mechanically disturbs free movement of the filter wheel.

Service: If no mechanical reason for irregular filter movement is found, first check that +21V voltage from the power supply is ok.

Then continue by checking pins 29 and 33 of D1 on the MUSCU-RC board. Power up the instrument. Pin 29 should be high when the filter is stopped and low when the filter is running. At pin 33 there should be short active high pulses whenever the filter or plate stepper is running. If the signals are not okay, disconnect connector X7 and power up again. If the signals still are not okay, D1 is faulty. Else either N1 or N4 on MOTCU board is faulty. To determine which one requires quessing or cutting traces to one of the chips.

If the signals at pins 29 and 33 of D1 were ok, the fault remains in one of N4, V6 to V10 and R19 on MOTCU board or the filter stepper itself.

If this error is reported though the filter wheel seems to rotate smoothly, there may be a problem in sensing the filter home position. Filter home position sensors are enabled only while the filter stepper is running. The enable signal originates from pin 8 of D1 on the MUSCU-RC board and is active high. Home position is detected from pins 34 and 36 of D1 being simultaneously low. When the filter is stopped, the enable signal should be low and both sense signals high. If not, disconnect connector X7 on MUSCU-RC. If the signals still are in incorrect states, D1 on MUSCU-RC is faulty. Else the problem is on MOTCU board or the sensors themselves. Connect X7 and power up the instrument. Observe the enable signal during startup sequence. It should be high when the filter is rotating and low when the filter is stopped. If not, buffer D1 on MOTCU board is faulty.

Disconnect connector X4 on MOTCU board. Both sense signals on pins 34 and 36 of D1 on MUSCU-RC board should be steady high. If not, buffer D1 on MOTCU board is faulty.

Connect pins 7 and 8 of X4 together, power up the instrument and observe signal at pin 7 or 8. The signal should be low when the filter is rotating and high when not. If this is not so, either transistor V2 or buffer D1 is faulty. Power up again and observe signal at pin 9 of D1. It should be high when the filter is rotating and low when the filter is stopped. If not, D1 is faulty, else it was V2.

If the fault has not yet been found, there still is a slight chance that it is buffer D1 but more likely it is one of the sensors.

FILTER TIMEOUT

Reason: Filter home position was not detected within allowed time.

Action: Check that the filter wheel is properly installed in its slot.

Service: There are two cases. Either the filter is not rotating properly or the home sensing does not work.

In the first case, try to measure the plate. If there is a problem with the plate stepper as well, the problem is in the step clock or enable signals which are common to both steppers. See what is said of checking these signals in FILTER OUT OF POSITION TOLERANCE.

Else see fault finding of home sensing electronics in FILTER OUT OF POSITION TOLERANCE.

INVALID PROGRAM MODULE

Reason: Only program module numbers 1 and 2 are allowed with C command.

Action: Use module number 1 or 2. It is not necessary to use C command at all with Multiskan RC.

LAMP FAIL

Reason: Signal level during air blank is below minimum required value.

Action: Replace lamp. If the lamp is ok but this error is reported with one filter only, the filter must be bad.

NOT ENOUGH LIGHT FOR ADEQUATE SIGNAL LEVEL

Reason: Signal level during gain adjust remained below minimum required value even with highest possible lamp intensity and measure channel gain.

Action: Check that the lamp did not fail during power up. One of the filters may be bad. To determine which one, power up the instrument and count how many times the filter is rotated before the red error led lights up. The count is the filter number.

PLATE POSITION ERROR

Reason: After measurement the plate is driven out to home position from the measuring chamber. If the plate home sensor is not activated, this error is reported.

Action: Check that the track rails are clean and not bent. Check that the drive belt is undamaged. If there is a squeak from the rails when the plate moves, try cleaning the rails with a piece of tissue dampened with silicone lubricating spray. If there is noise from the right hand drive belt pulley, put a very small drop of lubricating oil to the pulley shaft.

Service: Try to measure the plate. You can hear from the sound of the plate stepper if it looses position.

If this happens, check that the upper and lower drive belts are not too tight. The belts should be just tight enough to eliminate slack in the plate drive.

Three signals from D1 of MUSCU-RC control the plate stepper operation. These are stepping direction control, pin 30, stepper enable, pin 29 and step clock, pin 33. The direction control is high when the plate is driven towards the measuring chamber and low when it is driven out. The stepper enable signal is high except when the filter stepper is running. The step clock is a short active high pulse, one for each step. If these signals don't seem to operate properly, disconnect connector X7 on MUSCU-RC and check again. If still not okay, D1 is faulty, else the fault is on MOTCU board. The stepper enable and step clock signals are common for both plate and filter stepper. If one of these is not okay, the faulty component can be either N1 or N4. If stepping direction signal is bad, N1 is faulty.

The plate stepper drive electronics on MOTCU board consists of stepper controller N1 and dual bridge driver N2. N1 is used in half step mode, pin 10 tied high. The step phase outputs are from pins 4, 6, 7 and 9. The outputs are pulse width modulated to control the motor current. The PWM oscillator output can be checked from pin 1 of N1. The inhibit outputs for bridge driver, pins 5 and 8, should be always high. When the stepper is running, the phase outputs should show pulses, the length of which is controlled by the pulse width modulation. If not, N1 is faulty. Faulty N2 may also excessively load the outputs. If the outputs from N1 are okay, but there are not respective >20 V output pulses from pins 2, 3, 13 and 14 of N2, then N2 is faulty.

Finally, one of diode bridge V4, current sensing resistors R11 and R12 or the stepper motor itself may be faulty.

PLATE STEPPER TIMEOUT

Reason: If this error is reported after startup, the home position of the plate was not found within allowed time.

If the error is reported when trying to measure, the plate did not arrive to first column within allowed time.

Action: See PLATE POSITION ERROR

Service: If the plate does not seem to move properly, see also PLATE POSITION ERROR.

If the plate seems to move properly, the problem is in sensing the plate position.

With instrument power off, manually move the plate to the right hand end of the track. Switch on power and observe the plate. If the first movement is to the right against the end of the track, plate home position sensing does not work. With power on, manually move the plate away from the right end of the track while observing the signal at pin 32 of D1 on MUSCU-RC board. The signal should be low until the plate is about 1 cm from the right end. If not, D1 or one of the hall sensors is faulty.

If the instrument starts up without error but drives the plate against the left end of the track and gives this error when trying to measure, the plate position sensing does not work. The position is sensed by a led sensor located below the measuring circuit board. During actual measure the sensor is disabled so it won't interfere the results. The enable signal originates from pin 9 of D1 on

MUSCU-RC board and first goes to pin 14 of buffer D1 on MOTCU board. The signal is normally high with low periods when the instrument is doing measurement. When the instrument is ready, check the following points on MOTCU board: pin 14 of D1 high, pin 15 of D1 high, collector of V3 low.

If the sensor enable is ok, check the sensor output. The output from the sensor goes first to input pin 1 of buffer D1 on MOTCU board. From buffer output pin 6 it goes to pin 23 of D1 on MUSCU-RC board. The signal is low when the plate is out and should go high about 3 cm before the whole plate is inside the measuring chamber.

TOO MUCH LIGHT, SIGNAL SATURATED

Reason: During gain adjustment for agglutination measurement, the signal level was too high even with lowest lamp intensity and measure channel gain.

Action: Contact service.

Testing and Adjusting

for

Multiskan MS 352

Testing and Adjusting

FOR SERVICE PERSONNEL

CONTENTS:

REQUIRED EQUIPMENT:

- Multimeter
- Oscilloscope
- Detergent plate (0.1% TWEEN 190 µl/well)
- NDF-cassette
- Test connector
- Frequency counter
- Printer
- If you do not have the filters specified here, use those you have.

1. CHECKING THE SUPPLY VOLTAGES

Before switching the instrument ON check that the position of the voltage selector switch is correct. For measuring points, see Figure 8-3.

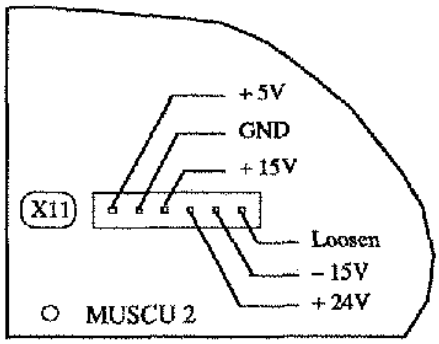

Unom (V)	Range (V)
+24	21.0 ... 28.0
+15	14.2 ... 15.8
+ 5	4.8 ... 5.2
-15	-14.2 ... -15.8

Figure 8-3
Measurement points on pcb MUSCU2

2. MEASURING THE LAMP VOLTAGE

Voltage is measured from the lamp base.

A) Stand by voltage : 6.7...6.9 V

B) Measurement voltage with 340 nm : 7.5...8.1 V

Press "PARAM"-key and select 5 (PRINTER ON/OFF), press "ENTER"-key.
Select 1 (OFF) and press "ENTER"-key. Press "MEAS PARAM"-key.
Select 1 and press "ENTER"-key twice. Press "START"-key.

Voltage is measured when the carriage is moving in.

See from this chapter item "LAMP VOLTAGE".

3. ADJUSTING THE DISPLAY INTENSITY

The display intensity is adjusted by trimmer R14 on pcb MUSCU2. See Figure 8-4.
The base battern has to be dimly seen. Lock the trimmer with locking lacquer.

4. SAVING THE FILTERS

Press "PARAM"-key. Select 6 FILTER WHEEL and press "ENTER"-key. When display asks NR OF FILTERS 1 input correct number of filters you have in the filterwheel and then the wavelengths of those filters. Place the filters in raising wavelength order into the filterwheel.

5. CHECKING THE SYNCHRONIZING

5.1 Rotation of the chopper wheel

Connect an oscilloscope to circuit D29 pin 2 on pcb MUSCU2 and measure signal's periodic time T 5,1...5,4 ms. Adjust with trimmer R3 on pcb CHOPT-01 if necessary and lock the trimmer with locking lacquer.

5.2 Checking the synchronizing

Continuous measurement:

A) Press "CALC MODE"-key. Select 1 ADJUSTMENT and press "ENTER"-key. Select 9 CONT.MEAS. and press "ENTER"-key twice. Select GAIN 0 and press "ENTER"-key.

B) When measuring the signal of A/D converter from pin 14 (circuit D7 on pcb MACU2), the measuring period has to be in the middle of the channel. See Figure 8-4. If the period is not in the middle of the channel, move pcb CHOPT-01 so that the period is in the middle of the channel.

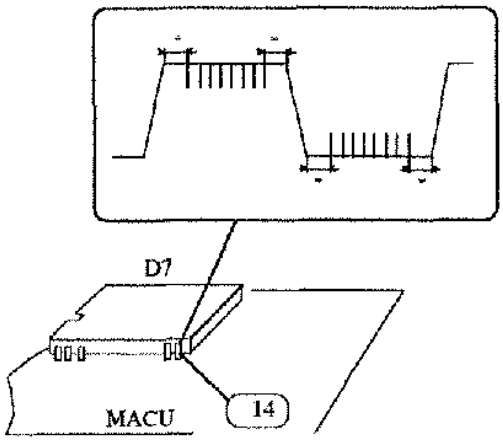

Figure 8-4
Measurement point of the synchronizing

6. ADJUSTING THE CLOCK FREQUENCY

A) Press "CALC MODE"-key. Select 1 ADJUSTMENT and press "ENTER"-key. Select 10 CLOCK FREQUENCY and press "ENTER"-key.

B) Measure the clock frequency (fck=32768 Hz) with a frequency counter from D28 pin 13 on pcb MUSCU2. Adjust with trimmer capacitor C4 if necessary. See Figure 8-5.

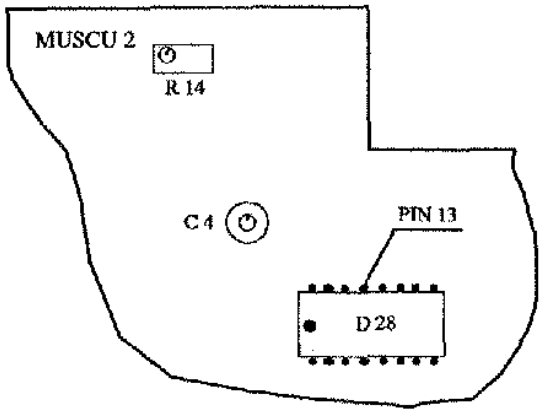

Figure 8-5

Measurement and adjustment points on pcb MUSCU2

C) Do not interrupt the program with "STOP"-key.

7. SETTING THE DATE AND TIME

A) Press "PARAM"-key and select 8 CLOCK SET.

B) Set the date and time using the number and → ← keys and "ENTER"-key.

8. STORING THE SERIAL NUMBER

Press "CALC MODE"-key. Select 2 TESTS and press "ENTER"-key. Select 4 REPROD.20M. and press "ENTER"-key twice.
Type 352xxxxxxx (see the numbers from the rear of the instrument). Press "STOP"-key twice.

9. FOCUSING THE LAMP

A) Check that the filter and track cover are at their places.

B) Press "CALC MODE"-key. Select 1 ADJUSTMENT and press "ENTER"-key. Select 3 LIGHT ALL and press "ENTER"-key. Select GAIN X (X=level where the readings are not yet HIGH) and press "ENTER"-key.

C) Adjust the distance between the lamp and optics so that the maximum value (> 2000) is on the display.

D) Check with GAIN 0 that the smallest channel value is over 350. If the value is lower than 350, check the components of the light path (lamp, filter, fibre bundle, lenses...)

10. CHECKING THE A/D OFFSET

10.1 Adjusting the offset

Instrument must be warm, installed with a filter wheel and track cover.

A) Press "CALC MODE"-key. Select 1 ADJUSTMENTS and press "ENTER"-key. Select 2 A/D OFFSET and press "ENTER"-key.

B) Select 405 and press "ENTER"-key.

C) Input "0" for "GAIN".

D) Adjust the trimmer R12 on pcb MACU2 to set the value on the right hand side of the display to 40. After adjusting re-install the track cover and re-check the value.

10.2 Checking the light path

10.2.1 Minimum light

A) Select 6 LIGHT CHANNEL and press "ENTER"-key.

B) Select 405 nm and press "ENTER"-key.

C) Select channels A(...H) and press "ENTER"-key. Select GAIN 0 and press "ENTER"-key. Before selecting a new channel press "STOP"-key and "ENTER"-key twice. The lowest channel value has to be 350. If is not, check the components of the light path.

10.2.2 Checking the detector electronics (D/AC)

A) Select "3 LIGHT ALL" and press "ENTER"-key. Select filter 1 (340 nm) and press "ENTER"-key. Select GAIN 0 and press "ENTER"-key.

B) If the maximum value is over 350 on the display, carry out the following measurements, otherwise go to the point C).

- Select GAIN 1(...7) and press "ENTER"-key. When selecting another GAIN press "STOP"-key once and "ENTER"-key twice. COUNT-value has to increase 180...400 COUNTS/gain step.

– If the COUNT-value is not sufficient when entering a new GAIN, D/AC (on pcb MACU2: D5) is damaged and it has to change.

C) Press "STOP"-key twice and lock the trimmer on pcb MACU2 with locking lacquer.

11. ADJUSTING THE PRINTER (option)

A) Connect and oscilloscope to D7 pin 39 on pcb SKANPRI2. Using trimmer R13 adjust the periodic time (T) of the pulses. See Figure 8-6.

B) Lock the trimmer with locking lacquer.

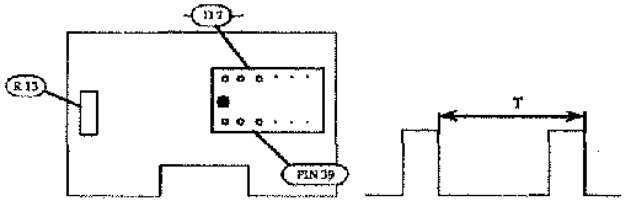

LABEL	TIME (µs) T
A	84
B	77
C	70

Figure 8-6

Measurement and adjustment points on pcb SKANPRI2 from the soldering side

12. TEST PROGRAMS

See from this chapter pages "Test programs".

13. PROGRAM STORE TEST

13.1 Edit a measurement program (for example):

MEAS.MODE	- 1 ABSORBANCE
FILTER	- 405 nm
BLANK	- NO REAG.BLANK

13.2 Store the program:

A) When the instrument displays READY press "SAVE"-key and the instrument displays PROGRAM NUMBER 1(...5). Press "ENTER"-key and the instrument displays ***SAVING DATA***.

B) Check with "RECALL"-key that the program has been stored. If the program has not stored the instrument displays "CHECKSUM ERROR". Otherwise it returns back to READY state.

14. TEST MEASUREMENTS

14.1 Detergent with 405 nm

Press "PARAM"-key and select 6 PLATE ANALYSIS. Press "ENTER"-key and select 2 (ON). Press "ENTER"-key and it returns to READY state. Press "PARAM"-key and select 2 PLATE MOVEMENT. Press "ENTER"-key, select 2 STEP MODE***) and press "ENTER"-key.

Place the detergent plate to the plate carrier and start the measurement by pressing "START"-key.

Printing to the external printer by pressing "SEND ABS"-key.

***) Repeat the measurements with 1 CONTINUOUS MODE.

RESULTS:

DETERGENT : < 0.050 Abs (MAX/WHOLE PLATE)

DELTA : < 0.010 Abs (DELTA/WHOLE PLATE)

14.2 Accuracy 405 nm

Measure NDF-cassette with 1 CONTINUOUS MODE: Press "PARAM"-key, select 2 and press "ENTER"-key. Select 1 and press "ENTER"-key. Press "MEAS PARAM"-key, select 2 and press "ENTER"-key. Measurement is started by "START"-key.

RESULTS:

COLUMN/MIN...MAX : +/– 2.0% or 0.007 Abs

COLUMN/DELTA% : < 2.0%

BLACK LEVEL : > 3.1 Abs

14.3 Precision 405 nm

Measure NDF-cassette with CONTINUOUS mode. Press "PARAM"-key, select 2 and press "ENTER"-key. Select 1 and press "ENTER"-key. Press "CALC MODE"-key. Select 2 TESTS and press "ENTER"-key. Select 4 REPROD.20M and press "ENTER"-key. Edit the serial number of the instrument and press "ENTER"-key three times. Press "START"-key. Printing is made by "SEND ABS"-key.

RESULTS:

PRECISION CV% : < 1.0

Testing and adjusting

Built-in Adj. Programs

Multiskan MS is equipped with adjustment programs described in the following text. First you must put a pin 4 up. "ADJUSTMENTS" and "TESTS" programs main menu is entered by pressing "CALC MODE"-key. Following adjustment programs menu can be entered by selecting "ADJUSTMENTS" from the main menu:

1. TRACK ADJUST
2. A/D OFFSET
3. LIGHT ALL
4. BLACK ALL
5. MIMA CHANNEL
6. LIGHT CHANNEL
7. BLACK CHANNEL
8. LI-BL CHANNEL
9. CONT. MEAS
10. CLOCK FREQUENCY

Selection is carried out by pressing "ENTER"-key when the wanted program name is displayed.

All adjustment programs, except program 10, can be interrupted with "STOP"-key.

OPERATING INSTRUCTIONS

1. TRACK ADJUST

With this adjustment program it is possible to roughly adjust the positioning of the plate carrier.

"TRACK ADJUST" is only used to check that the positioning of the microplate is roughly correct. During the test pcb MACU2 has to be removed. Always after removing pcb MACU2 it is recommended to check instrument's detergent values.

NOTICE! Bad detergent values can be resulted from either incorrect carriage positioning or misaligned pcb MACU2.

A) Select "TRACK ADJUST" and press "ENTER"-key.

1.1 SLIT OFF

A) Select "SLIT OFF" and press "ENTER"-key.

B) Insert the alignment plate in the track.

C) Select "COLUMN 1" and press "ENTER"-key. — The track goes to the place 1.

D) Check with the alignment pin. — The alignment pin must hit in the hole.

E) Select "COLUMN 12" and press "ENTER"-key. — The track goes to the place 12.

F) Check with the alignment pin. — The alignment pin must hit in the hole.

G) Press "STOP"-key. — The track comes out.

H) Turn the alignment plate and perform adjustments again from the point C).

1.2 SLIT ON

A) Select "SLIT ON" and press "ENTER"-key.

B) Check with the alignment pin. — The alignment pin must hit in the hole.

1.3 Computer Program

A) Perform a computer program Multiskan Remote Test.

B) Follow the instructions in the package.

2. A/D OFFSET

"A/D OFFSET" adjustment program is used to adjust the offset of the measurement signal.

A) Select "A/D OFFSET" and press "ENTER" key.

B) Install 405 nm filter. Make sure track cover is properly installed.

C) Input "0" for "GAIN".

D) Adjust trimmer R12 on pcb MACU2 to set the values on the right hand side to 40. After adjusting re-install track cover and re-check the value.

E) Lock the trimmer with locking enamel.

3. LIGHT ALL

This adjustment program is used to check the highest and lowest light levels of all channels.

A) Select 405 nm filter.

B) Input "0" for "GAIN".

Values on the display illustrate the levels of the channels with highest and lowest light levels. Ratio between levels should not be higher than two.

4. BLACK ALL

This adjustment program is used to check the highest and lowest black levels of all channels.

A) Select 405 nm filter.

B) Input "7" for "GAIN".

Values on the display illustrate the highest and lowest channel levels compared to the 0-level. Highest value should be below 300.

5. MIMA CHANNEL

This adjustment program is used to check the light and black levels of one channel.

A) Select 405 nm filter.

B) Select "CHANNEL" A-H. Input "0" for "GAIN".

Values on the display illustrates levels of the selected channel during light and dark measurement period.

6. LIGHT CHANNEL

This adjustment program is used to check the light level of one channel.

A) Select 405 nm filter.

B) Select "CHANNEL" A-H. Input "0" for "GAIN".

Instrument measures four times the light level of the selected channel and displays maximum and minimum values. Maximum and minimum values per channel should be approximately equal.

7. BLACK CHANNEL

This adjustment program is used to check the black level of one channel.

A) Select 405 nm filter.

B) Select "CHANNEL" A-H. Input "7" for "GAIN".

Instrument measures four times the black level of the selected channel and displays maximum and minimum values. Maximum and minimum values per channel should be approximately equal.

8. LI-BL CHANNEL

This adjustment program equals normal "CONTINUOUS MODE" measurement.

A) Select 405 nm filter.

B) Select "CHANNEL" A-H. Input "0" for "GAIN".

Instrument measures four times the difference between light level and black level of the selected channel and displays maximum and minimum values. Maximum and minimum values per channel should be approximately equal.

9. CONT. MEAS.

Instrument measures continuously all channels without calculating the measurement results. This program can be used to check functioning of the measurement operation.

A) Select filter 405 nm.

B) Input "0" for "GAIN".

10. CLOCK FREQUENCY

This adjustment program is used when the frequency of the REAL TIME CLOCK circuitry on pcb MUSCU2 is adjusted. Frequency determines the accuracy of the internal clock.

A) When instrument displays "ADJUST FREQ-KEY",
adjust the frequency on D28 pin 13 with trimmer
capacitor C4 on pcb MUSCU2 to 32768 Hz.
Use counter to determine the frequency.

NOTICE! Do not interrupt the program with "STOP" key. If the program is interrupted with "STOP" key, the clock is stopped until this program is re-entered and interrupted using other key than "STOP".

Testing and adjusting

Built-in Test Programs

Multiskan MS is equipped with test programs described in the following text. First you must put a pin 4 up. "ADJUSTMENTS" and "TESTS" programs main menu is entered by pressing "CALC MODE"-key. Following test programs menu can be entered by selecting "TESTS" from the main menu:

1. RS-INTERFACE
2. KEYBOARD
3. STABILITY-6HR
4. REPROD. 20 M.
5. LINEARITY
6. PRINTER
7. FILTER ROTATION

OPERATING INSTRUCTIONS

1. RS-INTERFACE

This test is used to check the operation of the serial connection. Test checks transmit/receive and handshake lines.

A) Insert test connector (pins 2&3 and 6&20 short-circuited) to RS-connector.

B) Select "1 RS-INTERFACE" and press "ENTER"-key.

Instrument should display "DATA OK" and "DTR/DSR OK" when test connector is inserted and "DATA ERROR" and "DTR/DSR ERROR" when test connector is unplugged.

NOTICE! In order to check the handshake signals, handshake has to be set ON with switch 4 of the serial RS-232 switch bank in the rear of the instrument.

C) Repeat steps a)-b) using all selectable Baud rates.

Test is terminated automatically.

2. KEYBOARD TEST

This test is used to check operation of the keyboard.

A) Select "2 KEYBOARD" and press "ENTER" key.	Instrument displays the first key to be pressed.
B) Press the keys according to the display.	Next key to be pressed is displayed.

An audio signal is given when a key is pressed and if the input is correct, test program displays the next key in sequence.

Test is terminated automatically after the last key is pressed.
Test can be interrupted by pressing "STOP"-key.

3. STABILITY-6HR

This test can be used to check the stability of the instrument. It can also be used as a fault-finding program to track down infrequently occurring malfunction.

A) Select "3 STABILITY 6HR" and press "ENTER"-key.	
B) Enter instrument serial number, user code and filter to be used. Press "START".	After each measurement instrument displays number of the measurements and the time before next measurement.

Instrument measures the whole plate every 10 minutes for 6 hours.

Program calculates MEAN, MIN, MAX, DELTA, S.D., DELTA% and CV% values using the measurement results. After the instrument displays "TEST READY", values can be sent to an external printer by pressing "SEND ABS"-key.

Test can be interrupted by pressing "STOP"-key.

4. REPROD. 20 M.

This test can be used to check instrument's reproducibility over 20 measurements.

A) Select "4 REPROD.20 M." and press "ENTER" key.	
B) Enter instrument serial number, user code and filter to be used. Press "START".	After each measurement instrument displays the measurement number. After measurements instrument displays "TEST READY".

Instrument measures the whole plate 20 times.

Program calculates MEAN, MIN, MAX, DELTA, S.D., DELTA% and CV% values using the measurement results. After the instrument displays "TEST READY", values can be sent to an external printer by pressing "SEND ABS"-key.

Test can be interrupted by pressing "STOP"-key.

5. LINEARITY

This test can be used to check the linearity of the instrument.

A) Select "5 LINEARITY" and press "ENTER"-key.

B) Enter instrument serial number, user code and filter to be used. Press "START". — After measurement instrument displays "TEST READY".

Program calculates deviation in absorbance values and percentages using linear dilution series. After the instrument displays "TEST READY", values can be sent to an external printer by pressing "SEND ABS"-key.

Test can be interrupted by pressing "STOP"-key.

6. PRINTER TEST

Printer test prints a test character set to the internal printer.

A) Select "7 PRINTER" and press "ENTER"-key. — Test character set is printed

Test can be interrupted by pressing "STOP"-key.

7. FILTER ROTATION

Filter rotation test positions each filter in ascending order starting from filter 1. Test can be used to adjust the filter wheel positioning.

A) Select "7 FILTER ROTATION" and press "ENTER"-key. — "FILTER TEST" is displayed.

B) Press any key except "STOP". — Filter number 1 is positioned.

C) Press any key except "STOP". — Next filter is positioned.

Upper row displays the filter which is positioned and the lower row displays the next filter to be positioned.

Test can be interrupted by pressing "STOP".

Section 9

Power supply

Power supply

Contents

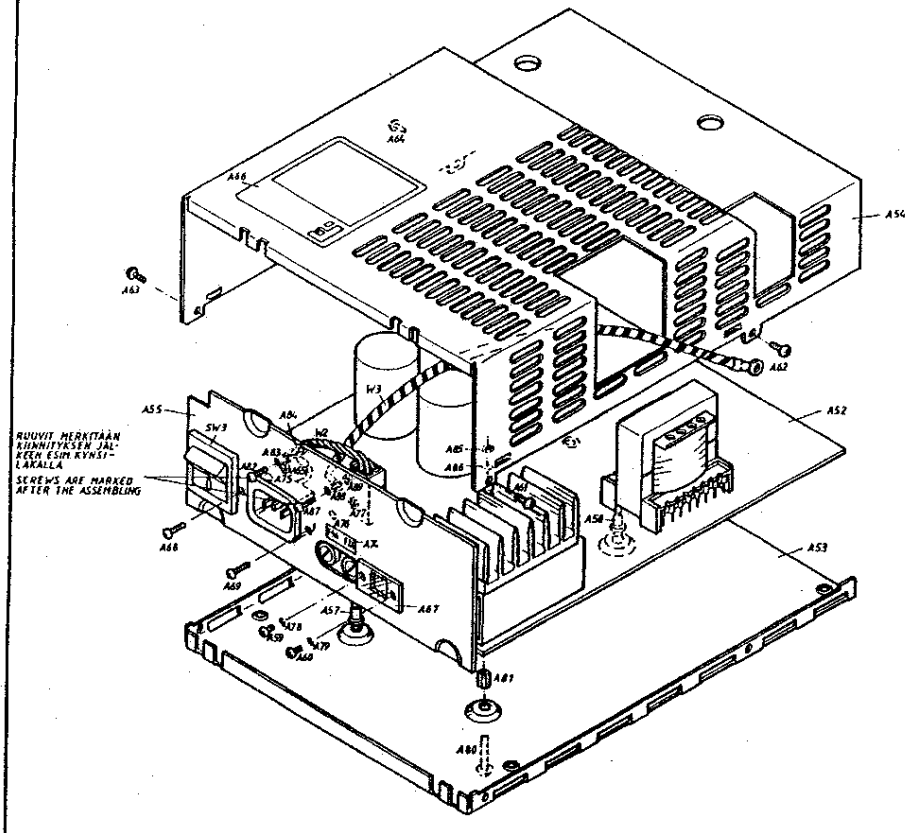

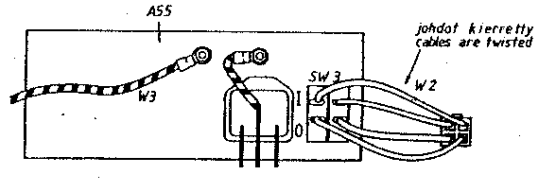

			FINLANDIA INTERFACE	Liittyy piir.	Suhde: 1:2
			Kokoonpano		Suunn. KK Piirt. EK Tark. RA Hyv.
	19.2.99	EK			
	1.6.98	RA			
MUUTOS	Pvm	Nimi			4092

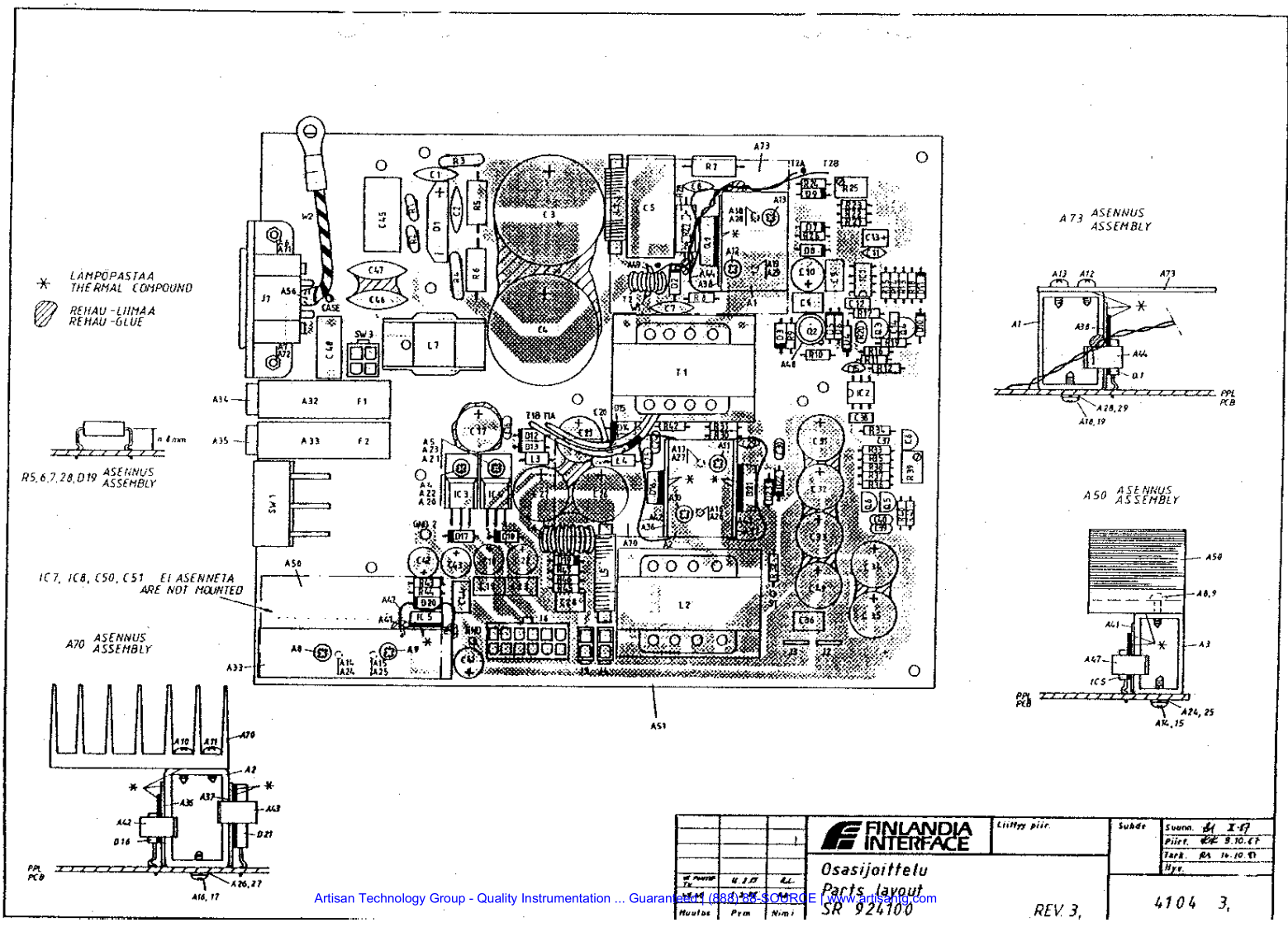

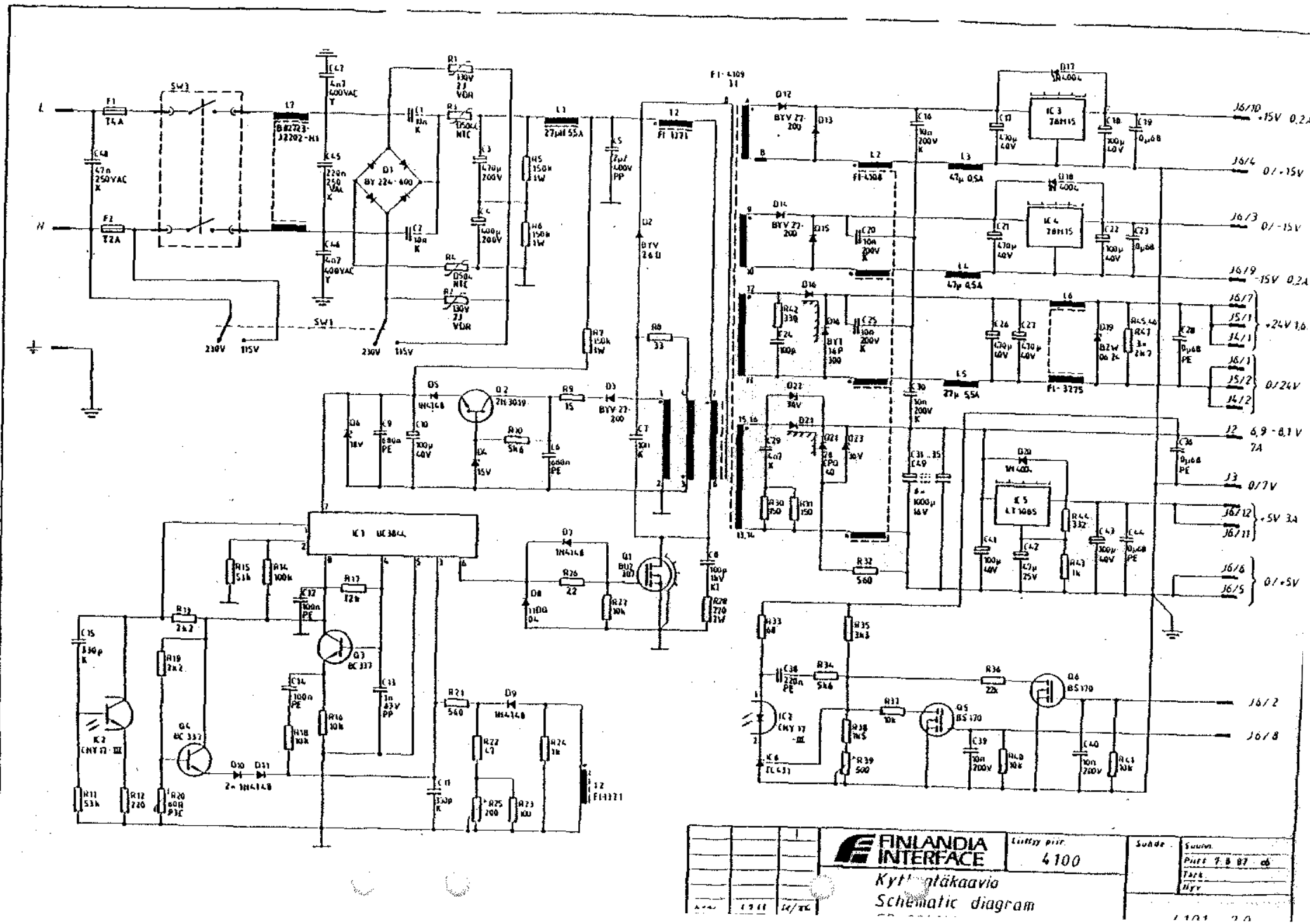
FINLANDIA INTERFACE
Kytkentäkaavio
Schematic diagram
4100
IC1 UC384L
IC2 CNY 17-III
IC3 78H15
IC4 78H15
IC5 LT1085
Q1 BUZ 307
Q2 2N3019
Q3 BC 337
Q4 BC 337
Q5 BS170
Q6 BS170
D1 BY 224-600
F1 T4A
F2 T2A
SW1
SW3
230V
115V
J6/10 +15V 0,2A
J6/4 0/-15V
J6/3 0/-15V
J6/9 -15V 0,2A
J6/7
J5/1
J4/1
+24V 3,6
J6/1
J5/2
J4/2
0/24V
J2 6,9 - 8,1 V 7A
J3 0/7V
J6/12
J6/11
+5V 3A
J6/6
J6/5
0/+5V
J6/2
J6/8

IPS 93

TECHNICAL MANUAL

date 22.08.1996 change date - appr. .....

CONTENTS

1. TECHNICAL SPECIFICATIONS

1.1 INPUT AND GENERAL

Parameter	Test conditions	Min.	Typ.	Max.	Notes
Working input voltage range(s)	Load=min to max Tamb= +10 to +50°C	180V 90V	230V 115V	260V 136V	
Working input frequency range	Input voltage=min to max	45Hz	50Hz	65Hz	
Inrush current	Input=260V, 50Hz Tamb=25°C			25A	40ms max
Input power	Input voltage=min to max	50W	100W	150W	
Supplementary overcurrent protection (fuses)		3,5A		2x3,5A/250V UL198G Time Delay	
Output hold time	Input= (a) 230V, 50Hz (b) 115V, 60Hz load=max	 20ms 20ms			
Leakage current line to ground	Input=250V, 60Hz			0,5mA	
Dielectric withstand voltage	50Hz, 1 minute Input to output Input to ground/chassis	 4kV 1,5kV			
Power factor (cos v)	Load=typical	0,55			
Efficiency	Load=typical	75%			

Input voltage range is selected by automatic line voltage switching circuit.

1.2 OUTPUTS AND GENERAL

Parameter	Test conditions	Min.	Typ.	Max.	Notes
Total output power (load)	Output loads within specs Tamb=10 to 50°C Input=min to max	37W	75W	115W	Typ. value for reference only

Output 0V is connected to case (chassis).

All outputs shall withstand short circuit (one at a time).
Interruption of load connected to any single output shall not result in abnormally high voltages in other outputs.

The following test conditions apply to all outputs unless otherwise specified:

(1) All other outputs carry their stated typical load
(2) Input = min to max (both ranges)
(3) Tamb = 10-50°C

1.2.1 OUTPUT 1:5,1V

Parameter	Test conditions	Min.	Typ.	Max.	Notes
Continuous output current		0,5A	1,5A	2,0A	
Peak pulse current	Repetative 20ms max			3A	
Output voltage		5,00	5,10	5,20	
Load regulation				±1%	
Line regulation				±0,5%	
Ripple voltage -RMS -Peak to peak				 10mV 100mV	
Short circuit current	(Temperature limited)			<4A	
Output voltage limit				7,2V	
Rise time to 5,0V	Iout = 2A Input = 90V, 50Hz			100ms	
Temperature drift				0,02%/°C	
Capacitive load				> 100uF	
Output impedance				60mohm/ 200Hz	

1.2.2 OUTPUT 2: 6,8-8,0V

Parameter	Test conditions	Min.	Typ.	Max.	Notes
Output voltage Vout= Bin x 0,4V+6,8V Bin = 00...11	Iout = min to max V control "1" >2V "0" < 0,8V	6,8V		8,0V	Linear to ±50mV
Continuous output current		5A	6A	7A	Halogen lamp
Output voltage limit				11V	Transzorbdiode
Output settling time (to 1%)	Iout = typical			1ms	Between steps
Line regulation				±0,2%	
Load regulation				±0,5%	
Ripple voltage -RMS -peak to peak				 100mV 100mV	
Short circuit current				8A	
Control input	CMOS-TTL-compatible				
Temperature drift				0,02%/°C	
Capacitive load				> 100uF	

Bin-control input open ⇒ output 6,8V

1.2.3 OUTPUT 3: 24V

Parameter	Test conditions	Min.	Typ.	Max.	Notes
Output voltage		23,0V	24,0V	25,0V	
Continuous output current		0A	1A	1,6A	(peak 7A)
Load regulation				2%	
Line regulation				0,5%	
Ripple voltage -RMS -peak to peak				 20mV 150mV	
Short circuit current				5A	RMS
Output voltage limit				34V	Transzorbdiode
Capacitive load				100uF	
Rise time to 24V				200ms	10-90%

1.2.4 OUTPUTS 4 AND 5: ±15V

Parameter	Test conditions	Min.	Typ.	Max.	Notes
Continuous output current		±20mA	±150mA	±200mA	
Output voltage		14,2	15V	15,8V	
Load regulation				±1%	
Line regulation				±1%	
Temp. drift				±°C	
Ripple voltage -RMS -peak to peak				 10mV 50mV	
Short circuit current				1,5A	
Output voltage limit				18V	Transzorbdiode
Capacitive load				100uF	
Rise time to ±15V				100ms	10-90%

2. WORKING PRINCIPLE

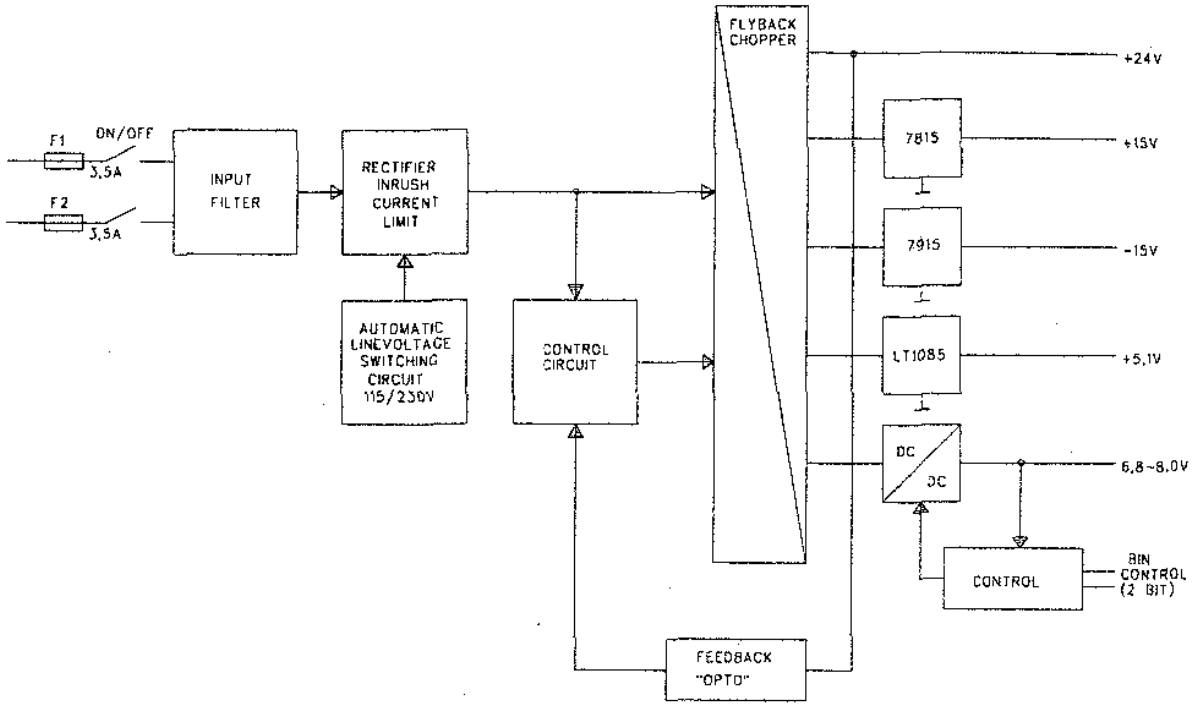

Figure 1. The block diagram of IPS 93.

2.1 INPUT

There are input filter, varistors, rectifier with automatic line voltage switching circuit (triac), inrush current limiting circuit (NTC) and the current limit in the input section. The component refer to schematic diagram, parts layout and parts list.
The input filter and varistors (R4, R5) filter and cut the possible overvoltage, which occur in the mains network. When the power supply is connected to the mains, the NTC-resitors (R3, R6) limit the current. The automatic line voltage switching circuit selects with triac the doubler or bridge circuit depending from the line voltage (115/230V).

2.2 OUTPUTS

There are many output voltages. Different outputs are connected together by magnetic (connect to same transformer T2).
The device contains a feedback circuitry, which measures the +24V output voltage. The measuring element is a shunt regulator (N7), which has an internal reference voltage of 2,5V. The voltage information is then fed to the control circuit through an optoisolator N3, which separates the primary and secondary side galvanically from each other.

The output of 6,8-8,0V is made from +24V voltage with DC/DC-converter. Output follows the bin-control input between 6,8-8,0V. The feedback circuitry is N8. There is output voltage limiting transzorbdiode V37. Resistor R53 measures current. There is used the linear regulators in the +5,1V and ±15V outputs because of the outputs are stable enough and the short-circuit current is lower.

3. CONNECTORS

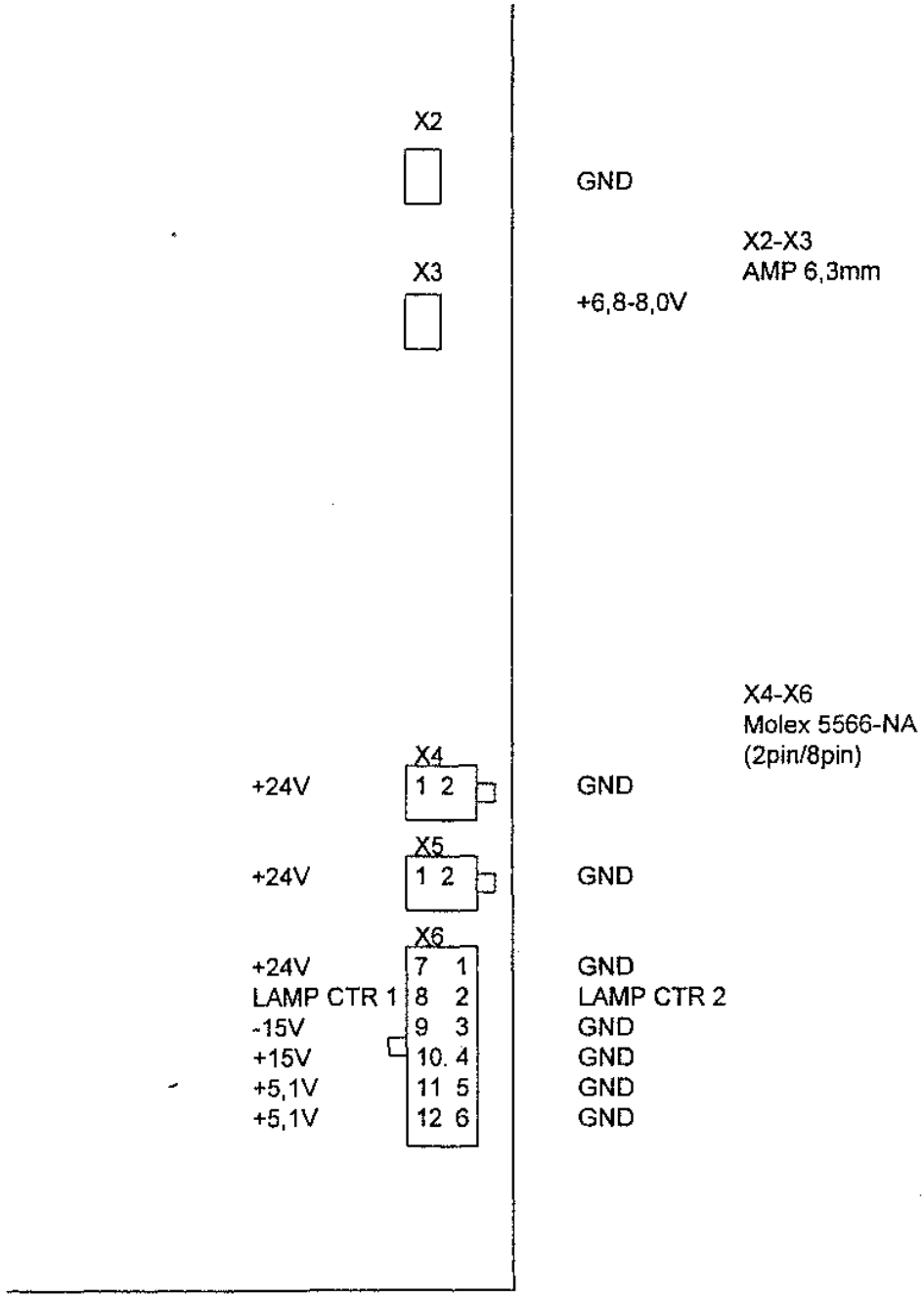

4. SCHEMATIC DIAGRAM

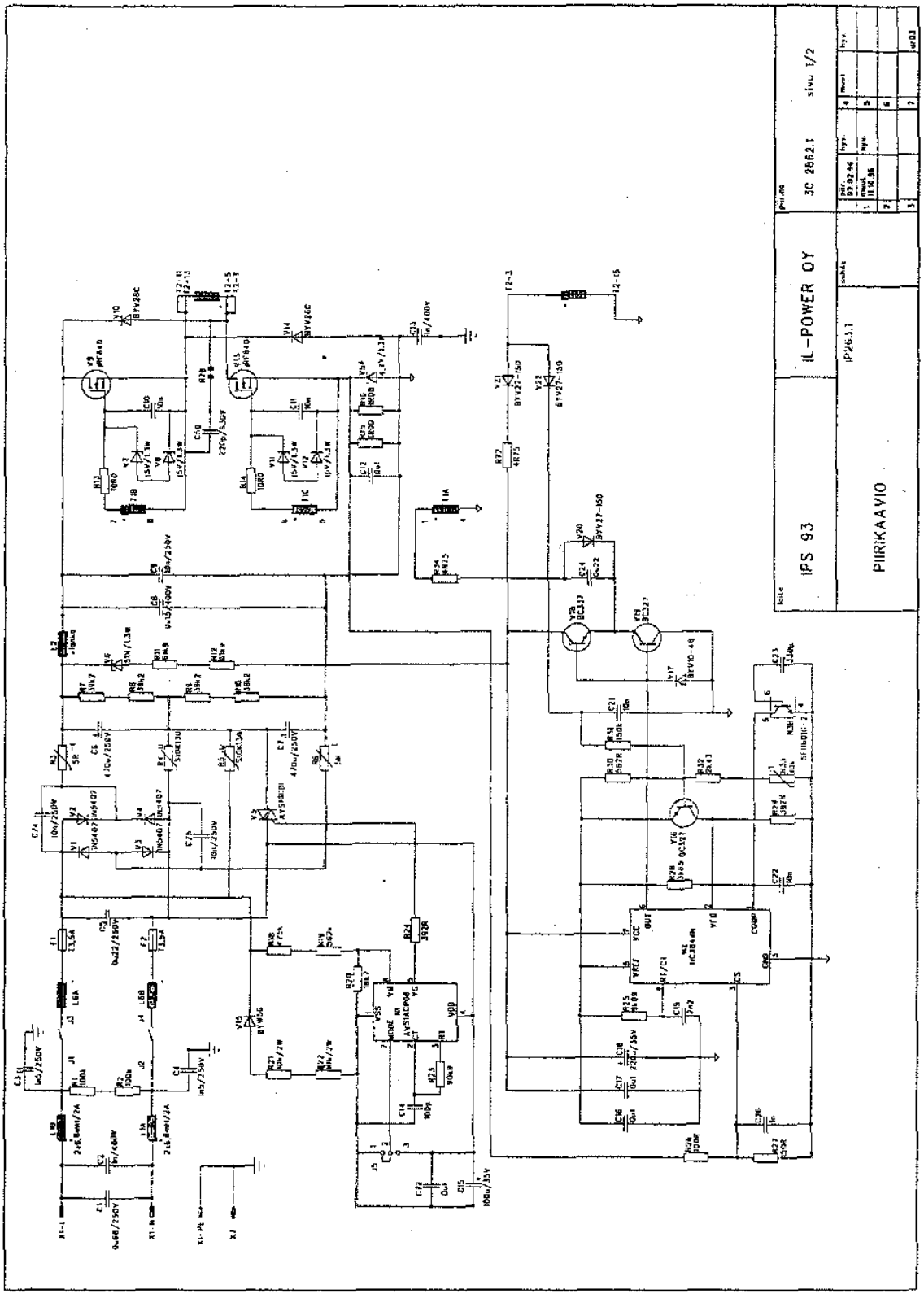

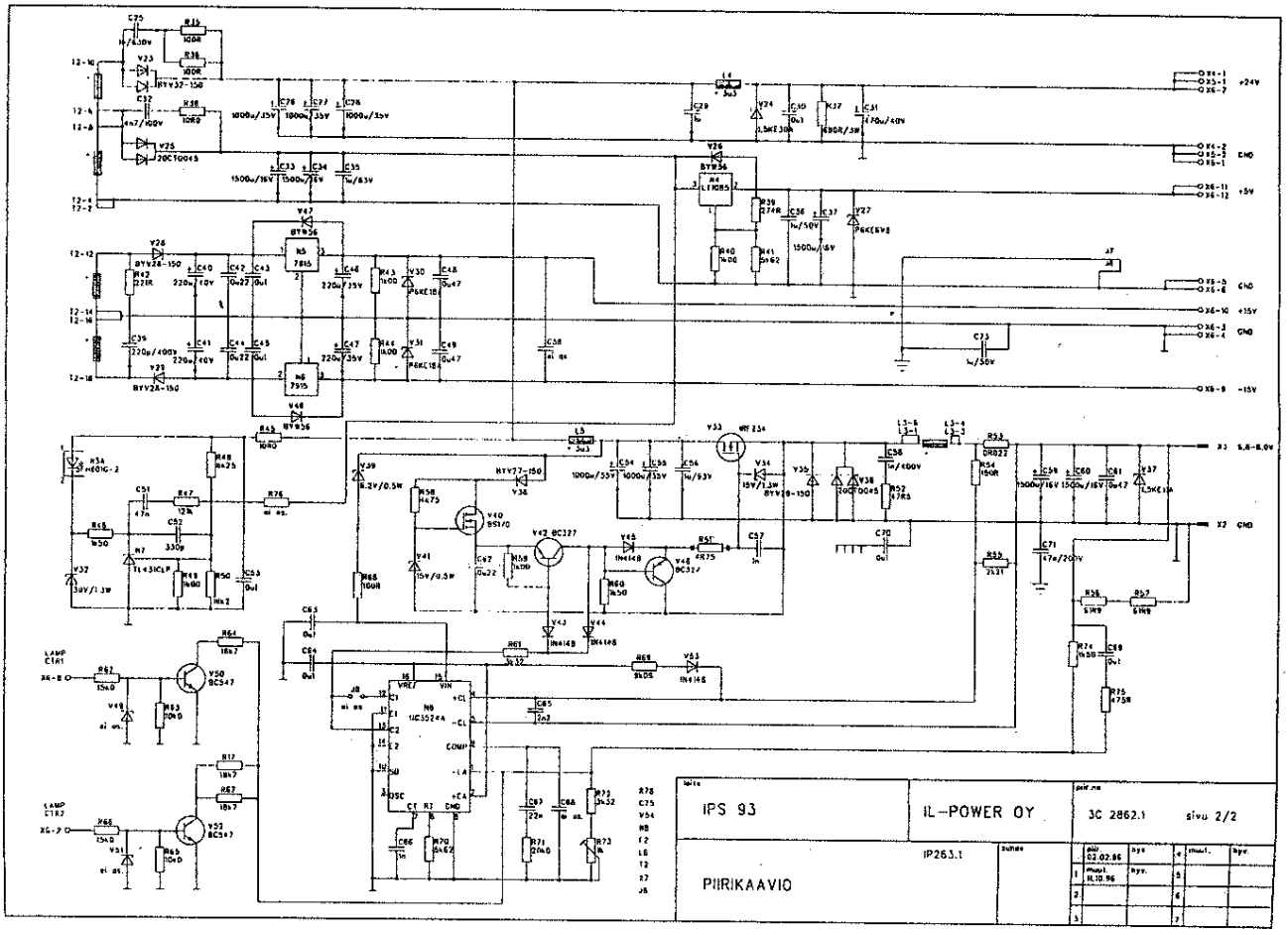

5. LAYOUT

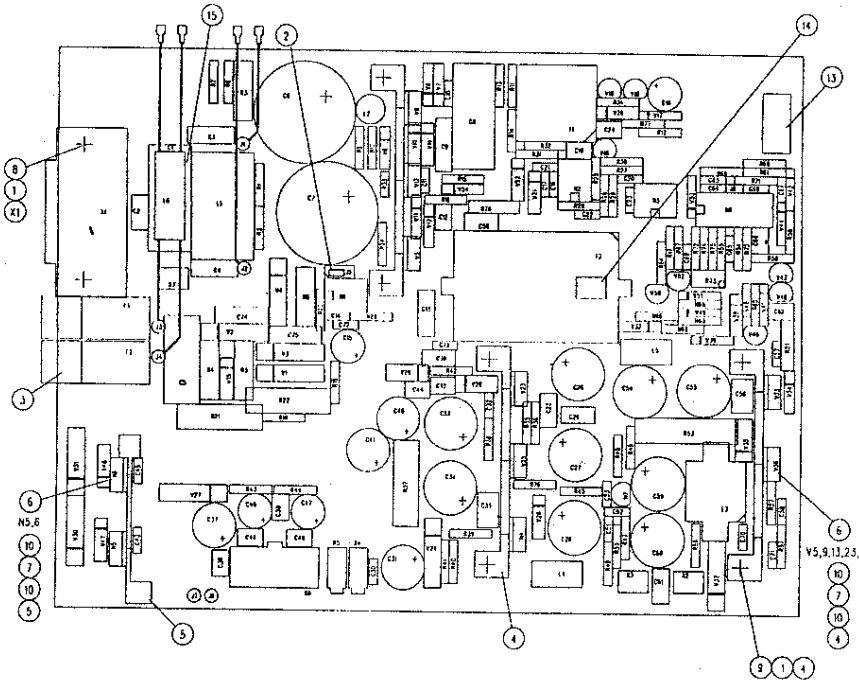

laite: IPS 93	IL-POWER OY	piir.no: 3D 2863.1
OSASIJOITTELU	IP263.1	suhde: 1:1

pvr. 28.02.95	hyv.	4	muut.	hyv.	
muut. 02.07.96	hyv.	5			
2		6			
3		7			

6. ASSEMBLY

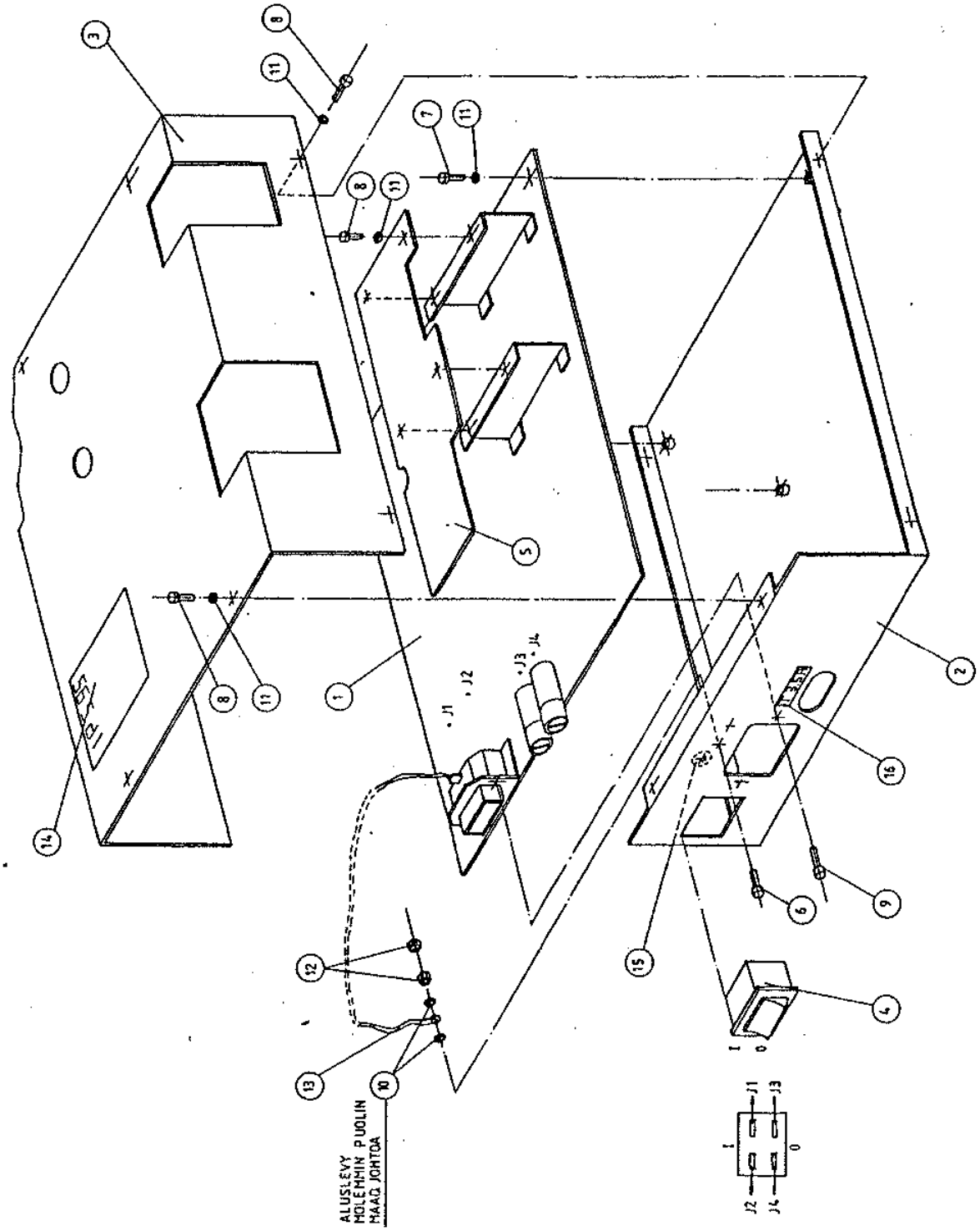

7. PART LISTS, ASSEMBLY AND POWER BOARD

IL-POWER OY PARTS LIST 08.10.96*V21-1

IL95076 IPS93

Drawing number: Date:

* 25.7-96 KT

* Tark./ Hyv. Insp./ Appr

*

* Osal/Parts list: 4A2857.2

* Vikatestit: 4N3180

* Assembly: 3H3201

*

100	IL90067	POWER BOARD IPS 93 IL-POWER OY	1.00	PCS	1	
	*					
110	IL81242	BOTTOM PLATE 3E 2858.1 IPS93	1.00	PCS	2	
115	IL81243	COVER PLATE 3E 2859.1 IPS93	1.00	PCS	3	
120	IL52520	MAINS 2-p black/1/4,8mm Molveno A412	1.00	PCS	4	CSA
125	IL81245	EXTRA COOLING 4E 2861 IPS93	1.00	PCS	5	
130	IL60415	SCREW LK M4x10 Zn	1.00	PCS	6	
135	IL60210	SCREW LK M3x8 Zn	6.00	PCS	7	
140	IL60205	SCREW LK M3x6 Zn	10.00	PCS	8	
	*	9:2kpl RISTIU.RUUVI M2,9x				
	*	8, TULLUT X1n MUKANA				
	*	9:2pcs SCREW M2,9x8 (X1)				
160	IL61220	WASHER M4 DIN6798	2.00	PCS	10	
165	IL61120	WASHER M3 DIN6798	16.00	PCS	11	
170	IL61200	NUT M4 DIN 934	2.00	PCS	12	
175	IL75944	GND-CABLE 4J 3056.2 IPS93	1.00	PCS	13	
180	IL70057	TYPE PLATE IPS93 4N3152	1.00	PCS	14	
185	IL53450	GND-STICKER 10x10 mm ELFVING	1.00	PCS	15	
190	IL70415	FUSE LABEL 2x T 3,5A	1.00	PCS	16	

IL-POWER OY PARTS LIST 08.10.96*V21-1

IL90067 TEHOKORTTI IPS 93
Drawing number: Date:
* 14.10.1996 1a
* Osal/Parts list: 4A2856.2
* Schematic diagr: 3C2862.1
* Parts layout: 3D2863.1
*
* Tässä luettelossa CSA/UL-
* merk.osia ei saa korvata
* muun tyypp.(valm.)osilla
*

100	IL80205	PCB IP263.1 IL-POWER OY	1.00	PCS	1	UL
	*					
110	IL10365	MF-RESISTOR 100k 0,6W 1%	2.00	PCS	R1,2	
115	IL11502	NTC-RESIST 5R0 3A D504CS	2.00	PCS	R3,6	CSA
120	IL11616	VARISTOR SIOV-S10K130 SIE CSA app.	2.00	PCS	R4,5	CSA
125	IL10315	MF-RESISTOR 39k2 0,6W 1%	4.00	PCS	R7-10	
130	IL10335	MF-RESISTOR 61k9 0,6W 1%	2.00	PCS	R11,12	
135	IL10025	MF-RESISTOR 10R0 0,6W 1%	4.00	PCS	R13,14,38,45	
140	IL10000	MF-RESISTOR 1R00 0,6W 1%	2.00	PCS	R15,16	
145	IL10282	MF-RESISTOR 18k7 0,6W 1%	4.00	PCS	R17,20,64,67	
150	IL10405	MF-RESISTOR 475k 0,6W 1%	1.00	PCS	R18	
155	IL10410	MF-RESISTOR 562k 0,6W 1%	1.00	PCS	R19	
160	IL10560	MOKS-RESISTOR 10k0 2W 5%	2.00	PCS	R21,22	
165	IL10360	MF-RESISTOR 90k9 0,6W 1%	1.00	PCS	R23	
170	IL10115	MF-RESISTOR 392R 0,6W 1%	2.00	PCS	R24,29	
175	IL10245	MF-RESISTOR 9k09 0,6W 1%	2.00	PCS	R25,69	
180	IL10080	MF-RESISTOR 100R 0,6W 1%	4.00	PCS	R26,35,36,68	
185	IL10090	MF-RESISTOR 150R 0,6W 1%	2.00	PCS	R27,54	
190	IL10195	MF-RESISTOR 3k65 0,6W 1%	1.00	PCS	R28	
195	IL10125	MF-RESISTOR 562R 0,6W 1%	1.00	PCS	R30	
200	IL10375	MF-RESISTOR 150k 0,6W 1%	1.00	PCS	R31	
205	IL10178	MF-RESISTOR 2k43 0,6W 1%	1.00	PCS	R32	
210	IL11520	NTC-RES.10k0 1W Philips 232264262103	1.00	PCS	R33	
215	IL10015	MF-RESISTOR 4R75 0,6W 1%	3.00	PCS	R34,51,77	
	*	R51 AS FERR.HELMILLÄ/				
	*	R51 ASS.WITH FERR.BEADS				
230	IL10790	WIR.RES.680R 3/6W C3A/CW2 C3A/CW2B	1.00	PCS	R37	
235	IL10105	MF-RESISTOR 274R 0,6W 1%	1.00	PCS	R39	
240	IL10145	MF-RESISTOR 1k00 0,6W 1%	5.00	PCS	R40,43,44,49,59	
245	IL10220	MF-RESISTOR 5k62 0,6W 1%	2.00	PCS	R41,70	
250	IL10100	MF-RESISTOR 221R 0,6W 1%	1.00	PCS	R42	
255	IL10160	MF-RESISTOR 1k50 0,6W 1%	3.00	PCS	R46,60,74	
260	IL10370	MF-RESISTOR 121k 0,6W 1%	1.00	PCS	R47	
265	IL10240	MF-RESISTOR 8k25 0,6W 1%	1.00	PCS	R48	
270	IL10275	MF-RESISTOR 16k2 0,6W 1%	1.00	PCS	R50	
275	IL10060	MF-RESISTOR 47R5 0,6W 1%	1.00	PCS	R52	
280	IL10905	WIR.RES.R022 4W 350-8 Wit Witrohm	1.00	PCS	R53	
285	IL10175	MF-RESISTOR 2k21 0,6W 1%	1.00	PCS	R55	
290	IL10068	MF-RESISTOR 61R9 0,6W 1%	2.00	PCS	R56,57	
295	IL10210	MF-RESISTOR 4k75 0,6W 1%	1.00	PCS	R58	
300	IL10190	MF-RESISTOR 3k32 0,6W 1%	2.00	PCS	R61,72	
305	IL10270	MF-RESISTOR 15k0 0,6W 1%	2.00	PCS	R62,66	
310	IL10250	MF-RESISTOR 10k0 0,6W 1%	2.00	PCS	R63,65	

315	IL10285	MF-RESISTOR 20k0 0,6W 1%	1.00	PCS	R71
320	IL11115	TRIMMER 1k 25 turns stay	1.00	PCS	R73
325	IL10120	MF-RESISTOR 475R 0,6W 1%	1.00	PCS	R75
*		R76: EI AS/ NOT CONNECTED			
*		R78: KYTK.LANKA,FERR.HELM			
*		+KOR.PALAT / CONN.WIRE,			
*		FERR.BEADS+RISING PEACES			
*					
355	IL20776	X-CAPACITOR 680n/250Vac MMX Evox	1.00	PCS	C1 CSA
360	IL20725	MET.PAPER CAP. 1n0/400VacWKO 102 MCPC	2.00	PCS	C2,13 CSA
365	IL20700	Y-CAP.1n50/250Vac PME271Y PME271Y415	2.00	PCS	C3,4 CSA
370	IL20765	X-CAP. 220n/250Vac PME271M622	1.00	PCS	C5 CSA
375	IL23565	EL.CAP 470u/250V KMH NCC	2.00	PCS	C6,7
380	IL20510	POLYP 0u15/400V PMR Evox	1.00	PCS	C8
385	IL20740	X-COND.10n0/250Vac RX 15	3.00	PCS	C9,74,75 CSA
390	IL20020	POLYEST.CAP. 10n0/63V MMK05 EVOX	4.00	PCS	C10,11,21,22
395	IL20040	POLYEST.CAP. 100n/63V MMK05 EVOX	5.00	PCS	C12,43,45,53,69
400	IL20120	CER.CAP.100p/100V PHI 681	1.00	PCS	C14
405	IL22613	EL.CAP. 100u/35V SXE NCC	1.00	PCS	C15
410	IL20170	CER.CAP. 100n/50V 8121N	7.00	PCS	C16,17,30,63,
*		C64,70,72			
420	IL22614	EL.CAP. 220u/35V SXE NCC	3.00	PCS	C18,46,47
425	IL20810	POLYP.CAP. 2n20/63V PFR5	1.00	PCS	C19
430	IL20152	CER.CAP. 1n00/50V 8121N	1.00	PCS	C20
435	IL20178	CER.CAP. 330p/100V 8121N 8121N X7R	2.00	PCS	C23,52
440	IL20045	POLYE.CAP. 220n/63V MMK05	4.00	PCS	C24,42,44,62
445	IL20898	POLYP.CAP. 1n00/630V . FKP3 WIMA	1.00	PCS	C25
450	IL22809	EL.CAP. 1000u/35V LXF Ncc	5.00	PCS	26-28,54,55
455	IL20625	POLYE 1u00/63V MMK7,5 EVOX	3.00	PCS	C29,35,56
460	IL22528	EL.CAP 470u/40V EKR Roede	1.00	PCS	C31
465	IL20016	POLYEST.CAP. 4n70/100V MMK05 Evox	1.00	PCS	C32
470	IL22803	EL.CAP.1500u/16V LXF Ncc	5.00	PCS	C33,34,37,59,60
475	IL20060	POLYEST.CAP. 1u00/50V MMK05 EVOX	1.00	PCS	C36
*		C38,68:EI AS/NOT CONNECT			
485	IL20215	CER.CAP. 220p/400V RIZ606 ROE	1.00	PCS	C39
490	IL22526	EL.CAP. 220u/40V EKR Roederstein	2.00	PCS	C40,41
495	IL20055	POLYEST.CAP. 470n/63V MMK05 EVOX	3.00	PCS	C48,49,61
500	IL20870	POLYP.CAP 220p/630V KP173	1.00	PCS	C50
505	IL20035	POLYEST.CAP. 47n0/63V MMK05 EVOX	1.00	PCS	C51
510	IL20000	POLYES.CAP 1n00/63V MMK05	1.00	PCS	C57
515	IL20230	CER.CAP. 1n00/400V RIZ607	1.00	PCS	C58
520	IL20005	POLYES.CAP.2n20/63V MMK05	1.00	PCS	C65
525	IL20808	POLYP.CAP. 1n00/63V PFR5	1.00	PCS	C66
530	IL20030	POLYEST.CAP. 22n0/63V MMK05 EVOX	1.00	PCS	C67
535	IL20185	CER.CAP. 47n0/200V 8121N X7R	1.00	PCS	C71
540	IL20190	CER.CAP.1u/50V 20% 5R X7R8121N	1.00	PCS	C73
*					
550	IL31122	DIODE 3A/800V 1N5407	4.00	PCS	V1-4
555	IL32400	TRIAK.8A/600V AVS10CBI ST	1.00	PCS	V5
560	IL30158	ZENER 51V/1,3 W ZPY51 ITT	1.00	PCS	V6
565	IL30132	ZENER 15V/1,3 W ZPY15 ITT	5.00	PCS	V7,8,11,12,34
570	IL32555	FET 0R85/500V IRF840 N-ka	2.00	PCS	V9,13
575	IL31210	DIODE 1A/600V BYV26C PHI	2.00	PCS	V10,14
580	IL31110	DIODE 2A/1000V BYW56 PHI	4.00	PCS	V15,26,47,48
585	IL32040	TRANSISTOR 0,5A/45V BC327	4.00	PCS	V16,19,42,46
590	IL31030	DIODE 1A/30V BYV10-40 11 DQ 040	1.00	PCS	V17
595	IL32030	TRANSISTOR 0,5A/45V BC337	1.00	PCS	V18
600	IL31220	DIODE 2A/150V BYV27-150	4.00	PCS	V20-22,38

IL-POWER OY PARTS LIST 08.10.96*V21-3

605	IL31420	DIOD 2x10A/150V BYV32-150	1.00 PCS	V23	
610	IL30532	T.DIOD 30V/1,5kW 1,5KE30A	1.00 PCS	V24	
615	IL31410	DIODE 2x20A/45V 20CTQ045	2.00 PCS	V25,36	
620	IL30421	T.DIODE 6V8/600W P6KE6V8	1.00 PCS	V27	
625	IL31230	DIODE 3,5A/150V BYV28-150	3.00 PCS	V28,29,35	
630	IL30428	T.DIODE 18V/600W P6KE18A	2.00 PCS	V30,31	
635	IL30146	ZENER 30V/1,3 W ZPY30 ITT	1.00 PCS	V32	
640	IL32512	FET 0R050/60V IRFZ34 IR	1.00 PCS	V33	
645	IL30515	T.DIOD.11V/1,5kW 1,5KE11A	1.00 PCS	V37	
650	IL30020	ZENER 6,2V/0,5 W ZPD6,2 ITT	1.00 PCS	V39	
655	IL32090	FET N- 0,8A/60V BS170	1.00 PCS	V40	
660	IL30038	ZENER 15V/0,5 W ZPD15 ITT	1.00 PCS	V41	
665	IL31010	DIODE 200mA/75V 1N4148	4.00 PCS	V43-45,53	
	*	V49,51:EI AS/NOT CONNECT			
675	IL32010	TRANSISTOR 0,1A/45V BC547	2.00 PCS	V50,52	
680	IL30108	ZENER 4,7V/1,3 W ZPY4,7 ITT	1.00 PCS	V54	
	*				
690	IL36808	LIN IC AVS1ACP08 ST	1.00 PCS	N1	
695	IL35240	LIN IC UC3844N Unitrode	1.00 PCS	N2	
700	IL36030	OPTOCOUPLER SFH 601G-2	1.00 PCS	N3	
705	IL35175	LIN IC LT1085CP 3A/adj pos	1.00 PCS	N4	
710	IL35130	LIN 1,5A/15V pos LM7815CT	1.00 PCS	N5	
715	IL35160	LIN 1,5A/15V neg LM7915CT	1.00 PCS	N6	
720	IL35195	LIN IC 0,1A/adj TL431CLP	1.00 PCS	N7	
725	IL35210	LIN IC UC3524AN Unitrode	1.00 PCS	N8	
730	IL50145	FUSE 5x20-3,5A-T CSA Schu FSD 0034.39	2.00 PCS	F1,2	CSA
	*				
740	IL48102	CHOKE 2x6,8mH/2A B82724- J2202-N1 Sie	1.00 PCS	L1	
	*	L2: OIKOSULKULANKA/JUMPER			
750	IL46044	CHOKE EF25/IPS91, 4M1837 IPS91	1.00 PCS	L3	
755	IL48002	CHOKE 3,3uH/7A DS4/15 Vogt	2.00 PCS	L4,5	
760	IL41300	FERR.TUBE 2x28B 0562-200	1.00 PCS	L6	
765	IL45564	TRANSF.EF20/DPA01B,4M1922	1.00 PCS	T1	
770	IL45641	TRANS.ETD44/IPS93, 4M3150	1.00 PCS	T2	
	*				
780	IL52630	DEVICE HEADER GSP1.3501.1	1.00 PCS	X1	CSA
785	IL55120	CONNECTOR 6,3 mm PK/S Abiko 12523	2.00 PCS	X2,3	
790	IL55532	CONNECT.2-p/PK 5566-NA Mo Molex	2.00 PCS	X4,5	
795	IL55540	CONNECT.12-p/PK 5566-NA Molex	1.00 PCS	X6	
	*	X7: EI AS/ NOT CONNECTED			
805	IL75951	WIRE 1 AND 2 4J3148.1	2.00 PCS	J1,2	
810	IL75952	WIRE 3 AND 4 4J3149.1	2.00 PCS	J3,4	
815	IL56995	PINCONNECT.2,54mm 40p str	3.00 PIN	J5	
	*	J6-8:EI AS/ NOT CONNECTED			
	*				
830	IL56990	JUMPER PL1U-0,8 Perlos	1.00 PCS	2	
835	IL50352	FUSEHOLD.5x20 3101.0050 FPG5 Schurt	2.00 PCS	3	CSA
840	IL81244	COOLING PLATE 3E 2860 IPS93	1.00 PCS	4	
845	IL81068	COOLING ANGLE 4E 1363.1 664E13630	1.00 PCS	5	
850	IL65210	CLIP TO220 BREAD 56364	10.00 PCS	6	
855	IL65015	GLITT.PL.16x21 TO220 56369 Philips	10.00 PCS	7	
	*	8:RISTIU.RUUVI M2,9x8,TU-			
	*	LEE X1:n MUK,2kpl KÄYT.			
	*	LOPPUKOKOONPANOSSA.			

```
        *          8:2x SCREW M2,9x8 BELONGS
        *          TO X1. 2pcs ARE USED IN
        *          ASSEMBLY
890 IL60905   SCREW       M2,9x6,5 Zn                  6.00 PCS 9
895 IL53500   SILICON COMPOUND  TGAS                   0.00     10
900 IL53455   SPACER    PKR40          Perlos         44.00 PIN 11
905 IL42000   FERRITE BEAD    3B 3,5mm 4330-030-321    4.00 PCS 12
910 IL70100   SERIENUMBER STICKER      5x16,5mm        1.00 PCS 13
915 IL70452   TESTED-label  PDL47                      1.00 PCS 14
920 IL53570   SILICON GLUE  ELASTOSIL   E41            0.00     15
-----------------------------------------------------------------------------
```

8. TROUBLESHOOTING AND REPAIR PROCEDURES

1. You must study the working principle and the block diagram.

2. If device blows the fuse, you must measure with a resitormeasurement varistors R4 and R5, diodes V1-V4, capacitors C6, C7 and fets V9, V13. Check the line voltage selectors triac V5.

3. If there is no short-circuit, check control IC N2 and feedback ICs N3, N7.

4. If all outputs have gone, check voltage over C8 (≥ 280Vdc). If isn,t, check the circuits of supply voltage.

5. The short-circuit of output can be checked by feed voltage from a current limit power supply. When a output loads the power supply, check the capacitors, diodes and transzorbdiodes of the output.

6. If +5,1V, ±15V are gone or are too high, then a problem is in the linear regulators or ambient components of the regulators. Check transzorbdiodes V27, V43 and V44.

7. When the output 6,8-8,0V has gone, check DC/DC-converter IC N8, transistor V33 and diode V36. Check also V37, V40, V42 and V46.

Section 10

Wiring diagrams

Wiring diagrams

Contents

1) Only in Multiskan MS
2) Only in Agglutination option
3) Only in Multiskan RC

Muutos nro	Pvm/muutt.	Pvm/tark.	Pvm/hyv.	Viite	Versio	Muutos

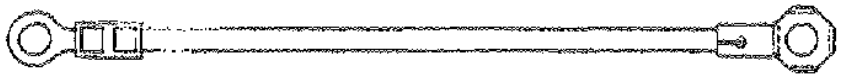

Yleistoleranssi: SFS 4011 hieno ☐ keski ☐ karkea ☐

Aine	Käsittely

Piirt.	08.10.87 PM	Proto ☐ 0-sarja ☐ Tuotanto ☐		Sunde
Tark.	12.11.87	Tuote MCC / 340		
Hyv.	12.11.87			
EFLAB OY		Nimi Track cover grounding wire	Koodi 230 4910	
			Piir.no 347-02-J	

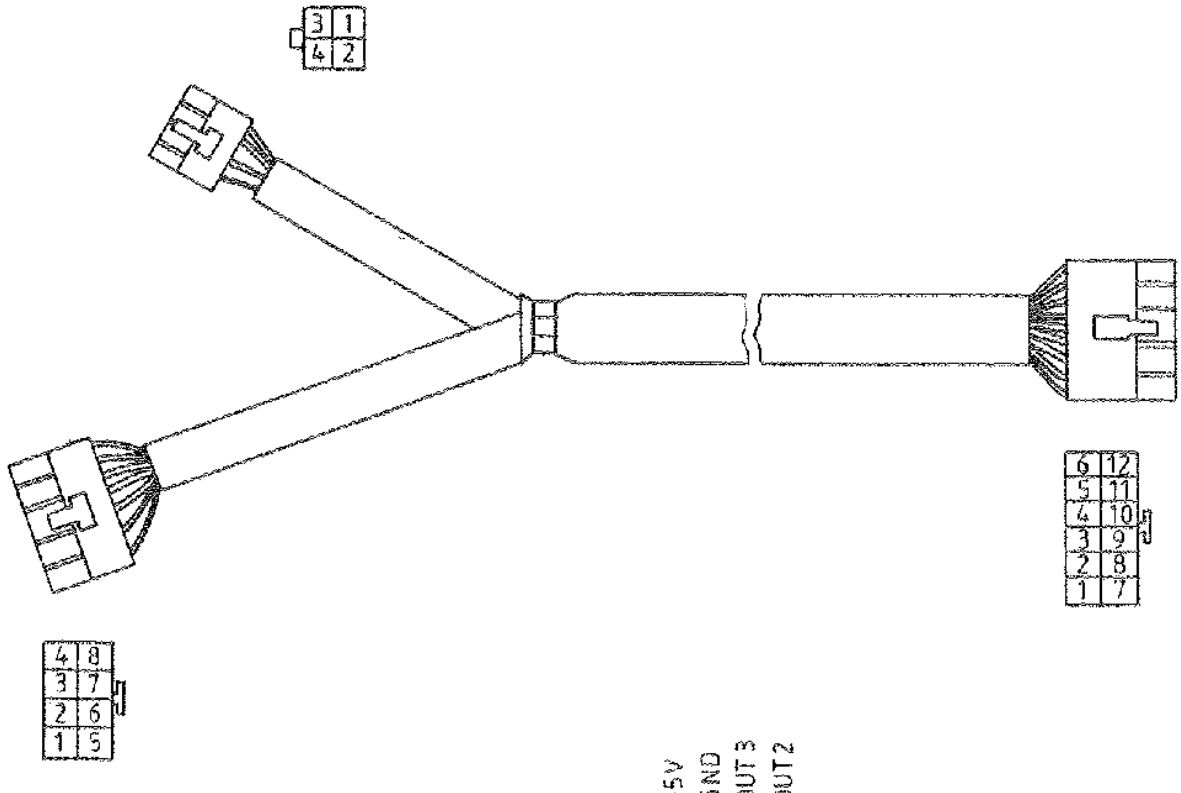

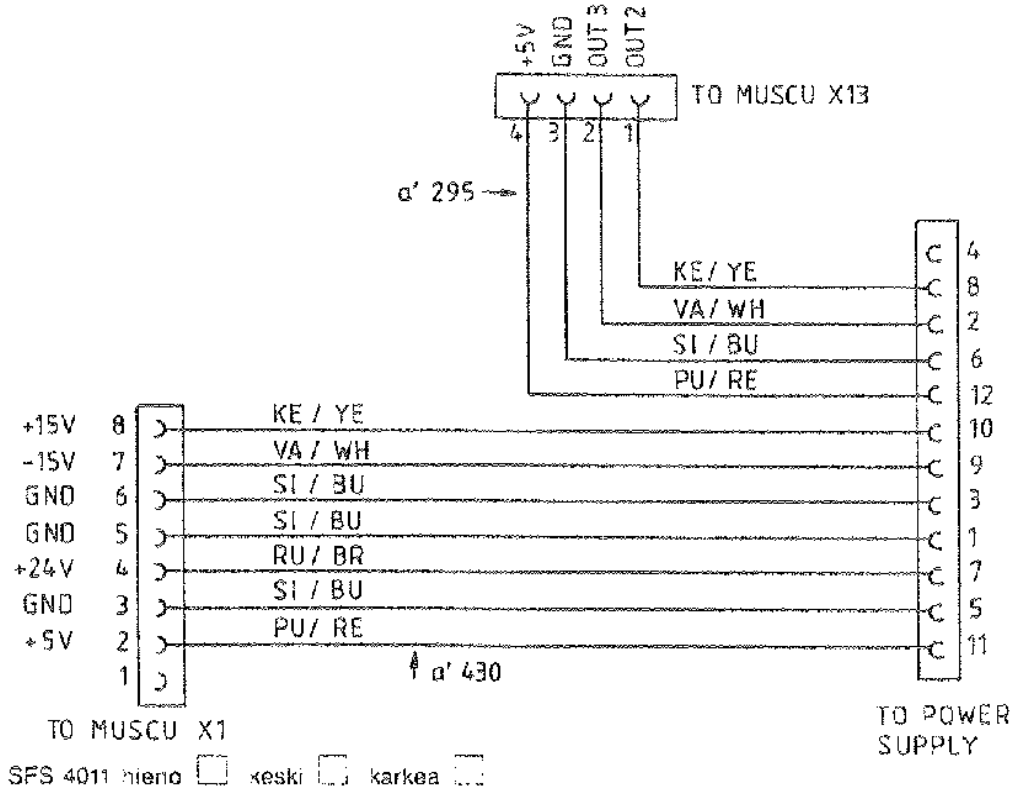

Yleistoleranssi: SFS 4011 hieno ☐ keski ☐ karkea ☐

Aine		Käsittely	
Piirt. 08.10.87 PM	Proto ☐ 0-sarja ☐ Tuotanto ☐		Suhde
Tark. 12.11.87	Tuote MCC / 340		
Hyv. 12.11.87			
EFLAB OY	Nimi Power cable	Koodi 230 4950	
		Piir.no 347-03-1	

Muutos n:o	Pvm/muutt.	Pvm/tark.	Pvm/hyv.	Viite	Versio	Muutos

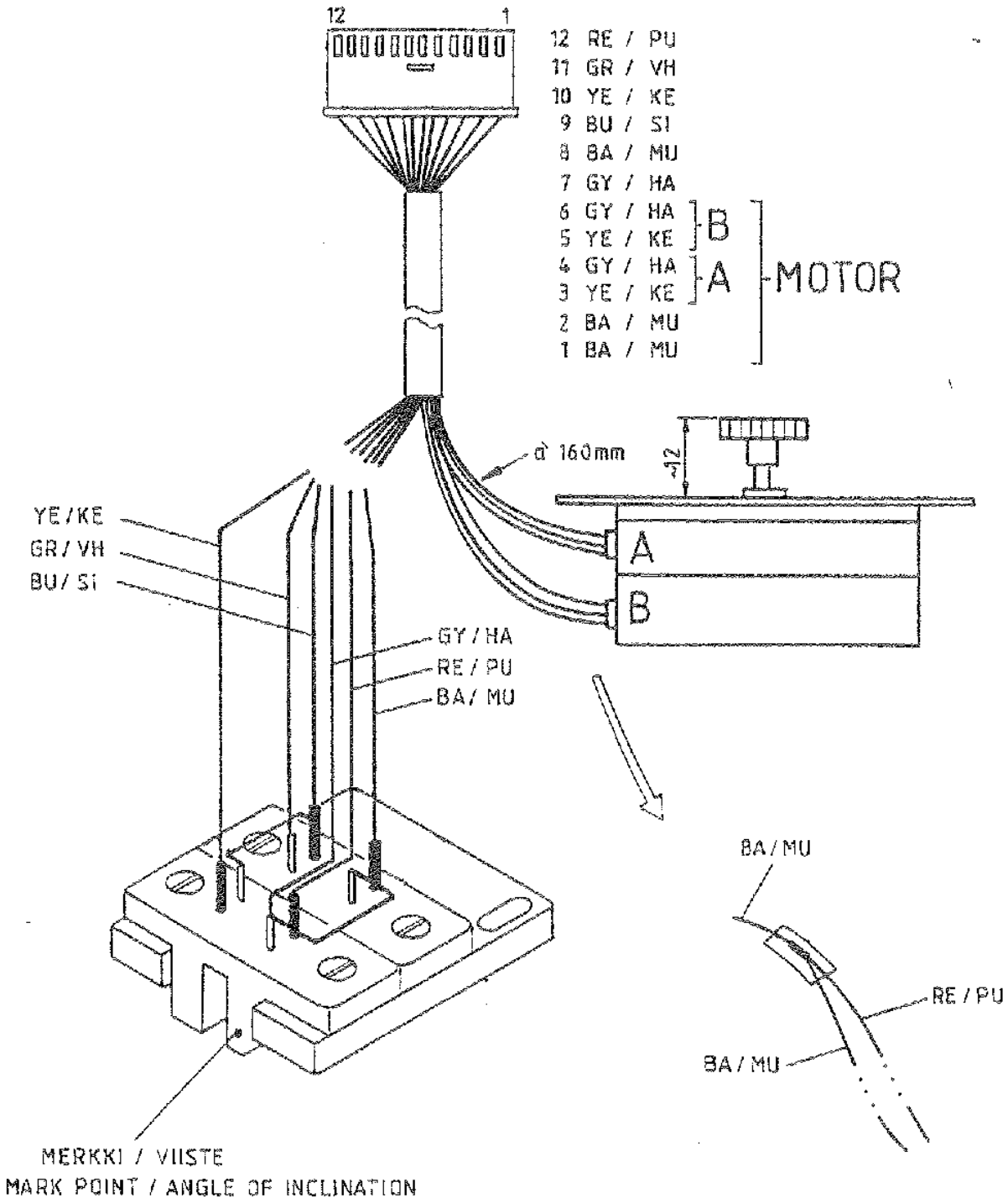

Yleistoleranssi: SFS 4011 hieno ☐ keski ☐ karkea ☐

Aine		Käsittely		
Piirt.	08.10.87 PM	Proto ☐ 0-sarja ☐ Tuotanto ☐		Suhde
Tark.	30.10.87	Tuote MCC / 340		
Hyv.	30.10.87			
EFLAB OY		Nimi Filter motor cable	Koodi 210 3940	
			Piir.no 347-04-1	

Muutos nro	Pvm/muutt.	Pvm/tark.	Pvm/hyv.	Viite	Versio	Muutos

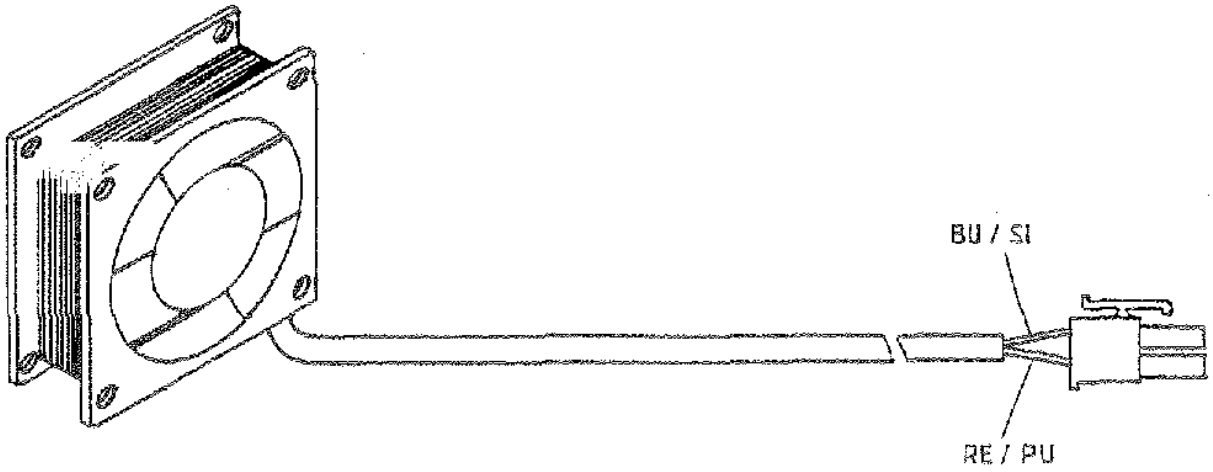

Yleistoleranssi: SFS 4011 hieno ☐ keski ☐ karkea ☐

Aine		Käsittely	
Piirt. 12.10.87 PM	Proto ☐ 0-sarja ☐ Tuotanto ☐		Sunde
Tark. 12.11.87	Tuote MCC / 340		
Hyv. 12.11.87			
EFLAB OY	Nimi Fan assembly	Koodi 2103900	
		Piir.no 347-06-J	

Muutos n:o	Pvm/muutt.	Pvm/tark.	Pvm/hyv.	Viite	Versio	Muutos

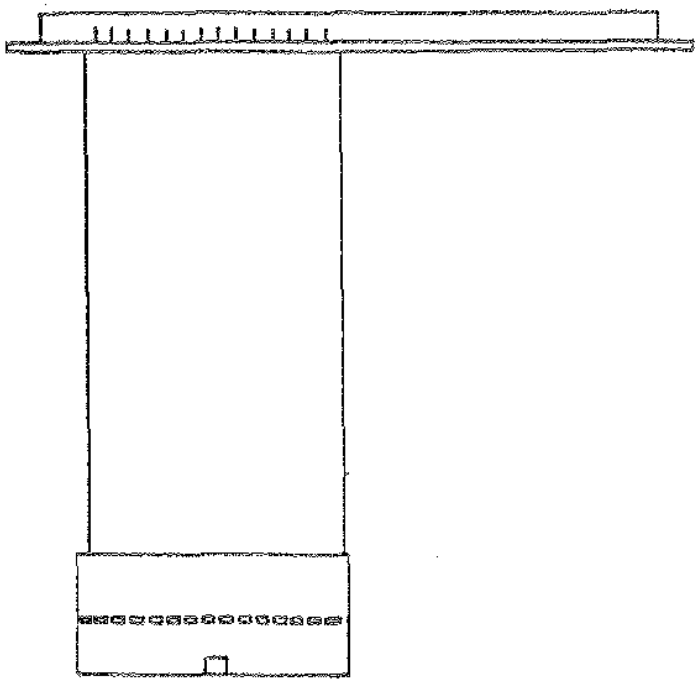

Yleistoleranssi: SFS 4011 hieno ☐ keski ☐ karkea ☐

Aine	Käsittely

Piir.	02.12.87 PM	Proto ☐ 0-sarja ☐ Tuotanto ☐		Suhde
Tark.	4.1.88	Tuote MCC 340		
Hyv.	4.1.88			
EFLAB OY		Nimi LCD display	Koodi 129 0480	
			Piir.no 347-09-J	

D C B A

Muutos n:o	Pvm/muutt.	Pvm/tark.	Pvm/hyv.	Viite	Versio	Muutos
808	11.5.89 PHM	11.5.89 MK	11.5.89 KS		01	Lis. vedonpoistaja
—	10.9.90 PHM	—	10.9.90 JTU		1A	Lis. pos. 4

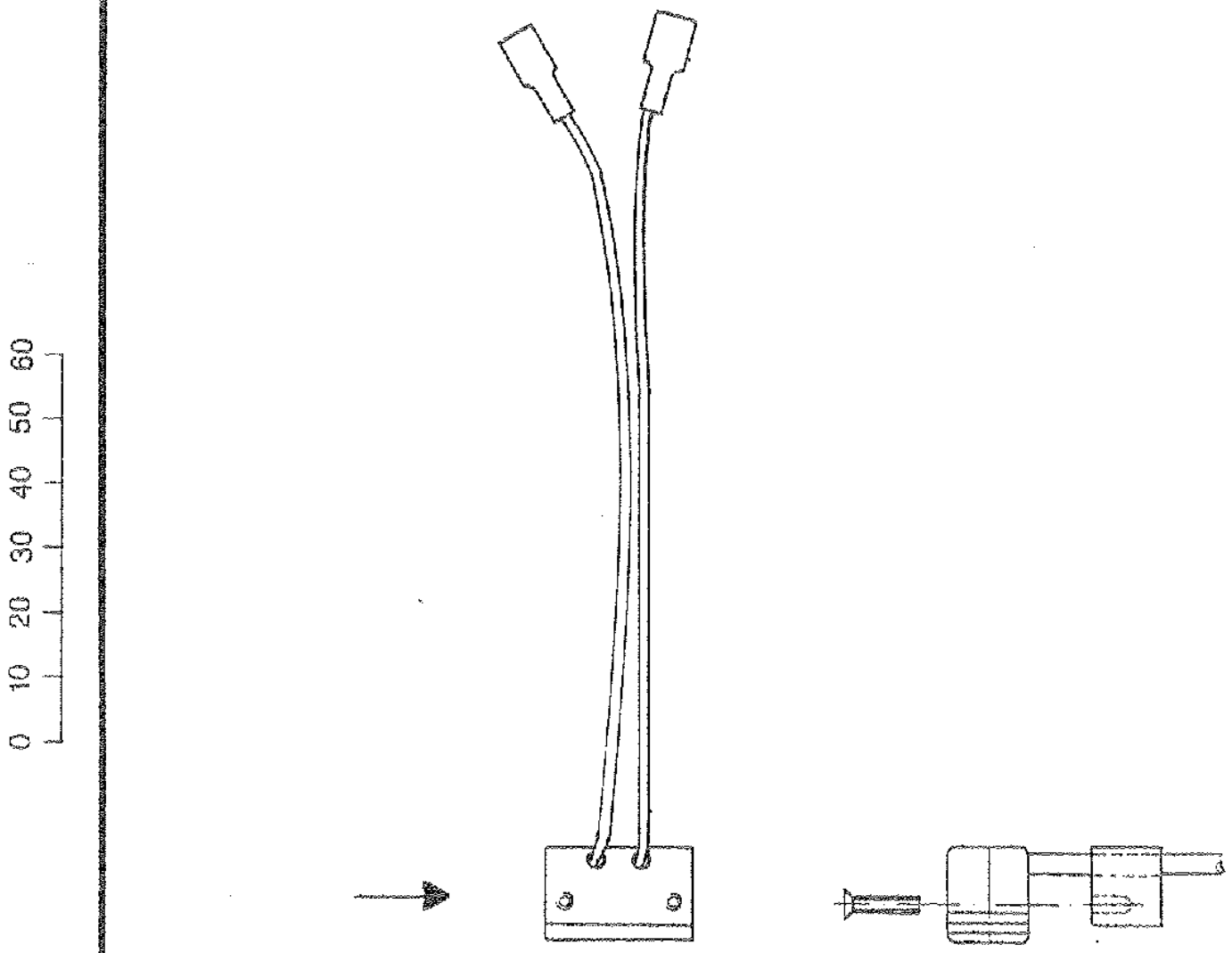

Yleistoleranssi: SFS 4011 hieno ☐ keski ☐ karkea ☐

Aine		Käsittely		
Piirt.	05.11.87 PM	Proto ☐ 0-sarja ☐ Tuotanto ☐		Suhde
Tark.	12.11.87 MK	Tuote MCC 340		
Hyv.	12.11.87 MK			
EFLA OY		Nimi Lamp cable	Koodi 230 4900	
			Piir.no 347-13-1-1A	

Muutos n:o	Pvm/muutt.	Pvm/tark.	Pvm/hyv.	Viite	Versio	Muutos
657	17.06.88 TM	[illegible]	[illegible]		01	

1 BL/MU
2 RE/PU

Yleistoleranssi. SFS 4011 hieno ☐ keski ☐ karkea ☐

Aine		Käsittely	
Piirt. 14.12.87 PM	Proto ☐ 0-sarja ☐ Tuotanto ☐		Sunde
Tark. 21.12.87 AKe	Tuote MCC / 340		
Hyv. 7.1.88 [illegible]			
EFLAB OY	Nimi CHOPT – Power	Koodi 230 5030	
		Piirno 347-14-J-01	

Muutos n:o	Pvm/muutt.	Pvm/tark.	Pvm/hyv.	Viite	Versio	Muutos
583	06.01.89PHM		6.1.89		01	Pos. 2 pidennetty, min. 20 muistettu

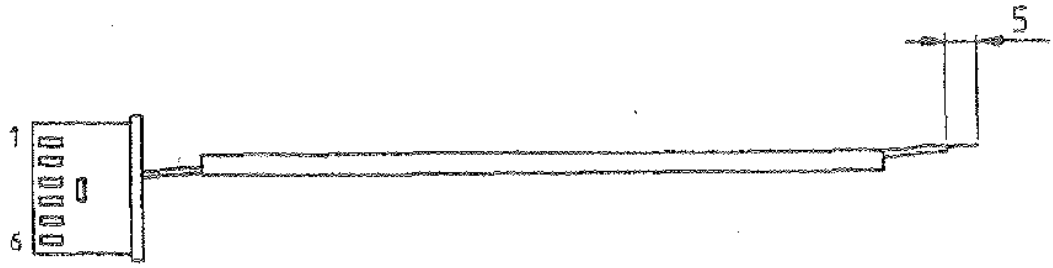

0 10 20 30 40 50 60

1 ——
2 ——
3 YE / KE
4 ——
5 ——
6 ——

Yleistoleranssi: SFS 4011 hieno ☐ keski ☐ karkea ☐

Aine	Käsittely

Piirt. 14.12.87 PM	Proto ☐ 0-sarja ☐ Tuotanto ☐		Sunde
Tark. 21.12.87 AKa	Tuote MCC / 340		
Hyv. 3.1.88			
EFLAB OY	Nimi CHOPT-MUSCU	Koodi 230 5040	
		Piir.no 347-17-J-01	

Muutos n:o	Pvm/muutt.	Pvm/tark.	Pvm/hyv	Viite	Versio	Muutos
657	17.06.88 TM	1.7.88 AK	1.7.88 [illegible]		01	

1 RE/PU
2 BL/SI

Yleistoleranssi SFS 4011 hieno ☐ keski ☐ karkea ☐

Aine		Käsittely	
Piirt. 16.12.87 PM	Proto ☐ 0-sarja ☐ Tuotanto ☐		Suhde
Tark. 21.12.87 AK	Tuote MCC 340		
Hyv 7.1.88 [illegible]			
EFLAB OY	Nimi CHOPT-motor	Koodi 230 5050	
		Piirno 347 16-J-01	

Yleistoleranssi: SFS 4011 keski

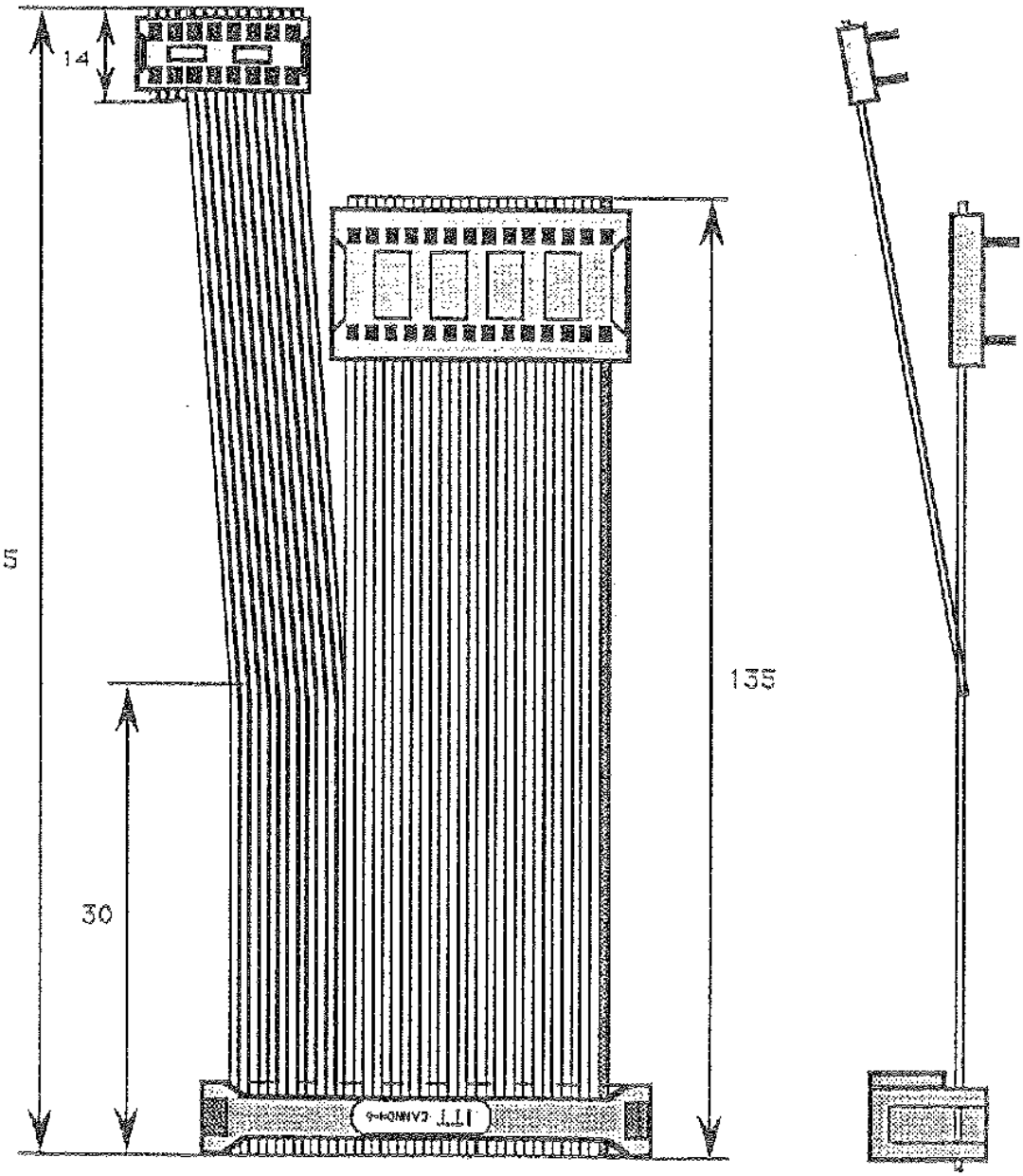

☐ proto ☐ 0-sarja ☒ tuotanto

Piirt. KH								
	Versio	01						
	Laat.	1.8.90 KH						
	Tarx.	2.8.90 KH						
	Hyv.	JTO						
	H.pvm.	6.8.90						

MUSCU-MUSME	Piir.koko A4	Suhde Z	Sivu 1/1	Labsystems
Wiring diagram	Koodi 2303260		Piir.no 349-01 J-01	

Muutos	Pvm.	Muuttanut	Hyv.

Yleistoleranssit	Mittakaava	Tuote	Liittyy	
SFS 4011 karkea	2:1	MULTISKAN MULTISOFT	VETOKON. YHD.	Track motor grounding wire 349-02 J-01

Piirt.	14.11.90 AO		Ent.	Uusi
Suunn.	AO	Labsystems Oy	2303380	
Tark.	22.11.90	Massa		
Hyv.	22.11.90 KH	kg		

CAD: VETOKOMA

Yleistoleranssi: SFS 4011 keski

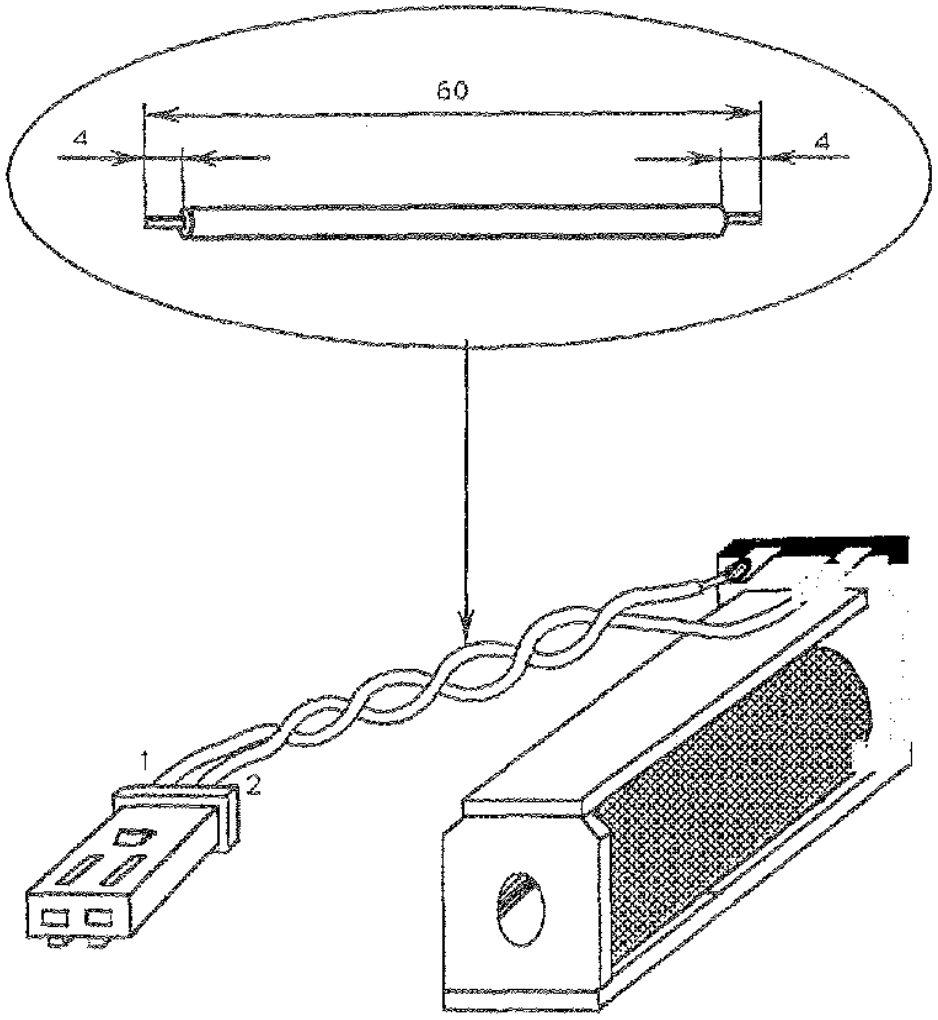

Piirt. KH	Versio	01						
	Laat.	7.11.90 KH						
	Tark.	7.11.90 KH						
	Hyv.	JTC						
	H.pvm.	12.11.90						

MULTISOFT
Solenoid
Wiring diagram

Piir.koko	Suhde	Sivu	
A4	Z	1/1	Labsystems

Koodi	Piir.no
2102460	349-04J-01

☒ proto ☒ O-sarja ☒ tuotanto

Yleistoleranssi: SFS 4011 keskl

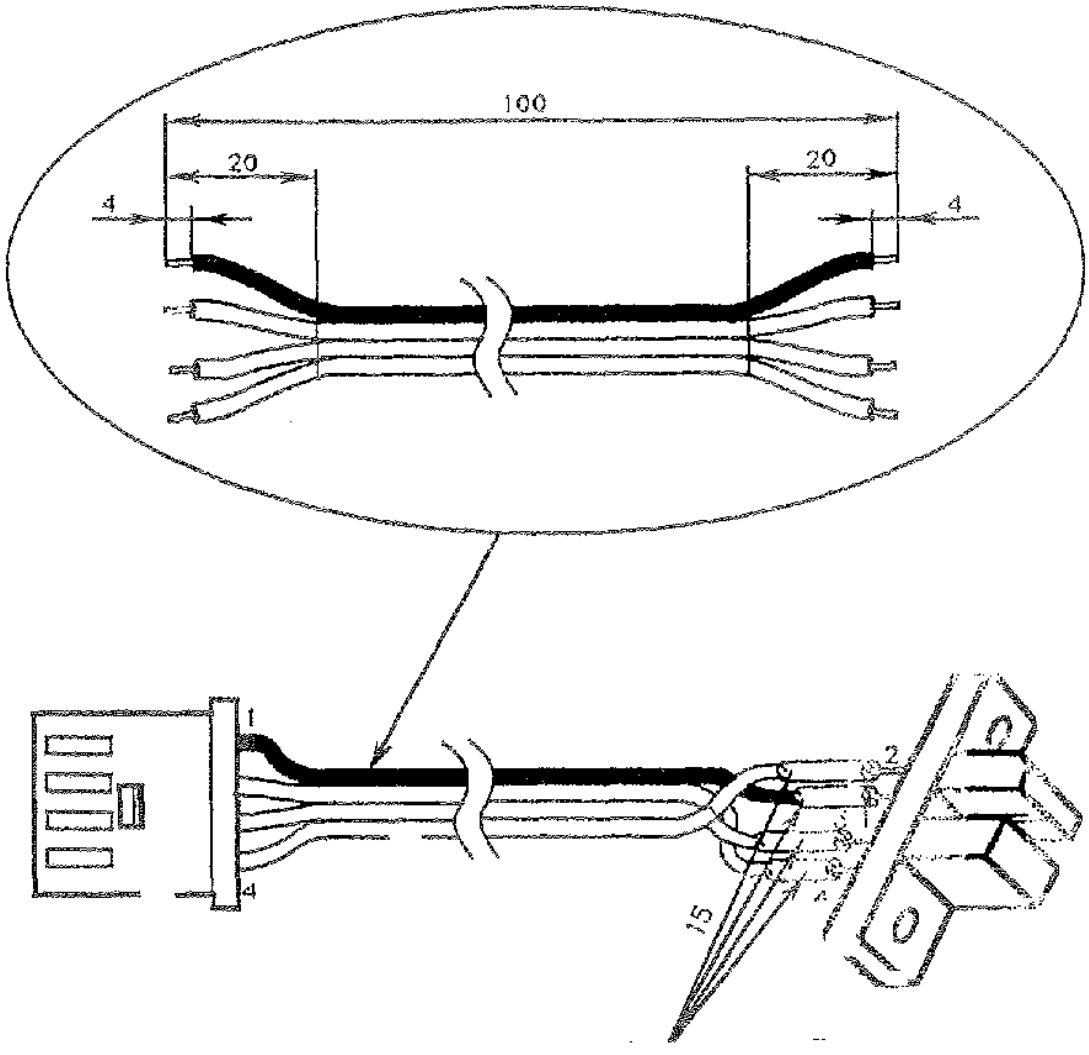

Piirt. KH							
	Versio	01					
	Laat.	7.10.90 KH					
	Tark.	7.10.90 KH					
	Hyv.	JTu					
	H.pvm.	12.11.90					

MULTISOFT

IR-Reader assembly

Wiring diagram

Piir.koko	Sunde	Sivu
A4	Z	1/1

Labsystems

Koodi: 2102510

Piir.no: 349-05 J-01

☒ prototo ☒ 0-sarja ☒ tuotanto

Yleistoleranssi : SFS 4011 keski

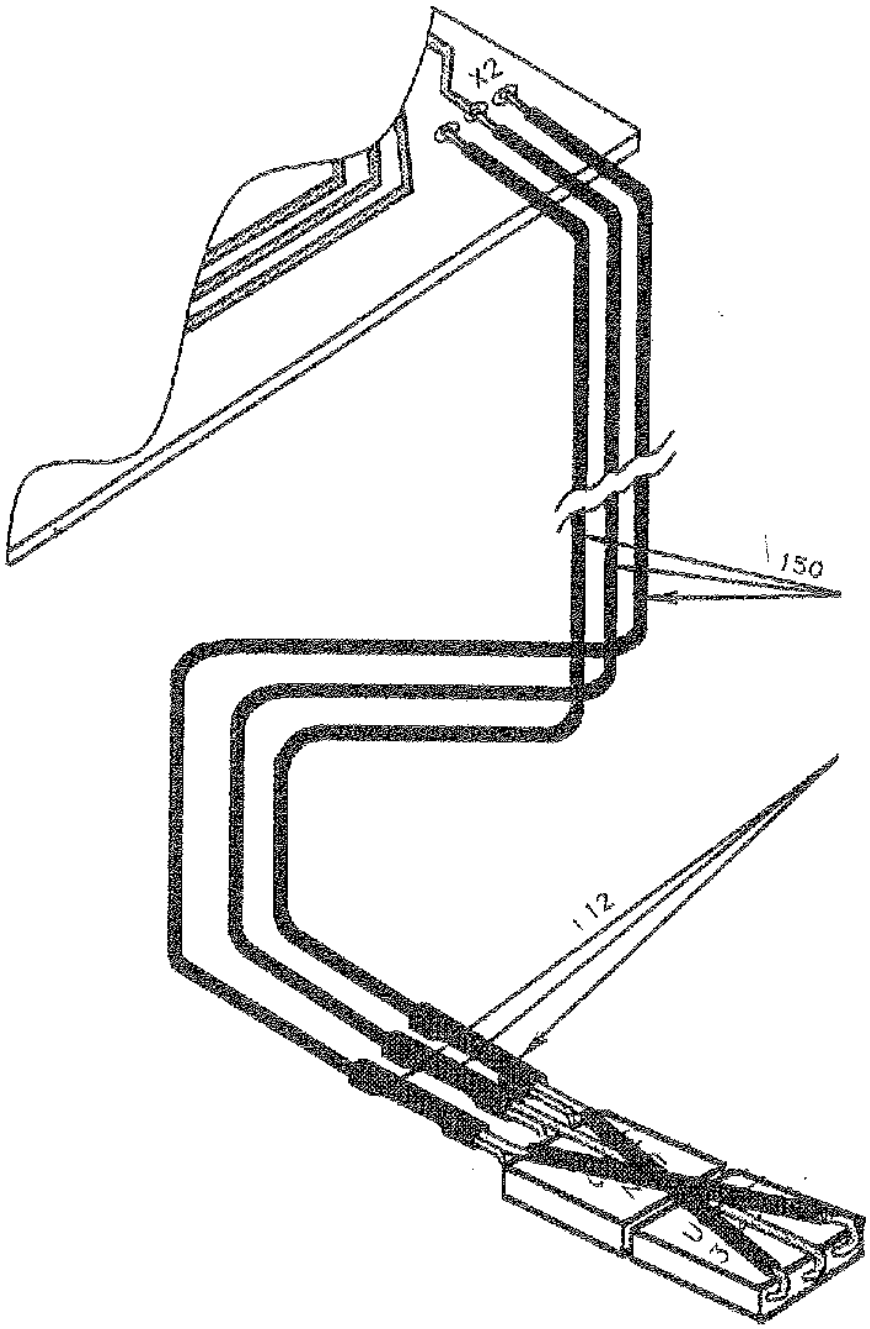

Piir. KII	Versio	01						
	Laat.	21.3.1991 KJH						
	Tark.	6.11.1991 KJH						
	Hyv.	JTG						
	H.pvm.	11.11.91						

Multisoft

Hall sensor assembly

Piir.koko	Sunde	Sivu	
A4	Z	1/1	Labsystems

Koodi	Piir.no
2303580	349-06 J-01

☐ proto ☒ 0-sarja ☒ tuotan.

Yleistoleranssi: SFS 4011 keski

☒ tuotanto

☐ 0-sarja

☐ proto

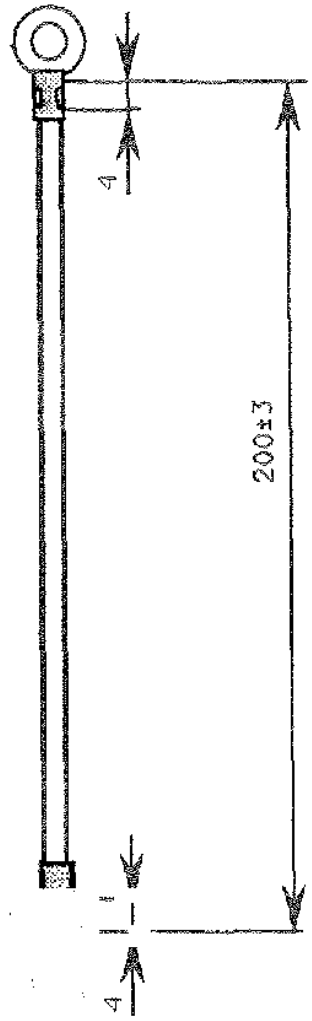

Piirt. IL	Versio	01						
	Piirt.	IL						
	Tark	28.1.94 IL						
	Hyv	28.1.94 HTu						
	H.pvm	28.1.94						

MULTISKAN RC Grounding wire	Piir.koko A4	Sunde Z	Sivu 1/1	Labsystems
	Koodi 2303830			Piir.no 351-01J-01

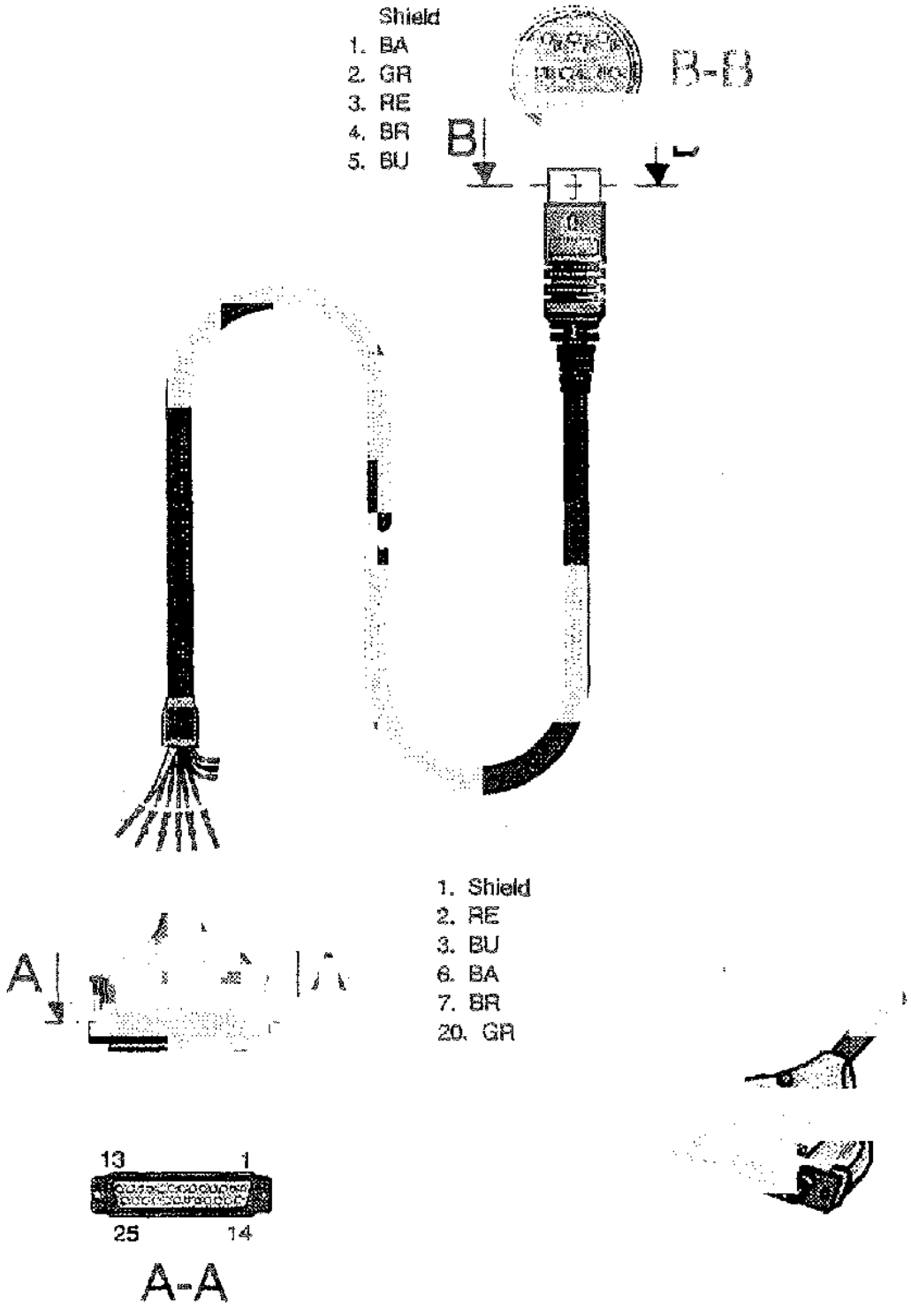

Drawer PHM						
Version	01					
Draw up	28.03.94 PHM					
Inspection	27.3.94					
Approve	29.3.94					

Serial Cable
Multiskan MS-MAC

Document size	Scale	Page
A4	Z	1/1

Labsystems

Code: 2303850

Document number: 352-01J-01

PCT Designer v. 3,1 /SS-01J01.DRW

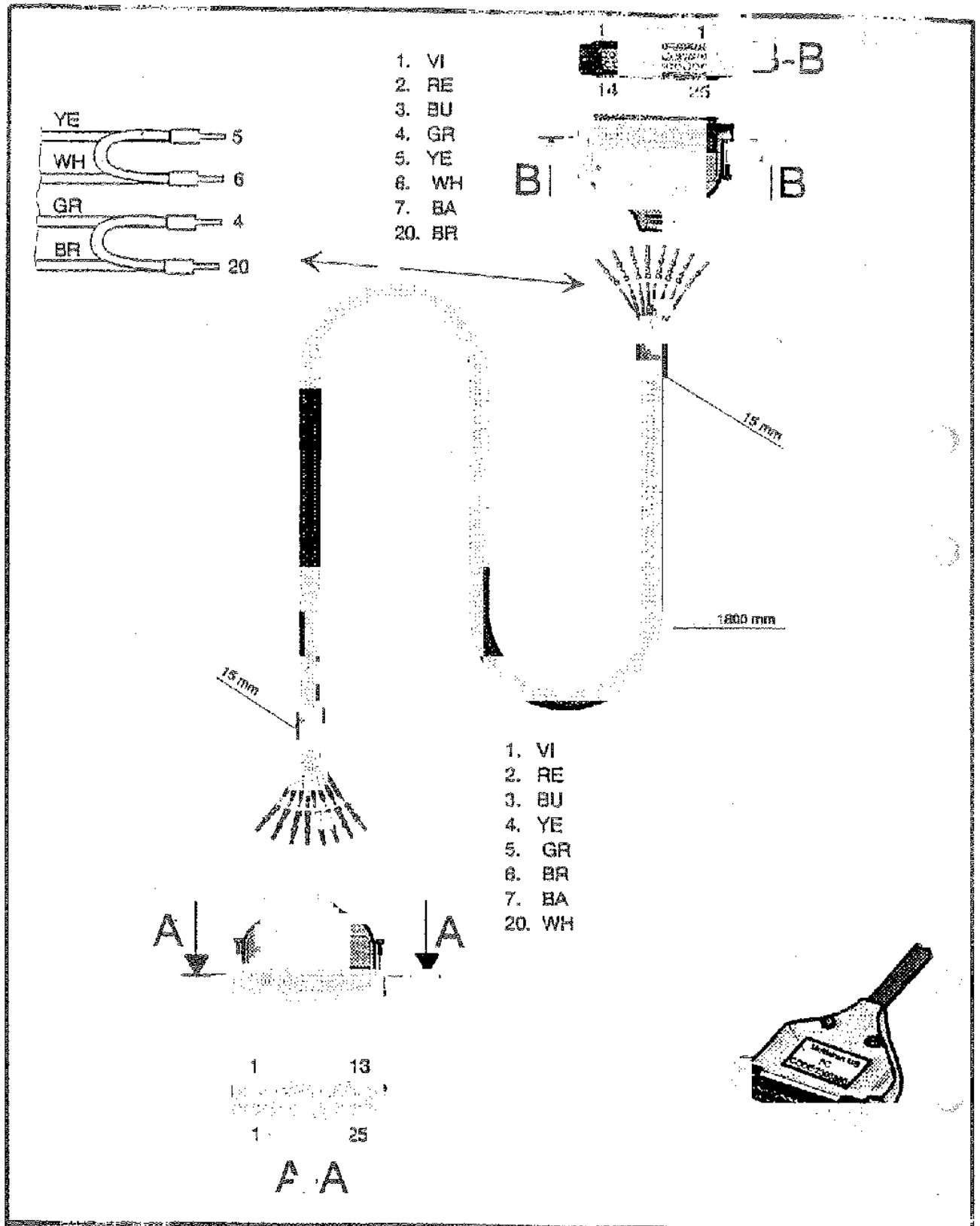

Drawer PHM	Version	01					
	Draw up	29.03.94 PHM					
	Inspection	29.3.94					
	Approve						

Serial Cable Multiskan MS-PC	Document Size A4	Z 1/1	Labsystems
	2303860	Document number 352-02J-01	

PC / Designer v. 3.1 /3520JJ01.DRW

Yleistoleranssi: SFS 4011 Keski

☐ proto ☐ O-sarja ☐ tuotanto

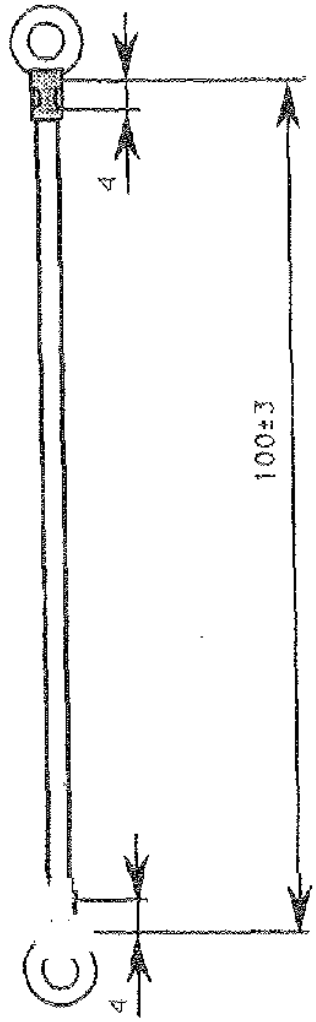

Piir. IL	Versio	01
	Laat.	IL
	Tark.	25.4.94 IL
	Hyv.	HTu
	H.pvm.	3.5.94

MULTISKAN MS

Grounding wire

Piir.koko	Sunde	Sivu
A4	Z	1/1

Labsystems

Koodi: 2303870

Piir.no: 352-03J-01

Muutos n:o	Pvm/muutt.	Pvm/tark.	Pvm/hyv.	Viite	Versio	Muutos

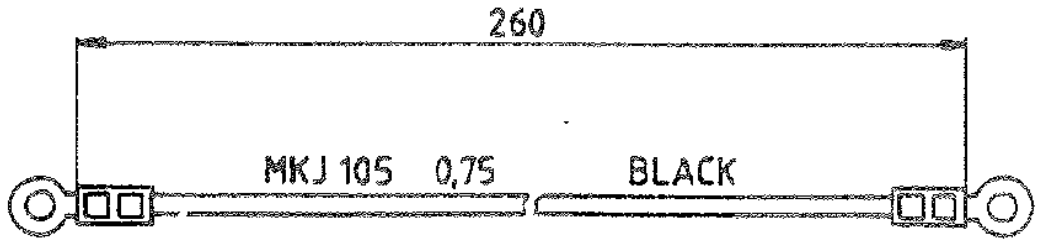

CABLE CLIPS 4mm
A-1543-R 2pcs

FROM MEASURING HEAD TO GROUND

Yleistoleranssi: SFS 4011 hieno ☐ keski ☐ karkea ☐

Aine		Käsittely		
Piirt.	28. 11. 84 PM	Proto ☐ 0-sarja ☒ Tuotanto ☒		Suhde
Tark.	28. 01. 85	Tuote UNISKAN II		
Hyv.	0.4. 01. 85			
SFLABOY		Nimi Grounding wire	Koodi 2304170	
		Wire combination 4	Piir.no 361-04-3	

Kaskad.	Piirtaja	Tarkist.	Hyväksy.	Viite	Versio	Muutos

0 - CONNECTOR 2 pcs

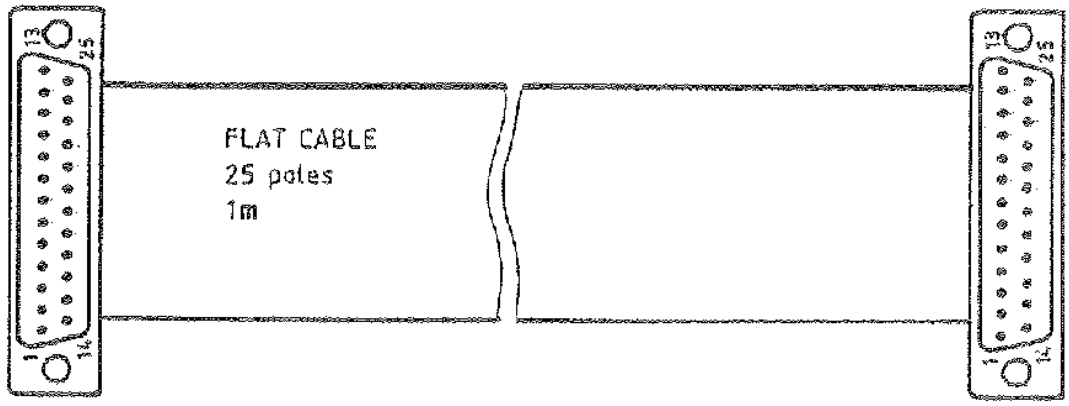

0 10 20 30 40 50 60

Yleistoleranssi: SFS 4011 hieno ☐ keski ☐ karkea ☐

Aine		Käsittely	
Piirt. 11.09.84 PM	Proto ☐ 0-sarja ☐ Tuotanto ☒		Suhde
Tark. 11.09.84	Tuote FLUOROSKAN		
Hyv. 11.09.84			
EFLAB OY	Nimi RS-232-C	Koodi 230 4040	Piir.no 370-18-J

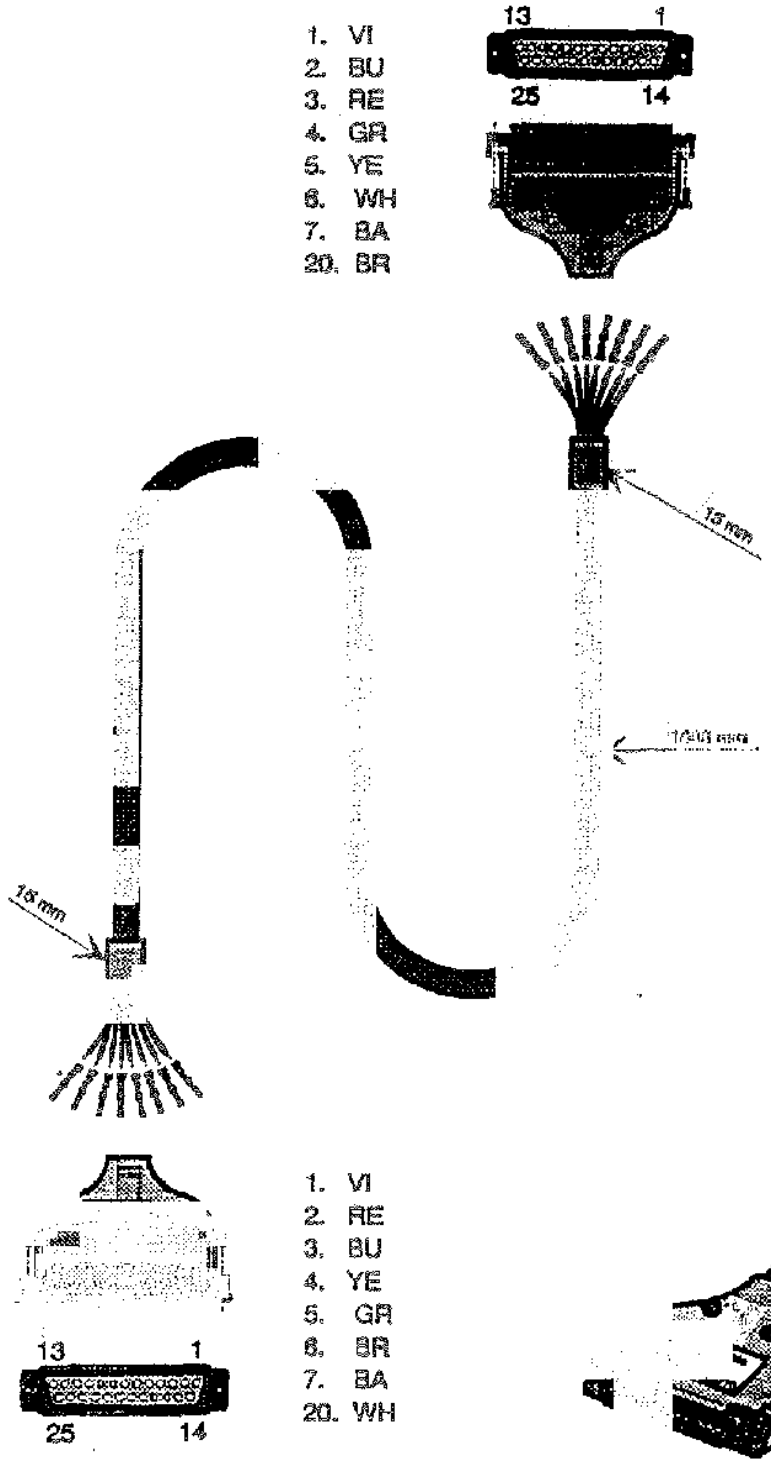

SCH	Version	01	02/1082				
	Draw up	02.04.93 PHM	93.12.17 KH				
Drawer	Inspection	10.6.93 JTu	93.12.27 KH				
	Approve	11.6.93 AKa	93.12.99 [illegible]				

SERIAL CABLE PC

Format	Scale	Page	
A4	Z	1/1	Labsystems

Case	Drawing number
2303760	1400-25 J-02

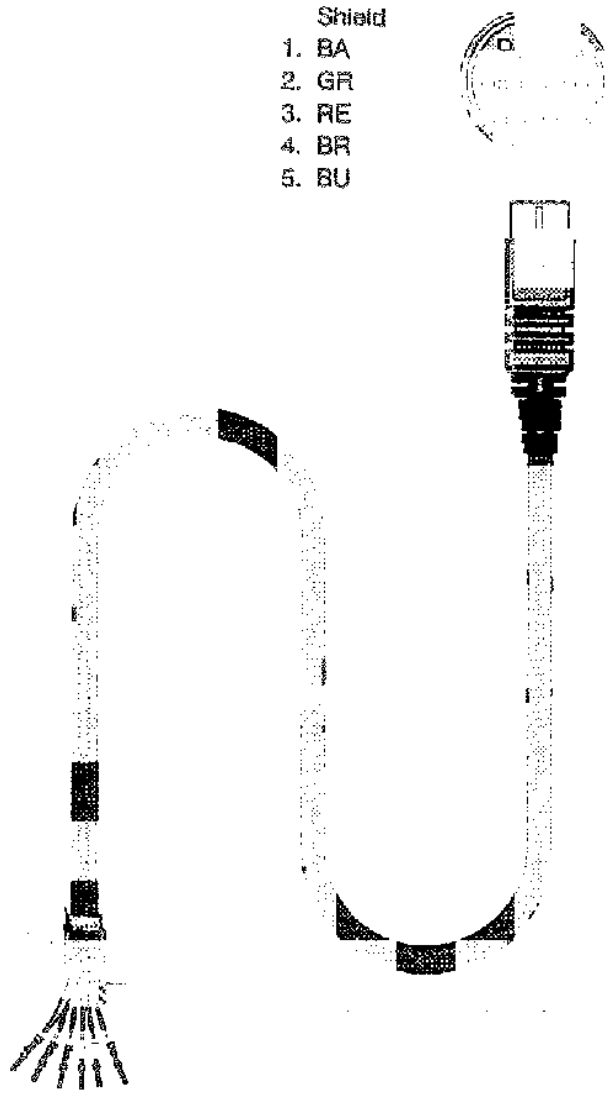

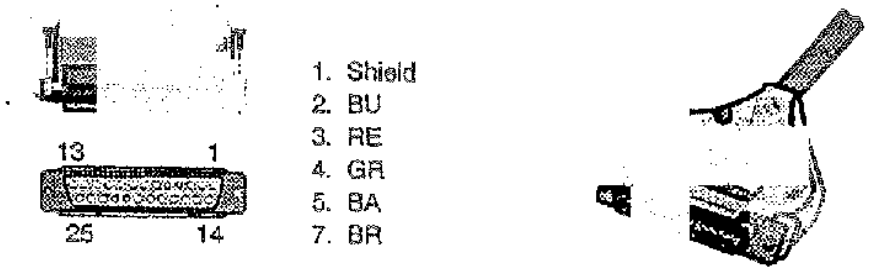

Drawer KH			
Version	01	02/1081	
Draw up	19.5.93 PHM	93.12.17 KH	
Inspection	10.6.93 JTu	94.03.31	
Approve	11.6.93 AKa	2/3 94	

SERIAL CABLE MAC

Document Size	Scale	Page
A4	Z	1/1

Labsystems

Code: 2303770

Document number: 1400-26 J-02

PG / Designer v. 3.1 /1400-26.JL.DRW / KH

Section 11

Spare parts

MULTISKAN RC/MS/EX

Spare parts

Contents

SUBJECT *PAGE*

RC MAIN PARTS

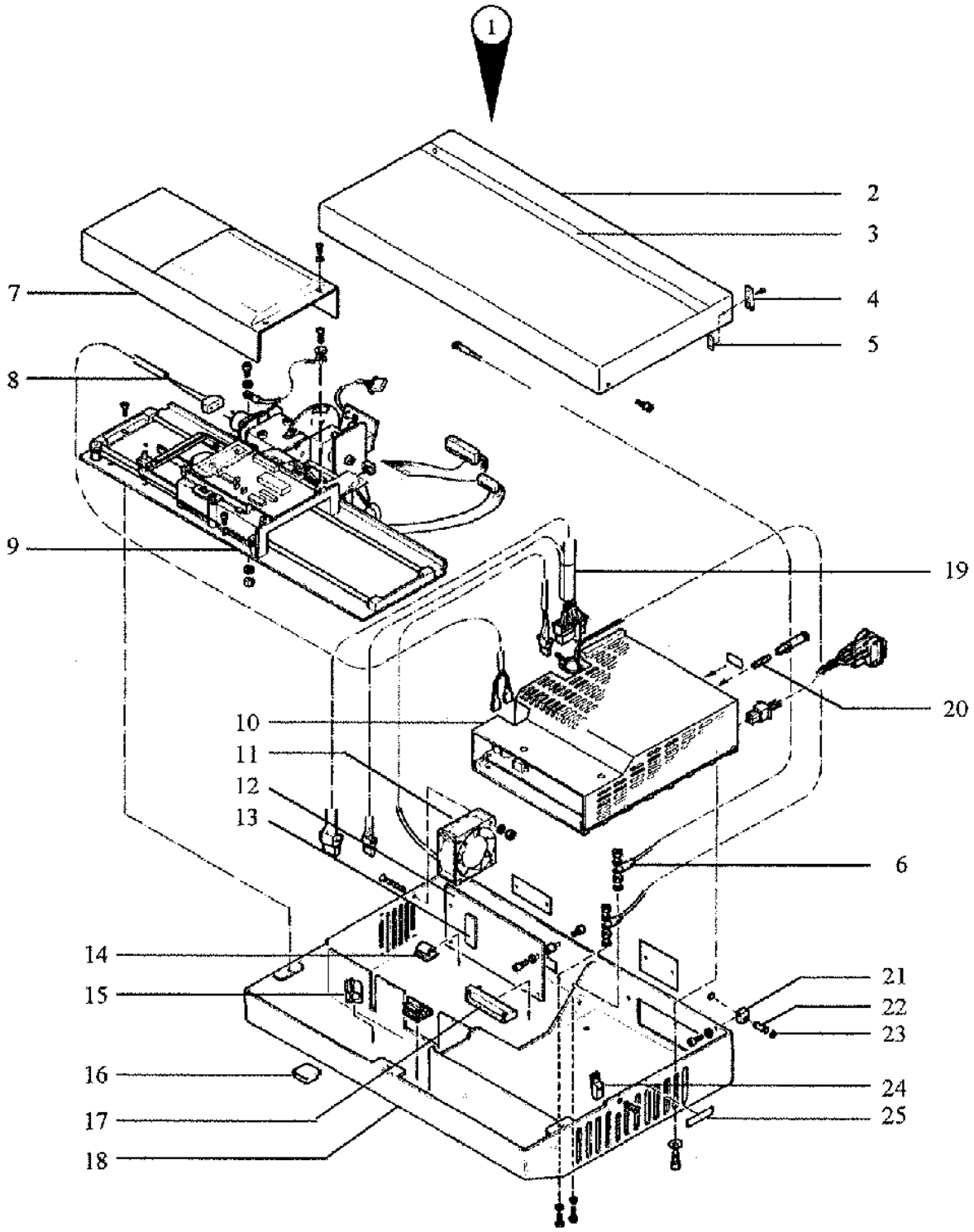

Spare parts

RC main parts

POS.	ITEM		CAT.
1.	RC top cover assembly	Incl. items 2 - 6	24071240
2.	Top cover RC	P.O. 1	11180680
3.	Front panel RC	P.O. 1	1527720
4.	Upper hinge	P.O. 1	1044831
5.	Nut plate	P.O. 1	1123170
6.	Ground wire	P.O. 1	2303830
7.	Track cover (green)		2806021
8.	Lamp cable		2304900
9.	Track plate assembly	See page 10	2102810
10.	Power supply unit SR924100		2103911
11.	Fan assembly		2103900
12.	Pcb MUSCU-RC-01		2004150
13.	Program set MUSCURC		13677500
14.	Cable holder		0500520
15.	Cable holder		0500780
16.	Rubber feet		1090050
17.	Cable holder		0500710
18.	Main frame		1116624
29.	Power supply cable		2304950
20.	Fuse 3.5 A slow 5x20		1210950
21.	Lower hinge piece		1044841
22.	Hinge pin		11070120
23.	Locking ring 2.3 Z		0222180
24.	Cover fastening piece		11271340
25.	"Warning" label		1115530

MS/EX MAIN PARTS

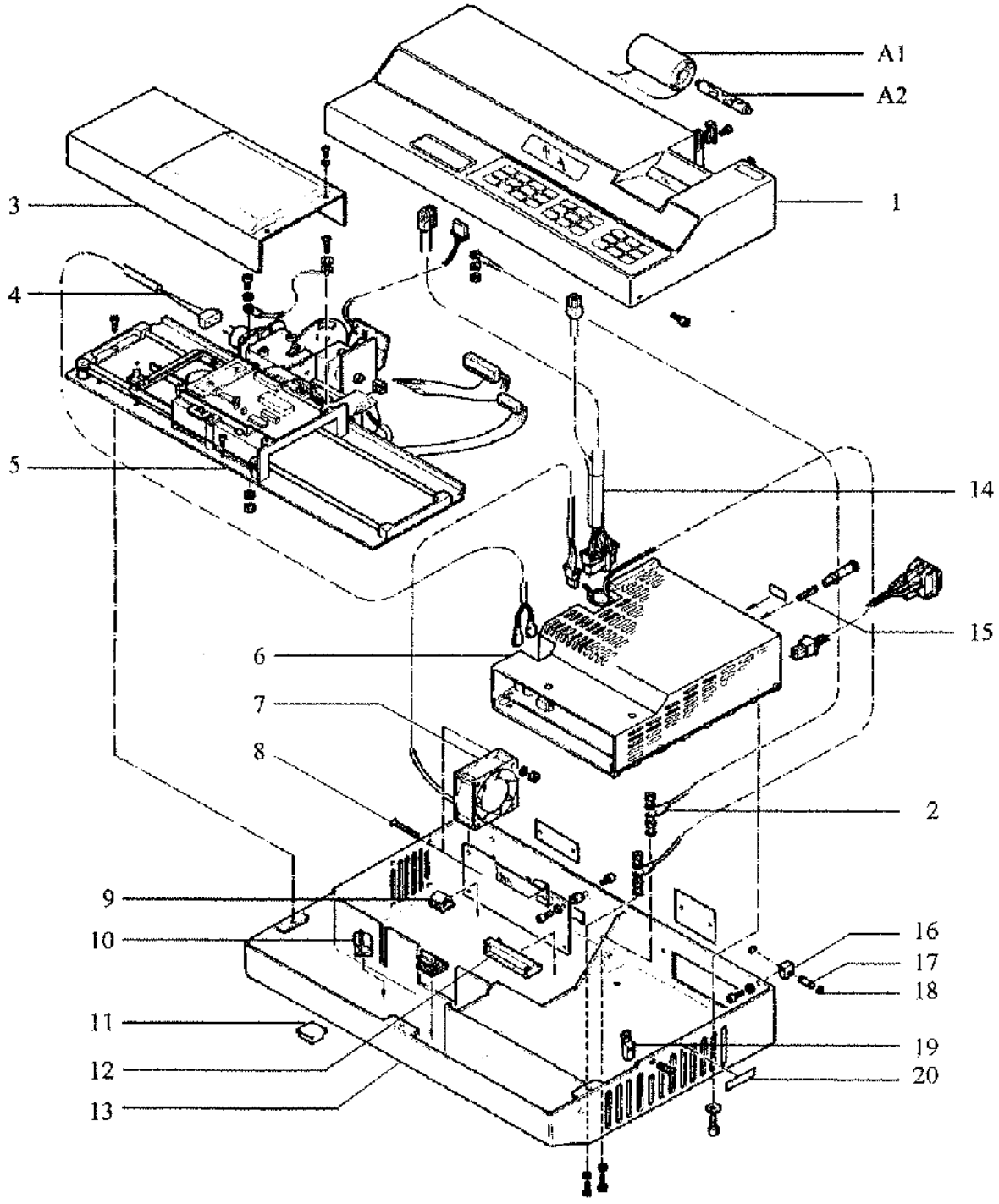

Spare parts

MS/EX main parts

POS.	ITEM		CAT.
1.	MS top cover assembly	See page 8	240 71250
	EX top cover assembly	See page 8	240 71930
2.	Ground wire	P.O. 1	230 4170
3.	Track cover (green)		280 6021
4.	Lamp cable		230 4900
5.	Track plate assembly	See page 10	210 2810
6.	Power supply unit SR924100		210 3911
7.	Fan assembly		210 3900
8.	Pcb MUCEN-02		200 3710
9.	Cable holder		050 0520
10.	Cable holder		050 0780
11.	Rubber feet		109 0050
12.	Cable holder		050 0710
13.	Main frame		111 6624
14.	Power supply cable		230 4950
15.	Fuse 3.5A slow 5x20		121 0950
16.	"Ground" label		152 0090
17.	Lower hinge piece		104 4841
18.	Hinge pin		110 70120
19.	Locking ring 2.3 Z		022 2180
20.	Cover fastening piece		112 5690
21.	"Warning" label		111 5530
A.	Printer option	See page 8	
A1.	Paper roll shaft	P.O. A	104 2220
A2.	Thermal paper MTP201/58 mm	P.O. A	160 0510

MS/EX TOP COVER ASSEMBLY

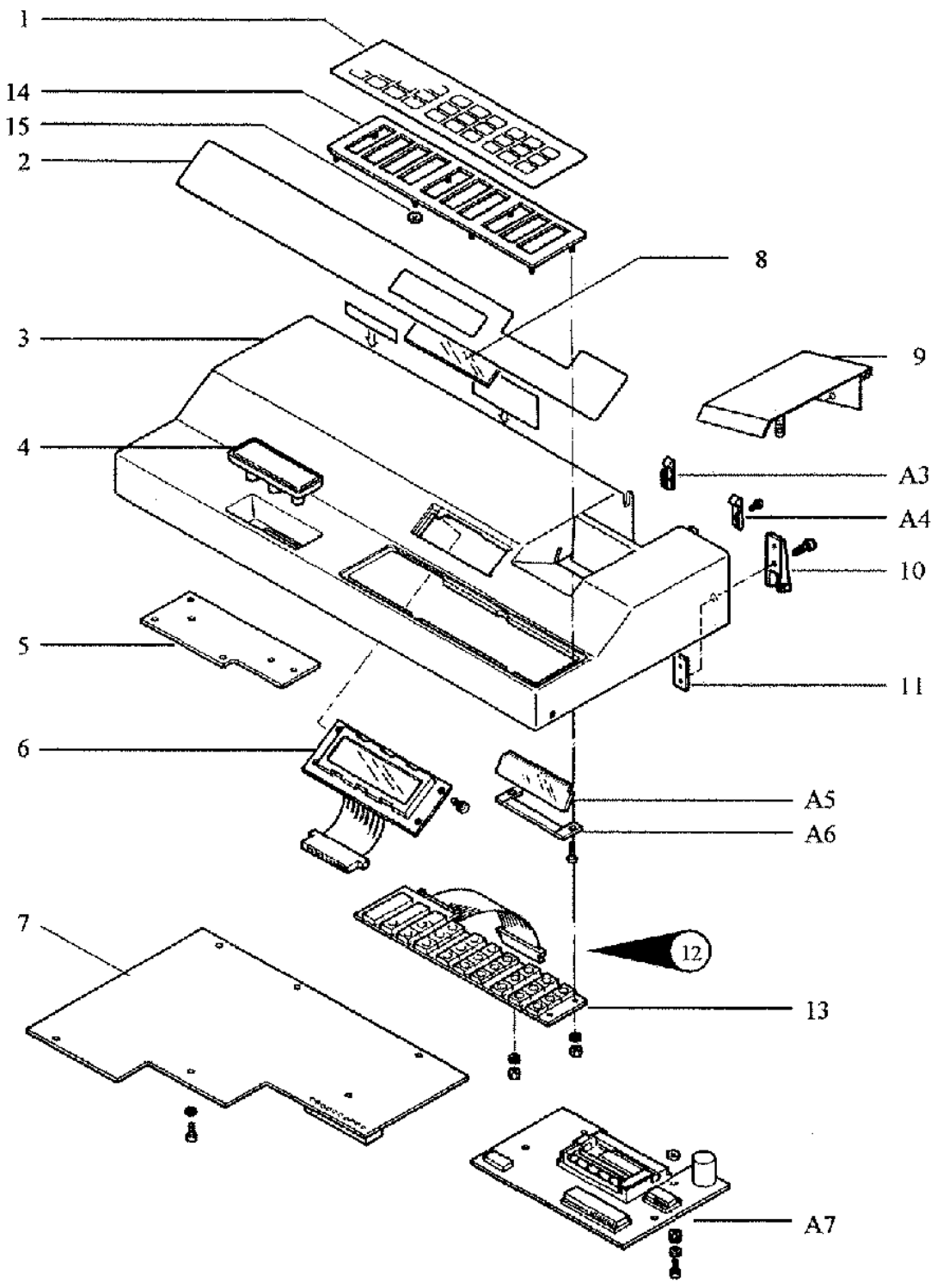

Spare parts

MS/EX top cover assembly

POS.	ITEM		CAT.	
1.	Keyboard film MS		120 5310	
	Keyboard film EX		120 5490	
2.	Front panel MS		152 7730	
	Front panel EX		152 80000	
3.	Top cover, white		104 6375	
4.	Covering plate		104 6363	
5.	Pcb MUSME-01 (w/o EPROMs)		200 2820	1)
	Pcb MUSME-02 (w/o EPROMs)		200 4370	2)
6.	LCD unit		230 5380	
7.	Pcb MUSCU2A (w/o EPROMs)		200 3561	1)
	Pcb MUSCU-03 (w/o EPROMs)		200 4380	3)
	Pcb MUSCU-04 (w/o EPROMs)		200 4420	4)
8.	Display window		101 1750	
9.	Printer plate		111 6361	
10.	Upper hinge		104 4831	
11.	Nut plate		112 3170	
12.	Keyboard assembly	Incl items 13 - 15	210 3840	
13.	Pcb NAPSU2	P.O. 12	200 3570	
14.	Keyboard support plate	P.O. 12	111 6241	
15.	Spacer	P.O. 12	104 6300	
A.	Printer option	Incl. items A1 - A7		
A1.	Paper roll shaft	See page 5	104 2220	
A2.	Thermal paper MTP201/58 mm	See page 5	160 0510	
A3.	Paper roll retainer, left	P.O. A	104 6350	
A4.	Paper roll retainer, right	P.O. A	104 6351	
A5.	Paper cutter	P.O. A	104 1470	
A6.	Paper guide	P.O. A	101 1360	
A7.	SKANPR12 assembly	P.O. A	240 6061	

1) Multiskan MS to ser. nr. 352010051.

2) Multiskan MS from ser. nr. 352010052 and all Multiskan EX.

3) Multiskan MS from ser. nr. 352010052 to ser. nr. 352011495.

4) Multiskan MS from ser. nr. 352011496 and all Multiskan EX.

TRACK PLATE ASSEMBLY

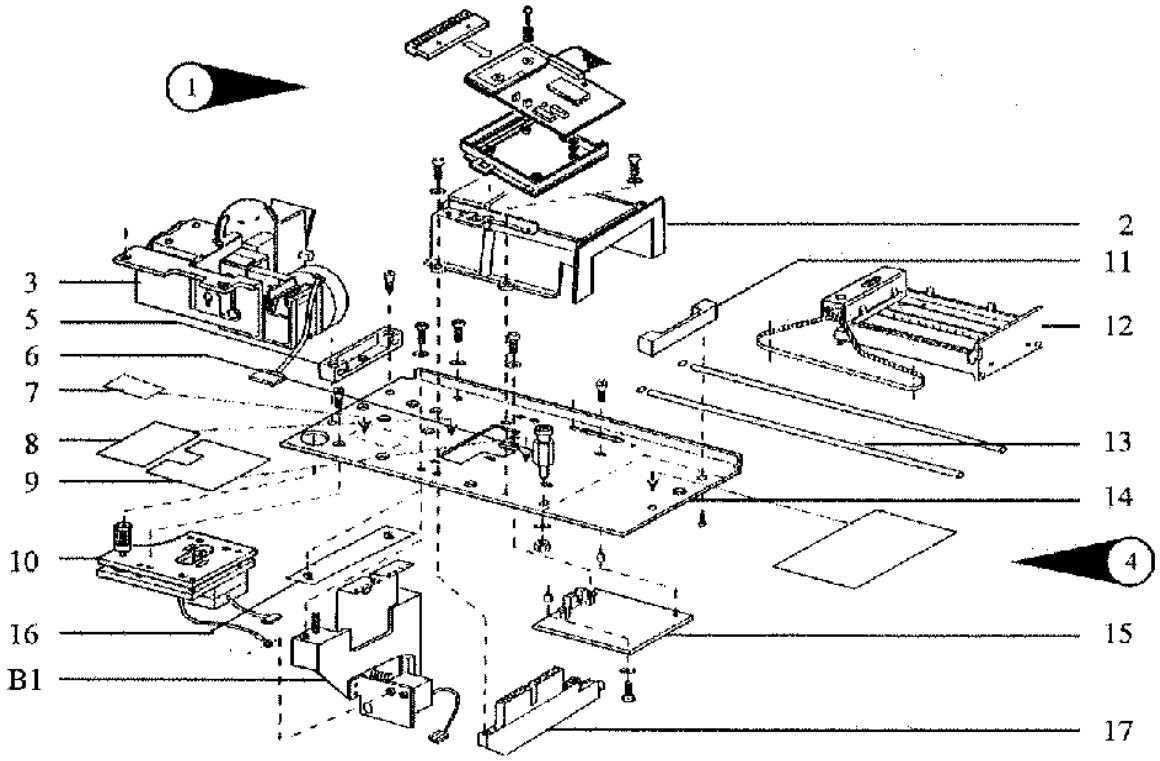

Spare parts

Track plate assembly

POS.	ITEM		CAT.
1.	Detector assembly		210 3992
2.	Detector housing		104 6332
3.	Optic assembly	See page 12	210 3890
4.	Track assembly	Incl. items 5 - 15	210 2820
5.	Transfer rail support (left)	P.O. 4	104 0079
6.	Free wheel	P.O. 4	240 70950
7.	"Caution!" label	P.O. 4	152 0010
8.	Reflection preventing label 1	P.O. 4	101 1120
9.	Reflection preventing label 2	P.O. 4	101 1130
10.	Track motor assembly	P.O. 4	210 2500
11.	Transfer rail support (right)	P.O. 4	104 0076
12.	Carriage assembly	P.O. 4	240 70930
	Tooth belt tensioner	P.O. 12	240 70940
13.	Transfer rail	P.O. 4	110 0000
14.	Track plate	P.O. 4	111 8011
15.	Pcb MOTCU-03	P.O. 4	200 2890
16.	Reflection protector		111 80650
17.	Fibre bundle		240 2151
	Fibre bundle (UV-option)		240 3522
B.	Agglutination option		
B1.	Pin hole shutter assembly	P.O. B	240 70960

OPTIC ASSEMBLY

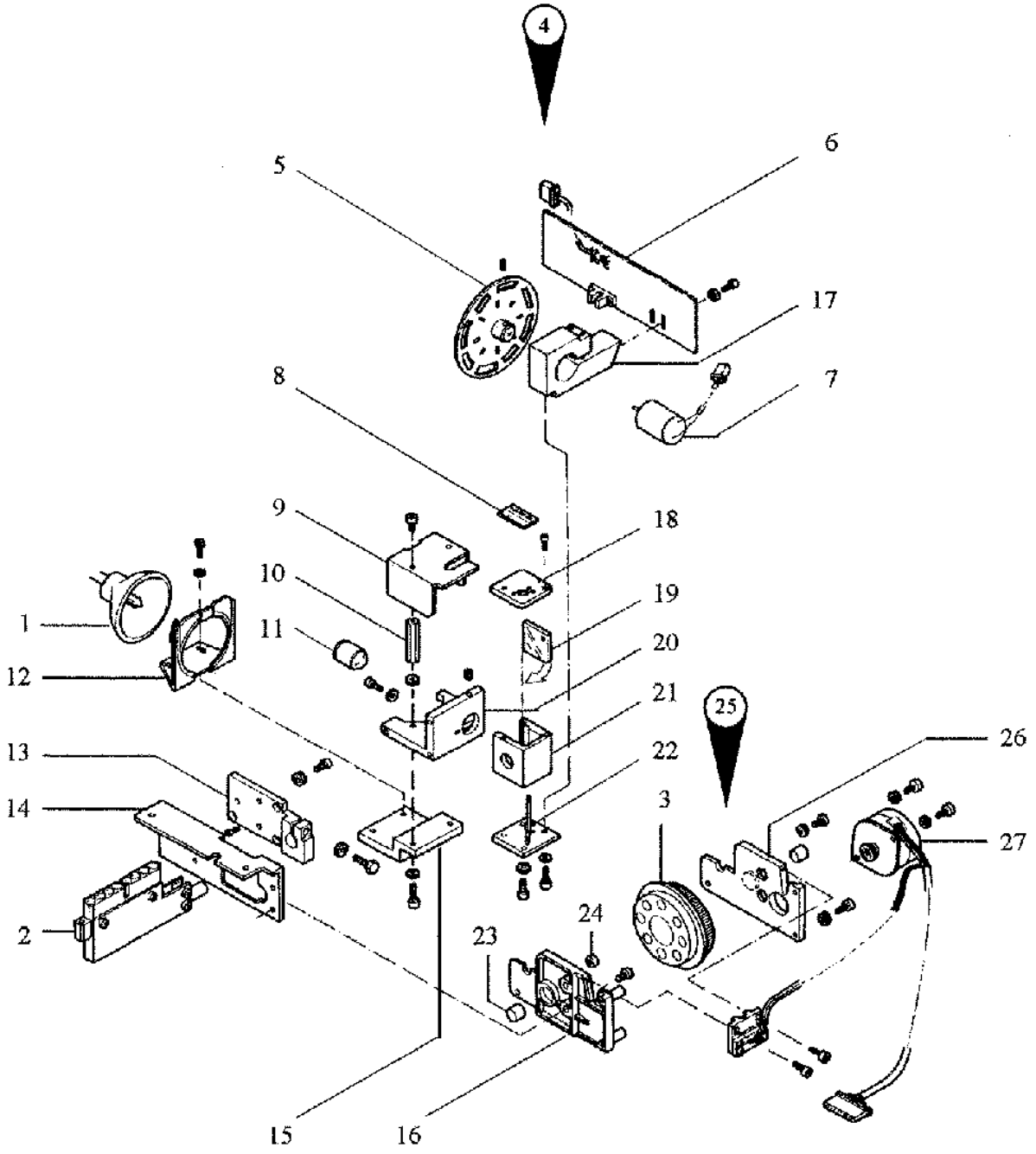

Spare parts

Optic assembly

POS.	ITEM		CAT.
1.	Lamp 8V/50W		240 0620
2.	Fibre bundle	See page 9	
3.	Filter wheel assembly (w/o filters)		240 71230
4.	Optic assembly	Incl. items 5 - 27	210 3890
5.	Chopper wheel assembly	P.O. 4	240 70110
6.	Pcb CHOPT-01	P.O. 4	200 3680
7.	Chopt motor assembly	P.O. 4	210 40000
8.	"WARNING!" label	P.O. 4	111 5450
9.	Light cover	P.O. 4	111 6290
10.	Supporter	P.O. 4	110 70130
11.	Lens assembly	P.O. 4.	240 70100
12.	Lamp frame	P.O. 4	119 0810
13.	Fibre bundle fastener	P.O. 4	112 70350
14.	Main installation plate	P.O. 4	112 70270
15.	Lamp frame installation block	P.O. 4	112 70300
16.	End plate, front	P.O. 4	104 2021
17.	Chopper motor fastener	P.O. 4	112 70430
18.	UV-mirror casing cover	P.O. 4	112 1140
19.	UV-mirror	P.O. 4	143 0003
20.	UV-mirror installation block	P.O. 4	112 70340
21.	UV-mirror casing	P.O. 4	112 70320
22.	UV-mirror spring assembly	P.O. 4	240 2200
23.	Magnet	P.O. 4	129 0040
24.	Ball bearing	P.O. 4	114 0150
25.	Filter slot assembly	Incl. item 26	280 5040
26.	End plate, rear	P.O. 25	104 2011
27.	Filter motor assembly	P.O. 4	210 3940

Spare parts

Electronic components

POS.	ITEM	CAT.	
1.	Fuse 3.5 A	121 0950	
2.	Battery Renata 3V/950mAh	129 05180	
3.	Driver UCN5804B	136 5270	
4.	PAL MUSME-01	136 77150	2)
5.	GAL MUSME-02	136 77690	3)
6.	GAL MUSME-02	136 77691	4)
7.	Programset MUSCURC	13677500	1)
8.	EPROM MUSME PRIMSC1	13677510	2)
9.	EPROM MUSME PRIMSC1	13677650	3)
10.	EPROM MUSME PRIMXC1	13677651	4)
11.	EPROM MUSME TSTMSC1	13677520	2)
12.	EPROM MUSME TSTMSC1	13677660	3)
13.	EPROM MUSME TSTMXC1	13677661	4)
14.	IR-reader, 1 piece	1402030	
B.	Agglutination option		
B1.	EPROM MUSME AGGMSC1	136 77530	2)
B2.	EPROM MUSME AGGMSC1	136 77700	3)
B3.	EPROM MUSME AGGMXC1	136 77701	4)
C.	Cut-off option		
C1.	EPROM MUSME FCTMSC1	280 6110	2)
C2.	EPROM MUSME FCTMSC1	280 6112	3)
C3.	EPROM MUSME FCTMXC1	280 6111	4)
D.	Cubic option		
D1.	EPROM MUSME CUBMSC1	280 6120	2)
D2.	EPROM MUSME CUBMSC1	280 6122	3)
D3.	EPROM MUSME CUBMXC1	280 6121	4)

1) Program set MUSCURC (cat. no. 136 77500) is part of Multiskan RC.

2) Multiskan MS with Primary version 1.5-0

3) Multiskan MS with Primary version 1.8-0

4) Multiskan EX with Primary version 2.1-0

Spare parts

Miscellaneous

POS.	*ITEM*	*CAT.*
1.	Filter box	104 1980
2.	Mains cord, USA	121 0520
3.	Mains cord, EURO	121 0550
4.	Dust cover	161 0002
5.	Multiskan MS/EX Printer kit	210 2840
6.	RS-232C extension cable (Multiskan RC – PC)	230 3890
7.	MAC serial cable (Multiskan RC – MAC)	230 3770
8.	RS-232C interface cable (Multiskan MS – MAC)	230 3850
9.	RS-232C interface cable (Multiskan MS – PC)	230 3840
10.	RS-232C interface cable (Multiskan MS – Printer)	230 4040
11.	F9/F25 serial cable (Multiskan RC)	230 5290
12.	F9/F25 serial cable (Multiskan MS/EX)	230 5300
13.	Service manual, Multiskan RC/MS/EX	280 6100

Labsystems

TECHNICAL BULLETIN

Technical Services

Letter N:o 35201

To SERVICE PERSONNEL **Date** 15.03.1995

Subject Multiskan 313, 314, 347-349, 352; Luminoskan 390, 391; iEMS Analyzer 1400; OEM names: Immunoscan, Smart Test & Sensident Scan

Battery Bulletin

Code: 150 6380

Battery Bulletin

GENERAL

The manufacturing of the RENATA CR 2477 lithium battery has come to an end.
New batteries are supplied in a installation kit, containing also new holders.
This kit will be supplied for a period of 3 years.

INSTRUMENTS WHICH MUST BE MODIFIED WITH THE NEW BATTERY HOLDER (see table1.)

INSTRUMENT:	SERIAL NUMBER:
Luminoskan type 390	All instruments
Luminoskan type 391	Serial numbers before 391000 - 023
iEMS Analyzer type 1400	Will be informed in the beginning of 1996
Multiskans types 313, 314, 347 - 349	All instruments
Multiskan MS, Sensident Scan	Serial numbers before 352002434
OEM names: Immunoscan & Smart Test	

After this modification is done, you can order a new battery (CR2477N) by using code 129 05180.

TABLE 1.

PREVIOUS HOLDER	PREVIOUS HOLDER	NEW HOLDER	NEW BATTERY	PCB	INSTR. TYPE
CRL5077	CR2477	NL5077	CR2477N	LUSMU-XX [1]	Luminoskan 390, 391
CRH5077	*CR2477*	NL5077	CR2477N	MUSCU-XX	Multiskans [2]
CRH5077	*CR2477*	NL5077	CR2477N	EMSCU-XX	iEMS Analyzer 1400

1) PCBs without smartwatch
2) Multiskan type: 313, 314, 347, 348, 349, 352

ATTENTION!
It is possible to make a mistake and fit the new battery wrong way to the holder of the previous battery!
All instruments, which are covered by this bulletin have a diode protectoin against wrong polarity, however time and date will be lost, when the instrument is switched off.

TERMINALS OF THE PREVIOUS BATTERY

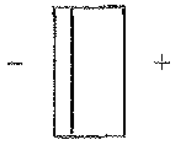

TERMINALS OF THE NEW BATTERY

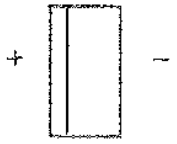

REQUIRED EQUIPMENT

- 3 mm allen key
- 2.5 mm allen key
- soldering iron

REQUIRED PARTS

Battery installation kit **Cat. 280 5740**
(A kit containing this bulletin, a new battery and holders NL5077 & NH5077.)
Please refer to the above table, to install correct holder.

INSTRUCTIONS FOR REPLACING THE BATTERY HOLDER

This modification has to be done by a qualified service personnel!

1. Switch the instrument off and remove the mains cord.

2. By using a 3mm allen key, remove the screws attaching the top cover.

3a) **iEMS Analyzer:** Disconnect all cables from EMSCU pcb and remove screws holding it.
b) **Multiskans:** Disconnect all cables from MUSCU pcb and remove screws holding it.
c) **Luminoskans:** Lift the LUSMU pcb from the rack.

4. Note the polarity before removing the Previous holder. (Plus terminal is indicated in the pcb by "corner mark", the holder has + marking).
Unsolder and remove the battery holder.

5. Install the new holder.

6. Place the PCB back and install the new battery.

For testing

7. Switch the instrument on and set the new time and date.

8. Switch the instrument off and wait for a moment until switching on again to confirm that the instrument has kept the time & date - setting.

DATE
August 20th, 1998

DOCUMENT
35501

INSTRUMENT
Multiskan MS/EX

FOR SERVICE PERSONNEL

Cut-off and Cubic spline EPROM Option kits for Multiskan MS/EX

GENERAL

It has been noticed that there has occurred some problems to know which after sales kits belongs to which instrument.

Easiest way to find out the Eprom option kit to be used is to see the primary version.
The primary version is shown during the start up.

ORDERING INFORMATION

Multiskan MS with Primary version 1.5-0
2806110 Cut-off Eprom Option kit
2806120 Cubic Spline Eprom Option kit

Multiskan MS with Primary version 1.8-0
2806112 Cut-off Eprom Option kit
2806122 Cubic Spline Eprom Option kit

Multiskan EX with Primary version 2.1-0
2806111 Cut-off Eprom Option kit
2806121 Cubic Spline Eprom Option kit

Please see next page for detailed information.

Multiskan MS / EX EPROM versions

Instrument	Module / chip	name	version	checksum	code	Musme pcb	Muscu pcb	After sales Eprom kits
Multiskan MS	Primary-EIA	PRIMSC1	1.5-0	808D	13677510	Musme-01	Muscu-2A	
	Agglutination	AGGMSC1	1.2-0	E3EC	13677530	cat 2002820	cat 2003561	
	Cut-Off	FCTMSC1	1.2-0	C45C	13677540			2806110
	Cubic Spline	CUBMSC1	1.2-0	0AE5	13677550			2806120
	Test	TSTMSC1	1.2-0	B2C8	13677520			
	PAL / GAL	PAL Musme-01	XDSS v.xxx	60E6	13677150			
Multiskan MS	Primary-EIA	PRIMSC1	1.8-0	F54B	13677650	Musme-02	Muscu-03	
	Agglutination	AGGMSC1	1.4-0	F07A	13677700	cat 2004370	cat 2004380	
	Cut-Off	FCTMSC1	1.4-0	DEB9	13677710			2806112
	Cubic Spline	CUBMSC1	1.4-0	1B7C	13677720			2806122
	Test	TSTMSC1	1.5-0	E9BA	13677660			
	PAL / GAL	GAL Musme-02	Sofex 5	A5FF	13677690			
Multiskan EX	Primary-EIA	PRIMXC1	2.1-0	A46E	13677651	Musme-02	Muscu-04	
	Agglutination	AGGMXC1	2.1-0	C58B	13677701	cat 2004370	cat 2004420	
	Cut-Off	FCTMXC1	2.1-0	4D28	13677711			2806111
	Cubic Spline	CUBMXC1	2.1-0	7CB1	13677721			2806121
	Test	TSTMXC1	2.1-0	5718	13677661			
	PAL / GAL	GAL Musme-02	Sofex 5	A5FF	13677691			