LEWMAR®

Electric/Hydraulic

TT Thruster 140 (2.2kW) to 300TT

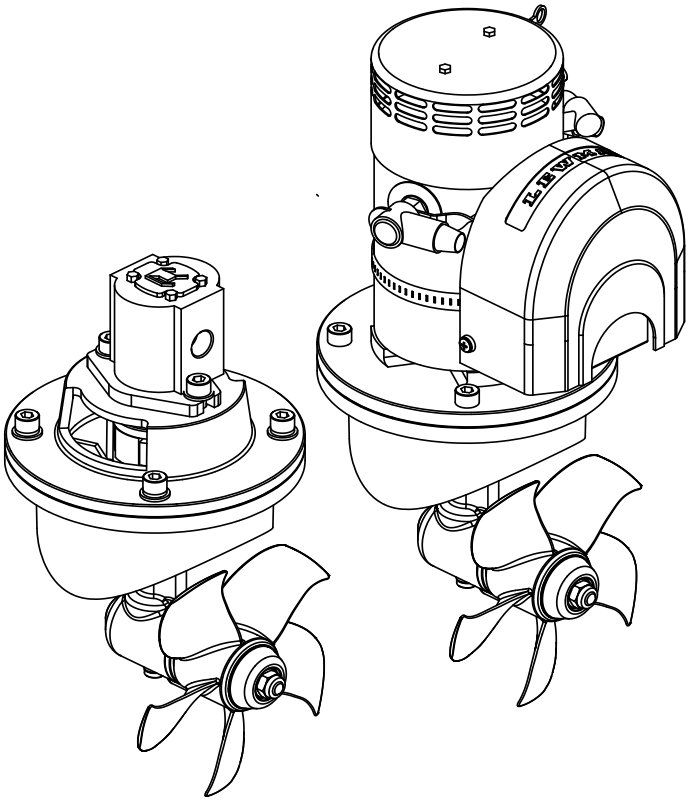

Owner's Installations, Operation & servicing manual

1- Introduction

Dear Customer,

Thank you for choosing Lewmar. Lewmar products are world renowned for their quality, technical innovation and proven performance. With a Lewmar product you will be provided with many years of outstanding service.

Product support

Lewmar products are supported by a worldwide network of distributors and Authorised Service Representatives. If you encounter any difficulties with this product, please contact your national distributor, or your local Lewmar dealer. Details are available at: www.lewmar.com

CE Approvals

For CE approval certificates contact Lewmar.

Important information about this manual

Throughout this manual, you will see safety and product damage warnings. You must follow these warnings carefully to avoid possible injury or damage.

2- Safety Notice

⚠ WARNING!

General

Please ensure that you thoroughly understand the operation and safety requirements of the thruster before commencing the installation. Only persons who are completely familiar with the controls and those who have been fully made aware of the correct use of the thruster should be allowed to use it. If there is any doubt of how to install or operate this unit please seek advice from a suitably qualified engineer.

- Please ensure that you thoroughly understand the operation and safety requirements of the thruster.
- Your thruster should not be operated close to swimmers, as a powerful suction of water is generated when in use.
- **The tunnel installation and any hull modifications should only be carried out by a specialist. This manual is based on a GRP tunnel installation.**
- We recommend that a qualified person install the thruster. Faulty installation will place the boat and crew in danger and make the warranty invalid.
- It is the unavoidable responsibility of the owner or master or other responsible party to assess the risk of any operation on the vessel.

Thruster supply

- The thruster is securely packed for transit. However all parts should be inspected for signs of damage before installation. If any parts are found to be damaged please contact lewmar.

Fitting

- This equipment must be installed and operated in accordance with the instructions contained in this manual. Failure to do so could result in poor product performance, personal injury and/or damage to your boat.
- Electric thrusters must be located in a dry environment. Should there be a need to install in a damp /wet location then the IP (Ignition Protected) version must be used.
- Electric bow thrusters use powerful electric motors, it is very important that there is sufficient battery capacity and large enough cables for safe operation. Using smaller than recommended battery and cables will cause loss of performance and may cause dangerous overheating.
- Electric motors spark and run hot. Do not place near flammable or sealed areas.
- Main battery must not be connected and power must not be switched on until all covers and terminal protectors are correctly fitted.
- It is very dangerous to run the thruster out of the water, even for a few seconds, the motor will over speed

by 300%, causing damage to the motor seals etc. and the propeller will cause serious damage to whatever comes into contact with it. This action will invalidate the warranty.

- Consult the boat manufacturer if you have any doubt about the strength or suitability of the mounting location.

Electrical

- Make sure you have switched off the power before you start installing this product.
- If in doubt about installing electrical equipment please seek advice from a suitably qualifi ed electrical engineer.

To the best of our knowledge, the information in this manual was correct when it went to press. However, Lewmar cannot accept liability for any inaccuracies or omissions it may contain.

In addition, our policy of continuous product improvement may change specifications without notice. As a result, Lewmar cannot accept liability for any differences between the product and the manual.

⚠ This manual forms part of the product and MUST BE RETAINED along with, OR incorporated into, the Owner's Manual for the vessel to which the thruster is fittted.

3- Installation

3.1 Choosing the location

⚠ A competent, marine engineer must carry out any work on the hull of your boat.

⚠ The boat MUST be out of the water, levelled and secure in its cradle.

The actual position of the Thruster will depend on the internal & external construction of the Motor Boat or Sailing Yacht. For optimal performance the Thruster should be mounted within the following:

- As far forward as possible (Fig 3.1.1 / lever effect).
- 1 x Ø below the waterline to prevent air being sucked into the tunnel. (Fig. 3.1.2 / 0.75 x Ø minimum.).
- Minimum suggested tunnel length 2 x Ø.

NOTE: Ensure there is sufficient space for the Thruster assembly complete with motor and controls in the boat.

Ø = Tunnel Diameter

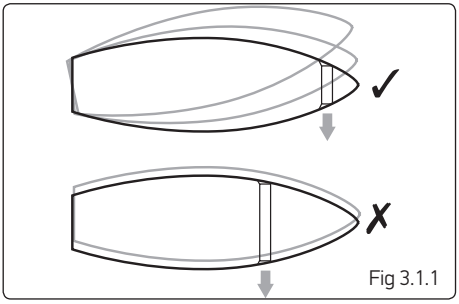

Fig 3.1.1

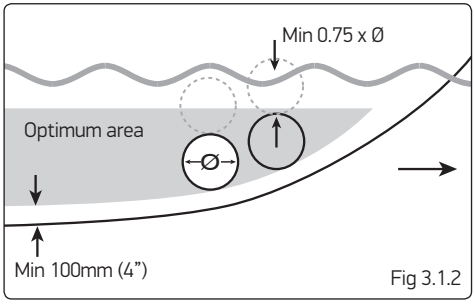

Fig 3.1.2

TT Thruster can be fitted new or as a replacement for an existing thruster. Tunnel dimensions listed on the following table.

NOTE: Check mounting holes on the saw template

THRUSTER MODEL (kW)	INSIDE DIAMETER mm	INSIDE DIAMETER inch	WALL THICKNESS mm	WALL THICKNESS inch
140	140	5 ½	4.0-5.0	$^{5}/_{32}$ - $^{3}/_{16}$
185 (3.0 & 4.0)	185	7 $^{9}/_{32}$	4.0-6.0	$^{5}/_{32}$ - ¼
185 (5.0 & 6.0)	185	7 $^{9}/_{32}$	6.0	¼
250	250	9 $^{27}/_{32}$	7.5	$^{9}/_{32}$
300	300	11 $^{13}/_{16}$	9.0	$^{11}/_{32}$

- The recommended tunnel is designed to fit a Lewmar saddle, take the weight of the Thruster and the torque of the motor.
- Fig 3.1.3 - To reduce any potential loss of performance or damage to the propeller the entrance of the tunnel can be altered to improve thrust as well as reduce noise.

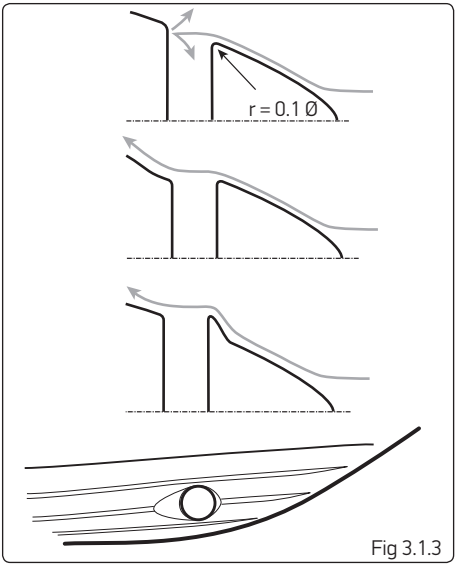

Fig 3.1.3

3.2 Preparing the hole for the tube

⚠ For general guidance for GRP boats only. Problems caused by faulty installation of the tunnel are the installers full responsibility.

⚠ A competent, marine engineer must carry out any work on the hull of your boat.

When you are satisfied the best location for the Thruster unit has been found within the parameters available proceed as follows.

- Fig 3.2.1 - Make a jig to precisely align the drill holes either side of the hull.

NOTE: Double check everything before drilling.

- Drill a pilot hole in both sides of the hull.

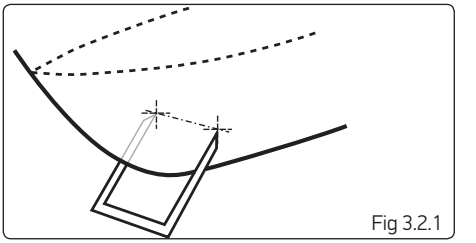
Fig 3.2.1

- Form a wire guide to diameter of the tunnel hole, mark, check and cut.
- Insert tube in the hole, mark and remove excess.

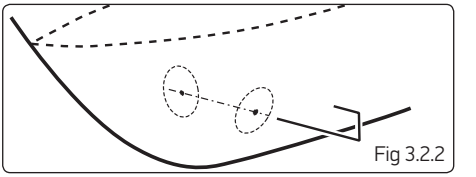
Fig 3.2.2

- Grind off gel coat etc. Insert tunnel and fix allowing enough room inside for saddle location on the tunnel.
- Gel coat finished installation and antifoul.

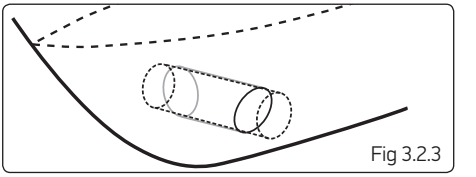
Fig 3.2.3

3.3 Preparing for fitting the thruster

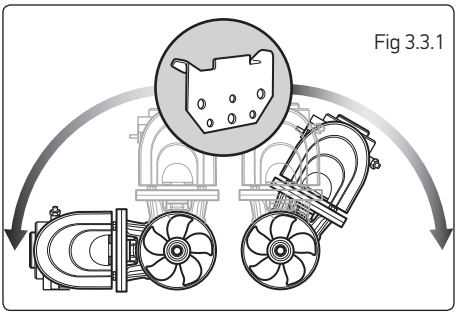
Fig 3.3.1

- The Thruster can be installed at any angle within 90° from vertical.

⚠ Electric motors must be supported if installed more than 30° from vertical (Fig 3.3.1).

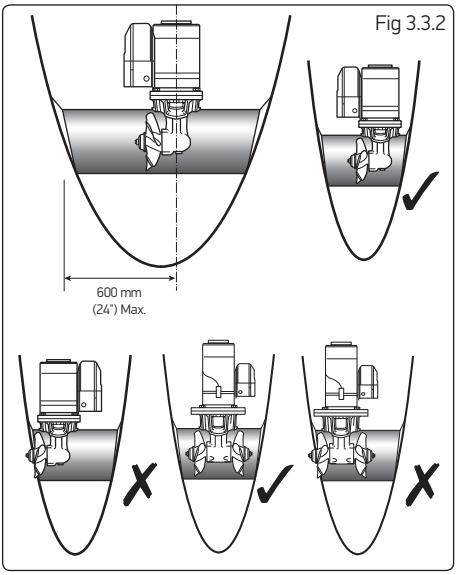

Fig 3.3.2

- Choose position of thruster, ensuring internal room for motor and controls and that the propeller is easily reached from outside.

NOTE: Fig 3.3.2. - Normal install is to Port (single propeller unit)

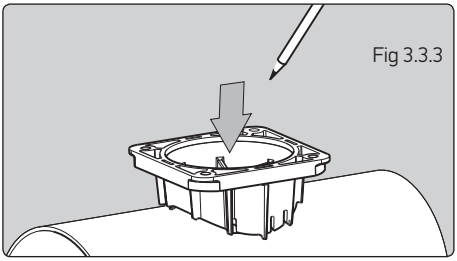
Fig 3.3.3

- Place the thruster saddle in the desired position, ensure the fit is firm and free from movement then mark centre.

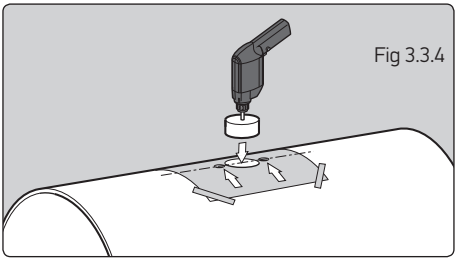
Fig 3.3.4

- **Position template on centreline, verify correct and carefully cut thruster hub hole using an appropriate hole saw for GRP and applying light cutting pressure only taking care not to splinter the tube.Remove any burrs with care, seal with resin mix and fair as required.**
- **Note: Poor alignment may affect hub positioning.**

3.4 Installing hub unit and saddle - 140TT & 185TT models

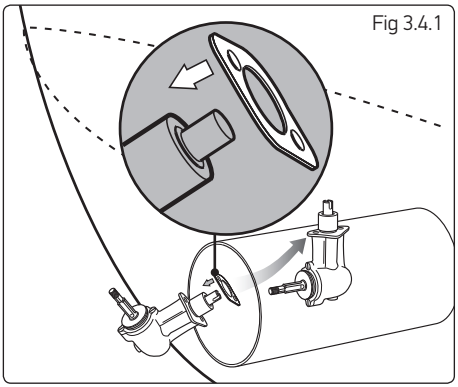
Fig 3.4.1

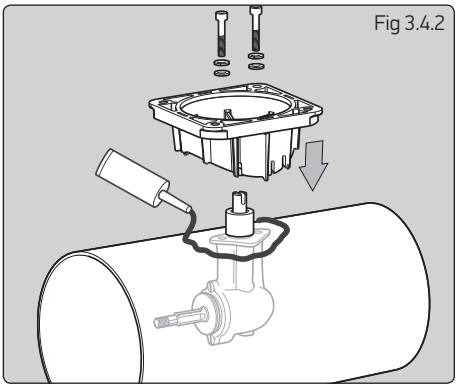
Fig 3.4.2

Note: illustrations based on 140TT saddle

- To suit the wiring configuration supplied fit the thruster propeller on the port side.
- Place gasket on hub and locate through centre hole. Sealant can be applied to gasket and flange to aid sealing.

NOTE: To achieve the correct position of the propeller in the tunnel the gasket must be in place.

NOTE: Poor exterior tunnel surface could cause leakage and noise. Apply sealant to this area as required (Fig. 3.4.2).

- Apply zinc chromate paste or marine grease to location bore and assemble saddle onto hub (SikaFlex® or similar maybe used to seal saddle in place). Apply Blue Loctite® 243 to bolts and hand tighten along with supplied washers (Fig. 3.4.2).

NOTE: Tighten to full torque within 10 minutes.

3.5 Gearbox position - 185TT models

On installation check the position of the gearbox (leg) stem in the saddle.

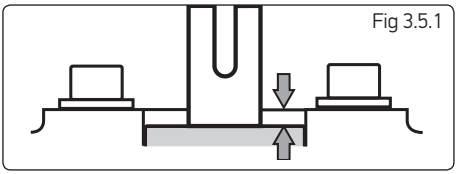
Fig 3.5.1

- If it is below 2 mm (1/16”), material must be removed from the tunnel (Fig 3.5.1).

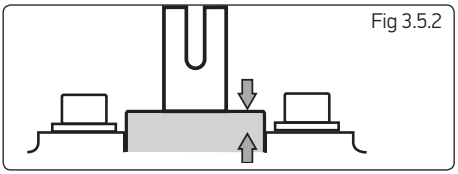
Fig 3.5.2

- If it is above 3.5 mm (⅛”), the tunnel should be packed under the saddle (Fig 3.5.2).

3.6 Propeller assembly - all models

- Check the hub gasket is in place.
- Fig 3.6.1 - Assemble anode kit and propeller in this order: large washer, propeller, anode, small washer and nyloc nut onto propeller shaft.

⚠ Check the propeller has been assembled in the correct order.

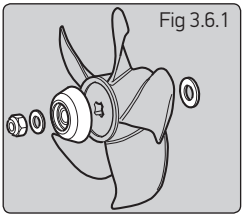
Fig 3.6.1

Note: Tighten each bolt alternately a number of times to full torque.

- Fig 3.6.2 - Tighten hub/saddle bolts to 9 Nm (6.6 lb.ft) for 140 or 21 Nm (15.5 lbs.ft) for 185.

DO NOT allow propeller to touch tunnel.

DO NOT antifoul zinc anode

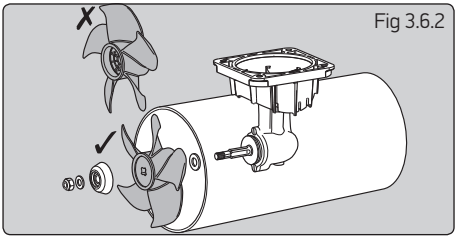
Fig 3.6.2

- Fig 3.6.3 - Check that propeller is centred and free turning (within 10 minutes of applying Blue Loctite® 243).

- Antifoul bronze hub and propeller if desired.

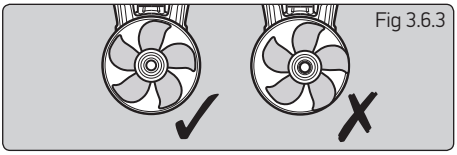
Fig 3.6.3

- Tighten propeller nut to 10 Nm (7.4 lbs.ft) for 140 or 15 Nm (11 lbs.ft) for 185, a length of wood placed between propeller blade and tunnel will stop movement.

DO NOT overtighten propeller nuts.

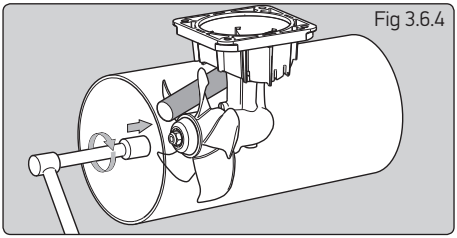
Fig 3.6.4

3.7 Installing hub unit and saddle models 250TT & 300TT

- Place gasket on hub and locate through centre hole. Sealant can be applied to gasket and flange to aid sealing.

NOTE: To achieve the correct position of the propeller in the tunnel the gasket must be in place.

NOTE: Poor exterior tunnel surface could cause leakage and noise. Apply sealant to this area as required (Fig 3.7.2).

- Apply zinc chromate paste or marine grease to location bore and assemble saddle onto hub (SikaFlex® or similar maybe used to seal saddle in place). Apply Blue Loctite® 243 to bolts and hand tighten along with supplied washers (Fig 3.7.2).

NOTE: Tighten to full torque within 10 min

NOTE: Tighten each bolt alternately a number of times to full torque.

- Tighten hub/saddle bolts to 33 Nm (24 lbs.ft) for 250 or 82 Nm (60.5 lbs.ft) for 300. Check that propeller is centred and free turning (within 10 minutes of applying Blue Loctite® 243).

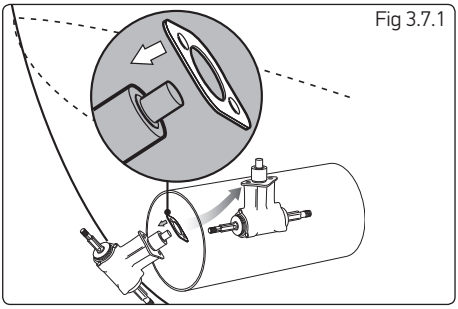
Fig 3.7.1

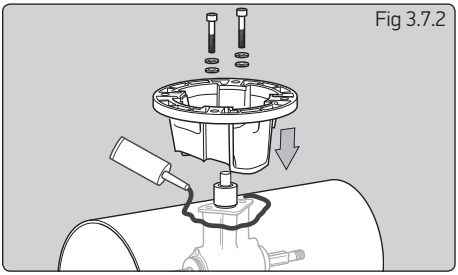
Fig 3.7.2

- Assemble anode kit and propeller in this order:- large washer, propeller, anode, small washer and nyloc nut onto propeller shaft. To suit the wiring configuration supplied fit the thruster LH propeller on the port side.

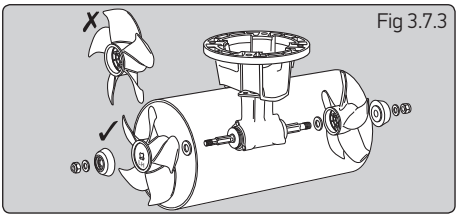
Fig 3.7.3

⚠ Check the propeller has been assembled correctly (Fig 3.6.1).

⊘ DO NOT allow propeller to touch tunnel.

⊘ DO NOT antifoul zinc anode

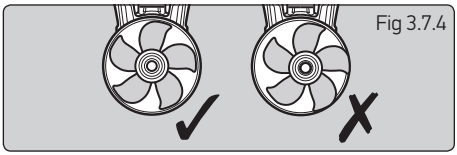
Fig 3.7.4

- Antifoul bronze hub and propeller if desired.

- Tighten propeller nut to 35 Nm (26 lbs.ft), a length of wood placed between propeller blade and tunnel will stop movement.

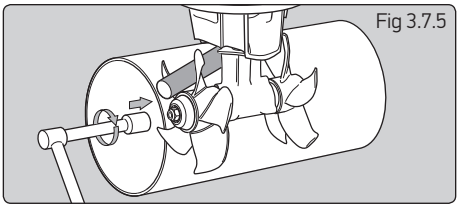
Fig 3.7.5

⊘ DO NOT overtighten propeller nuts.

3.8 Electric motor unit support

If the electric motor is installed more than 30° from the vertical it MUST be supported and secured to the support with a strap (See Accessoires) around the main motor unit.

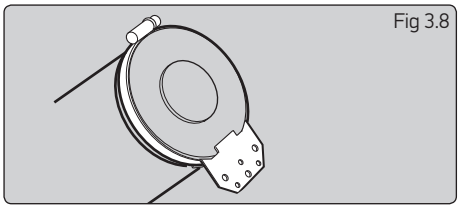
Fig 3.8

3.9 Installing electric motor unit - 140TT & 185TT models

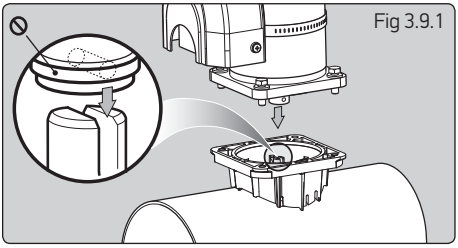
Fig 3.9.1

Note: illustrations based on 140TT saddle

- Align motor drive pin inline with slot in shaft. Apply grease to hub shaft.

⊘ DO NOT REMOVE the drive pin plastic retainer tie on the motor drive shaft.

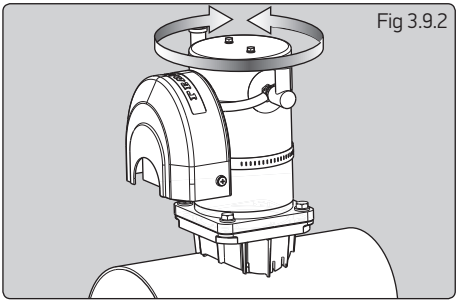
Fig 3.9.2

- Slide motor into position and align holes for most suitable installation.
- Bolt motor assembly to saddle and tighten bolts to 20 Nm (15 lbs.ft) for 140 or 35 Nm (25.8 lbs.ft) for 185. Apply Blue Loctite® 243 to all bolts.

3.10 Installing electric motor unit model 250TT & 300TT

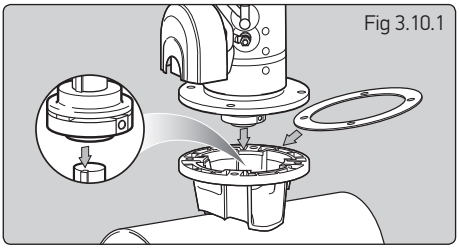
Fig 3.10.1

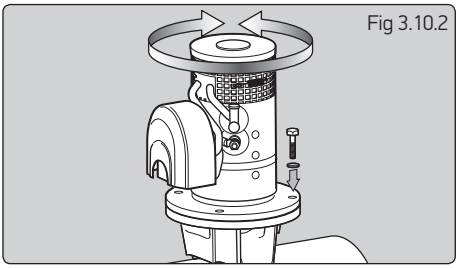
Fig 3.10.2

Coupling is factory fitted. DO NOT remove.

- Place insulator in between saddle and motor flange. Line up key to coupling keyway.

- Remove drive shaft key retaining tie, grease shaft, slide motor into position and align holes for most suitable installation and bolt motor assembly to saddle applying Blue Loctite® 243 to bolts.

3.11 Installing hydraulic motor unit model 185TTH to 300TTH

Coupling is factory fitted. DO NOT remove.

- Place insulator in between saddle and motor flange. Line up key to coupling keyway.

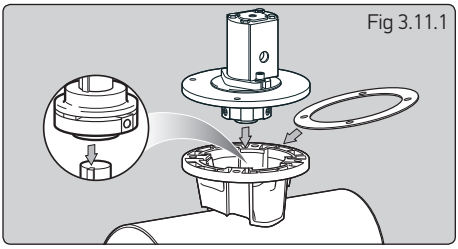
Fig 3.11.1

- Remove drive shaft key retaining tie, grease shaft, slide motor into position and align holes for most suitable installation and bolt motor assembly to saddle and tighten.

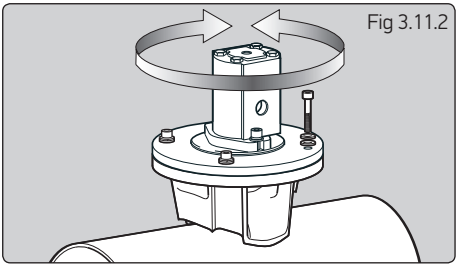
Fig 3.11.2

- Motor ports require male/female connectors with correct size hydraulic sealing washers.
  185TT Main ports = ⅜" BSPP.
  Main ports = ¾" BSPP.
  Drain ports = ¼" BSPP.

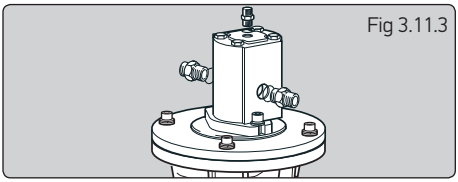
Fig 3.11.3

NOTE: It is advisable to fit insulated pipe sections to prevent thruster corrosion.

MODEL	PART N°	MAX OUTPUT	MOTOR DISP.	DELTA	FLOW	MAX THRUST
185TTH	591820	7 kW	6 cc/rev	210 bar	26 l/min	100 Kgf
250TTH	592520	15 kW	26 cc/rev	122 bar	81.5 l/min	200 Kgf
250TTH	592521	15 kW	17 cc/rev	190 bar	52.3 l/min	200 Kgf
300TTH	593020	22.5 kW	30 cc/rev	182 bar	82.1 l/min	300 kgf
300TTH	593021	22.5 kW	26 cc/rev	210 bar	71.7 l/min	300 Kgf

3.12 Final checks - All models

Check list hydraulic

- Check drain line fitted.
- All fittings are tight with seals in place.
- Hydraulic system has been checked and adjusted to correct pressures and flows.

Operation of Hydraulic unit

- Refer to system suppliers instructions.

Check list mechanical

- Check all bolts and nuts are tight.
- Check the propeller/s are correctly installed and the nuts tightened.
- Check the motor control box cover is in place.
- Check the propeller/s can be turned - before working on unit check battery switch is off or remove the fuse.

NOTE: Saddle and motor are firmly seated on the tube.

4- Electrical wiring installation

4.1 Typical electrical layout model 140TT 2.2 kW and 185TT

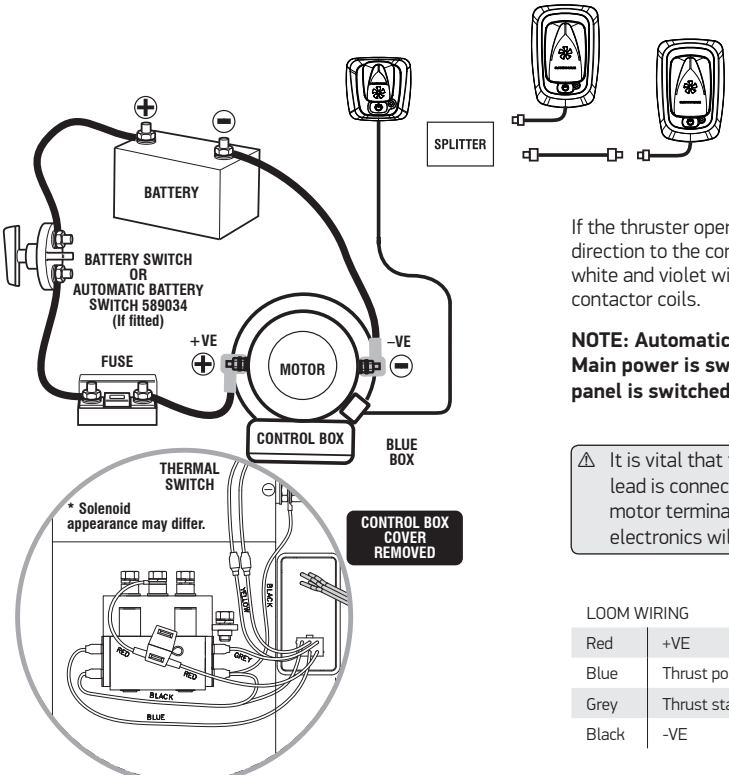

If the thruster operates in an opposite direction to the control panel, swap the white and violet wire connections on the contactor coils.

NOTE: Automatic switch (if fitted). Main power is switched on when panel is switched on.

⚠ It is vital that the positive battery lead is connected to the positive motor terminal or damage to the electronics will occur.

LOOM WIRING	
Red	+VE
Blue	Thrust port switch
Grey	Thrust starboard switch
Black	-VE

4.2 Typical electrical layout model 250TT & 300TT

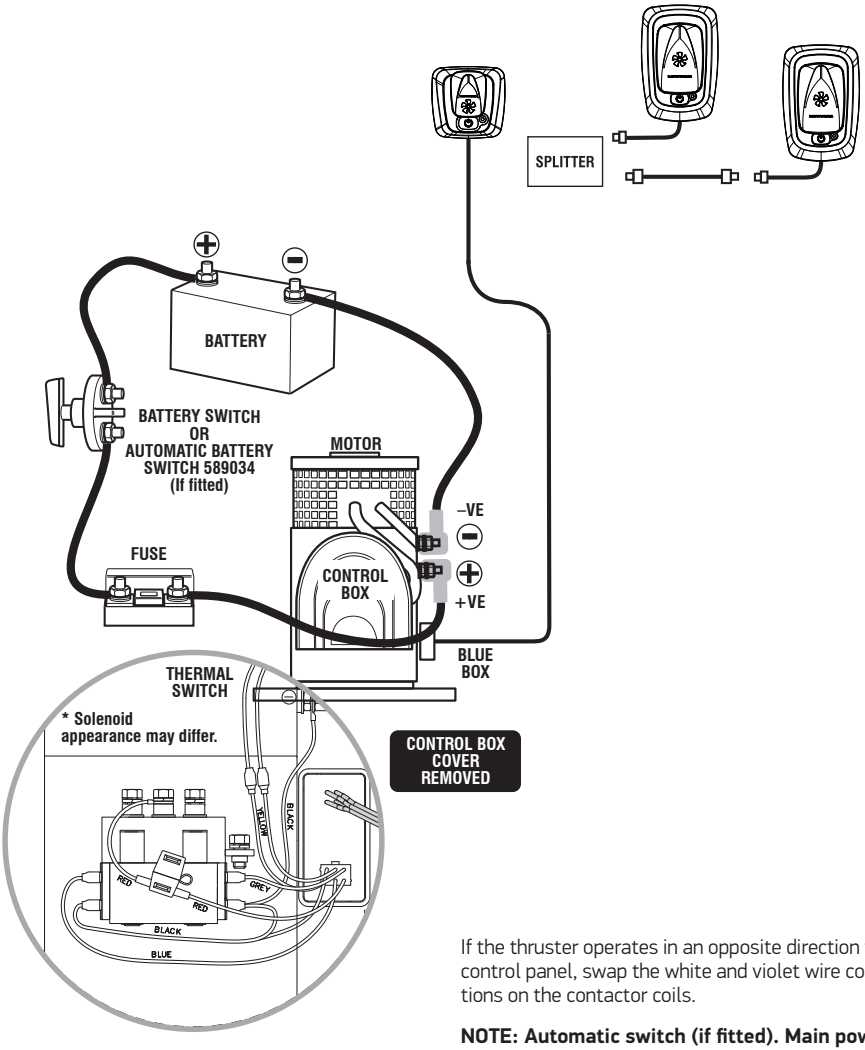

If the thruster operates in an opposite direction to the control panel, swap the white and violet wire connections on the contactor coils.

NOTE: Automatic switch (if fitted). Main power is switched on when panel is switched on.

⚠ It is vital that the positive battery lead is connected to the positive motor terminal or damage to the electronics will occur.

NOTE: For dual thruster controls see stern thruster manual included in stern kit or on www.lewmar.com

LOOM WIRING

Red	+VE
Blue	Thrust port switch
Grey	Thrust starboard switch
Black	-VE

4.3 Electric motor terminal connections

- Terminals must be correctly clamped to motor studs. Use a pair of spanners - the one nearest motor to stop rotation of the stud.
- Spanner sizes are 13 mm for 140TT and 17 mm for 185TT - 300TT. Tighten the bolts to 20 Nm (15 lbs. ft).

⊘ DO NOT overtighten electric motor terminal nuts.

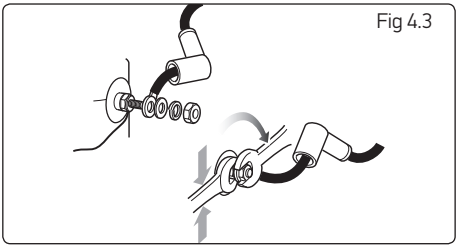
Fig 4.3

4.4 Battery cable connections

⚠ Incorrect installation of battery cables or damage to connection studs may result in a short to the thruster body. Use the examples above to check for a correct installation on both +V and -V battery connections.

- Correct installation. Supplied cable boots are used and no bare wires exposed (Fig 4.4.1).
- Live wire exposed! (Fig. 4.4.2). Correct the cable installation to match (Fig 4.4.1).
- Terminal or motor is damaged. Contact Lewmar Limited (Fig 4.4.3).
- Crimp inver ted and is touching motor! (Fig 4.4.4). Correct the cable installation to match as (Fig 4.4.1).

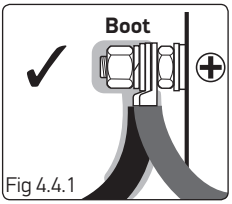

Fig 4.4.1

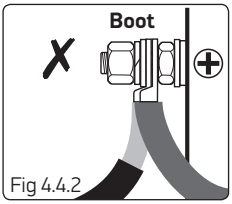

Fig 4.4.2

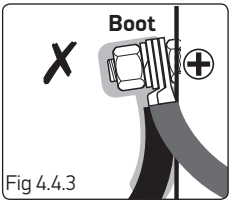

Fig 4.4.3

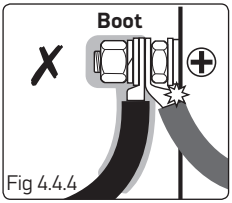

Fig 4.4.4

4.6 Correct cable sizes

NOTE: Cable length is total from battery to thruster and back.

- Example: Measure the total cable run from the battery to thruster and back in metres. Grey area on the table shows a total of 28 m (92 ft) of cable with a model 250 8.0 kW thruster would need 95 mm CSA (000 AWG) cable.
- Battery crank capacity should be at least equal to the thruster current.
- Main power cables should be run from the batteries and must have an inline fuse fitted.

⊘ The installation MUST have a battery switch that is switched off whilst the thruster is not in use or the boat is unoccupied.

- The cables should be terminated with a ring terminal corresponding to the motor studs, 8 mm (5/16”) for 140TT and 10 mm (⅜”) for 185TT, 250TT and 300TT. It is important that this termination is secure so that the high current is transferred to the motor efficiently. The minimum voltage at motor when running should be 10V for 12V and 21V for 24 V units.
- Ensure the insulating boots, supplied with the unit, are correctly fitted.

NOTE: If very large cables are used discard supplied boots and fit appropriate sized ones.

TT MODEL	CURRENT (A)	Cable CSAmm - Cable length in metres								Cable AWG - Cable length in feet							
		25	35	50	70	95	120	150	175	3	2	1	0	00	000	0000	2X0000
140 2.2 kW-12 V	280	6	10	15	21	-	-	-	-	20	30	40	50	60	-	-	-
185 3.0 kW-12 V	330	6	8	10	15	21				19	24	30	37	49	62	-	-
185 3.0 kW-24 V	160	18	22	-	-	-	-	-	-	63	80	-	-	-	-	-	-
185 4.0 kW-12 V	470	4	6	8	12	16	21	26	30	14	18	23	30	38	48	60	
185 4.0 kW-24 V	235	12	16	25	33	-	-	-	-	42	50	68	80	100	-	-	-
185 5.0 kW-12 V	480	4	6	8	12	16	20	25	29	14	18	23	29	37	47	59	-
185 5.0 kW-24 V	240	12	16	24	32	-	-	-	-	42	50	68	80	100	-	-	-
185 6.0 kW-12 V	700	-	-	6	8	12	15	21	28	-	13	16	21	28	35	50	100
185 6.0 kW-24 V	370	9	12	16	24	32	-	-	-	-	37	45	60	74	97	-	-
250 8.0 kW-24 V	500	7	10	12	21	28	36	45		-	32	41	52	66	84	105	-
250 9.6 kW-48 V	330	-	26	37	50	64	-	-	-	-	80	98	118	154	-	-	-
300 10.8 kW-24 V	650	4	6	9	12	16	21	25	30	-	19	24	31	39	49	65	130
300 15.0 kW-48 V	420	-	24	35	48	62	-	-	-	-	74	92	112	148	-	-	-

4.7 Electrolytic test

To prevent electrolytic corrosion or faults, the thruster motor body and assembly MUST remain isolated from any power supply or grounds. The installer can check for this using a multimeter in the following ways.

Test 1. Fig 4.7.1

With the negative not connected and the positive cable connected but with battery switch off or fuse removed. Use a continuity tester to check for a connection between the –VE stud and motor body and also between +VE stud and motor body. In both cases the meter should give no indication of an electrical connection.

If a connection is measured between the +VE stud and the motor body, check installation for cables or wires touching the assembly or for damage to assembly.

If a connection is measured between the –VE stud and the motor body, remove any bonding straps attached to the assembly and check as before.

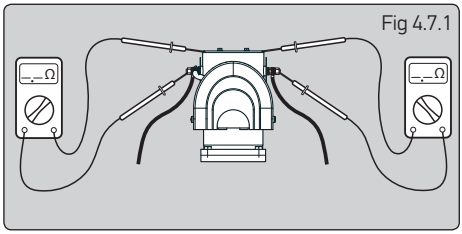

Fig 4.7.1

Test 2. Fig 4.7.2

With the batter y applied: Use a voltmeter to test the voltage between the –VE motor stud and the thruster motor body. If the supply voltage (12V / 24V) is measured, disconnect power immediately and inspect the assembly for faulty installation or damage.

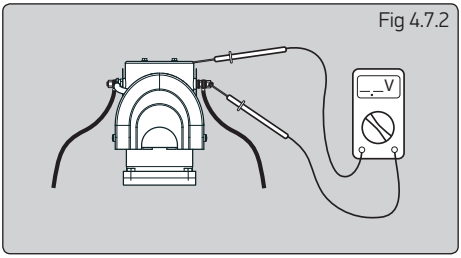

Fig 4.7.2

4.8 Installing control panel - all models

A 63.5 mm (2½") hole saw is required. Ensure there is sufficient depth for the control panel and access for the switch leads and plug (see saw template).

The panel has an integral seal and can be clamped from the rear or with the bezel from the top. Trim clamp depending on panel thickness.

The small plug connects at the panel. If two or more panels are installed use the optional Y connectors (Sec 6.6).

The auxiliary wire is used to connect an automatic battery switch. Please refer to the units instructions. If automatic battery switch not fitted, disregard auxiliary wire.

Fig. 4.8.1

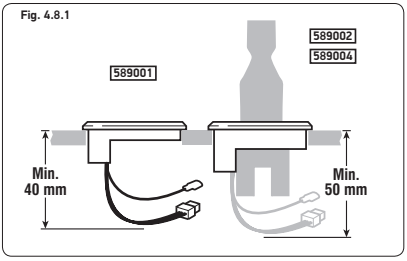

Fig. 4.8.2

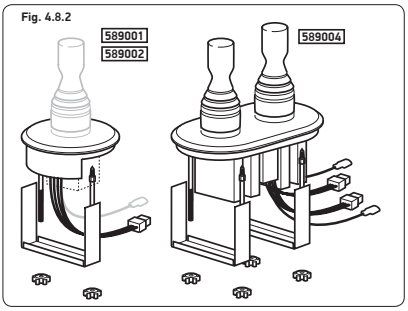

Fig. 4.8.3

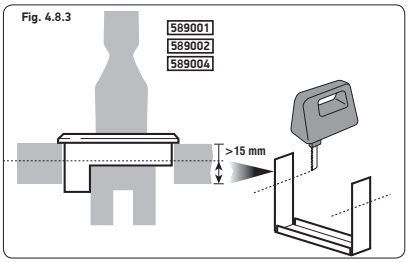

Fig. 4.8.4

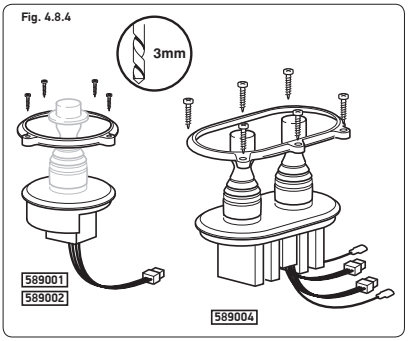

4.9 Final checks

⊘ Check the power is OFF

Check list electrical

- Check motor connections are tight with rubber boots in place.
- The correct fuse is in place.
- Check all switch wires are connected to correct motor terminal.
- Now the cables can be connected to the battery.
- Perform electrical check , Section 2.8.

⚠ The thruster must not be operated unless it is in water.

Operation of electrical unit

- Ensure batteries are fully charged before switching on the main power.
- When first operating the thruster, make sure you are not close to other vessels.

5- Operating your thruster

5.1- 140TT 2.2 kW to 300TT 15.0 kW operation and safety features

Lewmar control panel 589001 and 589002.

NOTE: If Thruster is operated constantly for 3 minutes it will power down. Panels will deactivate.

NOTE: Dual Thruster panel has same functions as single.

NOTE: The system is designed to automatically power down after no operation for 20 minutes.

To activate the control panel press ⏻ and hold for 1 second (Fig 5.2.1).

Fig. 5.1.1

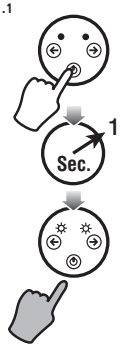

⊘ DO NOT press both buttons at the same time.

Changing direction.

Press the button or move the joystick for the direction you wish to thrust. Press the opposite button or move the joystick to change direction). After 1 second thruster activates.

NOTE:If thermal cut-out is activated all power to the controls is disabled.Wait for unit to cool down.

Fig. 5.1.2

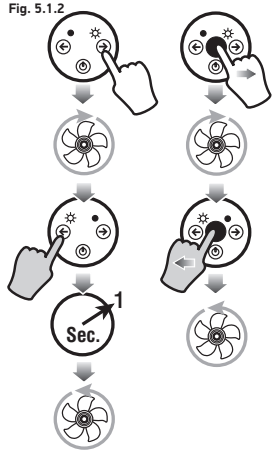

To cancel either thruster direction stop pressing button or return joystick to central position.

Fig. 5.2.1

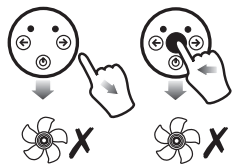

Additional controller

Pressing opposite button on a second control panel when thruster is operating will cancel operation of thruster

Fig. 3.1 .4

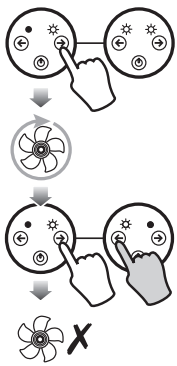

Additional controller

Operating same direction button when still in operation on other control panel will hane no effect

Fig. 3.1.5

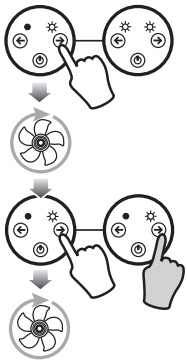

6- Servicing your thruster

6.1 Service schedule

Thrusters are more likely to attract 'debris', so it is necessary to regularly check the tunnel.

New install:

The anode should be checked after approximately 3 - 4 months to gauge an appropriate replacement schedule.

At the annual boat service:

- Remove any debris from tunnel, propeller and hub.
- Replace the anode.
- If the propeller is damaged or heavily contaminated, replace it, best to be safe.
- Apply grease to exposed thruster seal and shaft.
- If hub is removed the tunnel gasket must be replaced.
- Inspect motor, ensure all leads are still tight.
- Check all bolts and nuts are to correct torque.
- Check the motor assembly is dry and that the compartment is water tight.
- Check and clean out thruster compartment.

Electric:

- Inspect electric motor, ensure all leads are still tight.
- Brush out carbon dust from top of electric motor especially on aluminium boats. Recommend qualified electrician.

Hydraulic:

Refer to hydraulic system supplier for service requirements.

6.2 Changing drive pin 140TT or 185TT

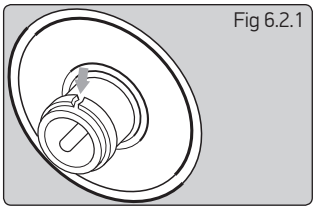

Cut cable tie on shaft (if fitted)

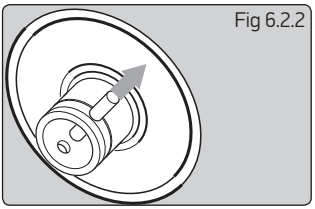

Punch out pin parts

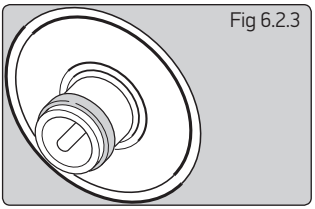

Tap in new pin and secure with new plastic cable tie

Additional controller

Pressing opposite button on a second control panel when thruster is operating will cancel operation of thruster

Operating same direction button when still in operation on other control panel will have no effect.

7- Weight & Specifications

7.1 Electric

PART NO	MODEL	VOLTAGE	POWER		GEARBOX MATERIAL	TUNNEL	PROPELLER	THRUST		WEIGHT		FUSE	FUSE HOLDER	
		V	kW	hp		(mm)		kgf	lbs	Kg	lbs		T1 - 589006	T2 - 589013
591481	140TT 2.2	12	2.2	3.0	Composite	140	single 5 blade	42	92	13	29	200A- 589012	✓	✓
591801	185TT3.0	12	3.0	4.0	St/St	185	single 5 blade	58	128	20	43	250A- 589008	✓	✓
591802	185TT3.0	24	3.0	4.0	St/St	185	single 5 blade	58	128	20	43	130A- 589007	✓	✓
591807	185TT4.0	12	4.0	5.4	St/St	185	single 5 blade	65	143	20	43	400A- 589010		✓
591808	185TT4.0	24	4.0	5.4	St/St	185	single 5 blade	65	143	20	43	130A- 589007	✓	✓
591803	185TT5.0	12	5.0	6.7	St/St	185	single 5 blade	82	180	27	59	400A- 589010		✓
591804	185TT5.0	24	5.0	6.7	St/St	185	single 5 blade	82	180	27	59	130A- 589007	✓	✓
591805	185TT6.0	12	6.0	8.0	St/St	185	single 5 blade	97	213	27	59	500A- 589011		✓
591806	185TT6.0	24	6.0	8.0	St/St	185	single 5 blade	97	213	27	59	325A- 589009	✓	✓
591833	185TT5.0 IP	12	5.0	6.7	St/St	185	single 5 blade	82	180	27	59	400A- 589010		✓
591834	185TT5.0 IP	24	5.0	6.7	St/St	185	single 5 blade	82	180	27	59	130A- 589007	✓	✓
591836	185TT6.0 IP	24	6.0	8.0	St/St	185	single 5 blade	97	213	27	59	325A- 589009	✓	✓
592501	250TT 8.0	24	8.0	10.8	Bronze	250	Twin CR 5 blade	140	308	46	102	400A- 589010		✓
592502	250TT 9.6	48	9.6	13	Bronze	250	Twin CR 5 blade	170	374	50	110	250A- 589008	✓	✓
592503	250TT 8.0	24	8.0	10.8	Aluminium	250	Twin CR 5 blade	140	308	46	102	400A- 589010		✓
593001	300TT 10.8	24	10.8	14.5	Bronze	300	Twin CR 5 blade	250	550	65	143	500A- 589011		✓
593002	300TT 15.0	48	15.0	20.0	Bronze	300	Twin CR 5 blade	280	616	68	150	400A- 589010		✓
593003	300TT 10.8	24	10.8	14.5	Aluminium	300	Twin CR 5 blade	250	550	65	143	400A- 589010		✓

7.2 Hydraulic

MODEL	POWER		TUNNEL	PROPELLER/S	THRUST		WEIGHT	
	kW	hp	(mm)		kgf	lbs	Kg	lbs
185TTH	7	10	185	Single 5 blade	100	220	8	17.5
250TTH	15	20	250	Twin CR 5 blade	200	240	13	28.5
300TTH	22.5	30	300	Twin CR 5 blade	300	660	17	37.5

8- Parts list

8.1 Model 140TT 2.2kW 12V

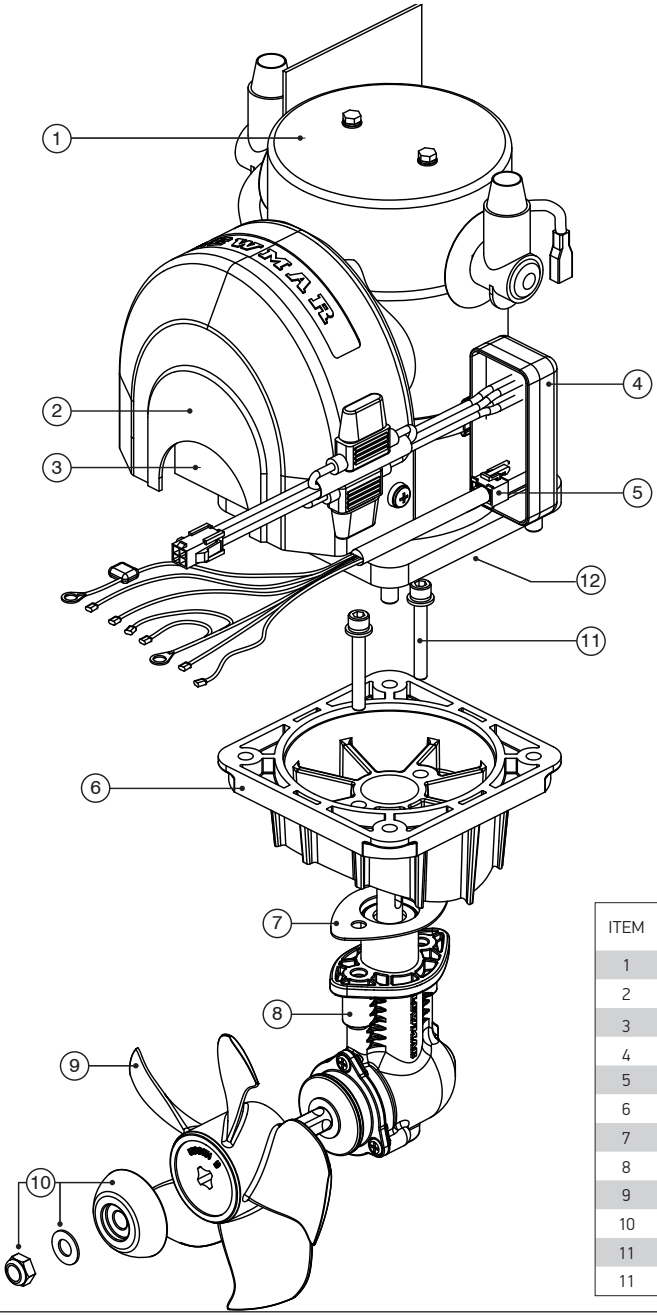

ITEM	DESCRIPTION	PART NO
1	Motor Assembly	581026
2	Cover	553034
3	Solenoid	B11126
4	Black Box	559003
5	Motor Loom	589250
6	Mounting Saddle	551052
7	Tunnel gasket	551035
8	Hub assembly	589156
9	Propeller and washer	589151
10	Propeller Anode kit	589150
11	Installation fixing kit	589152
11	Drive pin	559018

8.2 Model 185TT/H - 3.0 to 6.0kW - 12 & 24V

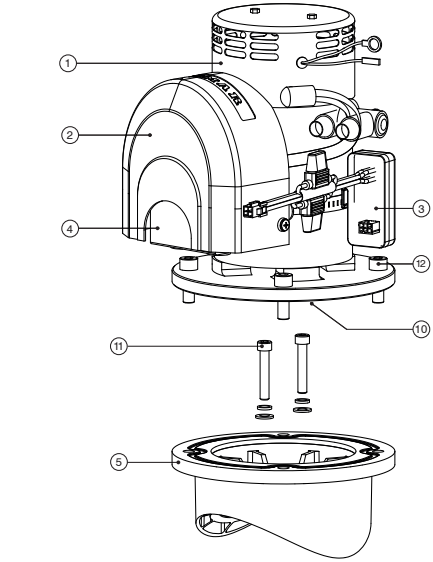

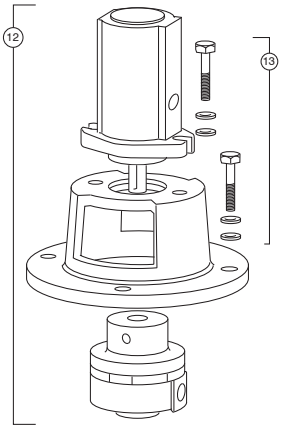

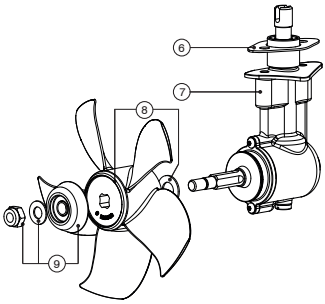

ITEM	DESCRIPTION	PART NO	kW	Volts
1	Motor Assembly	583026	3.0	12
		583027	3.0	24
		583032	4.0	12
		583033	4.0	24
		583028	5.0	12
		583029	5.0	24
		583030	6.0	12
		583031	6.0	24
2	Cover	553034	3.0	12-24
		553036	4.0/5.0	12-24
		555034	6.0	12
3	Black Box	559003	All	All
4	Solenoid	B11126	3.0	12
		B11127	3.0	24
		B11128	4.0/5.0	12
		B11129	4.0/5.0/6.0	24
		B11130	6.0	12
5	Mounting Saddle	553071	All	All
6	Tunnel Gasket	553035	All	All
7	Hub - 2.2 Ratio	583001	3.0	12-24
	Hub - 1.5 Ratio	583003	4.0-6.0	12-24
8	Propeller & washer	589351	All	All
9	Anode kit	589350	All	All
10	Drive pin	559017	All	All
11	Installation fixings kit	589352	3.0	12-24
		589355	4.0-6.0	12-24
Hydraulic only				
12	Hydraulic Motor Assembly	583040	5.0 cc/rev	
		583041	6.0 cc/rev	
13	Installation fixing kit	589352	All	

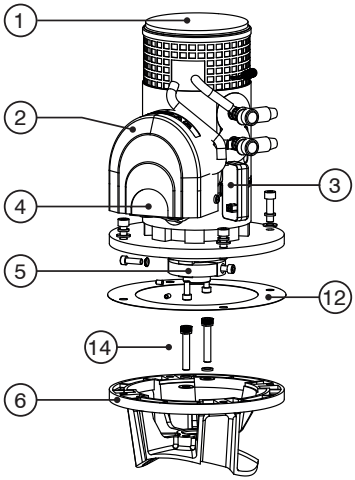

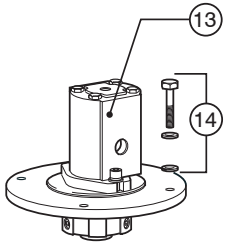

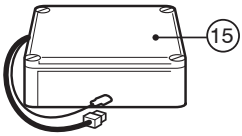

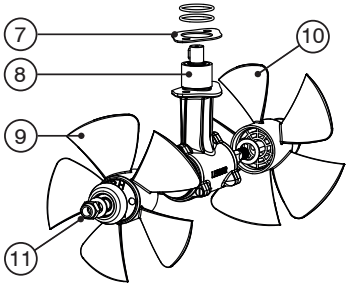

8.3 Model 250TT/H - 8.0kW - 24V

ITEM	DESCRIPTION	PART NO
1	Motor Assembly 8.0 kW 24V	585026
	Motor Assembly 9.6 kW 48V	585029
2	Cover	553036
3	Black box	559003
4	Solenoid	B11129
5	Coupling	585014
6	Mounting Saddle	555025
7	Tunnel Gasket	555035
8	Hub	589557
9	Right hand propeller and washer	589551
10	Left hand propeller and washer	589552
11	Anode kit	589550
12	Plastic washer	555038
14	Installation fixings kit	589554
15	Parallel switch box 12/24V (24V only)	589029
	Parallel switch box 24/48V (48V only)	589030
Hydraulic only		
13	Hydraulic Motor Assembly 26 cc/rev	585040
	Hydraulic Motor Assembly 16.8 cc/rev	585041

8.4 Model 300TT/H - 10.8 to 15.0kW

ITEM	DESCRIPTION	PART NO
1	Motor Assembly 10.8kW 24V	587026
	Motor Assembly 15.0kW 48V	587027
2	Cover	555034
3	Black box	559003
4	Solenoid	B8429
5	Coupling	585014
6	Mounting Saddle	557025
7	Tunnel Gasket	557035
8	Hub	589755
9	Right hand propeller and washer	589750
10	Left hand propeller and washer	589751
11	Anode kit	589550
12	Plastic washer	555038
14	Installation fixings kit	589752
15	Parallel switch box 12/24V (300TT 10.8kW)	589031
	Parallel switch box 24/48V (300TT 15.0kW)	589030
Hydraulic only		
13	Hydraulic Motor Assembly 30.0 cc/rev	585040
	Hydraulic Motor Assembly 26.0 cc/rev	585041

9- Accessories

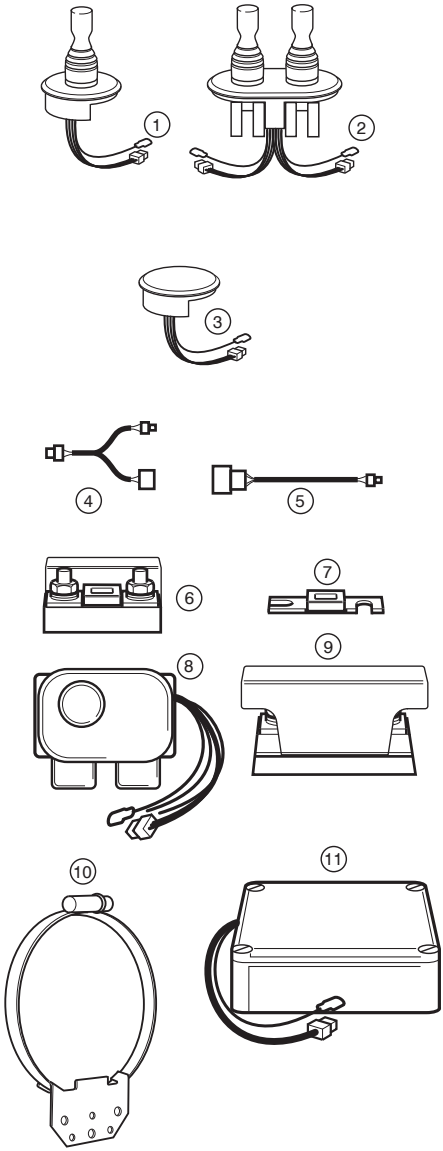

ITEM	PART NO.	DESCRIPTION
1	589002	Single Joystick Panel Controller
2	589004	Double Joystick Controller
3	589001	Touch Panel Controller
4	589025	Y Connector for Dual Controls
5	589016	7 m Control Cable & Connectors
	589017	10 m Control Cable & Connectors
	589018	14 m Control Cable & Connectors
	589019	18 m Control Cable & Connectors
	589020	22 m Control Cable & Connectors
6	589006	Fuse Holder
7	589007	130 A ANL Type Fuse
	589008	250 A ANL Type Fuse
	589009	325 A ANL Type Fuse
	589010	400 A ANL Type Fuse
	589011	500 A ANL Type Fuse
	589012	200 A ANL Type Fuse
8	589034	Automatic Battery Switch
9	589013	T2 Fuse Holder
10	589064	Motor Support Bracket Kit 185TT
	589066	Motor Support Bracket Kit 250TT
	589065	Motor Support Bracket Kit 300TT
11	589030	Parallel Switch Box 24 - 48 V
	589029	Parallel Switch Box 12 - 24 V
	589031	300TT Only Heavy Duty Parallel Switch Box 12 - 24 V

10- Dimensions

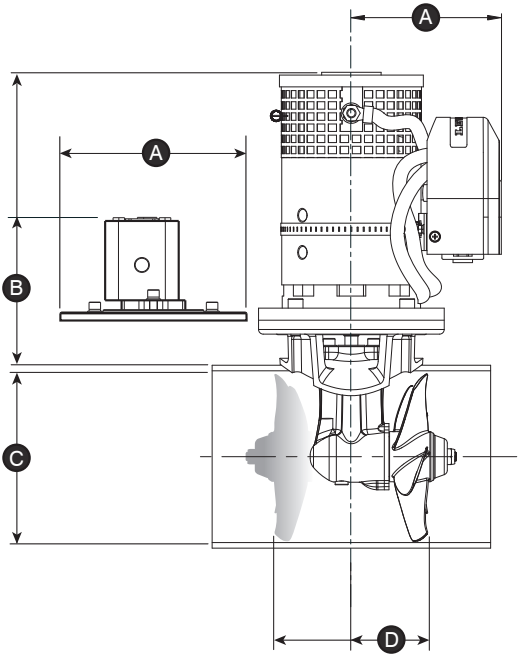

10.1 Electric

MODEL	VOLTAGE	POWER	A		B		C		D	
			mm	in	mm	in	mm	in	mm	in
140TT 2.2	12 V	2.2 kW (3.0 hp)	123	4 5/6	211	8 5/16	140	5 1/2	73	2 7/8
185TT 3.0	12 V	3.0 kW (4.0 hp)	130	5 1/8	271	10 21/32	185	7 9/32	85	3 11/32
185TT 3.0	24 V	3.0 kW (4.0 hp)	130	5 1/8	271	10 21/32	185	7 9/32	85	3 11/32
185TT 4.0	12 V	4.0 kW (5.4 hp)	148	5 13/16	294	11 9/16	185	7 9/32	85	3 11/32
185TT 4.0	24 V	4.0 kW (5.4 hp)	148	5 13/16	294	11 9/16	185	7 9/32	85	3 11/32
185TT 5.0	12 V	5.0 kW (6.7 hp)	162	6 3/8	316	12 7/16	185	7 9/32	85	3 11/32
185TT 5.0	24 V	5.0 kW (6.7 hp)	162	6 3/8	316	12 7/16	185	7 9/32	85	3 11/32
185TT 6.0	12 V	6.0 kW (8.0 hp)	173	6 13/16	316	12 7/16	185	7 9/32	85	3 11/32
185TT 6.0	24 V	6.0 kW (8.0 hp)	173	6 13/16	316	12 7/16	185	7 9/32	85	3 11/32
250TT 8.0	24 V	8.0 kW (10.8 hp)	165	6 1/2	405	15 15/16	250	9 27/32	238	9 3/8
250TT 9.6	48 V	9.6 kW (13.0 hp)	165	6 1/2	405	15 15/16	250	9 27/32	238	9 3/8
300TT 10.8	24 V	10.8 kW (14.5 hp)	203	8	450	17 23/32	300	11 13/16	320	12 19/32
300TT 15.0	48 V	15.0 kW (20 hp)	203	8	450	17 23/32	300	11 13/16	320	12 19/32

10.2 Hydraulic

MODEL	KW	HP	A		B		C		D	
			mm	in	mm	in	mm	in	mm	in
185TTH	7	10	200	7 7/8	202	7 15/16	185	7 9/32	83	3 9/32
250TTH	15	20	258	10 5/32	234	9 7/32	250	9 27/32	238	9 3/8
300TTH	22.5	30	258	10 5/32	256	10 1/16	300	11 13/16	320	12 19/32

11- Fault finding

Thrust in wrong direction?	Change contactor wires on motor solenoid (See section 4.1).
Fuse keeps blowing?	▸ Wrong fuse fitted - check rating and replace. ▸ Propeller restricted or jammed causing excessive load on motor - check and clear. Check that propeller washer is fitted see Section 3.6.
Control panel does not illuminate?	Check ▸ Power - Hold ⏻ for 1 second ▸ Battery is connected. ▸ Main switch ON, check fuse. ▸ Control loom connections. ▸ Long operation has tripped thermal switch. Wait 20 minutes for motor to cool and reset. ⚠ DO NOT attempt to cool motor by any other means.
Control panel illuminates but no thrust?	▸ Are batteries charged? ▸ Check main motor connections are tight.
Poor thrust or thrust in one direction only?	▸ Batteries not large enough or charged, cables not recommended size. Voltage at motor when running should be a minimum 10V for 12V and 21V for 24V units. ▸ Blockage in tunnel/propeller jammed with debris, switch off main power, inspect and clear. ▸ Propeller washers fitted wrong. See Section 3.6 ▸ Check motor brush springs are located properly, brushes should have good contact with the commutator.
Motor turns but no drive? (140TT and 185TT only)	⚠ DO NOT continue to run thruster. ▸ Shear pin broken, remove 4 motor bolts, see Sec. 6.2, drive out old pin and replace with new pin. ▸ Propeller blades broken. Replace with new.
Thruster noisy and vibrating?	▸ Check propeller is not touching the tunnel wall. ▸ 140-185 models - Check hub height is correct, see section 3.4.

12- Cutting template

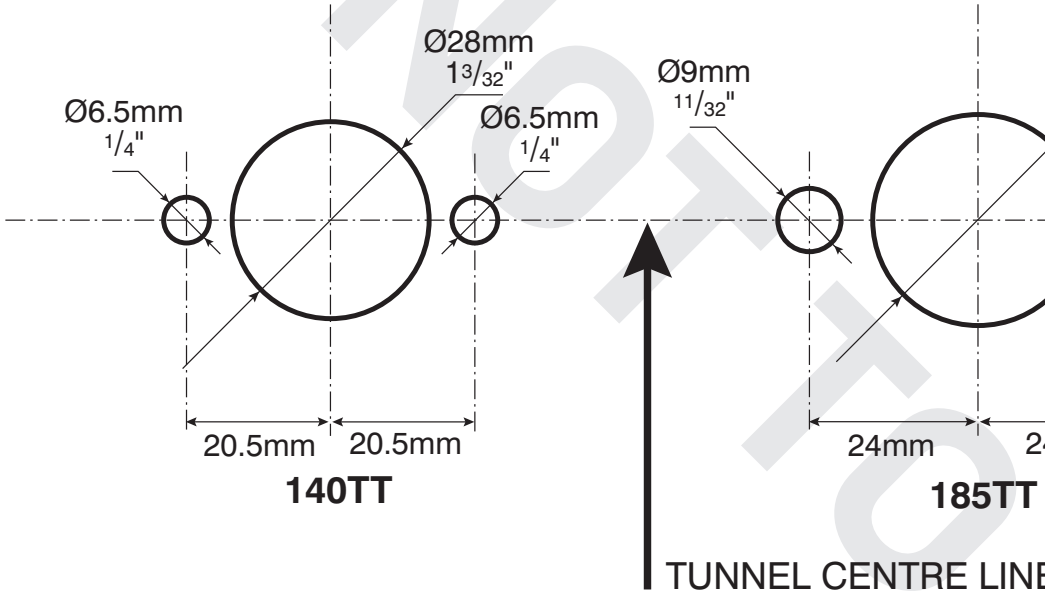

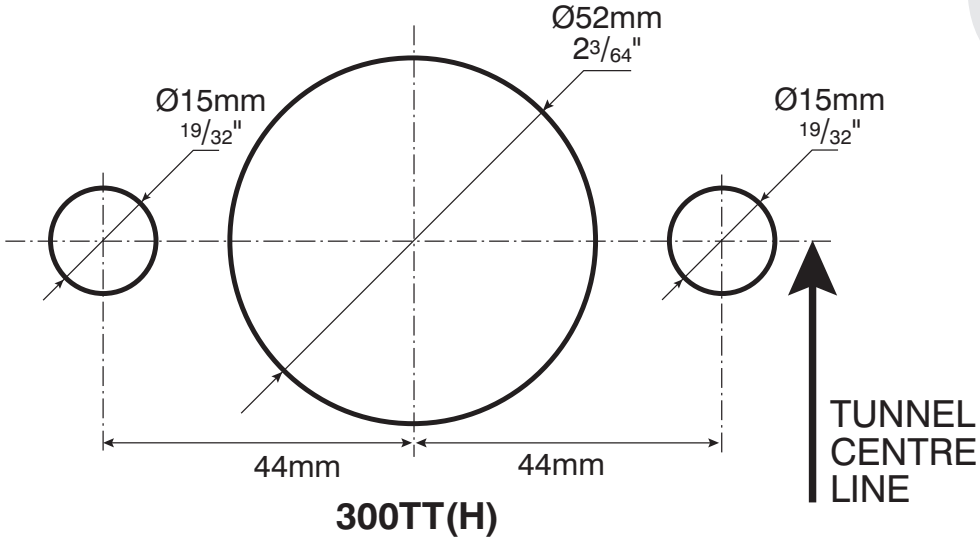

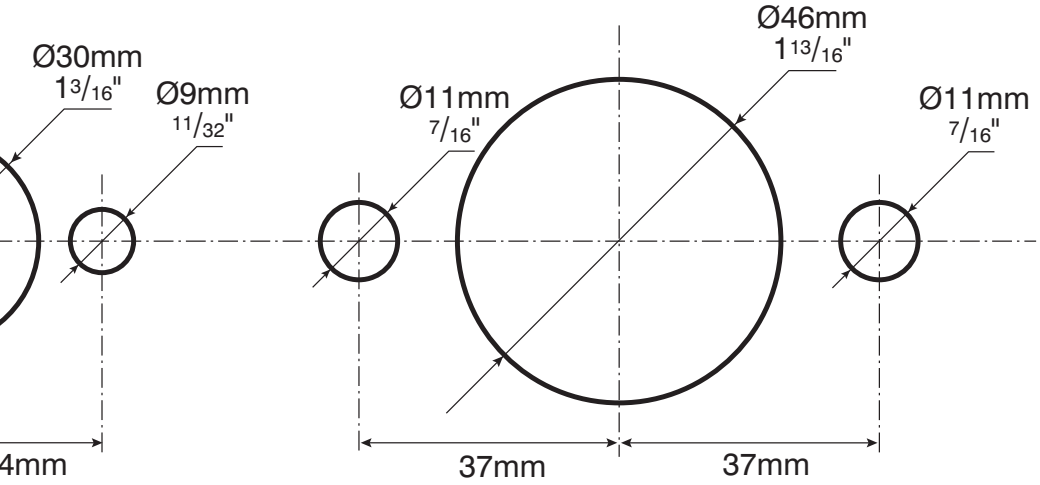

250TT(H)

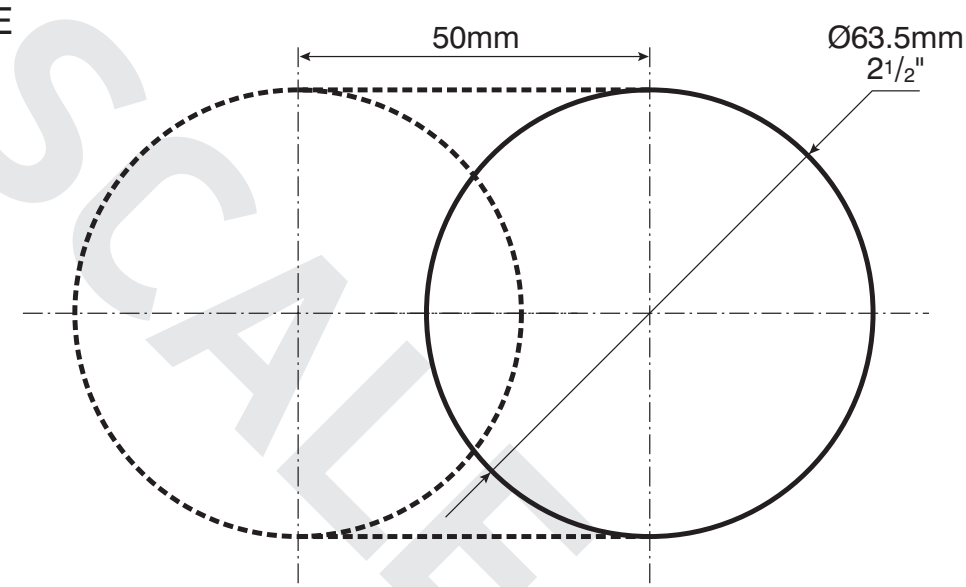

SINGLE & DOUBLE CONTROL PANEL CUTOUT

SCALE

Notes

13- Warranty

Limited Warranty and Key Terms of Supply by Lewmar

Lewmar warrants that in normal private pleasure boat usage and with proper maintenance its products will conform with their specification for a period of three years from the date of purchase by the end user, subject to the conditions, limitations and exceptions listed below. Any product, which proves to be defective in normal usage during that three-year period, will be repaired or, at Lewmar's option, replaced by Lewmar.

A CONDITIONS AND LIMITATIONS

i Lewmar's liability shall be limited to the repair or replacement of any parts of the product which are defective in materials or workmanship.

ii Responsibility for the selection of products appropriate for the use intended by the Buyer shall rest solely with the Buyer and Lewmar accepts no responsibility for any such selection.

iii Lewmar shall not be liable in any way for Product failure, or any resulting loss or damage that arises from:

a. use of a product in an application for which it was not designed or intended;
b. corrosion, ultra violet degradation or wear and tear;
c. a failure to service or maintain the product in accordance with Lewmar's recommendations;
d. faulty or deficient installation of the product (unless conducted by Lewmar);
e. any modification or alteration of the product;
f. conditions that exceed the product's performance specifications or safe working loads.
g. Abuse

iv Product subject to a warranty claim must be returned to the Lewmar outlet that supplied the product for examination unless otherwise approved by Lewmar in writing.

v This warranty does not cover any incidental costs incurred for the investigation, removal, carriage, transport or installation of product.

vi Service by anyone other than authorized Lewmar representatives shall void this warranty unless it accords with Lewmar guidelines and standards of workmanship.

vii Lewmar's products are intended for use only in the marine environment. Buyers intending to use them for any other purpose should seek independent professional advice as to their suitability. Lewmar accepts no liability arising from such other use.

B EXCEPTIONS

Cover under this Warranty is limited to a period of one year from the date of purchase by the end user in the case of any of the following products or parts of products:

- Electric motors and associated electrical equipment
- Electronic controls
- Hydraulic pumps, valves and actuators
- Hatch & Portlight weather seals
- Products used in "Grand Prix" racing applications
- Products used in commercial or charter applications
- Anchor rodes

C LIABILITY

i Lewmar's liability under this warranty shall be to the exclusion of all other warranties or liabilities (to the extent permitted by law). In particular (but without limitation):

a. Lewmar shall not be liable for:

- Any loss of anticipated turnover or profit or indirect, consequential or economic loss;
- Damages, costs or expenses payable to any third party;
- Any damage to yachts or equipment;
- Death or personal Injury (unless caused by Lewmar's negligence).

Some states and countries do not allow the exclusion or limitation of incidental or consequential damages, so the above limitation or exclusion may not apply to you

b. Lewmar grants no other warranties regarding the fitness for purpose, use, nature or satisfactory quality of the products.

ii Where applicable law does not permit a statutory or implied warranty to be excluded, then such warranty, if permitted by that state or country's law, shall be limited to a period of one year from the date of purchase by the end user. Some states and countries do not allow limitations on how long an implied warranty lasts, so this limitation may not apply to you.

D PROCEDURE

Notice of a claim for service under this warranty shall be made promptly and in writing by the end user to the Lewmar outlet that supplied the product or to Lewmar Limited at Southmoor Lane, Havant, Hampshire PO9 1JJ, England.

E SEVERANCE CLAUSE

If any clause of this warranty is held by any court or other competent authority to be invalid or unenforceable in whole or in part, the validity of the remaining clauses of this warranty and the remainder of the clause in question shall not be affected.

F OTHER RIGHTS

This warranty gives you specific legal rights, and you may also have other legal rights, which vary from state to state and country to country.

In the case of European States a Consumer customer (as defined nationally) has legal rights under the applicable national law governing the sale of Consumer Goods; this Warranty does not affect those rights.

G LAW

This warranty shall be governed by and read in accordance with the laws of England or the state or country in which the first end user is domiciled at the time of purchase of the product.

H DISPUTES

Any dispute arising under this warranty may, at the option of the end-user, be referred to alternative dispute resolution under the rules of the British Marine Federation or to the Courts of the State whose law shall govern the warranty or to the Courts of England and Wales.

The British Marine Federation may be contacted at Marine House, Thorpe Lea Road, Egham, England, TW20 8BF

UK & International Distribution

Lewmar
Southmoor Lane
Havant
Hampshire
PO9 1JJ
England

Tel: +44 (0)23 9247 1841
Fax: +44 (0)23 9248 5720
Email: info@lewmar.com

USA

Lewmar
351 New Whitfield Street
Guilford, CT
06437
USA

Tel: +1 203 458 6200
Fax: +1 203 453 5669
Email: info@lewmarusa.com

LEWMAR®

www.lewmar.com

Part No B500100 iss.6

© Copyright 2017 Lewmar Ltd. All rights reserved.