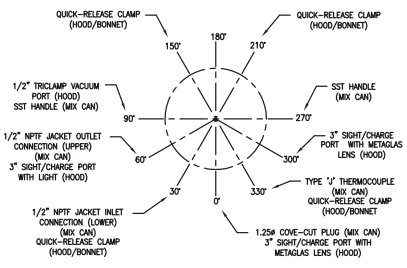

RADIAL LOCATIONS

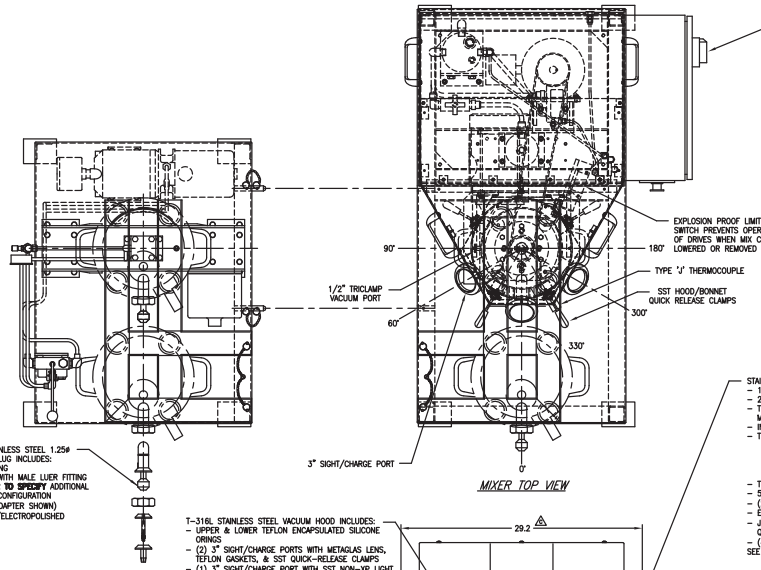

MIXER TOP VIEW

MIXER NEMA 4X OPERATOR CONTROL PANEL INCLUDES:
- INTERNALLY MOUNTED VARIABLE FREQUENCY DRIVE FOR EACH AGITATOR WITH KEYPAD EXTERNALLY MOUNTED. KEYPAD PROVIDES:
  - START/STOP CONTROLS
  - 11-112 RPM PLANETARY BLADE SPEED VARIATION
  - 500-5000 RPM DISPERSER BLADE SPEED VARIATION
  - DIGITAL DISPLAY TOGGLES BETWEEN:
    - RPM
    - PERCENTAGE OF LOAD
    - OTHER DIGITAL VALUES
- DIGITAL TEMP METER WIRED DIRECTLY TO TYPE 'J' THERMOCOUPLE
- FUSED ROTARY DISCONNECT
- EMERGENCY STOP PUSHBUTTON
- CONTROL CIRCUIT TRANSFORMER (110V)
- UNIT PREWIRED FOR CUSTOMER HOOKUP TO 230V, 3 PH, 60 Hz POWER SUPPLY (20 AMP CIRCUIT) △
- OPERATOR CONTROL PANEL TO BE SHIPPED LOOSE TO FACILITATE ENTRY THRU 30.0 DOOR △
- DETAILED TERMINATION DIAGRAM & INSTRUCTIONS TO BE PROVIDED FOR CUSTOMER SITE INSTALLATION △

EXPLOSION PROOF LIMIT SWITCH PREVENTS OPERATION OF DRIVES WHEN MIX CAN IS LOWERED OR REMOVED

T-316L STAINLESS STEEL 1.25ø COVE CUT PLUG INCLUDES:
- **VITON** ORING
- ADAPTER WITH MALE LUER FITTING
- **CUSTOMER TO SPECIFY** ADDITIONAL ADAPTER CONFIGURATION (SEMCO ADAPTER SHOWN)
- 240 GRIT/ELECTROPOLISHED FINISH

These drawings are the property of Charles Ross and Son Company and are not to be used for any other purpose unless agreed to by Ross in writing. Details indicated on the drawing reflect the equipment on order. Any revisions resulting in changes of scope or design will result in additional costs plus a change order processing charge.

ADDITIONAL DRAWINGS
☐ APPROVED
-TO BE RELEASED FOR FABRICATION.
☐ NOT APPROVED
-TO BE REVISED AND RE-SUBMITTED AS NOTED. REVISIONS MAY EFFECT DELIVERY AND PRICE.
SIGNED:_____ DATE:_____
COMPANY:_____

NOTES:

1) SUITABLE FOR VACUUM USE TO 29.5 Hg
2) AIR/OIL LIFT VERTICALLY RAISES MIX CAN INTO MIXING POSITION
3) WETTED PART SURFACES, INCLUDING MIX CAN & HOOD INTERIOR, EXTERIOR OF GEARBOX, SCRAPER ARM & AGITATORS TO BE T-316L STAINLESS STEEL, POLISHED TO 240 GRIT FINISH & ELECTROPOLISHED
4) ALL NON-STAINLESS STEEL SURFACES TO BE COATED WITH A TWO-PART EPOXY PAINT
5) ELASTOMERS TO BE TEFLON OR TEFLON ENCAPSULATED SILICONE EXCEPT PLATEN ORING & COVE PLUG ORING TO BE VITON △
6) EXPLOSION PROOF LIMIT SWITCH PREVENTS DRIVE OPERATION WHEN MIX CAN IS LOWERED OR REMOVED
7) VALIDATION PACKAGE TO BE PROVIDED AS SPECIFIED ON ORDER
8) DIMENSIONS SHOWN ARE APPROXIMATE

STAINLESS STEEL VACUUM MIX CAN INCLUDES:
- 1.5 GALLON MIXING CAPACITY △
- 2 GALLON FULL HOLDING CAPACITY △
- T-316L INNER BOWL & UPPER FLANGE INTERNALLY MACHINED FOR USE WITH ROSS DISCHARGE SYSTEM
- INTERIOR POLISHED TO 240 GRIT & ELECTROPOLISHED
- T-316L 1.25ø COVE-CUT PLUG INCLUDES:
  - **VITON** ORING
  - MALE LUER ADAPTER
  - ADDITIONAL ADAPTER **CUSTOMER TO SPECIFY** CONFIGURATION (SEMCO ADAPTER SHOWN)
- THERMOCOUPLE, LOW PROFILE, TYPE 'J', THRU CAN SIDE
- 50 PSIG T-316 SST JACKET ON SIDES & BOTTOM
- (2) SST HANDLES
- EXTERIOR POLISHED TO 80 GRIT FINISH
- JACKET INLET/OUTLET TO HAVE SST QUICK-DISCONNECT FITTINGS
- (4) SST CASTERS WITH NYLON BALL △
SEE UPPER VIEW FOR RADIAL LOCATIONS

HEAVY-DUTY T-316L STAINLESS STEEL GEARBOX INCLUDES:
- SPECIAL GEARING
- T-316 SST SUN GEAR SLEEVE
- REMOVABLE T-316L SST SCRAPER ARM WITH REPLACEABLE TEFLON SIDEWALL SCRAPER
- TEFLON AGITATOR SHAFT SEALS
- TEFLON UPPER SHAFT SEAL
- 240 GRIT/ELECTROPOLISHED EXTERIOR

PLANETARY BLADE DRIVEN BY A 1 HP, 3 PHASE, INVERTER DUTY EXPLOSION-PROOF MOTOR

T-304 STAINLESS STEEL DRIVE BONNET & COVER POLISHED TO 80 GRIT FINISH

T-316L STAINLESS STEEL HIGH SPEED DISPERSER INCLUDES:
- T-316L 3.0ø DISPERSER BLADE
- T-316L BLADE SHAFT
- 240 GRIT/ELECTROPOLISHED EXTERIOR

HIGH-SPEED DISPERSER BLADE DRIVEN BY A 2 HP, 3 PHASE INVERTER DUTY, EXPLOSION-PROOF MOTOR

NON-EXPLOSION PROOF SST TANK LIGHT INCLUDES:
- PRE-WIRED TO MAIN CONTROL PANEL
- 3" SIGHT PORT MOUNT
- MOMENTARY ON/OFF CONTROL

AIR/OIL LIFT SYSTEM FOR RAISING/LOWERING MIX CAN

T-316L STAINLESS RECTANGULAR PLANETARY & INTERCHANGEABLE HV BLADES INCLUDE:
- T-316L BLADE SHAFT
- REPLACEABLE TEFLON BOTTOM SCRAPER
- 240 GRIT/ELECTROPOLISHED EXTERIOR
- SST QUICK-RELEASE PIN

T-304 STAINLESS STEEL BASE, SHEATHING & MIX CAN PLATFORM POLISHED TO 80 GRIT FINISH

AIR/OIL LIFT SYSTEM INLET (1/4 NPTF) REQUIRES 80-100 PSI SHOP AIR

AIR/OIL CONTROLS REQUIRES TWO-HAND FOR RAISE/LOWER OPERATION

HOT WATER HEATING SYSTEM INCLUDES:
- NEMA 1 ENCLOSURE APPROX. 10" HIGH x 23" DP x 10" WIDE △
- 4 KW CAPACITY △
- 100-250 DEG F △
- 15 GPM @ 20 PSI
- 3/4" NPTF CONNECTIONS
- 1/2 HP TEFC PUMP MOTOR
- LOW PRESSURE SHUT OFF SWITCH
- HIGH TEMP SHUTDOWN SWITCH
- OPERATOR CONTROLS
- 8' LG SST BRAIDED HOSES WITH SST QUICK-DISCONNECT FITTINGS (MATES TO MIX CAN)
- UNIT MOUNTED TO BENCH LOWER △ SHELF
- 230V, 3 PH, 60 Hz POWER INPUT WITH 20 AMP CIRCUIT REQUIRED △

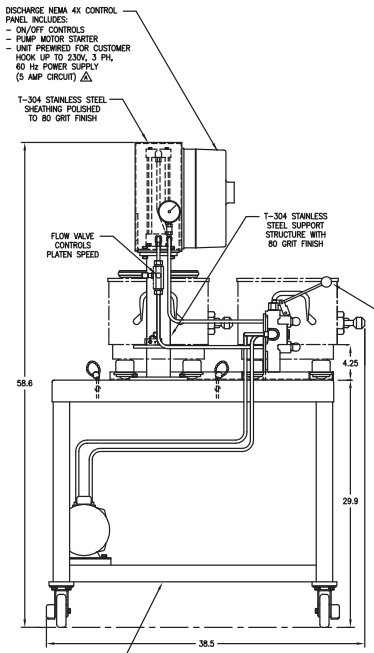

DISCHARGE SIDE VIEW

DISCHARGE NEMA 4X CONTROL PANEL INCLUDES:
- ON/OFF CONTROLS
- PUMP MOTOR STARTER
- UNIT PREWIRED FOR CUSTOMER HOOK UP TO 230V, 3 PH, 60 Hz POWER SUPPLY (5 AMP CIRCUIT) △

T-304 STAINLESS STEEL SHEATHING POLISHED TO 80 GRIT FINISH

FLOW VALVE CONTROLS PLATEN SPEED

T-304 STAINLESS STEEL SUPPORT STRUCTURE WITH 80 GRIT FINISH

HAND VALVE PAINTED WITH 2-PART EPOXY COATING CONTROLS PLATEN DIRECTION

T-304 STAINLESS STEEL BENCH INCLUDES:
- DEPTH EXTENDED 14.0 △
- BALL CASTER CHANNEL TRACKS △ WITH SST STOP PINS
- SST LOWER SHELF
- SST ALIGNMENT PINS & RETAINER PINS
- 80 GRIT FINISH
- SST CASTERS, 2 RIGID & 2 SWIVEL WITH BRAKES

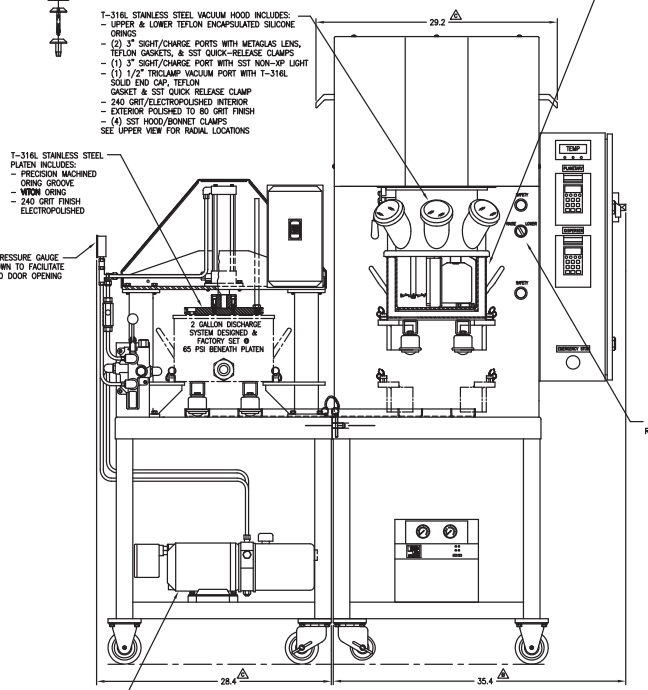

DISCHARGE FRONT VIEW
(ALIGNMENT PINS ON DISCHARGE SIDE) △

MIXER FRONT VIEW
(ALIGNMENT PINS ON MIXER SIDE) △

T-316L STAINLESS STEEL VACUUM HOOD INCLUDES:
- UPPER & LOWER TEFLON ENCAPSULATED SILICONE ORINGS
- (2) 3" SIGHT/CHARGE PORTS WITH METAGLAS LENS, TEFLON GASKETS, & SST QUICK-RELEASE CLAMPS
- (1) 3" SIGHT/CHARGE PORT WITH SST NON-XP LIGHT
- (1) 1/2" TRICLAMP VACUUM PORT WITH T-316L SOLID END CAP, TEFLON GASKET & SST QUICK RELEASE CLAMP
- 240 GRIT/ELECTROPOLISHED INTERIOR
- EXTERIOR POLISHED TO 80 GRIT FINISH
- (4) SST HOOD/BONNET CLAMPS
SEE UPPER VIEW FOR RADIAL LOCATIONS

T-316L STAINLESS STEEL PLATEN INCLUDES:
- PRECISION MACHINED ORING GROOVE
- **VITON** ORING
- 240 GRIT FINISH ELECTROPOLISHED

△ 0-1000 PSIG PRESSURE GAUGE MOUNTED AS SHOWN TO FACILITATE ENTRY THRU 30.0 DOOR OPENING

SELF-CONTAINED HYDRAULIC POWER UNIT INCLUDES:
- ALUMINUM PUMP HOUSING
- PLASTIC RESERVOIR
- STAINLESS STEEL 1/2 HP 3 PH, 230V, 60 Hz MOTOR
- MOUNTED & WIRED TO DISCHARGE CONTROL PANEL

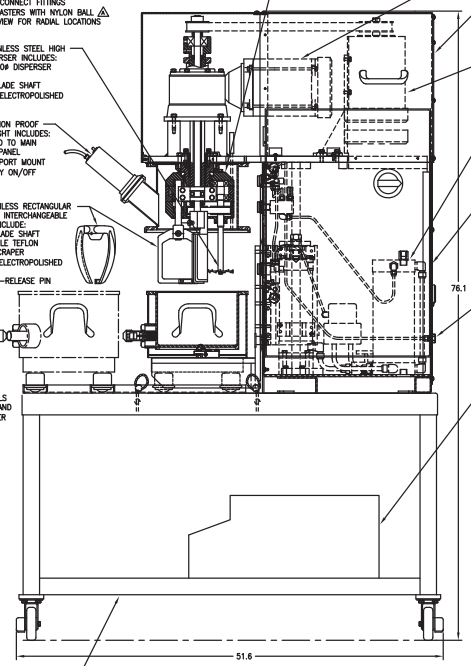

MIXER SIDE VIEW

HEAVY DUTY STAINLESS STEEL BENCH INCLUDES:
- DEPTH EXTENDED 14.0 △△
- BALL CASTER CHANNEL TRACKS △ WITH SST STOP PINS
- SST LOWER SHELF
- SST ALIGNMENT PIN RECIEVERS
- 80 GRIT FINISH
- SST CASTERS, 2 RIGID & 2 SWIVEL WITH BRAKES

NO.	DATE	REVISIONS	
C	01/16/05	REVISED PER CUSTOMER REQUEST.	BMS
B	01/14/05	REVISED PER CUSTOMER REQUEST.	BMS
A	01/10/05	REVISED PER CUSTOMER REQUEST.	BMS

TOLERANCES (Except as noted): .X ± .1 | .XX ± .03 | .XXX ± .005

ROSS MIXING, INC.
1249 S.E. Industrial Blvd Port St. Lucie, FLA.

SCALE: 3/16 | DRAWN BY: WAS | R.P.M.:

TITLE: PDM/DS-2: MAIN ASSEMBLY

DATE: 12/27/04 | S/N: 104189 | DWG. NO.: APPROVAL-C