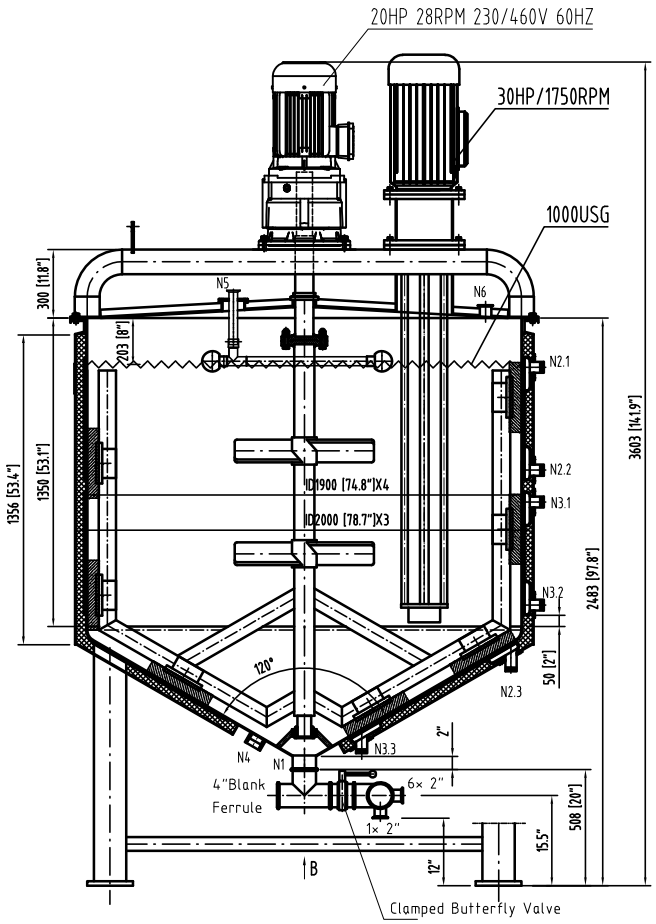

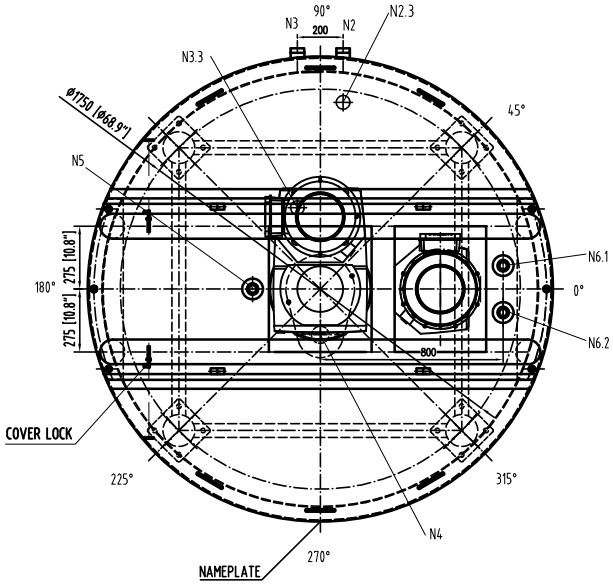

MATERIAL SCHEDULE

ITEM	QTY.	SIZE/THICK	MATERIAL	DESCRIPTION
1	4	ø159x6	S.S 304	LEG
2	2	2mm.	S.S 316L	COVER TOP
3	1	4mm.	S.S 316L	SHELL
4	1	4mm	S.S 316L	**BOTTOM CONE**
5	3	2mm	S.S 304	**JACKET**
6	1	3mm	S.S 304	**OUTSIDE SHELL**

NOZZLE SCHEDULE

ITEM	QTY.	MATERIAL	SIZE	DESCRIPTION
N1	1	316L S.S	4" TC	OUTLET
N2	3	304 S.S	1.5" NPT	JACKETED INLET
N3	3	304 S.S	1.5" NPT	JACKETED OUTLET
N4	1	316L S.S	1-1/4"UNC	THERMOWELL
N5	1	316L S.S	1.5"/3"TC	CIP
N6	2	316L S.S	2"TC	Return / Liquid inlet port

SANITARY QUICK-CONNECT DISTRIBUTION PIPE

NOT TO SCALE

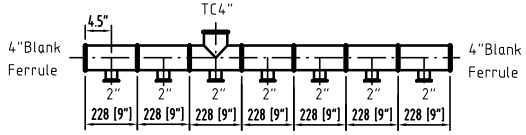

CATEGORY A,B WELDING JOINT

NOT TO SCALE

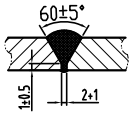

NOZZLE WELDING JOINT

NOT TO SCALE

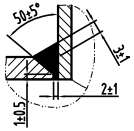

DIMPLE JACKET WELDING JOINT

NOT TO SCALE

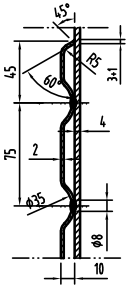

STANDARD INFORMATION & NOTES

DESIGN PRESSURE & TEMP.:	VESSEL: ATMOSPHERIC @ AMBIENT JACKET: 75PSI@308°F
HYDRO TEST AT AMBIENT:	JACKET: 99PSI
WORKING TEMPERATURE:	JACKET: 308°F
SHOP TOLERANCE: ±1/8"	
APPROX. EMPTY WEIGHT: ≈	
FINISH:	INTERIOR: 316L S.S. SURFACES - #4 SANITARY FINISH (3A STANDARD-Ra RANGE 23-32) WELDS - GROUND SMOOTH & FLUSH TO #4 SANITARY FINISH (3A STANDARD-Ra RANGE 23-32) EXTERIOR: 304 S.S. SURFACES - #4 SANITARY FINISH WELDS-STRIPE BUFFED W/ DISCORLORATION REMOVED
ASME CERTIFIED :YES, WITH U DESIGNATOR , FOR JACKET ONLY	
PASSIVATION REQ'D.: NA	
DRIVE: 20HP@28 RPM, 230/460V, 60HZ;30HP 1750RPM 230/460V 60HZ	

SCRAPER BLADE HOLDER

NOT TO SCALE

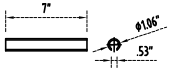

SCRAPER BLADE ISOMETRIC VIEW

Not to scale

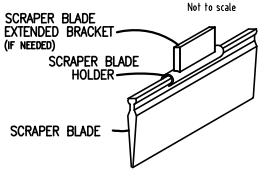

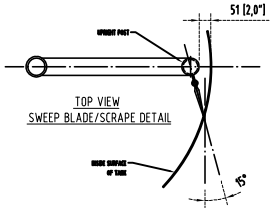

VIEW B

Not to scale

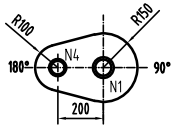

SHAANXI HONGDA INDUSTRY CO., LTD			
PREPARED BY	1000USG Jacketed Mixing Tank	DRAWING NO.	25-1117-02-HA
		PROJECT NUMBER	25-1117-02-HA
CHECKED BY		GENERAL DRAWING	
APPROVED BY	SCALE 1:12 WEIGHT	REV 3	TOTAL: 1 PAGE : 1