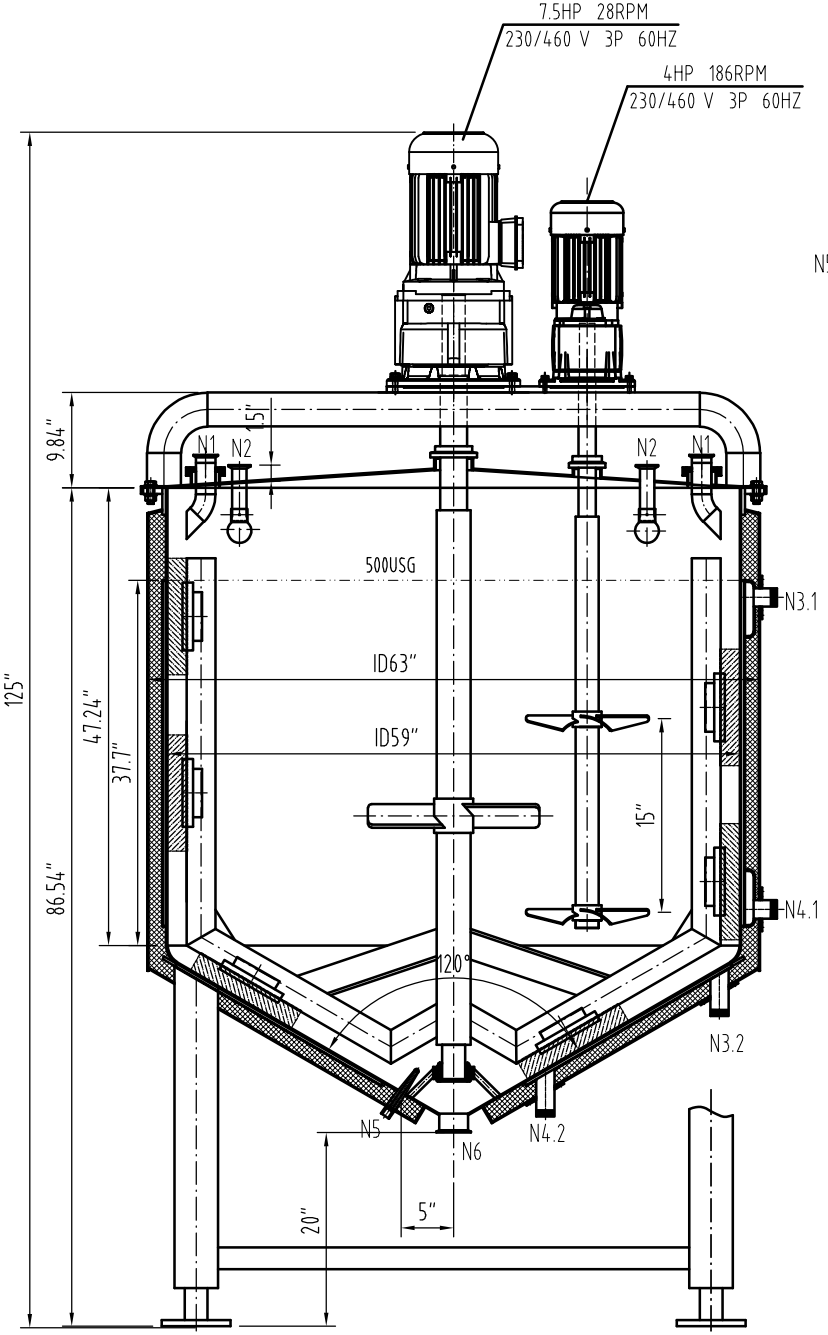

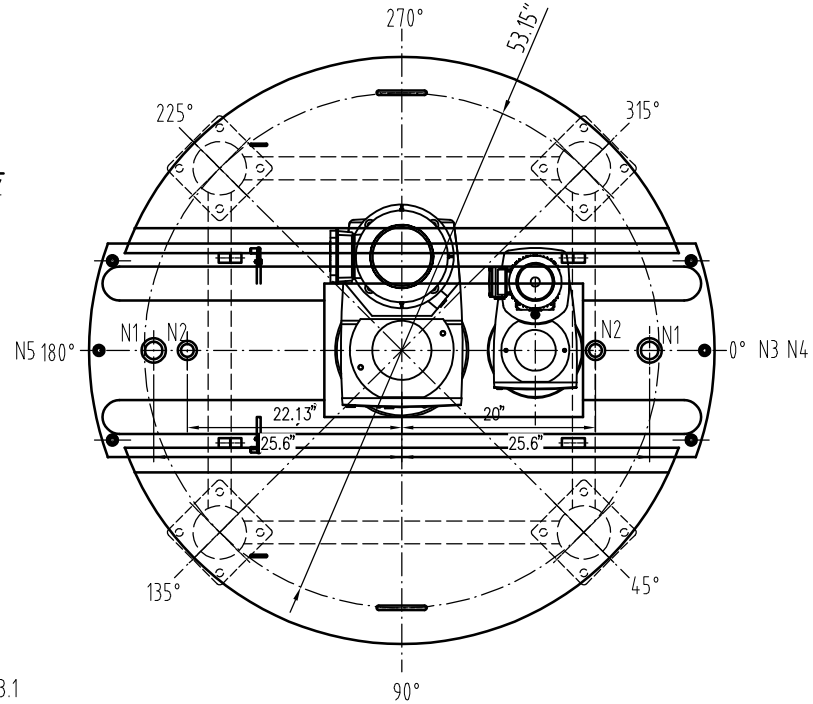

Category A,B welding joint

Not to scale

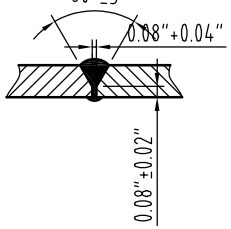

nozzle welding joint

Not to scale

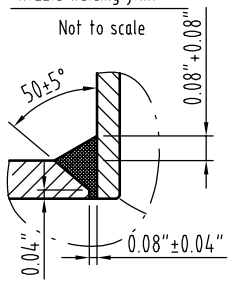

DIMPLE JACKET WELDING JOINT

NOT TO SCALE

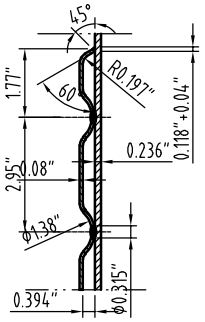

DESIGN DATA SHEET

CODE	ASME BPVC SECTION VIII DIUISION I 2025 EDITION.

		SHELL	JACKET	ASME STAMP		YES,WITH U DESIGNATOR FOR JACKET ONLY	
FLUID			STEAM	WELDING ROD TYPE		AS PER WPS	
FLUID PERFORMANCE		Non lethal	Non lethal	WELDING REGULATION		NOTE 2	
WORKING TEMPERATURE	°F	≤365	≤365	WELD STRUCTURE		COMPRESSION STRUCTURE ADOPTS FULL PENETRATION	
WORKING PRESSURE	Psi	0	≤150	THICKNESS OF FILLET WELD EXCEPT NOTED		AS PER THE THICKNESS OF THINNER PLATE	
DESIGN TEMPERATURE	°F	365	365	PRESSURE TEST TEMPERATURE	°F	41-115	
MDMT	°F	-20	-20°F AT150Psi	N.D.E.	WELDING JOINT CATEGORY	METHOD-EXRATE	ACC. STD.
DESIGN PRESSURE	Psi	0	150Psi AT 365°F		A,B	SPOT RT UW-11(b)	UW-52
MAWP	Psi	0	150Psi AT 365°F		C,D		
CORROSION ALLOWANCE	in	0		TOTAL CAPACITY	Gal	600	
JOINT EFFICIENCY Shell/ head		0.85/0.85		IMPACT TEST		Exemped per UHA-51	
HYDRO. TEST PRESSURE	Psi	197		HEAT TREATMENT		Exemped per UHA-32, UHA-44	
GAS LEAKAGE TEST PRESSURE	Psi	NA		MASS	NET MASS FOR EQUIP.		
NOZZLE ORIENTATION		AS PER THIS DRAWNING			OPERATING MASS		
MATERIAL FOR MAIN PRESSURE PARTS		SA-240 304 SA-240 316L SA-312 TP304			FULL WATER MASS		
FULL COEFFICIENT				INSULATION THICKNESS	in		

MARK	NOMINAL SIZE	QTY.	CONNECTING SIZE AND STANDARD	FACE	SERVICE	REMARKS
N1	1.5"/3"	2	3A	TC	INLET	
N2	1.5"	2	3A	TC	CIP	
N3	1.5"	2	ASME B1.20.1-2013	1.5"NPT	STEAM INLET	
N4	1.5"	2	ASME B1.20.1-2013	1.5"NPT	STEAM OUTLET	
N5	1/2"	1		1/2"FNPT	THERMOWELL	
N6	3"	1	3A	TC	OUTLET	

Technical Requirement

1.Having a carbon content not exceeding 0.10% and produced with filler metals conforming to sfa-5.9.

2.Unless otherwise specified,all the groove welding joints for pressure parts are of full penetration type, continuous, and shall be welded as per the wps designated by jic; Finished longitudinal and circumferential joints conform to UW-35.

3.Unless otherwise specified, does not indicate the size tolerance and see the program file Q/HD-PD-03-2011.

4.Interior finish : Ra0.8,Exterior finish: Ra0.8,

5.The user shall be in charge for installing safety devices in outer pipe system connected to this tank, and to ensure the pressure in the tank not exceeding its MAWP pressure;

6.This equipment's packing and transportation shall conform to the regulation of [Pressure Vessel Coating and Transportation Packing] ,JB4711-2003.

REV.NO.	DESCRIPTION	PREPARED BY	CHECKED BY	APPROVED BY	DATE
3					
2					
1					

SHAANXI HONGDA INDUSTRY CO., LTD

PREPARED BY		500USG mixing tank	
CHECKED BY			
APPROVED BY		SCALE 1:7	WEIGHT

DRAWING NO.	Inlention-26-0219-04-HA_500
PROJECT NUMBER	26-0219-04-HA
GENERAL DRAWING	
REV 1	TOTAL: 1 PAGE : 1