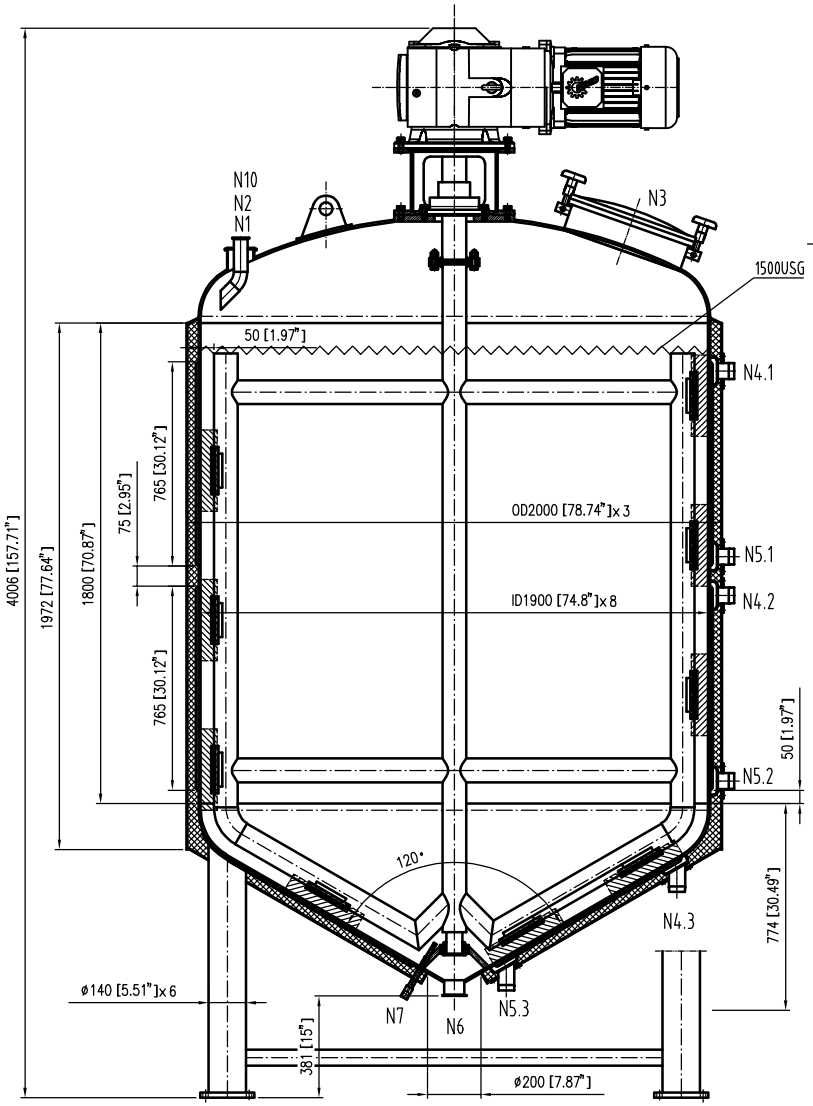


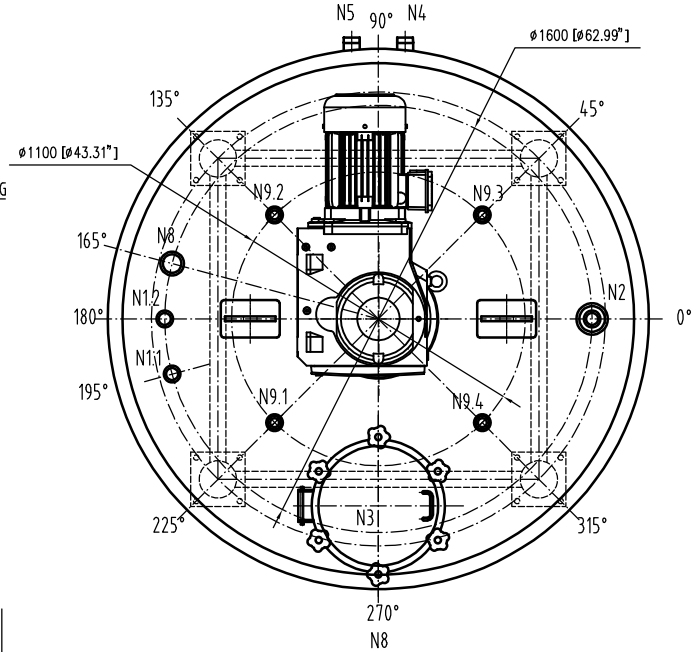


## DIMPLE JACKET WELDING JOINT

NOT TO SCALE

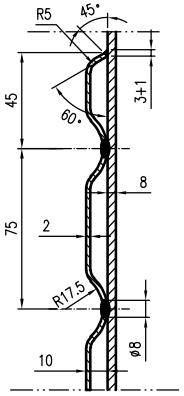


## MATERIAL SCHEDULE

| ITEM | QTY. | SIZE/THICK | MATERIAL | DESCRIPTION |
|---|---|---|---|---|
| 1 | 1 | 8mm | 316L S.S | DISH TOP |
| 2 | 1 | 8mm | 316L S.S | INNER SHELL |
| 3 | 1 | 8mm | 316L S.S | INNER CONICAL HEAD BOTTOM |
| 4 | 3 | 2mm | 304 S.S | DIMPLE JACKET |
| 5 | 1 | 3mm | 304 S.S | OUTSIDE SHELL |
| 6 | 4 | ø140x6mm | 304 S.S | LEG |

## NOZZLE SCHEDULE

| ITEM | QTY. | MATERIAL | SIZE | DESCRIPTION |
|---|---|---|---|---|
| N1 | 2 | 316L S.S | 2"T.C | INLET |
| N2 | 1 | 316L S.S | 2"/4"T.C | INLET NO-FOAM |
| N3 | 1 | 316L S.S | 18" FLAT | MANWAY |
| N4 | 1 | 304 S.S | 2"NPT | JACKET INLET |
| N5 | 1 | 304 S.S | 2"NPT | JACKET OUTLET |
| N6 | 1 | 316L S.S | 3"T.C | OUTLET |
| N7 | 1 | 316L S.S | 1 1/4" UNC | Temperature sensor |
| N8 | 1 | 316L S.S | 3"T.C | INLET |
| N9 | 4 | 316L S.S | 1.5"/3" TC | CIP |

## STANDARD INFORMATION & NOTES

| | |
|---|---|
| DESIGN PRESSURE & TEMP.: | VESSEL: -15/40psi@350°F<br>JACKET: 120psi@350°F |
| HYDRO TEST AT AMBIENT: | VESSEL: 60psi<br>JACKET: 170psi |
| WORKING TEMPERATURE: | VESSEL: 345 °F<br>JACKET: 345 °F |
| SHOP TOLERANCE: ±1/8" | |
| APPROX. EMPTY WEIGHT: | |
| FINISH:<br>INTERIOR: 316L S.S. SURFACES - #4 SANITARY FINISH (3A STANDARD-Ra RANGE 30)<br>WELDS - GROUND SMOOTH & FLUSH TO #4 SANITARY FINISH) (3A STANDARD-Ra RANGE 30)<br>EXTERIOR: 304 S.S. SURFACES - #4 SANITARY FINISH (3A STANDARD-Ra RANGE 30)<br>WELDS-STRIPE BUFFED W/ DISCOLORATION REMOVED | |
| CODE: ASME BPVC SECTION VIII DIVISION I 2025 EDITION<br>ASME CERTIFICATE MARK: YES (FOR JACKET ONLY) | |

| REV.NO. | DESCRIPTION | PREPARED BY | CHECKED BY | APPROVED BY | DATE |
|---|---|---|---|---|---|
| 3 | | | | | |
| 2 | | | | | |
| 1 | | | | | |

SHAANXI HONGDA INDUSTRY CO., LTD

DESIGN STAGE

DRAWING NO.

PROJECT NUMBER 26-0806-01-HA

GENERAL DRAWING

PREPARED BY

CHECKED BY

APPROVED BY

1500USG MIXER TANK

SCALE 1:10 WEIGHT

REV 0 TOTAL 1 PAGE 1