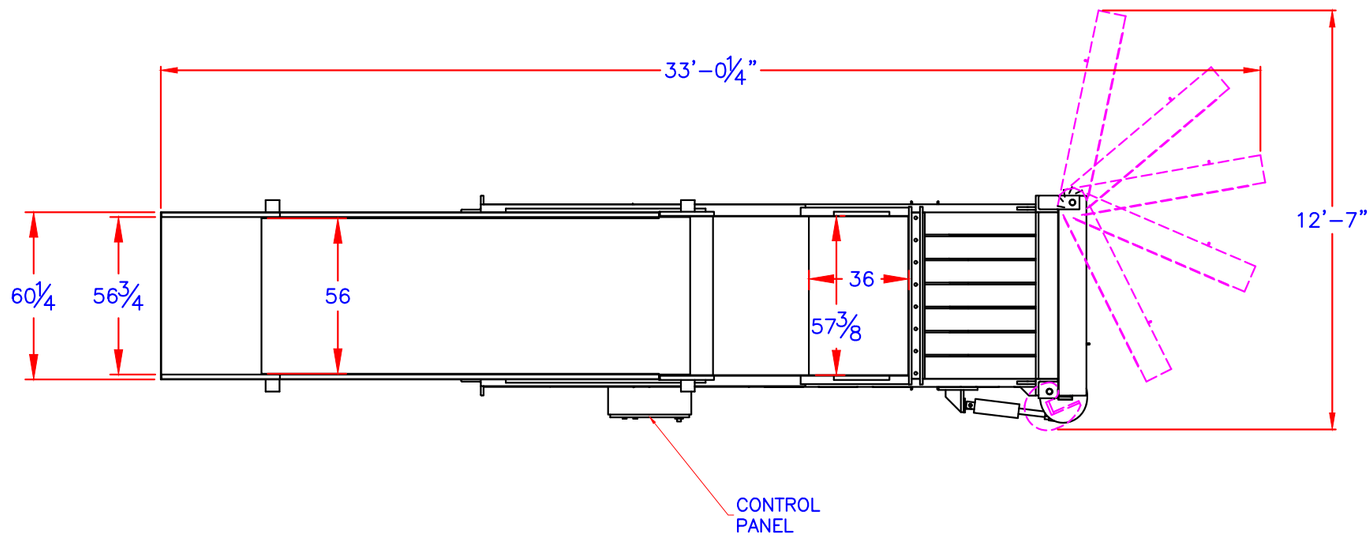

THIS BALER REQUIRES 5' OF CLEARENCE FOR DOOR SWING.

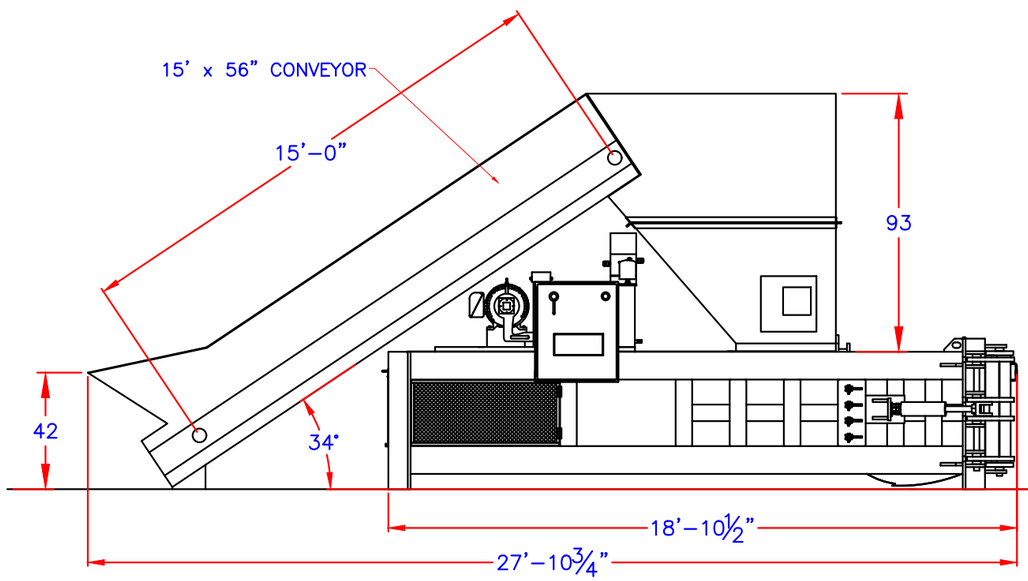

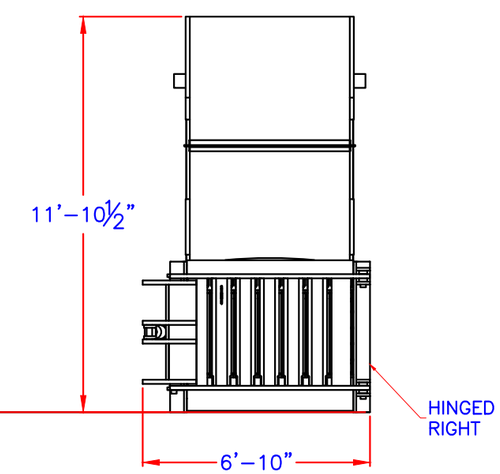

DIMENSIONS SUBJECT TO ENGINEERING CHANGES.

UNLESS OTHERWISE SPECIFIED: DIMENSIONS ARE IN INCHES TOLERANCES

±1" NOMINAL

THIS DRAWING IS THE EXCLUSIVE PROPERTY OF WASTE PROCESSING EQUIPMENT, INC. ITS ACCEPTANCE CONSTITUTES AN AGREEMENT THAT IT SHALL BE TREATED AS A STRICTLY CONFIDENTIAL DOCUMENT AND IS NOT TO BE COMMUNICATED, DISCLOSED, OR COPIED UNLESS AUTHORIZED BY WASTE PROCESSING EQUIPMENT, INC.

COMPANY NAME:	SHIPPING HEIGHT	8'-0"	
APPROVED BY:	SHIPPING WIDTH	7'-0"	
DATE:	SHIPPING LENGTH	48'-0"	
VOLTAGE/PHASE:	INITIAL		
RETURN TO: sam@maxpakbalers.com FAX# (256)-638-7741	DRAWN BY: GT	DATE DRAWN: 4/10/18	

MAX-PAK
WASTE PROCESSING EQUIPMENT, INC.
260 DILBECK ROAD, P.O. BOX 1047
RAINSVILLE, ALABAMA 35986

TITLE: HCE 60FE-8 SYSTEM

SERIAL NO.

DWG. NO. HCE60FE-8 SYSTEM-RH