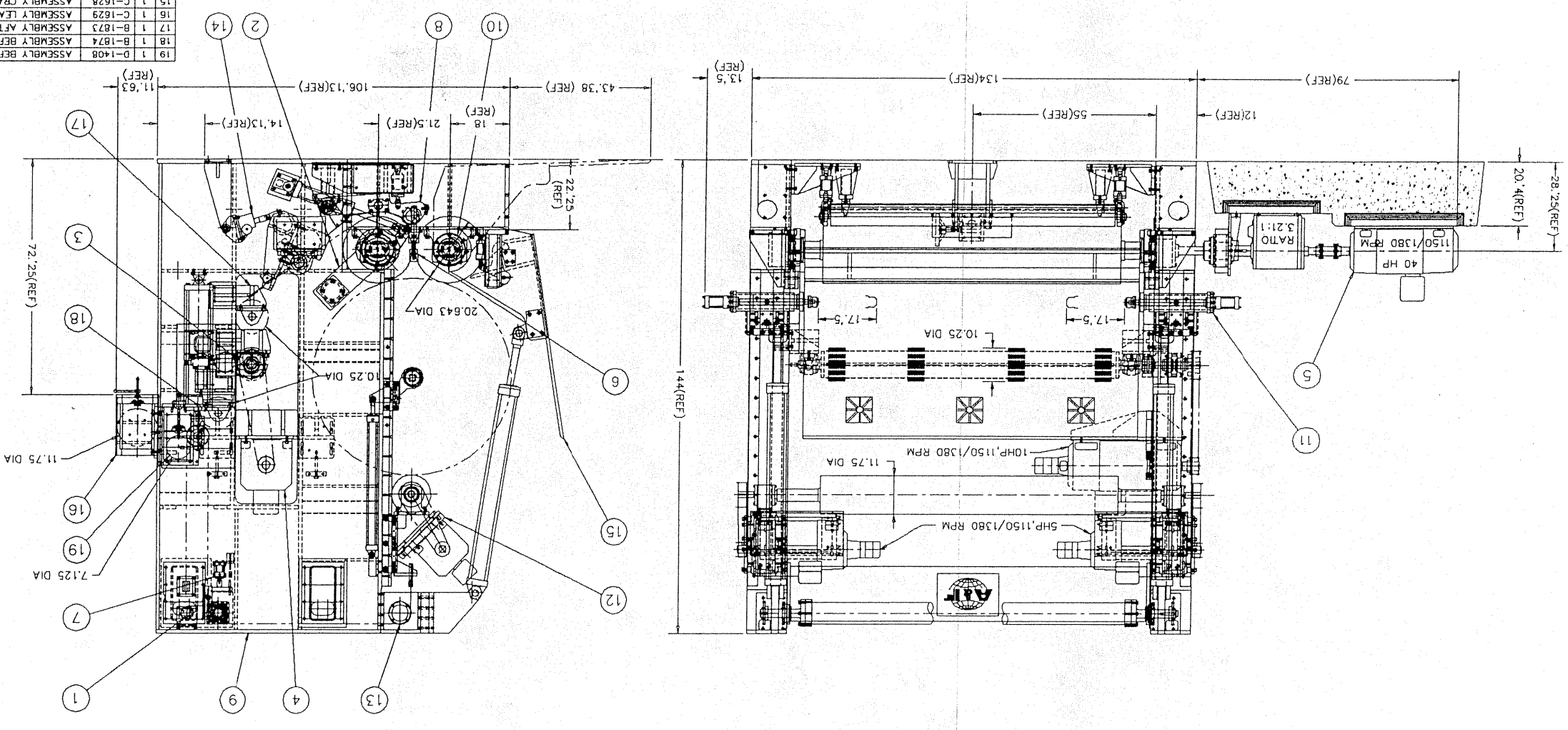

NOTE:
ITEM 11 IS SHOWN OUT OF POSITION FOR CLARITY.

MACHINE PARAMETERS

MAX.WEB WIDTH:	84"
MIN.WEB WIDTH:	44"
ROLL FACE:	90"
BAL.SPEED:	3000 FPM
OPER.SPEED:	2000 FPM
MAX.TENSION:	7 PLI
MIN.TENSION:	2 PLI
REWIND DIA.:	60"
HAND:	LEFT
MATERIAL:	100% COTTON FINE PAPER
BASIS WEIGHT:	20-67/1300 FT.2
PAINT:	SPECIAL

REV	DATE	BY	DESCRIPTION

A & F CORPORATION
THIS DRAWING IS THE PROPERTY OF, AND IS ON LOAN FROM A & F CORP., AND IS SUBJECT TO RETURN UPON REQUEST. IT SHALL BE USED FOR ONLY INTERNAL MAINTENANCE AND MODIFICATION OF A & F CORP. AND SHALL NOT BE DUPLICATED TO ANY PERSON EXCEPT AS AUTHORIZED BY CONTRACT WITH, OR PERMISSION OF A & F CORP.

TOLERANCES TO APPLY ONLY FOR MACHINED SURFACES
DIM SHOWN AS TOL.

X.	X.XXX ±.040
X.XX	X.XX'XX ±.020
X.XX	X.XX'X ±.010
X.XXX	X.XXX'X ±.005

MTLS:

A. & F. CORP.
PHILA., PA

MAIN ASSEMBLY
WINDER

SCALE 1:16
DATE 4/12/94
DRWN BY CYP
FOB: OLD DOVSHIRE MILL
APP'D BY:

DRAWING NO. D-1411
REV.

ITEM	QTY.	DRAWING NO.	DESCRIPTION
1	1	B-1851	ASSEMBLY RIDER ROLL POTENTIOMETER
2	1	B-1850	ASSEMBLY ROLL EJECTOR
3	1	B-1636	ASSEMBLY SLITTER
4	1	D-1404	ASSEMBLY SLITTER DRIVE
5	1	D-1379	ASSEMBLY DRUM DRIVE
6	2	B-1849	ASSEMBLY SHAFTLESS CHUCK STOP
7	1	B-1853	ASSEMBLY RIDER ROLL LATCH (E-STOP)
8	1	C-1619	ASSEMBLY THREADER
9	1	C-1611	ASSEMBLY FRAME
10	1	C-1613	ASSEMBLY DRUM BEARINGS
11	2	C-1615	ASSEMBLY SHAFTLESS CHUCK
12	1	C-1616	ASSEMBLY RIDER ROLL
13	1	C-1630	ASSEMBLY RIDER ROLL LIFT & SYNC.SHAFT
14	1	D-1378	ASSEMBLY AFTER SLITTER SPREADER
15	1	C-1628	ASSEMBLY CRADLE
16	1	C-1629	ASSEMBLY LEAD-IN ROLL
17	1	B-1873	ASSEMBLY AFTER SLITTER ROLL
18	1	B-1874	ASSEMBLY BEFORE SLITTER TENSION ROLL
19	1	D-1408	ASSEMBLY BEFORE SLITTER SPREADER ROLL

93-1362