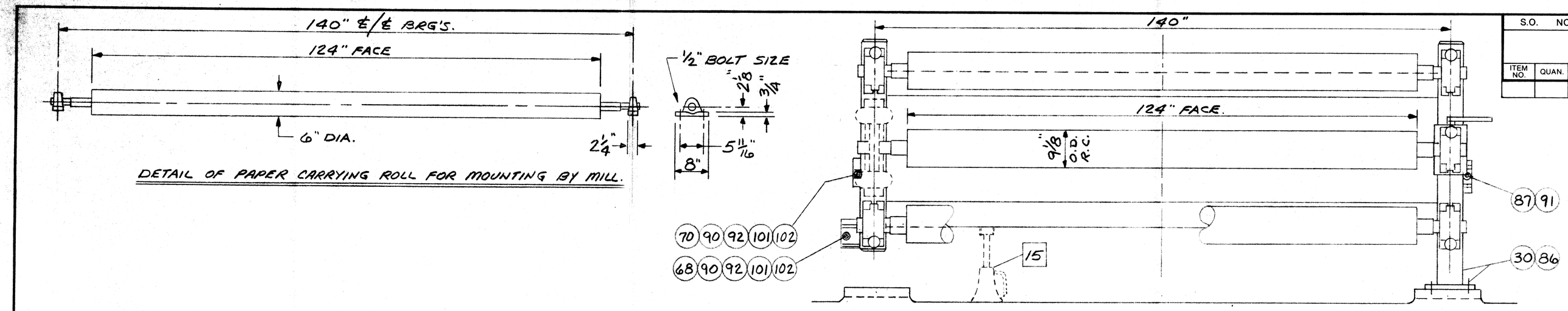

DETAIL OF PAPER CARRYING ROLL FOR MOUNTING BY MILL.

VIEW "D-D."

S.O. NO.			NO. REQ'D.	TITLE:		B.M. No.			REV.
				CUSTOMER:	ISSUED BY:	BM- D-			
				LC.—	SHEET OF				
ITEM NO.	QUAN.	TOTAL QUAN.		DESCRIPTION		DRAWING NO.	S.	P.O.	VENDOR

PROD. | INV. | PROC. | ACCT. | PURCH. | ENG. | PROD. | REC. | S.O.F.

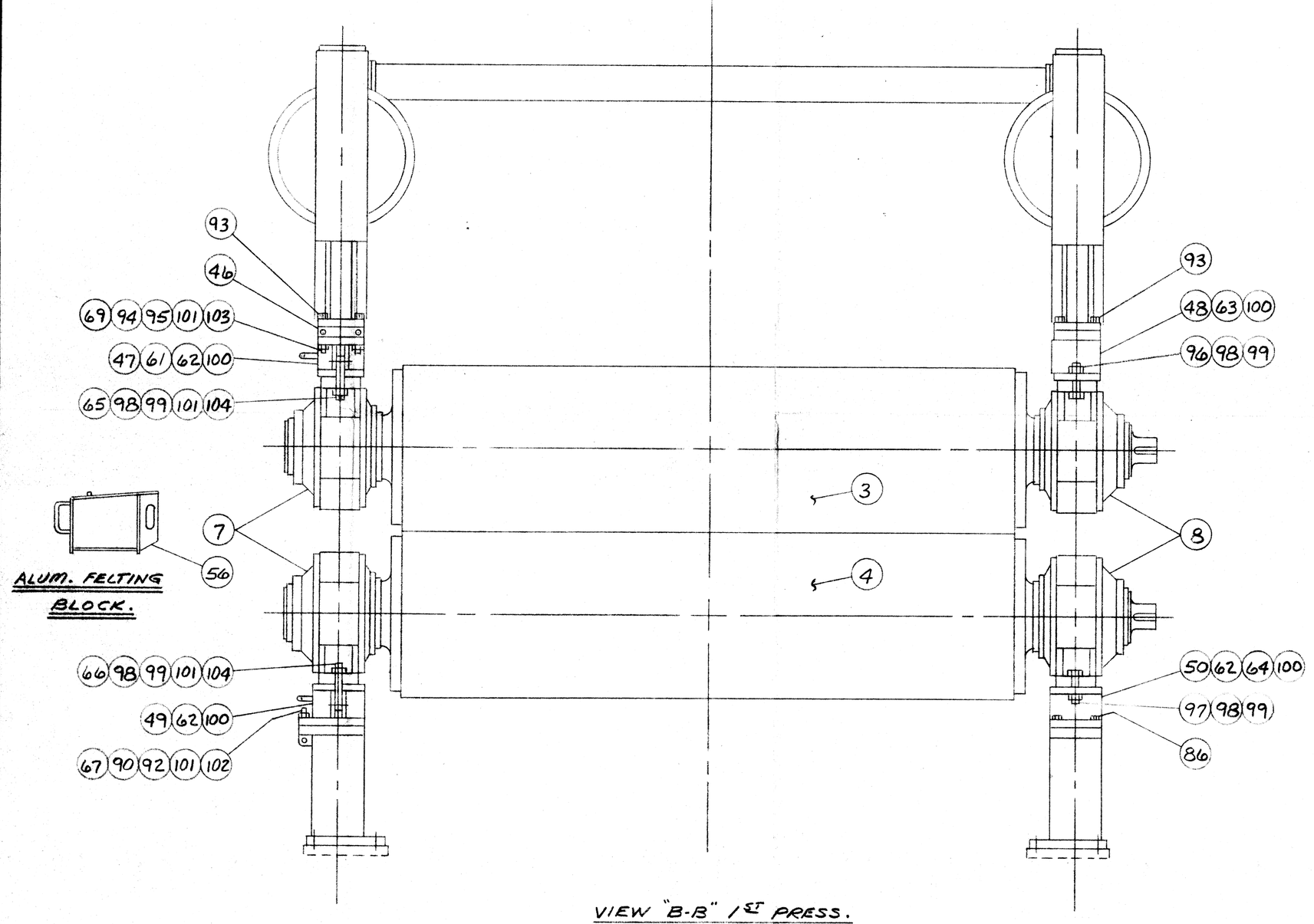

ALUM. FELTING BLOCK.

VIEW "B-B" 1ST PRESS.

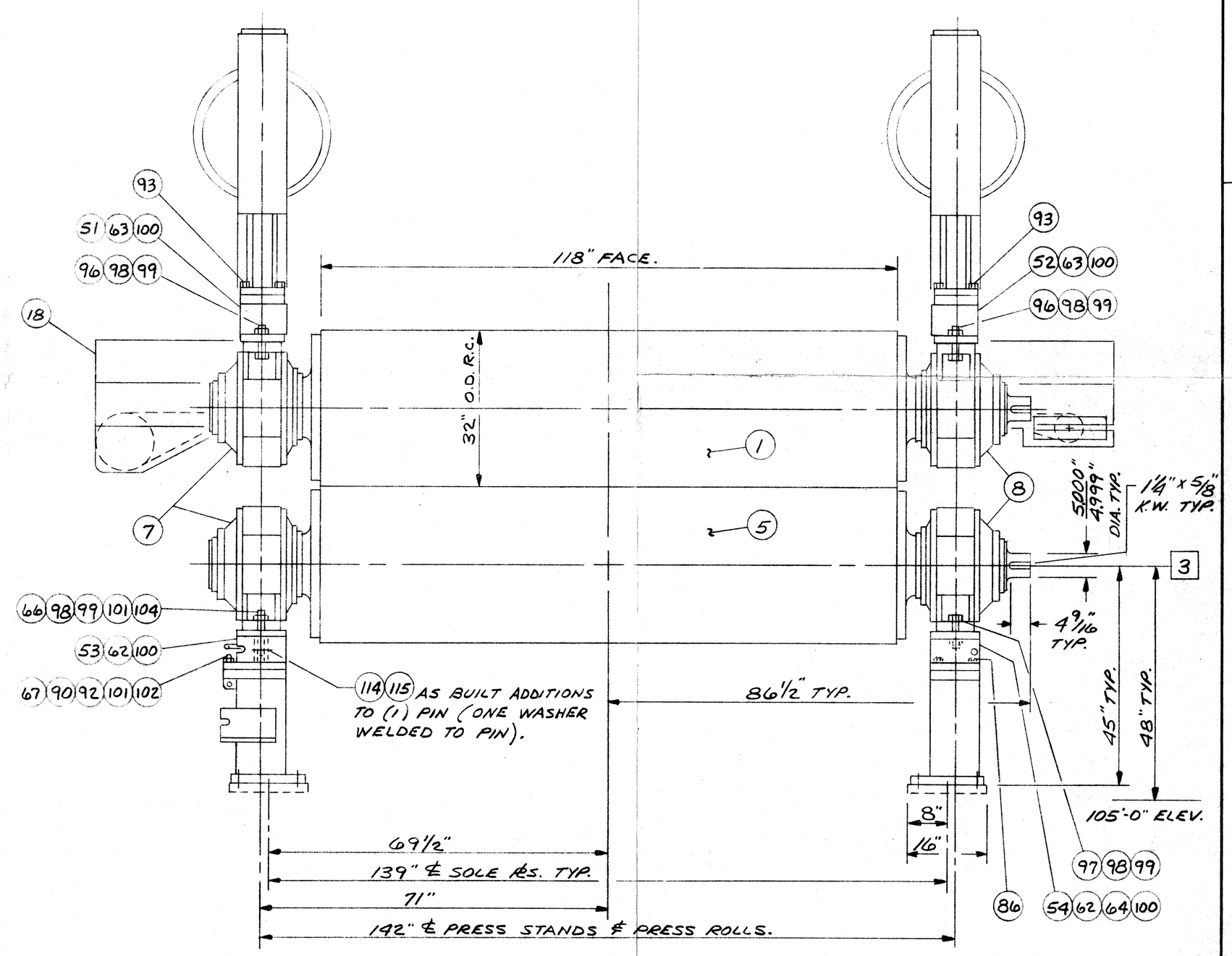

VIEW "C-C" 2ND PRESS.

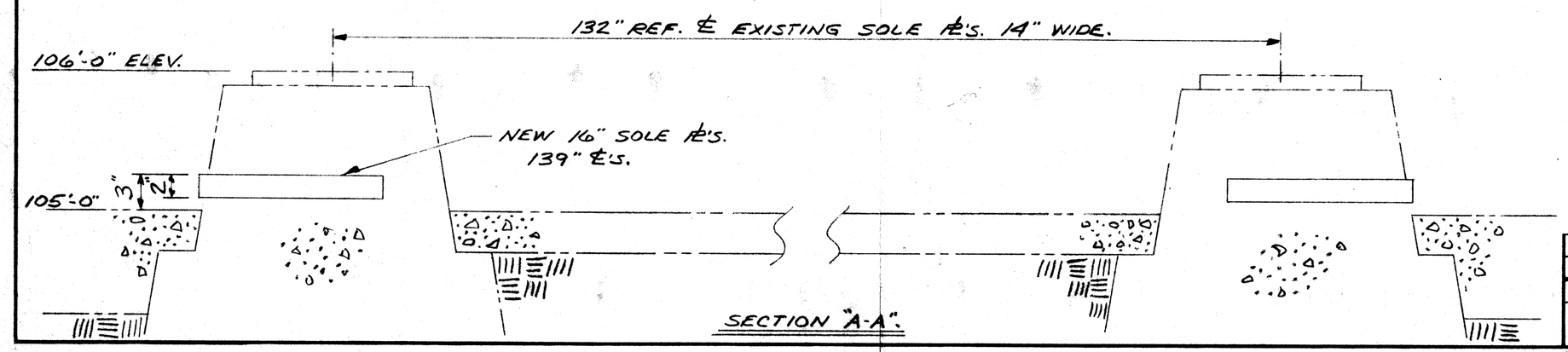

SECTION "A-A".

4-18-86	MRS	COMPLETED DWG.
3/12/86	MRS	DRIVE STUB WAS 4 1/2" LG.

REVISIONS

THIS DRAWING AND ITS CONTENTS ARE THE PROPERTY OF LG IND. AND MAY NOT BE REPRODUCED WITHOUT PERMISSION

MACHINING TOLERANCES UNLESS OTHERWISE SPECIFIED
FRAC. DIM. ± 1/32" ANGLES ± 1/2"
DEC. DIM. X.XX ± .020"
DEC. DIM. X.XXX ± .005"
√ = 125 √ FINISH
BREAK ALL SHARP EDGES

LG INDUSTRIES INC.
COATESVILLE, PA 19320 U.S.A.

FOR ASS'Y. SEE DWG.

1ST & 2ND MAIN PRESS SECTION
U.S. GYPSUM CO., GYPSUM, OHIO

SCALE: 3/4" = 1'2	DWN. BY: MRS	DRAWING NO.	REV.
RGH. WT.:	DATE: 2-11-86	D-9235 2 OF 3	B
FIN. WT:	CHK'D. BY:		

AUG 13 1986