FOR ENGINEERING REFERENCE

CHECK ONE	BANK SIZE	EMPTY WEIGHT (W/O CLEANERS) LBS (Kg)	OPERATING WT (W/CLEANERS) LBS (Kg)	CONNECTION SIZE (NOTE #10)			
				FEED	ACCEPT	REJECT	ELUTRIATION
✓	4	540 (246)	840 (382)	6"	6"	4"	2" NPT
	8	570 (259)	1050 (477)				

NOTICE

SULZER PAPERTEC ASSUMES NO RESPONSIBILITY FOR DESIGN OF SUPPORTS, FOUNDATIONS, STRUCTURAL AND CONCRETE WORK OR ANY OTHER MATERIAL AND EQUIPMENT NOT SUPPLIED BY IT.

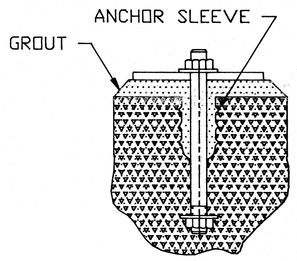

ENLARGED VIEW RECOMMENDED ANCHOR BOLT DESIGN

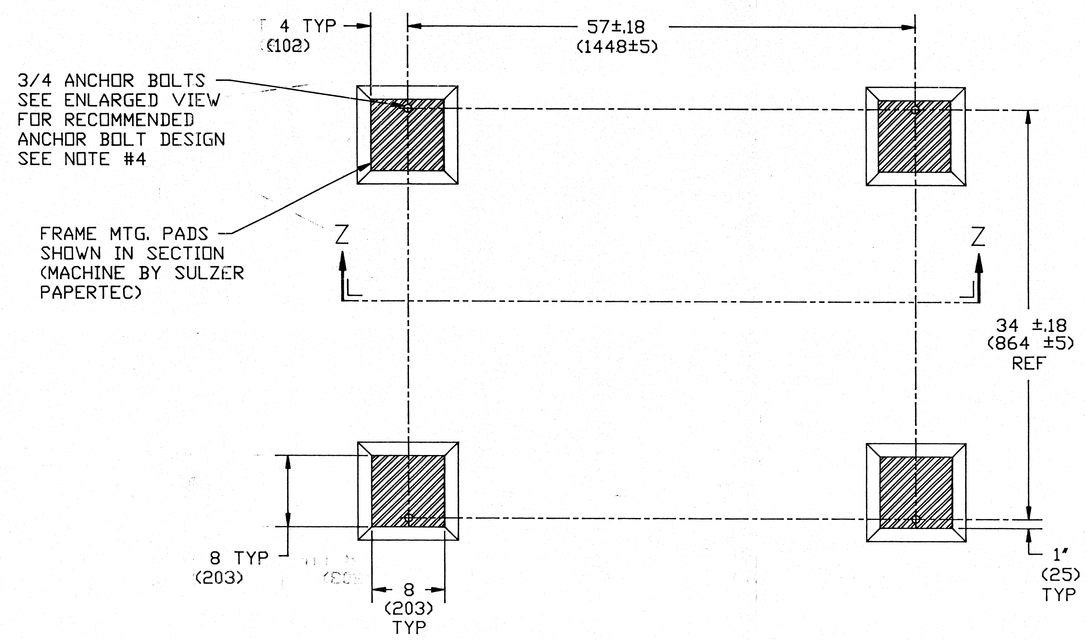

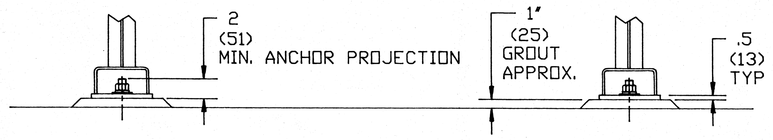

VIEW Z-Z

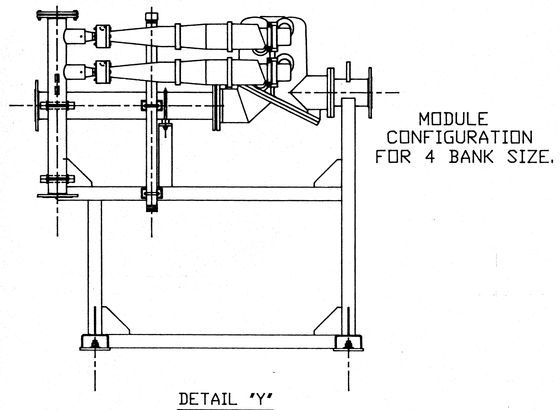

DETAIL "Y"

WEIGHT OF INDIVIDUAL CLEANER		
CONE MATERIAL		LBS (Kg)
CERAMIC	EMPTY	22 (10)
CERAMIC	FULL	43 (19.5)

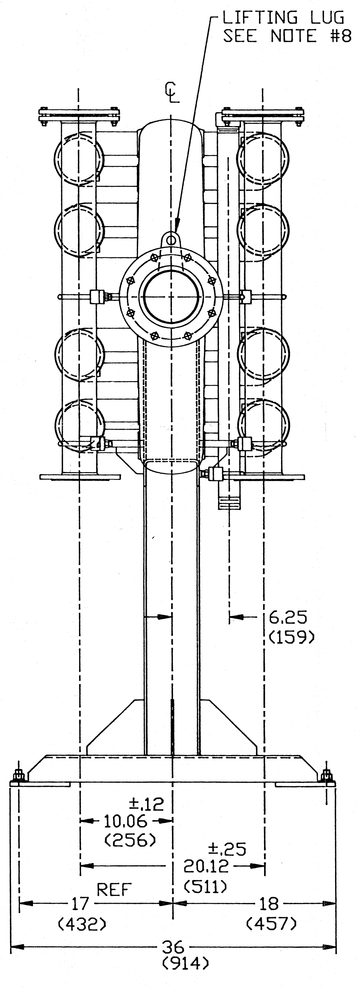

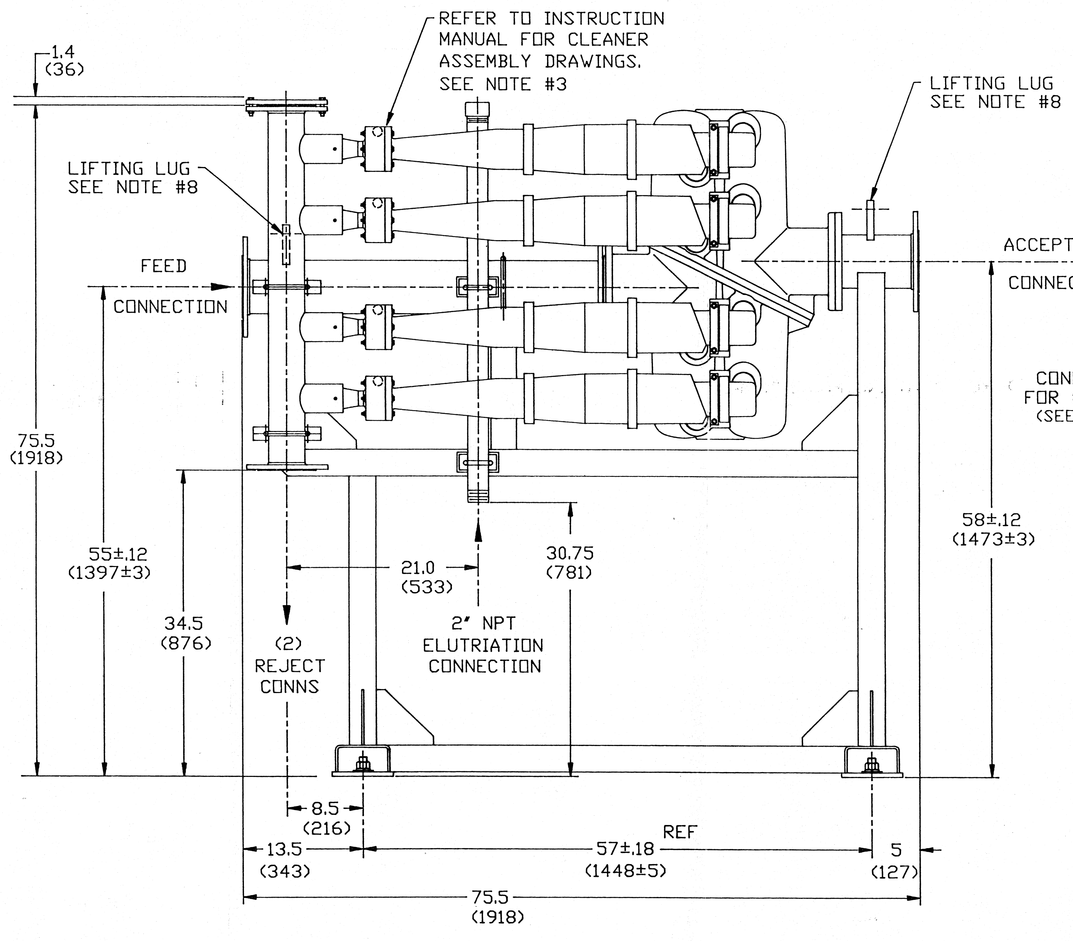

NOTES:

1) REFER TO INSTRUCTION MANUAL FOR INSTRUCTIONS ON INSTALLING, OPERATING, AND MAINTAINING CLEANER SYSTEM.

2) SULZER PAPERTEC ASSUMES NO RESPONSIBILITY FOR THE DESIGN OF SUPPORTS, FOUNDATION, STRUCTURAL AND CONCRETE WORK, OR ANY OTHER EQUIPMENT NOT SUPPLIED BY IT.

3) CLEANERS TO BE INSTALLED AFTER UNIT HAS BEEN GROUTED IN PLACE.

4) ANCHOR BOLTS, NUTS, AND WASHERS ARE TO BE SUPPLIED BY CUSTOMER.

5) FOUNDATION DESIGN TO INCLUDE 25% DYNAMIC LOAD ABOVE OPERATING WEIGHT.

6) FEED, ACCEPT, AND REJECT PRESSURE GAUGES AND TRANSMITTERS SHOULD BE LOCATED AT THE SAME ELEVATION AS THE RESPECTIVE HEADERS ON THE CLEANER BANK. THIS PREVENTS MEASUREMENT INACCURACIES DUE TO ELEVATION DIFFERENCES. THE PRESSURE GAUGE/TRANSMITTER SHOULD BE WITHIN APPROXIMATELY 8 INCHES OF THE CLEANER BANK, AS FAR FROM DISCONTINUITIES AS POSSIBLE, AND ON THE SIDES OF HORIZONTAL PIPE RUNS WHERE POSSIBLE.

7) MAXIMUM OPERATING PRESSURE - 60 P.S.I. (4.1 BAR)
MILL MUST PROVIDE SOME TYPE OF PRESSURE RELIEF SYSTEM TO PREVENT UNIT FROM BEING OVER PRESSURIZED.

8) REFER TO INSTRUCTION MANUAL BEFORE LIFTING.

9) WARNING
NEVER TIGHTEN FOUNDATION NUTS IN SUCH A WAY AS TO CAUSE STRESSES ON THE HEADER ASSEMBLY WHICH WILL CAUSE MIS-ALIGNMENT OF THE CLEANERS.

10) ALL FLANGE CONNECTIONS ARE 150# ANSI 16.5 DRILLED VAN STONE TYPE.

11) MAXIMUM ELUTRIATION PRESSURE = 60 PSI
MINIMUM ELUTRIATION PRESSURE = 20 PSI GREATER THAN ACCEPT PRESSURE.
MAXIMUM ELUTRIATION TEMPERATURE = 130°F

FOR: Auburn VPS Partnership
ADDRESS: Auburn, ME
S.O. 75582-12 C.O. 04358-M-018 SERIAL NO. HC-184

☐ FOR APPROVAL
DRAWING APPROVED AS SENT AND FABRICATION WILL PROCEED AS SHOWN IF PRINTS ARE NOT RETURNED CORRECTED TO SULZER PAPERTEC MANSFIELD INC. WITHIN 30 DAYS OF RECEIPT.

☑ FINAL CERTIFIED
DESTROY ALL PREVIOUSLY REVISED PRINTS.
SIGNED: J. Becker DATE: 5-3-94

DIMENSIONS INCH (MM)

TAGGING:
Quaternary Forward Cleaners
Equip. No. 3020-76037

This Design is the Property of Sulzer Papertec Mansfield, Inc. Therefore express not to use, copy or disclose except as required for the purpose for which it was furnished.

MAY 13 1994

E.C.N. No.	DATE	REVISION	NAME	LOC	S.O. No.
JPM	11/6/92	REVISED REJECT HEADER	FDX	1	

DRWN D.Fox	ASSY INSTALLATION (4-8 BANK) WITH ELUTRICONE
DATE 7-22-92	MACHINE L-5 CLEANER
CHKD JPM	ZHC5-904-00030
DATE 7-23-92	
SCALE NONE	SULZER Papertec MANSFIELD, MA U.S.A.

-CAD DWG-