Standard cylinders to ISO 15552

DSBC

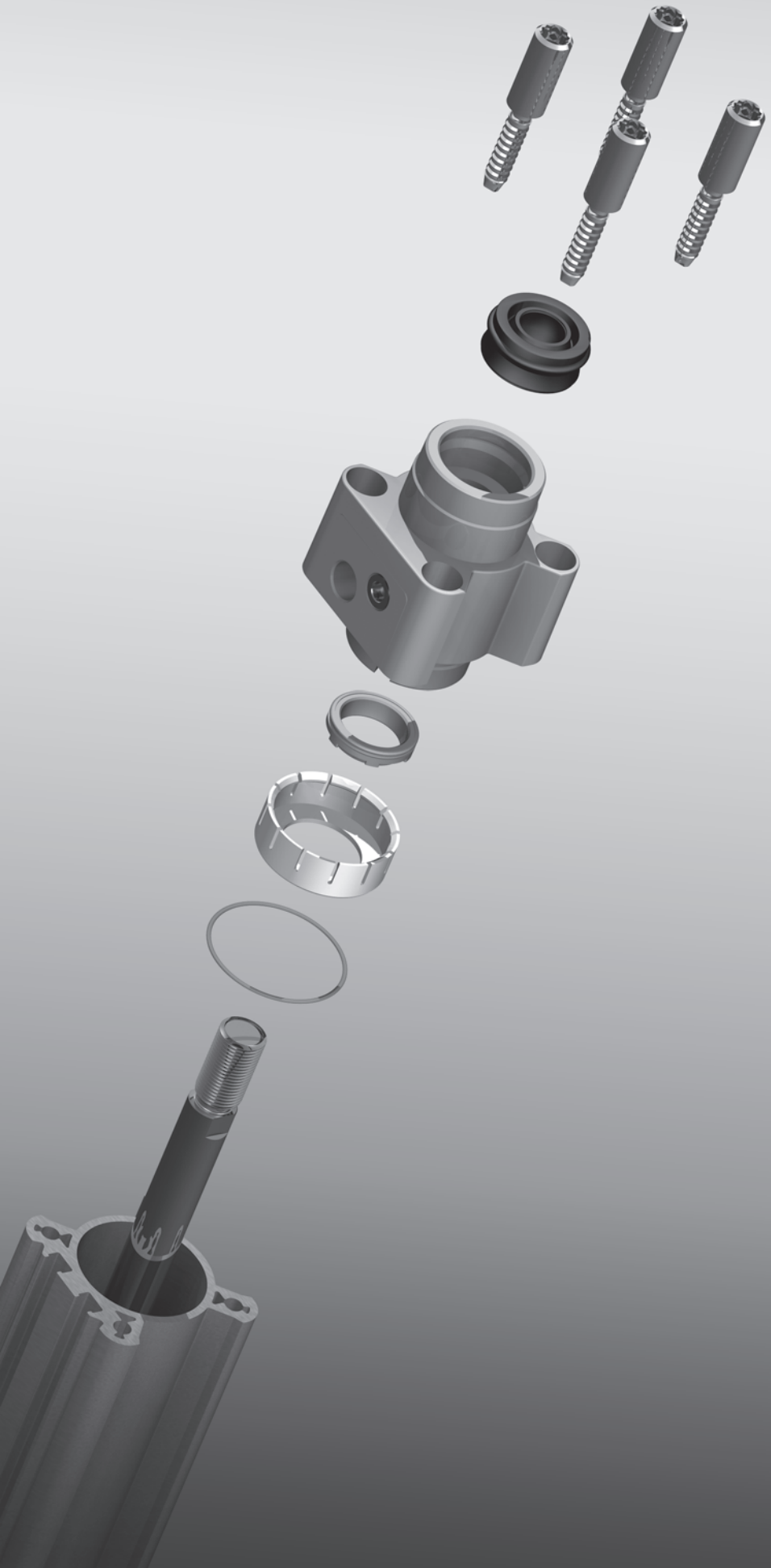

FESTO

Repair instructions (en)

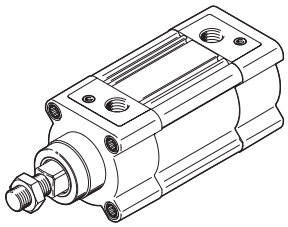

7DSBCa_en

About this magazine

Version:
7DSBCa_en (26.07.2018)

Copyright:
©Festo AG & Co. KG
Postfach
73726 Esslingen
Germany

Editorial team:
Spare Part Documentation and
Support

Phone:
+49 / 711 / 347-0

Fax:
+49 / 711 / 347-2144

E-mail:
service_international@festo.com

Internet:
www.festo.com

The reproduction, distribution or sale of this document or communication of its contents to others without express authorisation is prohibited. Offenders will be held liable for damages. All rights reserved in the event that a patent, utility model or design patent is registered.

All product designations and brand names used are the property of the owners and not explicitly identified as such.

All technical data are subject to change according to technical updates.

Foreword

These repair instructions are valid for the ISO cylinder listed on the title page to the exclusion of any liability claims.

The descriptions in these repair instructions may differ depending on the version and/or modification status of the ISO cylinder. The user must check this prior to carrying out the repair and take the deviations into consideration if necessary.

These repair instructions have been prepared with care.

Festo AG & Co. KG does not, however, accept liability for any errors in these repair instructions or their consequences. Likewise, no liability is accepted for direct or consequential damage resulting from incorrect use of the products.

Further information is given in Chapter 8 on page 55.

The relevant regulations on occupational safety, safety engineering, and interference suppression as well as the stipulations contained in these repair instructions must be observed when working on the products.

FESTO

Table of contents

1	**Important information**		**6**
	1.1	About these repair instructions	6
	1.2	Symbols used in these repair instructions	6
	1.3	Text designations used in these repair instructions	6
	1.4	General safety information	7
	1.5	Technical requirements	8
	1.6	Standards and test values	8
2	**General product description**		**8**
	2.1	Functional description	8
		2.1.1 DSBC-...	9
		2.1.2 DSBC-...-C (with clamping unit)	9
		2.1.3 DSBC-...-E1 / E2 / E3 (with end-position locking)	10
	2.2	Type code	10
	2.3	Repair-relevant features	11
	2.4	Orientation designations	13
	2.5	Sizes and part numbers	13
		2.5.1 Standard cylinder DSBC, ISO 15552	13
		2.5.2 ISO cylinder DSBC, standard hole pattern, with clamping unit	13
		2.5.3 ISO cylinder DSBC, standard hole pattern, with end-position locking	13
3	**Components list**		**14**
	3.1	DSBC-... / A3	14
		3.1.1 DSBC-...-C (with clamping unit)	16
		3.1.2 DSBC-...-E1 / E2 / E3 (with end-position locking)	18
	3.2	DSBC-...-T1 / T4 / A1 and DSBC-...-L / U / L1	20
	3.3	DSBC-...-T3 / A2	22
	3.4	DSBC-...-A6	24
4	**Repair steps**		**26**
	4.1	Preparatory steps	26
	4.2	Visual inspection	26
	4.3	Repairing the ISO cylinder DSBC-... / A3	27
		4.3.1 Requirements	27
		4.3.2 Validity	27
		4.3.3 Structure of the bearing cap	27
		4.3.4 Removing the bearing and end cap	28
		4.3.5 Replacing the piston components	28
		4.3.6 Inserting the piston rod into the cylinder barrel	29
		4.3.7 Repairing and attaching the bearing and end caps	29
	4.4	Additional repair steps for DSBC-...-C (with clamping unit)	32
		4.4.1 Structure of the clamping unit	32
		4.4.2 Dismantling the clamping unit	32
		4.4.3 Repairing the clamping unit	33
		4.4.4 Mounting the clamping unit	33

Table of contents

4.5	Additional repair steps for DSBC-...-E1 / E2 / E3 (with end-position locking)		35
	4.5.1	Structure of the bearing cap with end-position locking	35
	4.5.2	Unlocking the end-position locking manually	35
	4.5.3	Dismantling the stop cylinder	36
	4.5.4	Mounting the bearing or end cap with end-position locking	36
	4.5.5	Mounting the lock cylinder	36
	4.5.6	Releasing the end-position locking	36
4.6	Repairing the ISO cylinder DSBC-...-T1 / T4 / A1 and DSBC-...-L / U / L1		37
4.7	Requirements		37
	4.7.1	Validity	37
	4.7.2	Structure of the bearing cap	37
	4.7.3	Removing the bearing and end caps	38
	4.7.4	Replacing the piston components	38
	4.7.5	Inserting the piston rod into the cylinder barrel	39
	4.7.6	Repairing and attaching the bearing and end caps	39
4.8	Repairing the ISO cylinder DSBC-...-T3 / A2		42
	4.8.1	Requirements	42
	4.8.2	Validity	42
	4.8.3	Structure of the bearing cap	42
	4.8.4	Removing the bearing and end caps	43
	4.8.5	Replacing the piston components	43
	4.8.6	Inserting the piston rod into the cylinder barrel	44
	4.8.7	Repairing and attaching the bearing and end caps	44
4.9	Repairing the ISO cylinder DSBC-...-A6		48
	4.9.1	Requirements	48
	4.9.2	Validity	48
	4.9.3	Structure of the bearing cap	48
	4.9.4	Removing the bearing and end caps	49
	4.9.5	Replacing the piston components	49
	4.9.6	Inserting the piston rod into the cylinder barrel	50
	4.9.7	Repairing and attaching the bearing and end caps	51
5	**Cleaning and greasing**		**53**
5.1	Cleaning		53
5.2	Greasing		53
	5.2.1	Thin grease film	54
	5.2.2	Grease reservoir	54
6	**Maintenance and care**		**54**
7	**Tools**		**54**
7.1	Standard tools		54
7.2	Special tools		54
8	**Liability**		**55**

1 Important information

1.1 About these repair instructions

This document contains important information about professional repair of the ISO cylinder of the type DSBC.

The ISO cylinder DSBC is fully repairable in the event of damage due to normal wear.
The entire ISO cylinder must be replaced in the event of damage to the cylinder barrel.

However, the costs of carrying out a repair must be considered in the case of larger defects.

Before carrying out a repair, the relevant chapter in these instructions must be read in full and followed consistently.

For reasons of clarity, these repair instructions do not contain all detailed information. The following documents should therefore also be available while performing repair work on the ISO cylinder:

- **Operating instructions**

  Contains information about the operating elements and connections of the ISO cylinder, as well as information about its function, structure, application, installation, commissioning, maintenance and care, etc. This information is available on the Festo website (➔ www.festo.com/sp).
- **Spare parts documentation**

  Contains an overview of the spare and wearing parts as well as information on their installation. This can be found in the online spare parts catalogue on the Festo website (➔ www.festo.com/spareparts).
- **“Tools and repair accessories” information brochure**

  Contains an overview of the available installation resources, e.g. lubricating greases, threadlocking agents, maintenance tools, etc. (resources for installation and maintenance). The brochure can be found in the online spare parts catalogue on the Festo website (➔ Tools and repair accessories.pdf).

1.2 Symbols used in these repair instructions

Danger categories

The following symbols identify text passages which draw attention to specific hazards.

Warning

Caution

Marking special information

The following pictograms mark passages in the text which contain special information.

Note

Information

Environment

1.3 Text designations used in these repair instructions

- Activities that can be carried out in any order.

1. Activities which should be carried out in the specified order.

➔ Reference to further information

– General list

Underlined, blue text indicates a cross-reference or hyperlink that you can click on in the PDF.

1.4 General safety information

Caution

Risk of injury due to unintended switching on and unexpected movements.

- Ensure that the ISO cylinder is depressurised and protected against restarting before any repair or maintenance work is carried out.

Caution

The ISO cylinder may only be repaired by authorised and trained persons in accordance with the specifications in the technical documentation and using genuine spare parts.

Installation and repair by unauthorised and untrained persons, repairs using non-original spare parts or without the technical documentation required for installation and/or repair are dangerous and therefore not permitted.

Repairs must only be carried out in conjunction with these repair instructions and the respective device-specific operating instructions.

Caution

Lifting large loads can lead to permanent injury.

- The ISO cylinder must be lifted by several people or with suitable lifting gear, depending on its size and weight.

Note

- Observe the given tightening torques. If no special information is given the tightening torques given in the relevant standard apply to the screws, bolts and nuts used.
- Note the strength class of the screws, bolts and nuts!

Note

Carrying out repair work without the respective necessary technical documentation is dangerous, and therefore not permissible. Repairs must only be carried out in conjunction with these repair instructions and the respective operating instructions for the device, as well as the documents listed in Chapter 1.1 on page 6.

Festo recommends use of LOCTITE 243 threadlocker.

In the event of damage caused by unauthorised manipulation, improper use or use of non-original spare parts, all warranty and liability claims against the manufacturer expire.

Instead of carrying out the repair yourself, your local Festo sales office offers the option of having the repair carried out by Festo.

Components and equipment replaced during repair must be disposed of in accordance with the relevant local environmental protection regulations.

1.5 Technical requirements

Note

The following instructions for safe and proper use must be observed:

- Observe the connection and ambient conditions specified in the technical data of the products and all the connected components. The product can only be operated in compliance with the relevant safety guidelines if you comply with the limit values and load limits (➔ see enclosed documentation).
- The ISO cylinder must be in faultless technical condition.
- The ISO cylinder may only be operated in its original condition and without unauthorised modifications.
- The ISO cylinder is designed for industrial use.

1.6 Standards and test values

Standards and test values which products comply with and fulfil can be found in the "Technical data" sections of the enclosed documentation.

2 General product description

2.1 Functional description

The piston moves in the cylinder barrel when the cylinder chamber is pressurised. The piston rod transfers the movement to the outside. The advanced piston rod is retracted again when the other cylinder chamber is pressurised.

2.1.1 DSBC-...

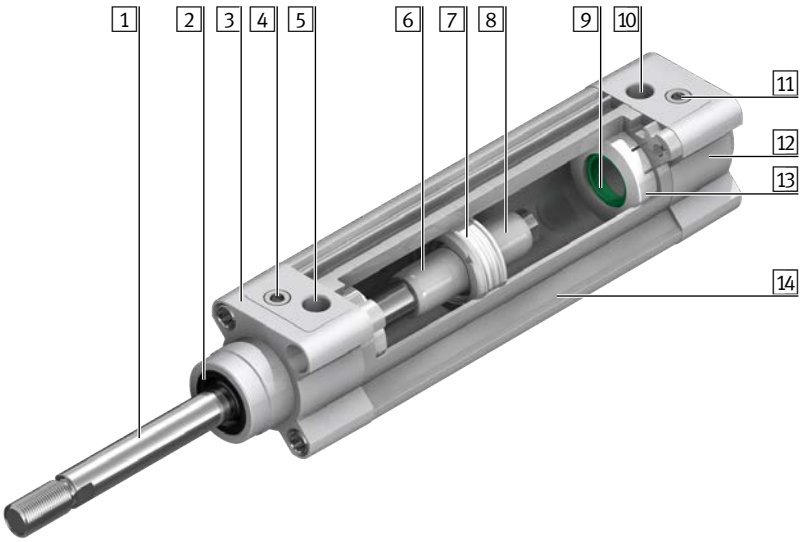

Illustrated: DSBC-32-...-PPV-...

1 Piston rod
2 Scraper ring
3 Bearing cap
4 Adjustment of front end-position cushioning (only with PPV)
5 Front compressed air port
6 Cushion piston (only with PPV)
7 Piston
8 Cushion piston (only with PPV)
9 Buffer seal (only in PPV / PPS)
10 Rear compressed air port
11 Adjustment of rear end-position cushioning (only with PPV)
12 End cap (in DSBC-...-T: Rear bearing cap)
13 Holding disc (only in DSBC-32 ... 63)
14 Cylinder barrel

2.1.2 DSBC-...-C (with clamping unit)

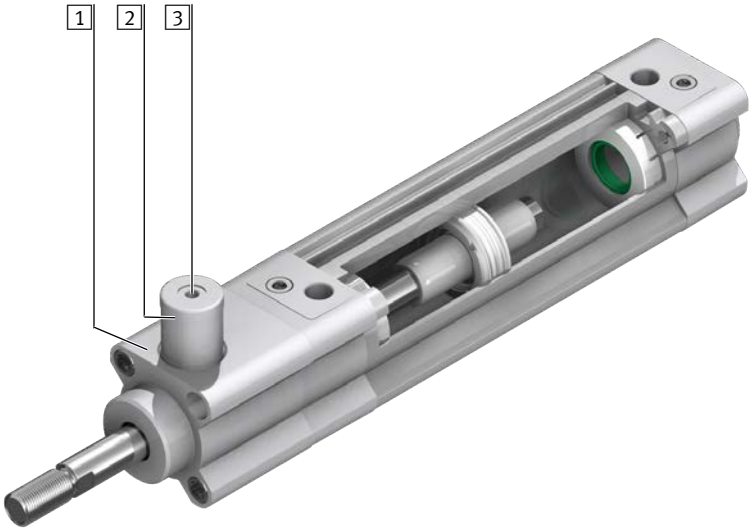

Illustrated: DSBC-32-...-C

Additional components

1 Holder of the clamping unit
2 Clamping cartridge
3 Connection for compressed air or mounting screw

2.1.3 DSBC-...-E1 / E2 / E3 (with end-position locking)

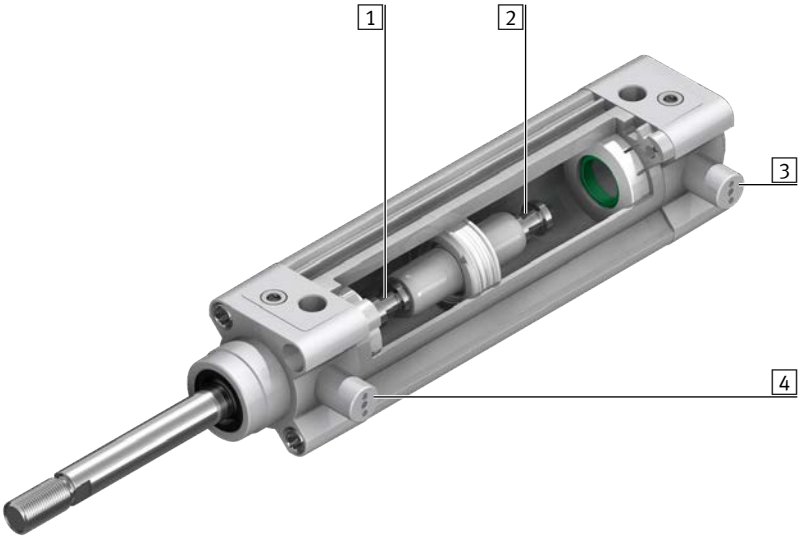

Additional components

1. Slot in the piston rod for the end-position locking: Piston rod advanced
2. Slot in the piston rod for end-position locking: Piston rod retracted
3. Rear end-position locking (piston rod retracted)
4. Front end-position locking (piston rod advanced)

Illustrated: DSBC-32-...-E1 (end-position locking at both ends)

2.2 Type code

The precise features of an ISO cylinder can be determined with the help of the product labelling on the cylinder. The order code is positioned directly beneath the Festo logo and describes the ISO cylinder's features separated by a hyphen “-”.

Example:

1. Order code
2. Serial number
3. Technical information
4. Part number

The order code on the product labelling provides the following information:

DSBC	ISO cylinder of the type DSBC
32	Size: Piston diameter 32 mm
100	Stroke 100 mm
PPV	Adjustable end-position cushioning
A	Position sensing option (for proximity switch)
N3	Conforms to ISO 15552
T1	Heat-resistant seals 0 up to +120 °C (➔ Chapter 2.3 on page 11)

A list and description of all possible equipment features of the ISO cylinder can be found on the data sheet. The data sheet is available on the Festo website (➔ www.festo.com).

2.3 Repair-relevant features

The ISO cylinder is equipped with repair-relevant and other, optional features.

Repair-relevant features require a different repair procedure. The repair-relevant features are listed in the table with a reference to the corresponding repair description.

Bearing cap variants and repair-relevant features		Other optional features	Page
	DSBC-... Standard version, without repair-relevant feature Additional repair steps for : DSBC-...-**C** (with clamping unit) DSBC-...-**E1 / E2 / E3** (with end-position locking)	Q, C, E1, E2, E3, P, PPV, PPS, T, F, D3, A, N3, R3, P2, EX4, L1, ...E, ...L	27 32 35
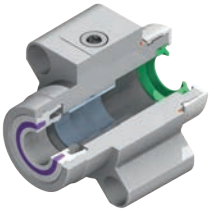	DSBC-...-**A3** Suitable for unlubricated operation	P, PPV, PPS, T, F, D3, A, R3, ...E, ...L	27
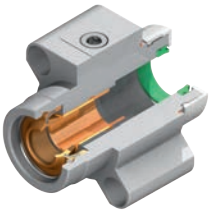	DSBC-...-**T1** (without A6) Heat-resistant seals 0 to +120 °C DSBC-...-**T4** (without A6) Heat-resistant seals 0 to +150 °C	Q (only with T1), P, PPV, T, F, D3, A, N3, R3, P2, ...E, ...L	37
	DSBC-**L** Low friction DSBC-**U** Constant, slow movement	P, PPV, PPS, F, D3, A, ...E, ...L	
	DSBC-**L1** Low friction for balancer applications	P, PPS, F, D3, A, ...E, ...L	
	DSBC-...-**A1** Increased chemical resistance	PPV, T, F, D3, A, N3, R3, P2, ...E, ...L	

Bearing cap variants and repair-relevant features		Other optional features	Page
	DSBC-...-**T3** (without A6) Resistant to low temperature –40 to +80 °C	P, PPV, T, F, D3, A, N3, R3, P2, ...E, ...L	42
	DSBC-...-**A2** Hard scraper	P, PPV, PPS, T, F, D3, A, N3, EX4, ...E, ...L	
	DSBC-...-**A6 / T1-A6 / T3-A6 / T4-A6** Metal scraper	P, PPV, PPS, T, F, D3, A, N3, T1, T3, T4, ...E, ...L	48

Explanation of the other, optional features

Q	Piston rod, square (protection against rotation)
L	Running characteristic: low friction
U	Running characteristic: constant, slow movement
L1	Low friction for balancer applications
C	Clamping unit attached
E1	End-position locking, at both ends
E2	End-position locking, with advanced piston rod
E3	End-position locking, with retracted piston rod
T	Through piston rod
F	Piston rod with female thread
D3	Cylinder profile with sensor slots on 3 sides
P	Elastic cushioning rings/pads at both ends
PPV	Pneumatic cushioning, adjustable at both ends
PPS	Pneumatic cushioning, self-adjusting at both ends
A	Position sensing option (for proximity switch)
N3	Corresponds to ISO 15552
R3	High corrosion protection
P2	Bellows on the bearing cap
EX4	Approval II 2GD to EU Ex-Protection Directive (ATEX)
...E	Extended piston rod
...L	Extended piston rod thread

2.4 Orientation designations

This illustration provides an overview of the orientation designations of the ISO cylinder.

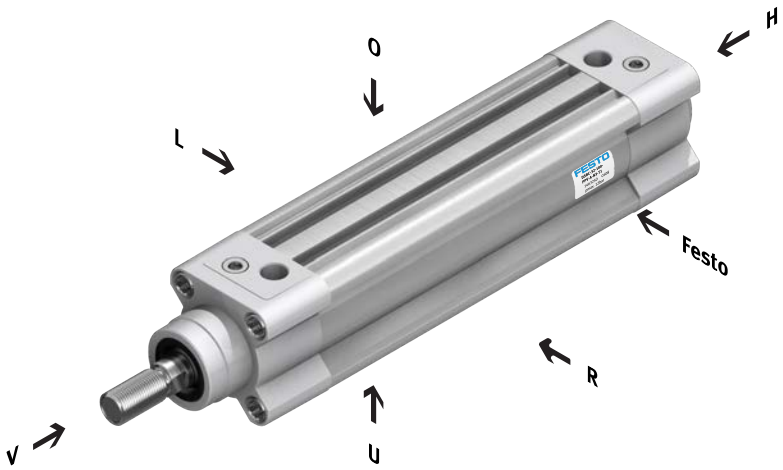

Festo=Reference point for product labelling

O = top
U = bottom
R = right
L = left
V = front
H = rear

2.5 Sizes and part numbers

You will find the complete overview of features, accessories, type codes, technical data and dimensions in the product catalogue or on the Festo website (➔ www.festo.com).

2.5.1 Standard cylinder DSBC, ISO 15552

Size	Module number
DSBC-...-32- -	1463250
DSBC-...-40- -	1461995
DSBC-...-50- -	1463770
DSBC-...-63- -	1463475
DSBC-...-80- -	1463495
DSBC-...-100- -	1463520
DSBC-...-125- -	1722457

2.5.2 ISO cylinder DSBC, standard hole pattern, with clamping unit

Size	Module number
DSBC-...-32-C- -	1463250
DSBC-...-40-C- -	1461995
DSBC-...-50-C- -	1463770
DSBC-...-63-C- -	1463475
DSBC-...-80-C- -	1463495
DSBC-...-100-C- -	1463520
DSBC-...-125-C- -	1722457

2.5.3 ISO cylinder DSBC, standard hole pattern, with end-position locking

Size	Module number
DSBC-...-32-E1 / E2 / E3- -	1463250
DSBC-...-40-E1 / E2 / E3- -	1461995
DSBC-...-50-E1 / E2 / E3- -	1463770
DSBC-...-63-E1 / E2 / E3- -	1463475
DSBC-...-80-E1 / E2 / E3- -	1463495
DSBC-...-100-E1 / E2 / E3- -	1463520

3 Components list

3.1 DSBC-... / A3

Separate component lists for ISO cylinder with clamping unit or end-position locking:

- DSBC-...-C (with clamping unit): Chapter 3.1.1 on page 16.
- DSBC-...-E1 / E2 / E3 (with end-position locking): Chapter 3.1.2 on page 18.

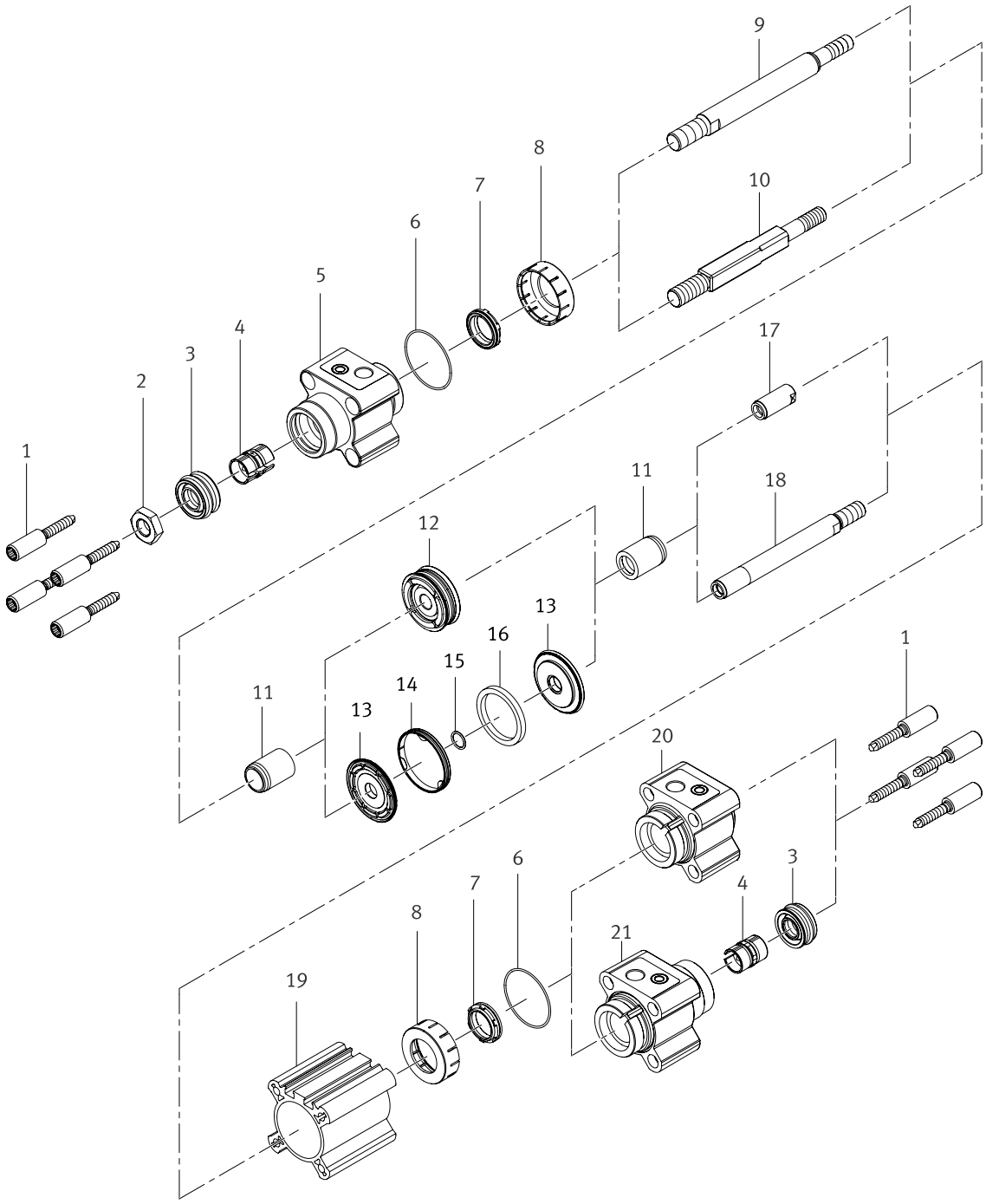

This diagram is intended to provide an overview of the individual components and an aid when ordering. For a more detailed assembly overview, refer to the online spare parts catalogue on the Festo website (➔ www.festo.com/spareparts).

DSBC-... / A3		
Item	Designation	Note
1	Flange screw	
2	Hex nut	
3	Scraper ring	
4	Bearing (plastic) Bearing (metal)	 for DSBC-...-Q / E1 / E2 / E3 / EX4
5	Bearing cap	
6	O-ring	
7	Cushioning seal	only DSBC-...-PPV / PPS-...
8	Holding disc	only DSBC-32 / 40 / 50 / 63-...
9	Piston rod, round	DSBC-... (not for DSBC-...-Q-...)
10	Piston rod, protected against rotation	only DSBC-...-Q-...
11	Cushioning boss / buffer sleeve	only DSBC-...-PPV / PPS-...
12	Piston	only DSBC-32 / 40 (from E7)-...
13	Piston washer	only DSBC-40 (up to E6) / 50 / 63 / 80 / 100 / 125-...
14	Guide band	only DSBC-40 (up to E6) / 50 / 63 / 80 / 100 / 125-...
15	O-ring	only DSBC-40 (up to E6) / 50 / 63 / 80 / 100 / 125-...
16	Ring magnet	only DSBC-40 (up to E6) / 50 / 63 / 80 / 100 / 125-...
17	Threaded coupling	only DSBC-...
18	Rear piston rod	only DSBC-...-T-...
19	Cylinder barrel	
20	End cap	only DSBC-...
21	Rear bearing cap	only DSBC-...-T-...

3.1.1 DSBC-...-C (with clamping unit)

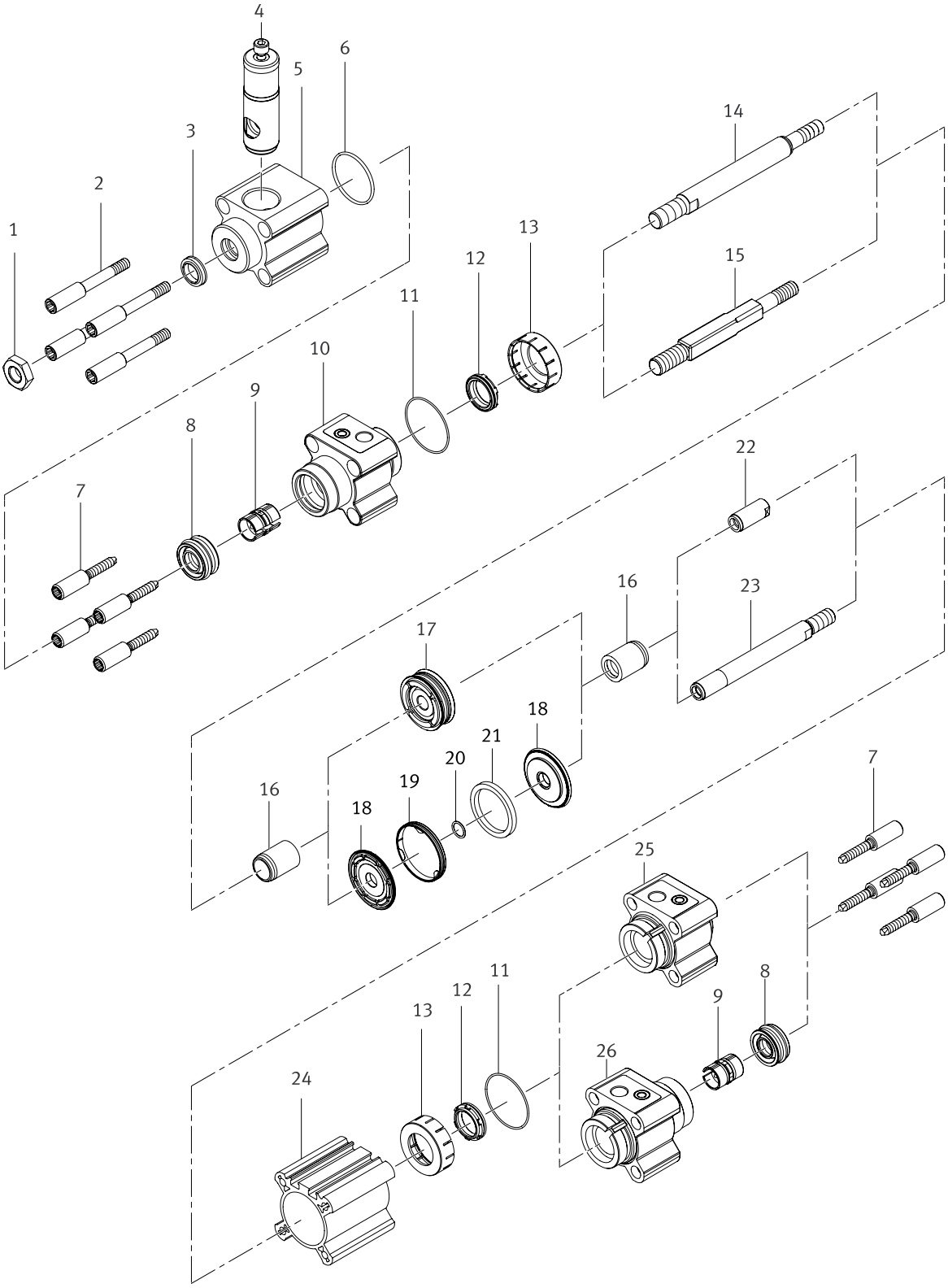

This diagram is intended to provide an overview of the individual components and an aid when ordering. For a more detailed assembly overview, refer to the online spare parts catalogue on the Festo website (➔ www.festo.com/spareparts).

DSBC-...-C (with clamping unit)		
Item	Designation	Note
1	Hex nut	
2	Flange screw	
3	Wiper seal	
4	Clamping cartridge	with mounting screw
5	Holder of the clamping unit	
6	O-ring	
7	Flange screws	
8	Scraper ring	
9	Bearing (plastic)	
10	Bearing cap	
11	O-ring	
12	Cushioning seal	only DSBC-...-PPV / PPS-...
13	Holding disc	only DSBC-32 / 40 / 50 / 63-...
14	Piston rod, round	DSBC-... (not for DSBC-...-Q-...)
15	Piston rod, protected against rotation	only DSBC-...-Q-...
16	Cushioning boss / buffer sleeve	only DSBC-...-PPV / PPS-...
17	Piston	only DSBC-32 / 40 (from E7)-...
18	Piston washer	only DSBC-40 (up to E6) / 50 / 63 / 80 / 100 / 125-...
19	Guide band	only DSBC-40 (up to E6) / 50 / 63 / 80 / 100 / 125-...
20	O-ring	only DSBC-40 (up to E6) / 50 / 63 / 80 / 100 / 125-...
21	Ring magnet	only DSBC-40 (up to E6) / 50 / 63 / 80 / 100 / 125-...
22	Threaded coupling	only DSBC-...
23	Rear piston rod	only DSBC-...-T-...
24	Cylinder barrel	
25	End cap	only DSBC-...
26	Rear bearing cap	only DSBC-...-T-...

The ISO cylinder with clamping unit and non-rotating piston rod (feature Q) is only available with through (double-ended) piston rod (feature T).
The clamping unit (Items 2 to 6), unlike this illustration, is then located on the rear bearing cap (Item 26).

3.1.2 DSBC-...-E1 / E2 / E3 (with end-position locking)

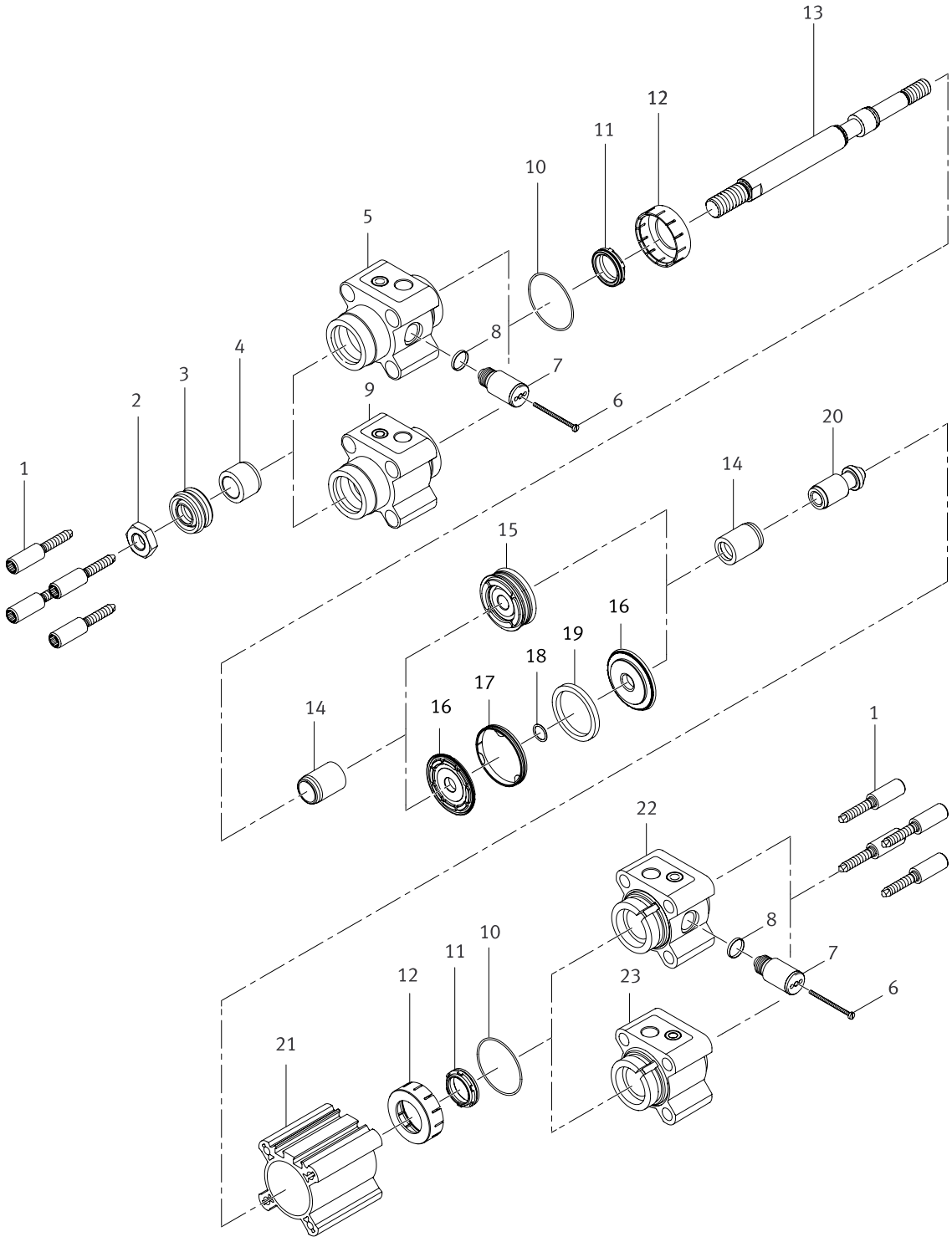

This diagram is intended to provide an overview of the individual components and an aid when ordering. For a more detailed assembly overview, refer to the online spare parts catalogue on the Festo website (➔ www.festo.com/spareparts).

DSBC-...-E1 / E2 / E3 (with end-position locking)		
Item	Designation	Note
1	Flange screw	
2	Hex nut	
3	Scraper ring	
4	Bearing (metal)	
5	Bearing cap (with end-position locking)	only DSBC-...-E1 / E2-...
6	Screw	
7	Stop cylinder	
8	Spacer ring	only DSBC-100-...-E1 / E2 / E3-...
9	Bearing cap	only DSBC-...-E3-...
10	O-ring	
11	Cushioning seal	only DSBC-...-PPV / PPS-...
12	Holding disc	only DSBC-32 / 40 / 50 / 63-...
13	Piston rod	
14	Cushioning boss	only DSBC-...-PPV-...
15	Piston	only DSBC-32 / 40 (from E7)-...
16	Piston washer	only DSBC-40 (up to E6) / 50 / 63 / 80 / 100-...
17	Guide band	only DSBC-40 (up to E6) / 50 / 63 / 80 / 100-...
18	O-ring	only DSBC-40 (up to E6) / 50 / 63 / 80 / 100-...
19	Ring magnet	only DSBC-40 (up to E6) / 50 / 63 / 80 / 100-...
20	Threaded coupling	
21	Cylinder barrel	
22	End cap (with end-position locking)	only DSBC-...-E1 / E3-...
23	End cap	only DSBC-...-E2-...

3.2 DSBC-...-T1 / T4 / A1 and DSBC-...-L / U / L1

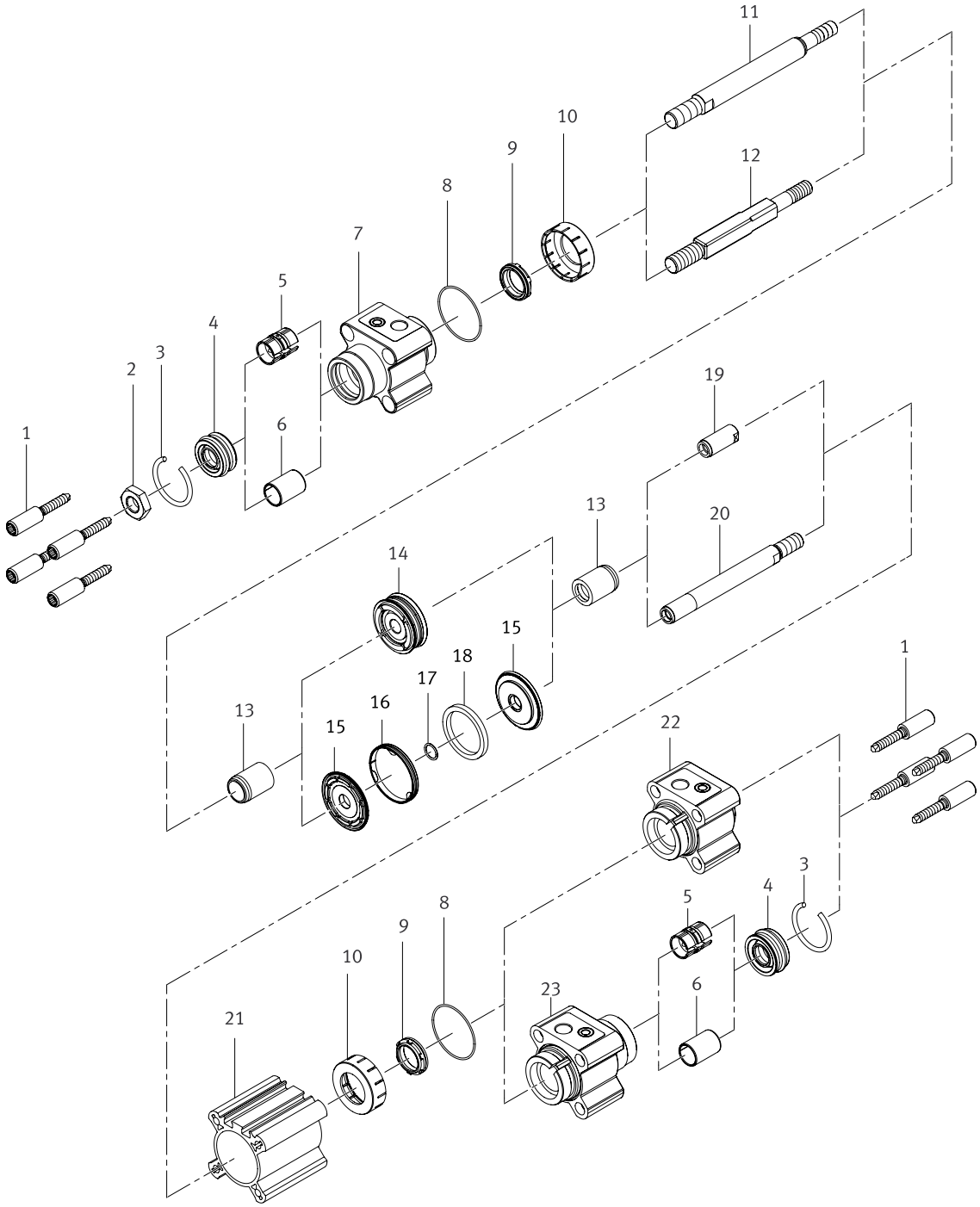

This diagram is intended to provide an overview of the individual components and an aid when ordering. For a more detailed assembly overview, refer to the online spare parts catalogue on the Festo website (➔ www.festo.com/spareparts).

DSBC-...-T1 / T4 / A1 and DSBC-...-L / U / L1		
Item	Designation	Note
1	Flange screw	
2	Hex nut	
3	Circlip	
4	Scraper ring	
5	Bearing (plastic)	only DSBC-...-A1
6	Bearing (metal)	
7	Bearing cap	
8	O-ring	
9	Cushioning seal	only DSBC-...-PPV / PPS-...
10	Holding disc	only DSBC-32 / 40 / 50 / 63-...
11	Piston rod, round	DSBC-... (not for DSBC-...-Q-...)
12	Piston rod, protected against rotation	only DSBC-...-Q-...
13	Cushioning boss / buffer sleeve	only DSBC-...-PPV / PPS-...
14	Piston	only DSBC-32 / 40 (from E7)-...
15	Piston washer	only DSBC-40 (up to E6) / 50 / 63 / 80 / 100 / 125-...
16	Guide band	only DSBC-40 (up to E6) / 50 / 63 / 80 / 100 / 125-...
17	O-ring	only DSBC-40 (up to E6) / 50 / 63 / 80 / 100 / 125-...
18	Ring magnet	only DSBC-40 (up to E6) / 50 / 63 / 80 / 100 / 125-...
19	Threaded coupling	only DSBC-...
20	Rear piston rod	only DSBC-...-T-...
21	Cylinder barrel	
22	End cap	only DSBC-...
23	Rear bearing cap	only DSBC-...-T-...

3.3 DSBC-...-T3 / A2

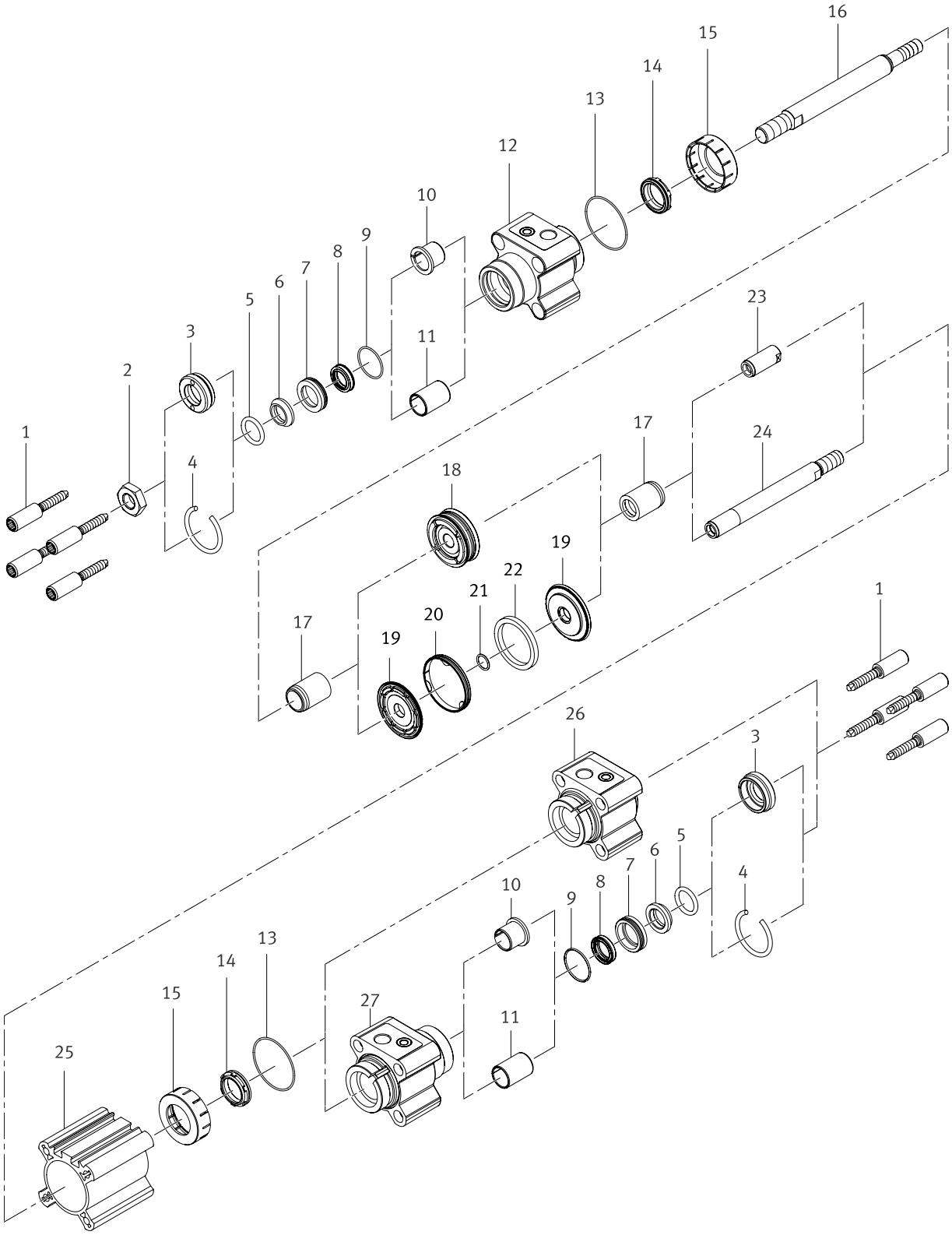

This diagram is intended to provide an overview of the individual components and an aid when ordering. For a more detailed assembly overview, refer to the online spare parts catalogue on the Festo website (➔ www.festo.com/spareparts).

DSBC-...-T3 / A2		
Item	Designation	Note
1	Flange screw	
2	Hex nut	
3	Screwed insert	only DSBC-32 / 40 / 50 / 63 / 80 / 100-...
4	Circlip	only DSBC-125-...
5	O-ring	
6	Excluder	
7	Insert sleeve	
8	Scraper ring	
9	O-ring	
10	Flanged bearing (plastic)	only DSBC-32 ... 100-...-T3
11	Bearing (plastic) Bearing (metal)	only DSBC-125-...-T3 only DSBC-...-A2
12	Bearing cap	
13	O-ring	
14	Cushioning seal	only DSBC-...-PPV / PPS-...
15	Holding disc	only DSBC-32 / 40 / 50 / 63-...
16	Piston rod	
17	Cushioning boss / buffer sleeve	only DSBC-...-PPV / PPS-...
18	Piston	only DSBC-32 / 40 (from E7)-...
19	Piston washer	only DSBC-40 (up to E6) / 50 /63 / 80 / 100 / 125-...
20	Guide band	only DSBC-40 (up to E6) / 50 /63 / 80 / 100 / 125-...
21	O-ring	only DSBC-40 (up to E6) / 50 /63 / 80 / 100 / 125-...
22	Ring magnet	only DSBC-40 (up to E6) / 50 /63 / 80 / 100 / 125-...
23	Threaded coupling	only DSBC-...
24	Rear piston rod	only DSBC-...-T-...
25	Cylinder barrel	
26	End cap	only DSBC-...
27	Rear bearing cap	only DSBC-...-T-...

3.4 DSBC-...-A6

This components list also applies to ISO cylinder with the feature combinations “T1-A6”, “T3-A6” or “T4-A6”.

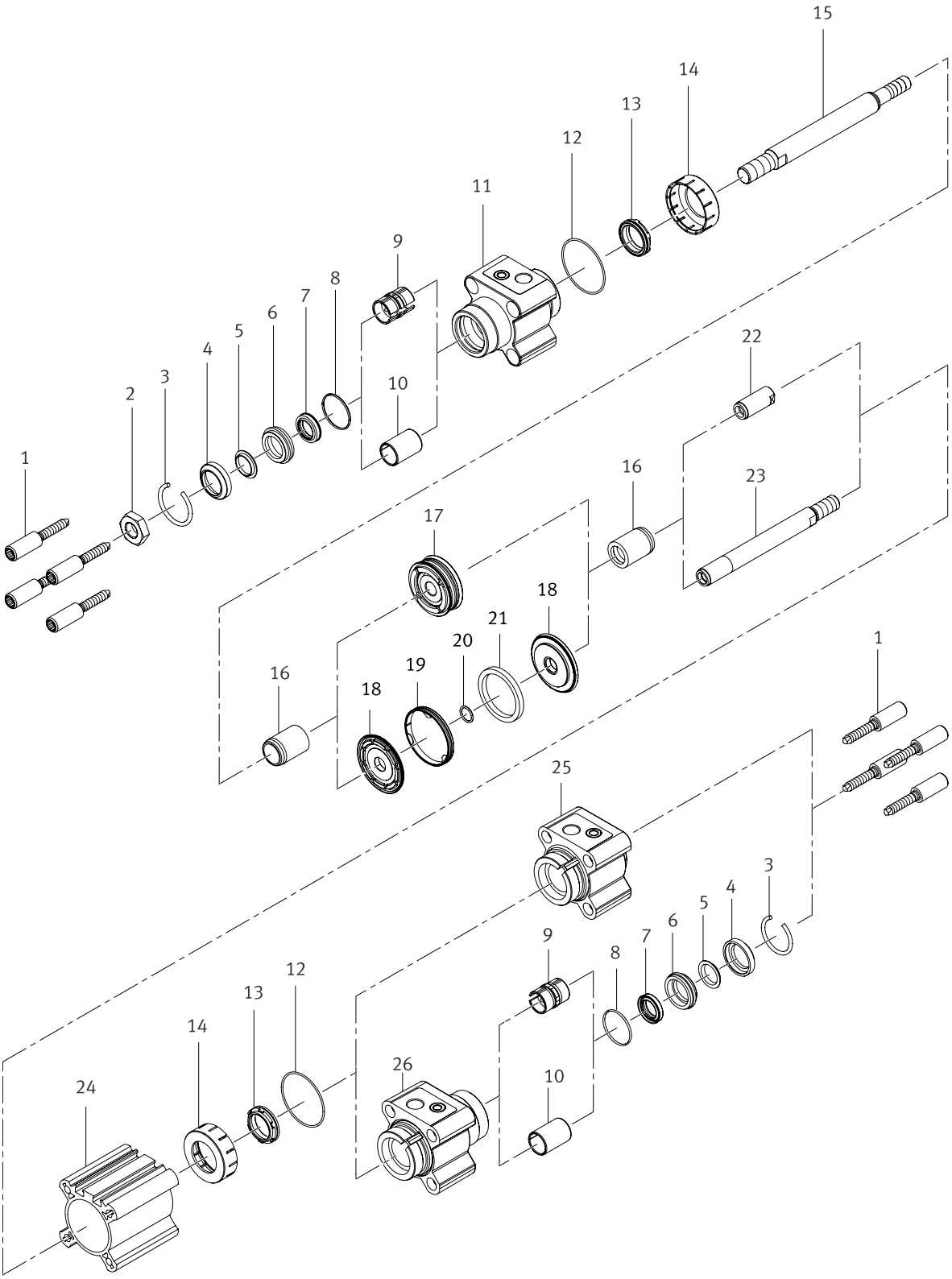

This diagram is intended to provide an overview of the individual components and an aid when ordering. For a more detailed assembly overview, refer to the online spare parts catalogue on the Festo website (➔ www.festo.com/spareparts).

DSBC-...-A6		
Item	Designation	Note
1	Flange screw	
2	Hex nut	
3	Circlip	
4	Distance sleeve	
5	Scraper	
6	Insert sleeve	
7	Scraper ring	
8	O-ring	
9	Bearing (plastic)	only DSBC-...-A6 / T3-A6
10	Bearing (metal)	only DSBC-...-T1-A6 / T4-A6
11	Bearing cap	
12	O-ring	
13	Cushioning seal	only DSBC-...-PPV / PPS-...
14	Holding disc	only DSBC-32 / 40 / 50 / 63-...
15	Piston rod	
16	Cushioning boss / buffer sleeve	only DSBC-...-PPV / PPS-...
17	Piston	only DSBC-32 / 40 (from E7)-...
18	Piston washer	only DSBC-40 (up to E6) / 50 /63 / 80 / 100 / 125-...
19	Guide band	only DSBC-40 (up to E6) / 50 /63 / 80 / 100 / 125-...
20	O-ring	only DSBC-40 (up to E6) / 50 /63 / 80 / 100 / 125-...
21	Ring magnet	only DSBC-40 (up to E6) / 50 /63 / 80 / 100 / 125-...
22	Threaded coupling	only DSBC-...
23	Rear piston rod	only DSBC-...-T-...
24	Cylinder barrel	
25	End cap	only DSBC-...
26	Rear bearing cap	only DSBC-...-T-...

4 Repair steps

Where possible, it is advisable to dismantle the ISO cylinder from the system entirely before carrying out the repair.

Before starting the repair, dismantle any attachments in accordance with the instructions in the accompanying operating instructions.

Keep your working environment clean and tidy.

Before dismantling the ISO cylinder the cause of the failure must be investigated to prevent repeated and premature failure. An ISO cylinder that has been used as intended will not normally exhibit any premature signs of failure.

This investigation is not necessary in the case of non-premature failure (fatigue time). However, the condition of the ISO cylinder (general condition, etc.) must always be checked.

In case of uncertainty, we recommend replacing all the components mentioned to rule out reciprocal effects during later operation.

In the event of premature failure of the ISO cylinder, the operating conditions should be examined more closely.

The following possibilities should be considered, among other things:

- **Overloading**
  - In case of overloading, the application parameters (load, speed) should be adjusted accordingly.
- **Ambient conditions/material resistance**
  - Check whether the ambient temperature is within the permissible range.
  - Check the chemical and physical ambient conditions for harmful substances, such as dust, abrasive particles, cooling lubricants, solvents, ozone, radiation, water-soluble substances, greases and oils, etc.

Note

The repair should preferably be carried out on a stable and flat work surface with storage for small parts.

To prevent damage to sealing rims or guide surfaces, do not use pointed or sharp-edged assembly aids.

Note

Damage to the seals when dismantling the ISO cylinder:

- Use and replace all parts included in the set of wearing parts for the repair.

Only use the spare parts and assembly aids (grease, thread locking agent ...) provided in the set of wearing parts.

4.1 Preparatory steps

Warning

Pressure in the ISO cylinder can dissipate suddenly on opening the cylinder.

Risk of injuries due to the bearing cap unexpected moving away.

- Before starting the repair, completely depressurise the ISO cylinder and attachments: Remove the non-return valves and tubing from the cylinder.

4.2 Visual inspection

Check the ISO cylinder for visible damage that could impair its function:
such as warping of the piston rod as well as deposits and scoring.

The complete ISO cylinder must be replaced if the cylinder barrel is significantly damaged.

4.3 Repairing the ISO cylinder DSBC-... / A3

4.3.1 Requirements

– Preparatory work has been completed (➔ Chapter 4.1 on page 26).
– Visual inspection has been performed (➔ Chapter 4.2 on page 26).

4.3.2 Validity

This chapter applies to the repair of the following versions of the ISO cylinder:

– DSBC-... (**standard version;** without the following features: L / U / L1 / T1 / T3 / T4 / A1 / A2 / A6)
– DSBC-...-**A3**

The different versions and features of the ISO cylinder are explained in Chapter 2.3 on page 11.

ISO cylinder with clamping unit (DSBC-...-C)

- In addition to the repair described here, also follow and carry out the **additional repair steps**:
  ➔ Chapter 4.4 on page 32.

Standard cylinder with end-position locking (DSBC-...-E1 / E2 / E3)

- In addition to the repair described here, also follow and carry out the **additional repair steps**:
  ➔ Chapter 4.5 on page 35.

The following repair steps describe and show the ISO cylinder with single-ended piston rod.

Differences in the **ISO cylinder with through piston rod (DSBC-...-T)**:

- Note the differences shown in the components list (➔ Chapter 3.1 on page 14).
- Take into consideration the following for the repair steps:
  – Instead of threaded coupling: Rear piston rod
  – Instead of end cap: Rear bearing cap
  – Also replace the scraper ring in the rear bearing cap.

4.3.3 Structure of the bearing cap

The bearing and end caps of the various sizes and versions differ and can differ from the illustrations shown in the following. Before each repair, the parts lists of the online spare parts catalogue on the Festo website must be used to determine the precise type of bearing and end cap and must be taken into consideration in the repair (➔ www.festo.com/spareparts).

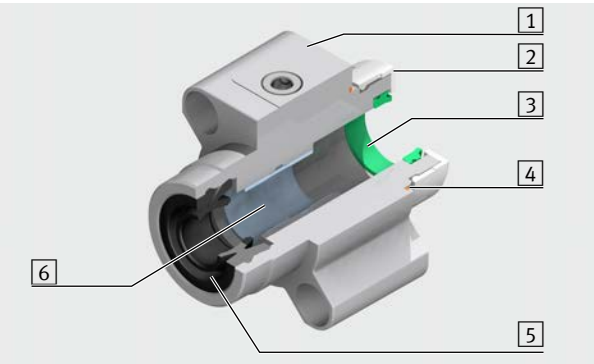

Illustrated: DSBC-32-... (Standard version)

1 Bearing cap
2 Holding disc (only DSBC-32 ... 63)
3 Buffer seal (only DSBC-...-PPV / PPS)
4 O-ring
5 Scraper ring
6 Bearing (plastic).
In version
DSBC-...-Q / E1 / E2 / E3 / EX4: Bearing (metal).

4.3.4 Removing the bearing and end cap

1. Unscrew the flange screws in the bearing and end caps.
2. Pull the bearing and end caps off the cylinder barrel and piston rod.

4.3.5 Replacing the piston components

1. Pull the piston rod out of the cylinder barrel.
2. Inspect the cylinder barrel and piston rod for damage.

Note

The entire ISO cylinder must be replaced if the cylinder barrel, particularly the bearing surface, shows signs of significant damage.

3. Unscrew the threaded coupling from the piston rod.

Note

Note the order and alignment when pushing down the piston components. Recommendation: Place the piston components in such a way that correct assembly is ensured.

Illustrated: Multi-part piston

4. Push the piston components off the piston rod.
5. Clean the thread of the piston rod and threaded coupling to remove screw locking agent.
6. Replace the components contained in the set of wearing parts.
7. Push the piston components onto the piston rod, in the correct order and alignment.
8. Wet the threaded coupling with screw locking agent.
9. Screw the threaded coupling onto the piston rod and tighten with the appropriate torque.

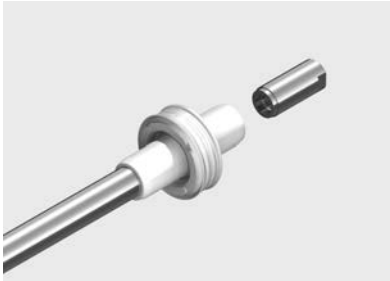

Size	Tightening torque
DSBC-32	10 Nm
DSBC-40	20 Nm
DSBC-50	30 Nm
DSBC-63	40 Nm
DSBC-80	60 Nm
DSBC-100	60 Nm
DSBC-125	170 Nm

4.3.6 Inserting the piston rod into the cylinder barrel

1. Clean the cylinder barrel with a cloth (➔ Chapter 5.1 on page 53).
2. Grease the following components with the grease included in the set of wearing parts:

Component	Greasing
Inside surface of cylinder barrel	apply a thin film[1] of grease
Surface of piston rod	apply a thin film[1] of grease
Piston seal lip rings[3]	apply thin film[1] of grease on the outside
Piston surface between lip rings (grease reservoir[2])	fill uniformly with grease
Cushioning boss / buffer sleeve	apply thin film[1] of grease on the outside

[1] ➔ Chapter 5.2.1 on page 53

[2] ➔ Chapter 5.2.2 on page 53

[3] Do not (completely) fill the installation groove of the lip rings / T-rings and reduction of the seal to the sealing lip (outside) with grease.

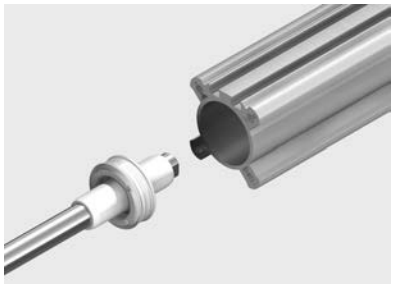

3. Position the piston flat against the front side of the cylinder barrel.

Note

The sealing lip of the lip ring may not fold back against the inside of the piston.
If necessary, use a flat object without sharp edges to insert the lip ring into the cylinder barrel.

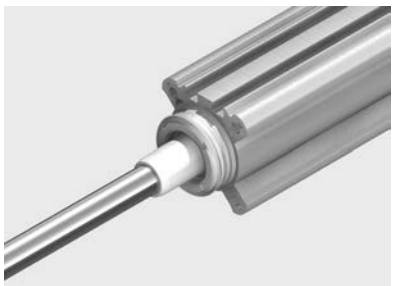

4. Insert the lip ring in the cylinder barrel by tilting and turning the ring slightly.
5. Insert the piston fully into the cylinder barrel.
6. Push the piston completely through the cylinder barrel until the first lip ring protrudes from the end of the cylinder barrel.
7. Pull back the piston rod until the piston sits fully in the cylinder barrel.

This procedure ensures that the sealing lips of the two lip rings sit correctly in the cylinder barrel.

4.3.7 Repairing and attaching the bearing and end caps

1. Remove the scraper ring [1] from the bearing cap [3].
2. Remove the O-ring [6] from the bearing and end cap.
3. Pull the holding discs [5] off the bearing and end caps.
4. Remove the buffer seal [4] from the bearing and end caps.
5. Check the bearing [2] in the bearing cap.

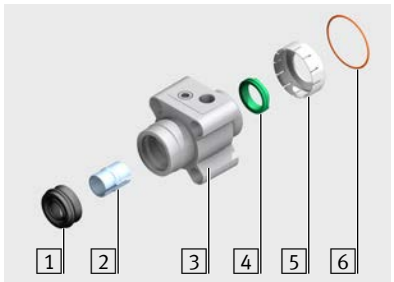

Note

ISO cylinder with metal bearing (DSBC-...-Q / L / U / L1 / E1 / E2 / E3 / EX4)
In case of identifiable damage to the bearing, which could impair its function (e.g. deposits or scoring), the bearing cap or bearing cap with end-position locking must be completely replaced.

6. **ISO cylinder with plastic bearing:**
   If damaged, push the bearing out of the bearing cap.

7. Clean the seat of the scraper ring [1].
8. Clean the seat of the buffer seal [4].
9. Clean the seat of the O-ring [5].
10. **ISO cylinder with plastic bearing:**
    Push new bearing into the bearing cap until it latches into position.
11. Fill the grease reservoir in the plain bearing with grease and apply a thin film of grease on the sliding surface.
12. **ISO cylinder with metal bearing:**
    Grease the entire inner sliding surface including the chamfer of the bearing [2] with thin film of the grease included in the set of wearing parts.

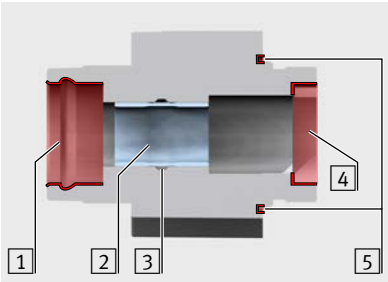

13. Grease the new scraper ring as follows:

Area	Greasing
[1] Edges of the sealing and scraper part	apply grease
[2] Space between the edges	fill with grease[1)]
[3] Sealing surfaces	apply grease

[1)] ➔ Chapter 5.2.2 on page 53

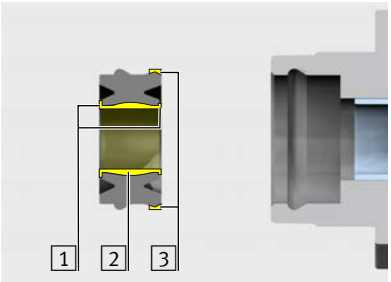

The mounting sleeve and the thrust piece can be used for both scraper ring variants ➔ Chapter 7.2 on page 54.

DSBC-...- (standard version)

Note

Note the mounting direction:
Individual sealing lip or labelling facing the outside.

14. Use a suitable thrust piece to insert the scraper ring into the bearing cap.

DSBC-...-A3 (suitable for unlubricated operation)

Note

To avoid damage to the scraper ring:
Insert the scraper ring only with matching mounting sleeve and the corresponding thrust piece.

1. Place the mounting sleeve with centring seat on the bearing cap.

Note

Note the mounting direction of the scraper ring:
Purple coloured silicone ring facing outwards.

2. Use the thrust piece and mounting sleeve to insert the scraper ring into the bearing cap.

All sizes

15. Apply a thin film of grease on the buffer seals at the front side of the sealing surface and on the sealing lip.
16. Insert the buffer seals into the bearing and end caps.
17. Place the holding discs on the bearing and end caps.
18. Grease the O-rings with the grease included in the set of wearing parts.
19. Insert the O-rings into the slot of the bearing and end cap.

Note

To avoid damage to the bearing and scraper ring:
Place the matching mounting sleeve on the thread of the piston rod
(➔ Chapter 7.2 on page 54).

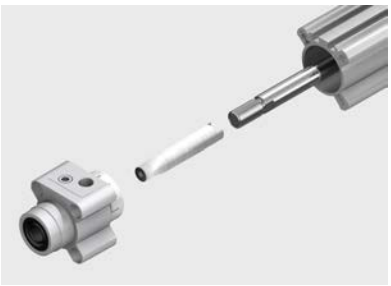

20. Guide the bearing cap over the mounting sleeve on the piston rod up to the cylinder barrel.
21. Place the end cap on the cylinder barrel.

22. Clean flange screws to remove screw locking agent.
23. Wet the flange screws with screw locking agent.
24. Screw in the flange screws.
25. Align the bearing and end cap flush with the cylinder barrel.
26. Tighten the flange screws with the appropriate tightening torque.

Size	Tightening torque
DSBC-32	7 Nm
DSBC-40	7 Nm
DSBC-50	13 Nm
DSBC-63	13 Nm
DSBC-80	25 Nm
DSBC-100	25 Nm
DSBC-125	60 Nm

27. Perform a functional test or start up the repaired ISO cylinder as described in the operating instructions.
    The operating instructions are enclosed with the ISO cylinder or can be called up on the Festo website (➔ www.festo.com/sp).

4.4 Additional repair steps for DSBC-...-C (with clamping unit)

This chapter supplements the Chapter 4.3 on page 27 with additional repair steps and notes for the version DSBC-...-C (with clamping unit).

4.4.1 Structure of the clamping unit

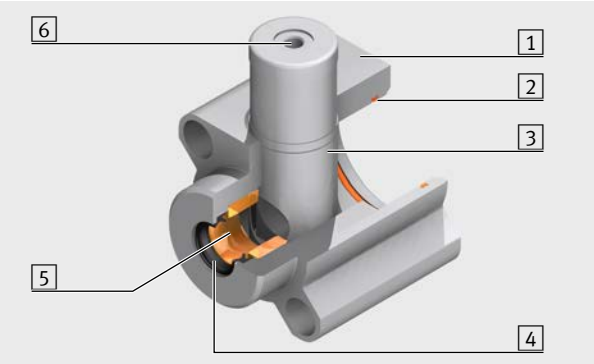

1 Holder
2 O-ring
3 Clamping cartridge
4 Scraper ring
5 Bearing
6 Connection for compressed air or mounting screw

4.4.2 Dismantling the clamping unit

Caution

Risk of injury due to unexpected movement of components.

- Before dismantling, make sure that the ISO cylinder and the clamping cartridge are vented.

Note

The holder of the clamping unit can only be pulled off the piston rod 3 if the clamp is released. Damage risk of the clamping cartridge.

When undoing the clamp using the mounting screw 1, screw it in only until the piston rod can be moved.

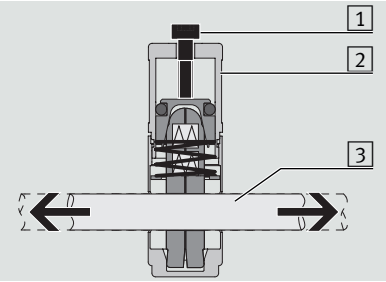

1. At the clamping cartridge 2, vent the supply port with 3 up to max. 10 bar or turn the mounting screw 1 (DSBC-32: M5; DSBC-40 ... 125: G1/8) into the supply port.

2. Remove the flange screws from the holder of the clamping unit.

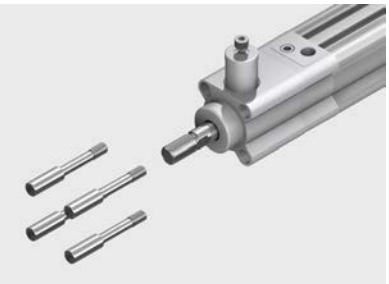

3. Remove the holder of the clamping unit.

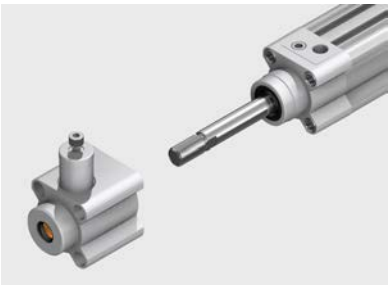

4.4.3 Repairing the clamping unit

1. Pull the clamping cartridge out of the locating hole.
2. Remove the scraper ring from the holder.
3. Remove the O-ring from the holder.
4. Clean the locating hole and clamping cartridge.
5. Clean the seat of the scraper ring.
6. Clean the seat of the O-ring.
7. Grease the scraper ring using the grease included in the set of wearing parts.
8. Insert the scraper ring in the holder of the clamping unit.
9. Insert the clamping cartridge in the locating hole.
10. Grease the O-ring using the grease included in the set of wearing parts.
11. Insert the O-ring in the holder.

Further steps: ➔ Chapter 4.3 on page 27.

4.4.4 Mounting the clamping unit

Note

The holder of the clamping unit can only be pushed onto the piston rod [3] if the clamp is released. Damage risk of the clamping cartridge.

When undoing the clamp using the mounting screw [1], screw it in only until the piston rod can be moved.

1. At the clamping cartridge [2], vent the supply port with 3 up to max. 10 bar or turn the mounting screw [1] (DSBC-32: M5; DSBC-40 … 125: G1/8) into the supply port.

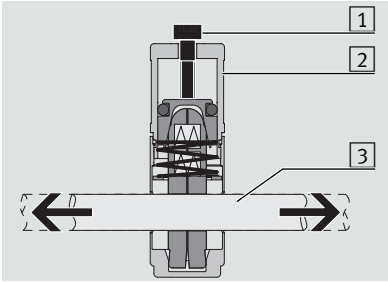

Note

To avoid damage to the bearing and scraper ring:
Place the matching mounting sleeve on the thread of the piston rod (➔ Chapter 7.2 on page 54).

2. Push the holder of the clamping unit over the mounting sleeve onto the piston rod up to the bearing cap.

3. Screw in the flange screws.
4. Align the holder of the clamping unit flush with the bearing cap.
5. Tighten the flange screws with the appropriate tightening torque.

Size	Tightening torque
DSBC-32	5 Nm
DSBC-40	5 Nm
DSBC-50	10 Nm
DSBC-63	10 Nm
DSBC-80	25 Nm
DSBC-100	25 Nm
DSBC-125	35 Nm

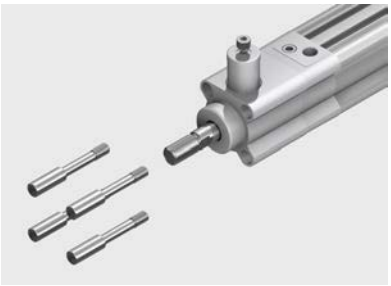

6. Remove the mounting screw from the supply port.

Further steps: ➔ Chapter 4.3 on page 27.

4.5 Additional repair steps for DSBC-...-E1 / E2 / E3 (with end-position locking)

This chapter supplements the Chapter 4.3 on page 27 with additional repair steps and notes for the version DSBC-...-E1 / E2 / E3 (with end-position locking).

4.5.1 Structure of the bearing cap with end-position locking

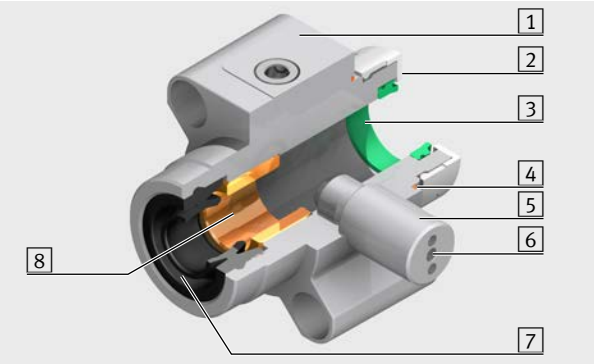

Illustrated: Bearing cap DSBC-32-...-E1/E2

1. Bearing cap
2. Holding disc (only DSBC-32 ... 63)
3. Buffer seal (only DSBC-...-PPV / PPS)
4. O-ring
5. Stop cylinder of the end-position locking
6. Connection for manual unlocking
7. Scraper ring
8. Bearing (metal).

Note

The bearing or end cap with end-position locking can only be pulled off the piston if the end-position locking is **unlocked**:

- Unlock the end-position locking manually (➔ Chapter 4.5.2 on page 35) or
- dismantle the stop cylinder (➔ Chapter 4.5.3 on page 36).

Caution

Risk of injury due to unexpected movement of components.

- Before dismantling, make sure that the ISO cylinder is vented.

4.5.2 Unlocking the end-position locking manually

1. At the connection of the stop cylinder 2, turn a screw (optional: with screwed on nut) 1 (➔ table) into the locking piston 3.

Size	Screw (minimum length)	Tensile force [N]	Stroke [mm]
DSBC-32 / 40	M2x30	4	3.5
DSBC-50 / 63	M3x40	10	4.7
DSBC-80 / 100	M3x50	25	6

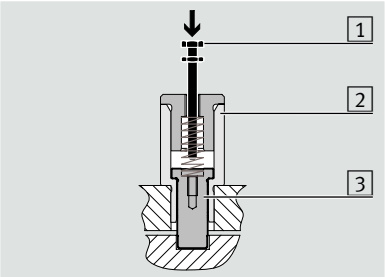

2. Pull out screw 1 with the stroke given in the table.
   This unlocks the piston rod 5.

For permanent unlocking:

- In the unlocked position, fix the screw with a lock nut 4.

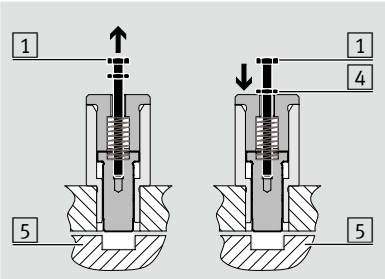

4.5.3 Dismantling the stop cylinder

1. Unscrew the stop cylinder from the bearing or end cap.
2. **DSBC-100:** Remove the spacer ring.
3. Clean the thread in the bearing or end cap to remove screw locking agent.

Illustrated: DSBC-100-...-E1/E2

Further steps: ➔ Chapter 4.3 on page 27.

4.5.4 Mounting the bearing or end cap with end-position locking

Note

The bearing or end cap with end-position locking can only be pushed onto the piston rod if the end-position locking is **unlocked**:

– Unlock the end-position locking manually (➔ Chapter 4.5.2 on page 35) or
– dismantle the stop cylinder (➔ Chapter 4.5.3 on page 36).

4.5.5 Mounting the lock cylinder

1. **DSBC-100:** Insert the spacer ring into the stop cylinder fixture in the bearing or end cap.
2. Wet the thread of the stop cylinder with screw locking agent.
3. Screw the stop cylinder into the bearing or end cap and tighten with the appropriate tightening torque.

Size	Tightening torque
DSBC-32 / 40	3 Nm
DSBC-50 /63	5 Nm
DSBC-80 / 100	10 Nm

Illustrated: DSBC-100-...-E1/E2

Note

After installing the stop cylinder, make sure that the end-position locking is released.

The screw on the stop cylinder connection is removed (➔ Chapter 4.5.6 on page 36).

4.5.6 Releasing the end-position locking

1. If used: Undo the lock nut [4] on the stop cylinder [2].
2. Remove screw [1] from the stop cylinder.
   The locking piston [3] locks the piston rod [5] in the appropriate end position.

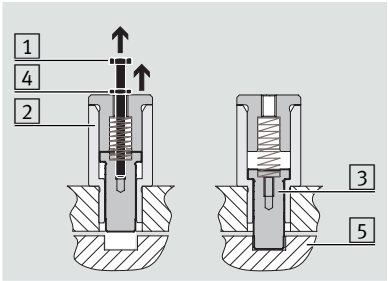

Further steps: ➔ Chapter 4.3 on page 27.

4.6 Repairing the ISO cylinder DSBC-...-T1 / T4 / A1 and DSBC-...-L / U / L1

4.7 Requirements

- Preparatory work has been completed (➔ Chapter 4.1 on page 26).
- Visual inspection has been performed (➔ Chapter 4.2 on page 26).

4.7.1 Validity

This chapter applies to the repair of the following versions of the ISO cylinder:

- DSBC-...-**L**
- DSBC-...-**U**
- DSBC-...-**L1**
- DSBC-...-**T1** (without feature “A6”)
- DSBC-...-**T4** (without feature “A6”)
- DSBC-...-**A1**

The different versions and features of the ISO cylinder are explained in Chapter 2.3 on page 11.

The following repair steps describe and show the ISO cylinder with single-ended piston rod.
Differences in the **ISO cylinder with through piston rod (DSBC-...-T)**:

- Note the differences shown in the components list (➔ Chapter 3.2 on page 20).
- Take into consideration the following for the repair steps:
  - Instead of threaded coupling: Rear piston rod
  - Instead of end cap: Rear bearing cap
  - Also replace the scraper ring in the rear bearing cap.

4.7.2 Structure of the bearing cap

The bearing and end caps of the various sizes and versions differ and can differ from the illustrations shown in the following. Before each repair, the parts lists of the online spare parts catalogue on the Festo website must be used to determine the precise type of bearing and end cap and must be taken into consideration in the repair (➔ www.festo.com/spareparts).

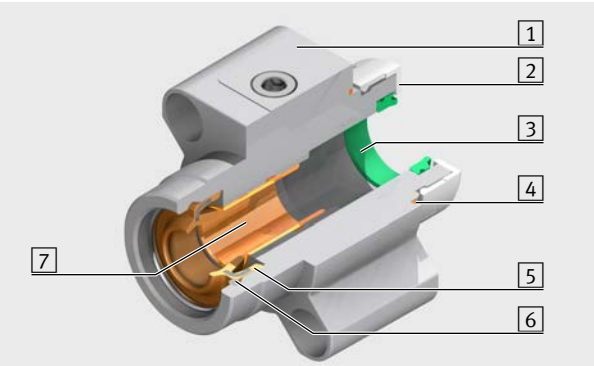

Illustrated: DSBC-32-...-PPV-...-T1 / T4

1. Bearing cap
2. Holding disc (only DSBC-32 ... 63)
3. Buffer seal (only DSBC-...-PPV / PPS)
4. O-ring
5. Scraper ring with metal insert
6. Circlip
7. DSBC-...-T1 / T4 and DSBC-...-L / U / L1: Bearing (metal).
   Not illustrated: DSBC-...-A1: Bearing (plastic).

4.7.3 Removing the bearing and end caps

1. Unscrew the flange screws in the bearing and end caps.
2. Pull the bearing and end caps off the cylinder barrel and piston rod.

4.7.4 Replacing the piston components

1. Pull the piston rod out of the cylinder barrel.
2. Inspect the cylinder barrel and piston rod for damage.

Note

The entire ISO cylinder must be replaced if the cylinder barrel, particularly the bearing surface, shows signs of significant damage.

3. Unscrew the threaded coupling from the piston rod.

Note

Note the order and alignment when pushing down the piston components. Recommendation: Place the piston components in such a way that correct assembly is ensured.

Illustrated: Multi-part piston

4. Push the piston components off the piston rod.
5. Clean the thread of the piston rod and threaded coupling to remove screw locking agent.
6. Replace the components contained in the set of wearing parts.
7. Push the piston components onto the piston rod, in the correct order and alignment.
8. Wet the threaded coupling with screw locking agent.
9. Screw the threaded coupling onto the piston rod and tighten with the appropriate torque.

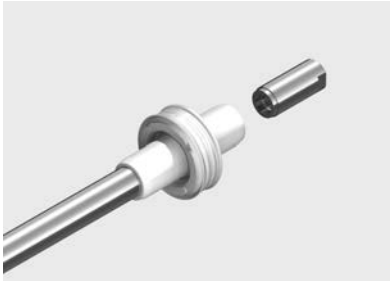

Size	Tightening torque
DSBC-32	10 Nm
DSBC-40	20 Nm
DSBC-50	30 Nm
DSBC-63	40 Nm
DSBC-80	60 Nm
DSBC-100	60 Nm
DSBC-125	170 Nm

4.7.5 Inserting the piston rod into the cylinder barrel

1. Clean the cylinder barrel with a cloth (➔ Chapter 5.1 on page 53).
2. Grease the following parts with the grease included in the set of wearing parts:

Component	Greasing
Inside surface of cylinder barrel	apply a thin film[1] of grease
Surface of piston rod	apply a thin film[1] of grease
Piston seal lip rings[3]	apply thin film[1] of grease on the outside
Piston surface between lip rings (grease reservoir[2])	fill uniformly with grease
Cushioning boss / buffer sleeve	apply thin film[1] of grease on the outside

[1] ➔ Chapter 5.2.1 on page 53

[2] ➔ Chapter 5.2.2 on page 53

[3] Do not (completely) fill the installation groove of the lip rings / T-rings and reduction of the seal to the sealing lip (outside) with grease.

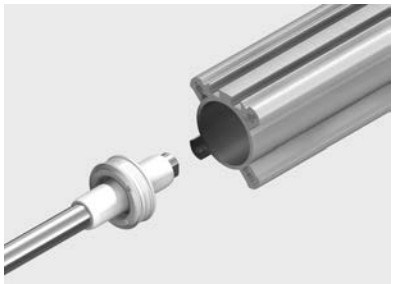

3. Position the piston flat against the front side of the cylinder barrel.

Note

The sealing lip of the lip ring may not fold back against the inside of the piston.
If necessary, use a flat object without sharp edges to insert the lip ring into the cylinder barrel.

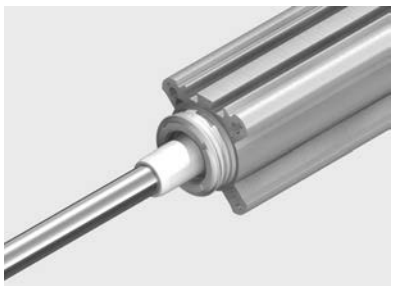

4. Insert the lip ring in the cylinder barrel by tilting and turning the ring slightly.
5. Push the piston completely through the cylinder barrel until the first lip ring protrudes from the end of the cylinder barrel.
6. Pull back the piston rod until the piston sits fully in the cylinder barrel.

This procedure ensures that the sealing lips of the two lip rings sit correctly in the cylinder barrel.

4.7.6 Repairing and attaching the bearing and end caps

1. Remove the circlip [1] and scraper ring [2] from the bearing cap [3].
2. Remove the O-ring [6] from the bearing and end cap.
3. Pull the holding discs [5] off the bearing and end caps.
4. Remove the buffer seal [4] from the bearing and end caps.
5. Check the bearing in the bearing cap.

Note

ISO cylinder with metal bearing (DSBC-...-T1 / T4 and DSBC-...-L / U / L1)
In case of identifiable damage to the bearing, which could impair the function (e.g. deposits or scoring), the bearing cap must be completely replaced.

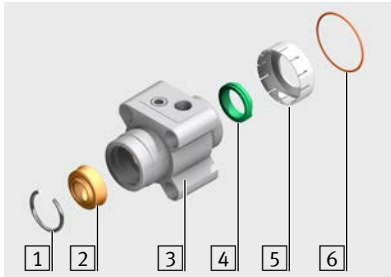

Illustrated: DSBC-32-...-T1 / T4

6. **ISO cylinder with plastic bearing (DSBC-...-A1):**
   If damaged, push the bearing out of the bearing cap.

7. Clean the seat of the scraper ring [1].
8. Clean the seat of the buffer seal [4].
9. Clean the seat of the O-ring [3].
10. **ISO cylinder with plastic bearing (DSBC-...-A1):**
    Push new bearing [2] into the bearing cap until it latches into position.
11. Fill the grease reservoir in the plain bearing with grease and apply a thin film of grease on the sliding surface.
12. **ISO cylinder with metal bearing (DSBC-...-T1 / T4 and DSBC-...-L / U / L1):**
    Grease the entire inner sliding surface including the chamfer of the bearing [2] with thin film of the grease included in the set of wearing parts.

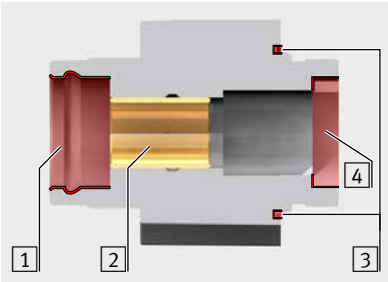

13. Grease the new scraper ring as follows:

Area	Greasing
[1] Edges of the sealing and scraper part	apply grease
[2] Space between the edges	fill with grease[1)]
[3] Sealing surfaces	apply grease

[1)] ➔ Chapter 5.2.2 on page 53

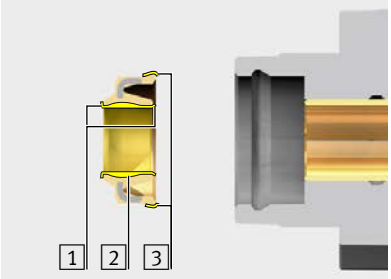

The mounting sleeve and the thrust piece can be used for both scraper ring variants ➔ Chapter 7.2 on page 54.

Note

Note the mounting direction of the scraper ring:
Individual sealing lip or labelling facing the outside.

14. Use a suitable thrust piece to insert the scraper ring into the bearing cap.

15. Push together the circlip (e.g. with the help of pliers) and insert into the bearing cap.

16. Apply a thin film of grease on the buffer seals at the front side of the sealing surface and on the sealing lip.
17. Insert the buffer seals into the bearing and end caps.
18. Place the holding discs on the bearing and end caps.
19. Grease the O-rings with the grease included in the set of wearing parts.
20. Insert the O-rings into the slot of the bearing and end cap.

Note

To avoid damage to the bearing and scraper ring:
Place the matching mounting sleeve on the thread of the piston rod
(➔ Chapter 7.2 on page 54).

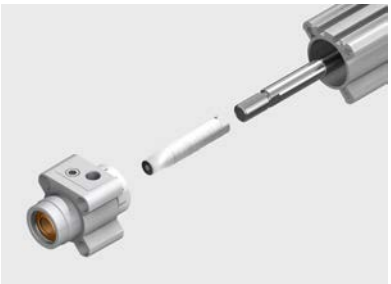

21. Guide the bearing cap over the mounting sleeve on the piston rod up to the cylinder barrel.
22. Place the end cap on the cylinder barrel.

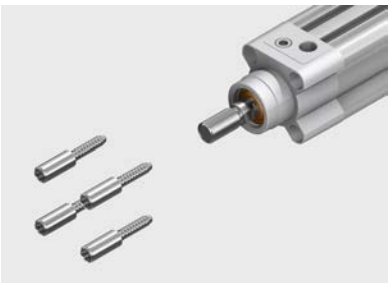

23. Clean flange screws to remove screw locking agent.
24. Wet the flange screws with screw locking agent.
25. Screw in the flange screws.
26. Align the bearing and end cap flush with the cylinder barrel.
27. Tighten the flange screws with the appropriate tightening torque.

Size	Tightening torque
DSBC-32	7 Nm
DSBC-40	7 Nm
DSBC-50	13 Nm
DSBC-63	13 Nm
DSBC-80	25 Nm
DSBC-100	25 Nm
DSBC-125	60 Nm

28. Perform a functional test or start up the repaired ISO cylinder as described in the operating instructions.
    The operating instructions are enclosed with the ISO cylinder or can be called up on the Festo website (➔ www.festo.com/sp).

4.8 Repairing the ISO cylinder DSBC-...-T3 / A2

4.8.1 Requirements

– Preparatory work has been completed (➔ Chapter 4.1 on page 26).
– Visual inspection has been performed (➔ Chapter 4.2 on page 26).

4.8.2 Validity

This chapter applies to the repair of the following versions of the ISO cylinder:

– DSBC-...-**T3** (without feature “A6”)
– DSBC-...-**A2**

The different versions and features of the ISO cylinder are explained in Chapter 2.3 on page 11.

The following repair steps describe and show the ISO cylinder with single-ended piston rod.
Differences in the **ISO cylinder with through piston rod (DSBC-...-T)**:

- Note the differences shown in the components list (➔ Chapter 3.3 on page 22).
- Take into consideration the following for the repair steps:
  – Instead of threaded coupling: Rear piston rod
  – Instead of end cap: Rear bearing cap
  – Also replace the scraper ring in the rear bearing cap.

4.8.3 Structure of the bearing cap

The bearing and end caps of the various sizes and versions differ and can differ from the illustrations shown in the following. Before each repair, the parts lists of the online spare parts catalogue on the Festo website must be used to determine the precise type of bearing and end cap and must be taken into consideration in the repair (➔ www.festo.com/spareparts).

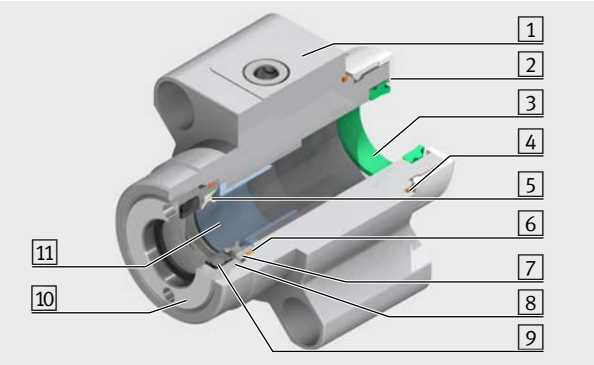

Illustrated: DSBC-32-...-PPV-...-T3

1 Bearing cap
2 Holding disc (only DSBC-32 ... 63)
3 Buffer seal (only DSBC-...-PPV / PPS)
4 O-ring
5 Scraper ring
6 O-ring
7 Insert sleeve
8 Excluder
9 O-ring
10 DSBC-32 ... 100: Screwed insert
DSBC-125 (not illustrated): Circlip
11 DSBC-32 ... 100-...-T3: Flanged bearing (plastic).
Not illustrated:
DSBC-125-...-T3 / A2: Bearing (plastic).
DSBC-32 ... 100-A2: Bearing (metal).

4.8.4 Removing the bearing and end caps

1. Unscrew the flange screws in the bearing and end caps.
2. Pull the bearing and end caps off the cylinder barrel and piston rod.

4.8.5 Replacing the piston components

1. Pull the piston rod out of the cylinder barrel.
2. Inspect the cylinder barrel and piston rod for damage.

Note

The entire ISO cylinder must be replaced if the cylinder barrel, particularly the bearing surface, shows signs of significant damage.

3. Unscrew the threaded coupling from the piston rod.

Note

Note the order and alignment when pushing down the piston components. Recommendation: Place the piston components in such a way that correct assembly is ensured.

Illustrated: Multi-part piston

4. Push the piston components off the piston rod.
5. Clean the thread of the piston rod and threaded coupling to remove screw locking agent.
6. Replace the components contained in the set of wearing parts.
7. Push the piston components onto the piston rod, in the correct order and alignment.
8. Wet the threaded coupling with screw locking agent.
9. Screw the threaded coupling onto the piston rod and tighten with the appropriate torque.

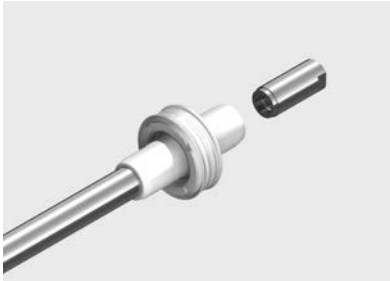

Size	Tightening torque
DSBC-32	10 Nm
DSBC-40	20 Nm
DSBC-50	30 Nm
DSBC-63	40 Nm
DSBC-80	60 Nm
DSBC-100	60 Nm
DSBC-125	170 Nm

4.8.6 Inserting the piston rod into the cylinder barrel

1. Clean the cylinder barrel with a cloth (➔ Chapter 5.1 on page 53).
2. Grease the following components with the grease included in the set of wearing parts:

Component	Greasing
Inside surface of cylinder barrel	apply a thin film[1] of grease
Surface of piston rod	apply a thin film[1] of grease
Piston seal lip rings[3]	apply thin film[1] of grease on the outside
Piston surface between lip rings (grease reservoir[2])	fill uniformly with grease
Cushioning boss / buffer sleeve	apply thin film[1] of grease on the outside

[1] ➔ Chapter 5.2.1 on page 53

[2] ➔ Chapter 5.2.2 on page 53

[3] Do not (completely) fill the installation groove of the lip rings / T-rings and reduction of the seal to the sealing lip (outside) with grease.

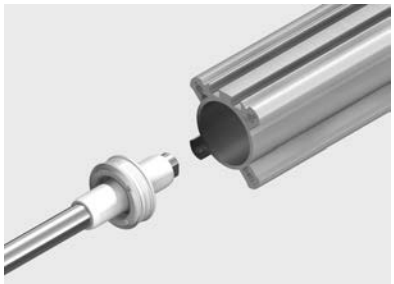

3. Position the piston flat against the front side of the cylinder barrel.

Note

The sealing lip of the lip ring may not fold back against the inside of the piston.
If necessary, use a flat object without sharp edges to insert the lip ring into the cylinder barrel.

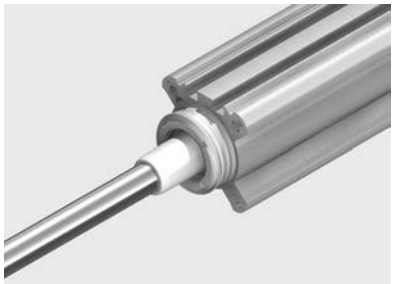

4. Insert the lip ring in the cylinder barrel by tilting and turning the ring slightly.
5. Push the piston completely through the cylinder barrel until the first lip ring protrudes from the end of the cylinder barrel.
6. Pull back the piston rod until the piston sits fully in the cylinder barrel.

This procedure ensures that the sealing lips of the two lip rings sit correctly in the cylinder barrel.

4.8.7 Repairing and attaching the bearing and end caps

DSBC-32 ... 100

1. Unscrew the screwed insert [1] from the bearing cap [8].
2. Remove the excluder [3] and O-ring [2] from the screwed insert.
3. Remove the insert sleeve [4] with scraper ring [5] and O-ring [6] from the bearing cap.
4. Separate the scraper ring and O-ring from the insert sleeve.
5. Check the flanged bearing [7] in the bearing cap.

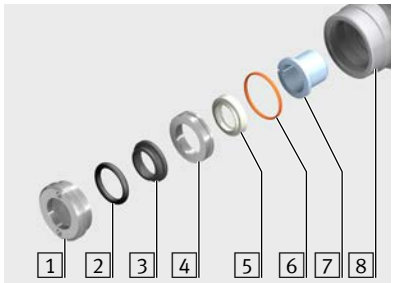

Illustrated: DSBC-32-...-T3

DSBC-125

1. Remove the circlip [1] from the bearing cap [8].
2. Remove the insert sleeve [4] with excluder [3], O-ring [2], scraper ring [5] and O-ring [6] from the bearing cap.
3. Separate the scraper ring and O-ring from the insert sleeve.
4. Remove the excluder and O-ring from the insert sleeve.
5. Check the bearing [7] in the bearing cap.

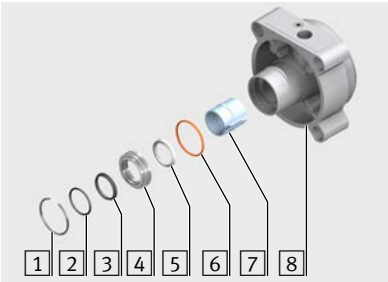

Illustrated: DSBC-125-...-T3

Note

ISO cylinder with metal bearing (DSBC-...-A2)
In case of identifiable damage to the bearing, which could impair the function (e.g. deposits or scoring), the bearing cap must be completely replaced.

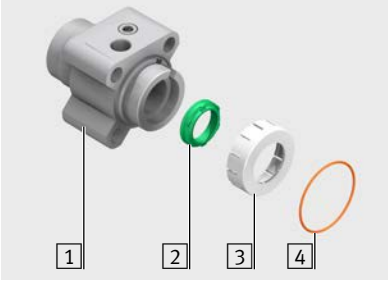

6. **ISO cylinder with metal bearing (DSBC-...-A2):**
   Clean the bearing.
7. Grease the entire inner sliding surface including the chamfer of the bearing with a thin film of the grease included in the set of wearing parts.
8. **ISO cylinder with plastic bearing (DSBC-...-T3):**
   If damaged, push the bearing out of the bearing cap.
9. **All sizes**
10. Remove the O-ring [4] from the bearing [1] and end cap.
11. Pull the holding discs [3] off the bearing and end caps.
12. Remove the buffer seal [2] from the bearing and end caps.

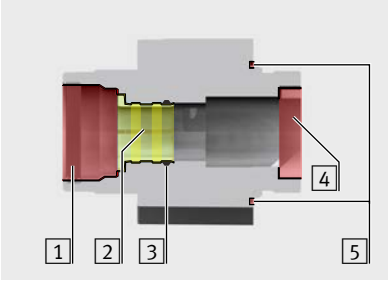

13. **DSBC-32 ... 100:** Clean the thread of the bearing cap and the screw insert to remove screw locking agent.
14. Clean the seat of the insert sleeve [1] in the bearing cap.
15. Clean the seat of the buffer seal [4].
16. Clean the seat of the O-ring [5].
17. **ISO cylinder with plastic bearing (DSBC-...-T3):**
    Insert new flanged bearing into the bearing cap.
18. **DSBC-125-...-T3** Push the bearing until the middle shoulder of the bearing latches into the slot [3] in the bearing cap.
19. Grease the inner sliding surfaces of the bearing [2] with a thin film of the grease included in the set of wearing parts.
20. **DSBC-125-...-T3:** Fill the grease reservoir in the bearing with the grease included in the set of wearing parts.

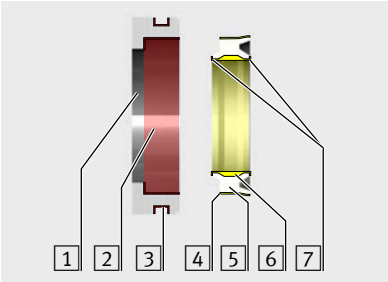

21. Clean the seat of the scraper ring [2] and of the O-ring [3] on the insert sleeve [1].
22. Grease the new scraper ring [5] as follows:

Area	Greasing
[4] Sealing surfaces	apply grease
[6] Space between the edges	fill with grease[1)]
[7] Edges of the sealing and scraper part	apply grease

[1)] → Chapter 5.2.2 on page 53

Note

Note the mounting direction of the scraper ring:
Protruding sealing lip facing outwards, grease reservoir facing inwards.

23. Insert the greased scraper ring into the insert sleeve.
24. Grease the new O-ring with the grease included in the set of wearing parts.
25. Insert the O-ring into the outer slot +-of the insert sleeve.

DSBC-125

1. Grease the O-ring [1] and bearing surface of the excluder [2] using the grease included in the set of wearing parts.

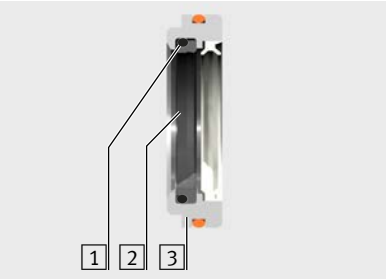

Note

Note the mounting direction and order:
O-ring between the outside insert sleeve and the excluder.

2. Insert the O-ring and excluder together into the insert sleeve [3].

All sizes

Note

Note the mounting direction of the insert sleeve: Chamfer faces the bearing cap.

26. Insert the insert sleeve into the bearing cap.

DSBC-32 ... 100

27. Grease the O-ring and bearing surface of the excluder using the grease included in the set of wearing parts.

Note

Note the mounting direction and order:
O-ring between the screwed insert and excluder.

28. Insert the O-ring and excluder together into the screwed insert.

29. Wet the thread of the screwed insert with screw locking agent.
30. Screw the screwed insert into the bearing cap and tighten with the appropriate tightening torque.

Size	Tightening torque
DSBC-32	4 Nm
DSBC-40	8 Nm
DSBC-50	11 Nm
DSBC-63	11 Nm
DSBC-80	15 Nm
DSBC-100	15 Nm

DSBC-125

- Push together the circlip (e.g. using pliers) and insert into the bearing cap.

All sizes

31. Apply thin film of grease on the buffer seals on the front side facing the sealing surface and on the sealing lip using the grease included in the set of wearing parts.
32. Insert the buffer seals into the bearing and end caps.
33. Place the holding discs on the bearing and end caps.
34. Grease the O-rings with the grease included in the set of wearing parts.
35. Insert the O-rings into the slot of the bearing and end cap.

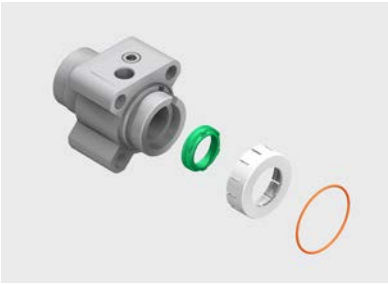

Note

To avoid damage to the bearing and scraper ring:
Place the matching mounting sleeve on the thread of the piston rod
(➔ Chapter 7.2 on page 54).

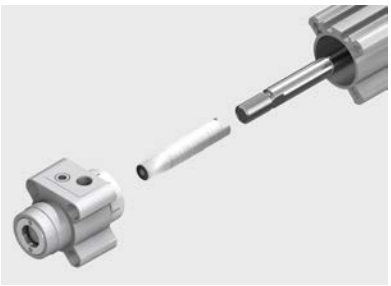

36. Guide the bearing cap over the mounting sleeve on the piston rod up to the cylinder barrel.
37. Place the end cap on the cylinder barrel.

38. Clean flange screws to remove screw locking agent.
39. Wet the flange screws with screw locking agent.
40. Screw in the flange screws.
41. Align the bearing and end cap flush with the cylinder barrel.
42. Tighten the flange screws with the appropriate tightening torque.

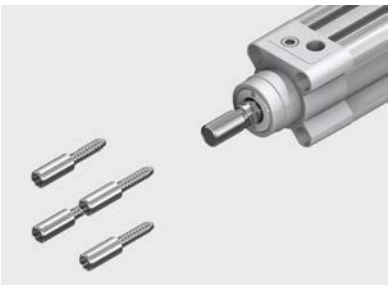

Size	Tightening torque
DSBC-32	7 Nm
DSBC-40	7 Nm
DSBC-50	13 Nm
DSBC-63	13 Nm
DSBC-80	25 Nm
DSBC-100	25 Nm
DSBC-125	60 Nm

43. Perform a functional test or start up the repaired ISO cylinder as described in the operating instructions.
    The operating instructions are enclosed with the ISO cylinder or can be called up on the Festo website (➔ www.festo.com/sp).

4.9 Repairing the ISO cylinder DSBC-...-A6

4.9.1 Requirements

– Preparatory work has been completed (➔ Chapter 4.1 on page 26).
– Visual inspection has been performed (➔ Chapter 4.2 on page 26).

4.9.2 Validity

This chapter applies to the repair of the following versions of the ISO cylinder:

– DSBC-...-**A6 / T1-A6 / T3-A6 / T4-A6**

The different versions and features of the ISO cylinder are explained in Chapter 2.3 on page 11.

The following repair steps describe and show the ISO cylinder with single-ended piston rod.

Differences in the **ISO cylinder with through piston rod (DSBC-...-T)**:

- Note the differences shown in the components list (➔ Chapter 3.4 on page 24).
- Take into consideration the following for the repair steps:
  – Instead of threaded coupling: Rear piston rod
  – Instead of end cap: Rear bearing cap
  – Also replace the scraper ring in the rear bearing cap.

4.9.3 Structure of the bearing cap

The bearing and end caps of the various sizes and versions differ and can differ from the illustrations shown in the following. Before each repair, the parts lists of the online spare parts catalogue on the Festo website must be used to determine the precise type of bearing and end cap and must be taken into consideration in the repair (➔ www.festo.com/spareparts).

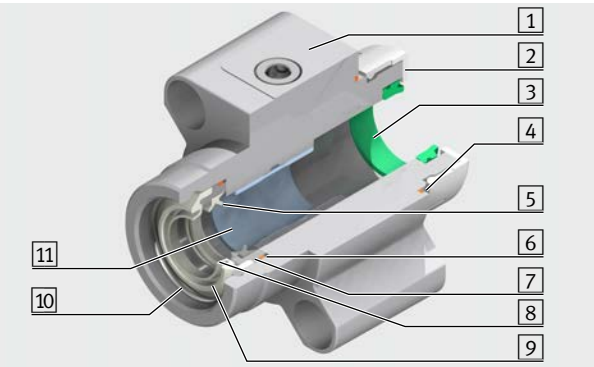

Illustrated: DSBC-32-...-T3-A6

1 Bearing cap
2 Holding disc (only DSBC-32 ... 63)
3 Buffer seal (only DSBC-...-PPV / PPS)
4 O-ring
5 Scraper ring
6 O-ring
7 Insert sleeve
8 Wiper seal
9 Distance sleeve
10 Circlip
11 DSBC-...-A6 / T3-A6: Bearing (plastic).
Not illustrated:
DSBC-...-T1-A6 / T4-A6: Bearing (metal).

4.9.4 Removing the bearing and end caps

1. Unscrew the flange screws in the bearing and end caps.
2. Pull the bearing and end caps off the cylinder barrel and piston rod.

4.9.5 Replacing the piston components

1. Pull the piston rod out of the cylinder barrel.
2. Inspect the cylinder barrel and piston rod for damage.

Note

The entire ISO cylinder must be replaced if the cylinder barrel, particularly the bearing surface, shows signs of significant damage.

3. Unscrew the threaded coupling from the piston rod.

Note

Note the order and alignment when pushing down the piston components. Recommendation: Place the piston components in such a way that correct assembly is ensured.

Illustrated: Multi-part piston

4. Push the piston components off the piston rod.
5. Clean the thread of the piston rod and threaded coupling to remove screw locking agent.
6. Replace the components contained in the set of wearing parts.
7. Push the piston components onto the piston rod, in the correct order and alignment.
8. Wet the threaded coupling with screw locking agent.
9. Screw the threaded coupling onto the piston rod and tighten with the appropriate torque.

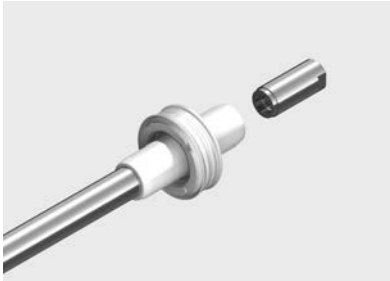

Size	Tightening torque
DSBC-32	10 Nm
DSBC-40	20 Nm
DSBC-50	30 Nm
DSBC-63	40 Nm
DSBC-80	60 Nm
DSBC-100	60 Nm
DSBC-125	170 Nm

4.9.6 Inserting the piston rod into the cylinder barrel

1. Clean the cylinder barrel with a cloth (➔ Chapter 5.1 on page 53).
2. Grease the following components with the grease included in the set of wearing parts:

Component	Greasing
Inside surface of cylinder barrel	apply a thin film[1] of grease
Surface of piston rod	apply a thin film[1] of grease
Piston seal lip rings[3]	apply thin film[1] of grease on the outside
Piston surface between lip rings (grease reservoir[2])	fill uniformly with grease
Cushioning boss / buffer sleeve	apply thin film[1] of grease on the outside

[1] ➔ Chapter 5.2.1 on page 53

[2] ➔ Chapter 5.2.2 on page 53

[3] Do not (completely) fill the installation groove of the lip rings / T-rings and reduction of the seal to the sealing lip (outside) with grease.

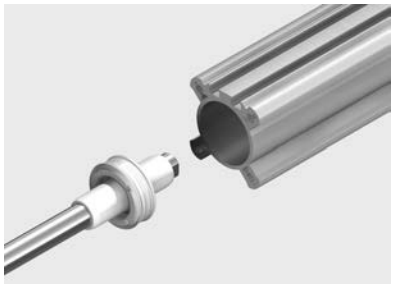

3. Position the piston flat against the front side of the cylinder barrel.

Note

The sealing lip of the lip ring may not fold back against the inside of the piston.
If necessary, use a flat object without sharp edges to insert the lip ring into the cylinder barrel.

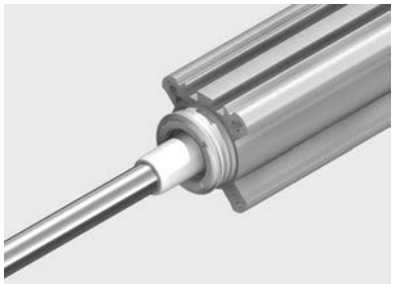

4. Insert the lip ring in the cylinder barrel by tilting and turning the ring slightly.
5. Push the piston completely through the cylinder barrel until the first lip ring protrudes from the end of the cylinder barrel.
6. Pull back the piston rod until the piston sits fully in the cylinder barrel.

This procedure ensures that the sealing lips of the two lip rings sit correctly in the cylinder barrel.

4.9.7 Repairing and attaching the bearing and end caps

1. Remove the circlip [1] from the bearing cap [8].
2. Remove the distance sleeve [2] from the bearing cap.
3. Remove the scraper [3] from the bearing cap.
4. Remove the insert sleeve [4] with scraper ring [5] and O-ring [6] from the bearing cap.
5. Separate the scraper ring and O-ring from the insert sleeve.
6. Check the bearing [7] in the bearing cap.

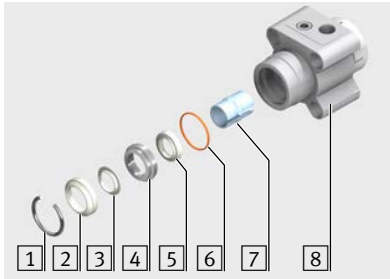

7. Remove the O-ring [4] from the bearing [1] and end cap.
8. Pull the holding discs [3] off the bearing and end caps.
9. Remove the buffer seal [2] from the bearing and end caps.

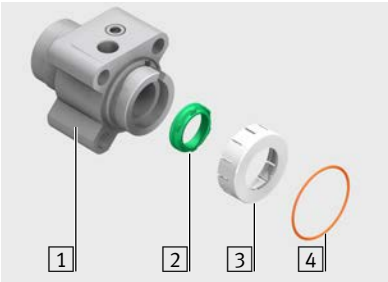

Note

ISO cylinder with metal bearing (DSBC-...-T1-A6 / T4-A6)
In case of identifiable damage to the bearing, which could impair the function (e.g. deposits or scoring), the bearing cap must be completely replaced.

10. **ISO cylinder with plastic bearing (DSBC-...-A6 / T3-A6):**
    If damaged, push the bearing out of the bearing cap.

11. Clean the seat of the circlip.
12. Clean the seat of the insert sleeve [1].
13. Clean the seat of the buffer seal [4].
14. Clean the seat of the O-ring [5].
15. **ISO cylinder with plastic bearing (DSBC-...-A6 / T3-A6):**
    Push new bearing into the bearing cap until it latches into position.
16. Grease the inner sliding surfaces of the bearing [2] with a thin film of the grease included in the set of wearing parts.
17. **ISO cylinder with metal bearing (DSBC-...-T1-A6 / T4-A6)**
    Fill the grease reservoir in the bearing using the grease included in the set of wearing parts.

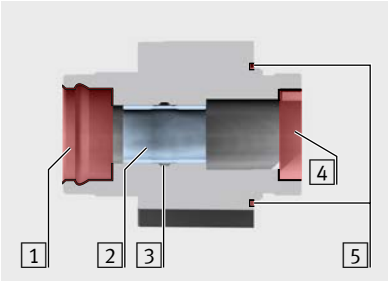

18. Clean the seat of the scraper ring [2] and of the O-ring [3] on the insert sleeve [1].
19. Grease the new scraper ring [5] as follows:

Area	Greasing
[4] Sealing surfaces	apply grease
[6] Space between the edges	fill with grease[1)]
[7] Edges of the sealing and scraper part	apply grease

[1)] → Chapter 5.2.2 on page 53

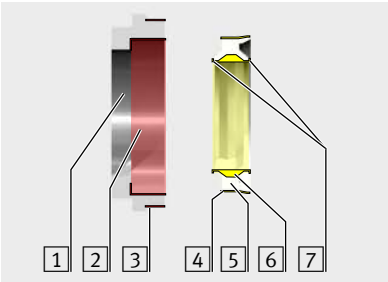

Note

Note the mounting direction of the scraper ring:
Protruding sealing lip facing outwards, grease reservoir facing inwards.

20. Insert the greased scraper ring into the insert sleeve.
21. Grease the new O-ring with the grease included in the set of wearing parts.
22. Insert the O-ring into the outer slot +-of the insert sleeve.

Note

Note the mounting direction of the insert sleeve: Chamfer faces the bearing cap.

23. Insert the insert sleeve into the bearing cap.

24. Insert the scraper into the bearing cap.
25. Insert the distance sleeve into the bearing cap.
26. Push together the circlip (e.g. using pliers) and insert into the bearing cap.

27. Apply a thin film of grease on the buffer seals at the front side of the sealing surface and on the sealing lip.
28. Insert the buffer seals into the bearing and end caps.
29. Place the holding discs on the bearing and end caps.
30. Grease the O-rings with the grease included in the set of wearing parts.
31. Insert the O-rings into the slot of the bearing and end cap.

Note

To avoid damage to the bearing and scraper ring:
Place the matching mounting sleeve on the thread of the piston rod
(➔ Chapter 7.2 on page 54).

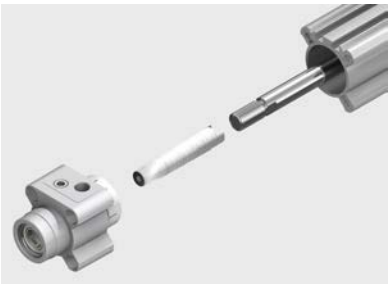

32. Guide the bearing cap over the mounting sleeve on the piston rod up to the cylinder barrel.
33. Place the end cap on the cylinder barrel.

34. Clean flange screws to remove screw locking agent.
35. Wet the flange screws with screw locking agent.
36. Screw in the flange screws.
37. Align the bearing and end cap flush with the cylinder barrel.
38. Tighten the flange screws with the appropriate tightening torque.

Size	Tightening torque
DSBC-32	7 Nm
DSBC-40	7 Nm
DSBC-50	13 Nm
DSBC-63	13 Nm
DSBC-80	25 Nm
DSBC-100	25 Nm
DSBC-125	60 Nm

39. Perform a functional test or start up the repaired ISO cylinder as described in the operating instructions.
The operating instructions are enclosed with the ISO cylinder or can be called up on the Festo website (➔ www.festo.com/sp).

5 Cleaning and greasing

5.1 Cleaning

The seals are designed so that the lubricant film applied to them is effective for the entire service life of the seal. The ISO cylinder must be cleaned thoroughly to remove all foreign particles, machining residues and old lubricants before it is greased to ensure this life-time lubrication is retained.

All non-abrasive cleaning agents are permissible.

Note

Regular removal of the lubricant on the surface of the piston rod reduces its service life.

Note

- Clean with a soft, lint-free cloth and non-abrasive cleaning agents.
- Check the compatibility of the cleaning agent with the materials to be cleaned.

5.2 Greasing

The various components and seals of the ISO cylinder require different levels of greasing depending on a number of factors.

Note

To ensure the life-time lubrication and so that a uniform lubricant film results:

- After greasing, move the piston rod with mounted piston and piston seals several times along the entire stroke of the cylinder barrel.

5.2.1 Thin grease film

A film of grease covers the bearing surface so that a continuous film of grease exists and the grease colour darkens the surface slightly.

Recommendation:

- Apply the grease with a paint brush, a fine bristle brush or similar.

5.2.2 Grease reservoir

Grease quantity enclosed between two sealing rings or in the enclosed ring volumes.

6 Maintenance and care

The ISO cylinders are maintenance-free, due to their life-time lubrication.

7 Tools

This chapter provides an overview of the tools and accessories required to repair the ISO cylinder.

7.1 Standard tools

The following standard tools are required to repair the ISO cylinder:

- Screwdriver
- Wrench
- Flat pliers
- Torque wrench
- Face pin spanner (only for ISO cylinder DSBC-32 ... 100-...-T3)

7.2 Special tools

The following special tools are required to repair the ISO cylinder:

Designation	Additional information	Figure
Mounting sleeve for piston rod with male thread (Must be produced by the customer.)	To protect the piston rod seal and the bearing in the bearing cap or sealing seat during the repair work. The schematic diagram is included in **“Tool and repair accessories”** information brochure.	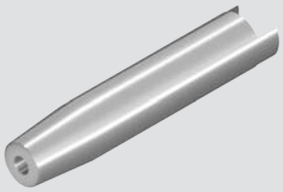
Mounting sleeve and mandrel for piston rod with female thread (Must be produced by the customer.)	To protect the piston rod seal and the bearing in the bearing cap or sealing seat during the repair work. A mandrel is additionally inserted into the female thread of the piston rod for piston rods with female thread. The mounting sleeve is pushed onto this mandrel. The schematic diagrams are included in **“Tool and repair accessories”** information brochure.	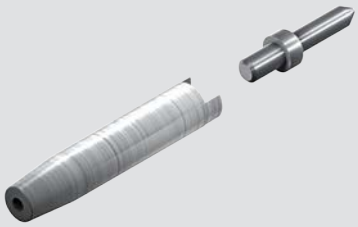
Mounting sleeve and thrust piece for scraper ring on the DSBx (Must be produced by the customer.)	Prevents damage to the scraper ring when inserting it into the bearing cap. The schematic diagrams are included in **“Tool and repair accessories”** information brochure.	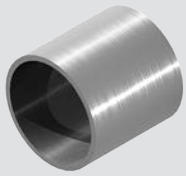 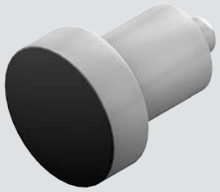

Further information on the special tools and on the schematic diagram is included in the **"Tools and repair accessories"** information brochure. The information brochure can be found in the online spare parts catalogue on the Festo website (➔ Tools and repair accessories.pdf).

8 Liability

The General Terms and Conditions of Business (AGB) of Festo AG & Co. KG apply, which can be viewed on the Festo website (➔ www.festo.com).

Conditions of use for “Electronic documentation”

I. Protection rights and scope of use

The file of your choice is subject to protective provisions. Festo or third parties have protective rights to this electronic documentation, which Festo provides both on portable data storage devices (diskettes, CD ROM, removable disks) as well as on the Internet and/ or intranet, referred to as electronic documentation below. In so far as third parties have whole or partial right of access to this electronic documentation, Festo has the appropriate rights of use. Festo permits the user the use under the following conditions:

1. Scope of use

a) The user of the electronic documentation is allowed to use this documentation for his own, exclusively company-internal purposes on any number of machines within his business premises (location). This right of use includes exclusively the right to save the electronic documentation on the central processors (machines) used at the location.

b) The electronic documentation may be printed out on a printer at the location of the user as often as desired, providing this printout is printed with or kept in a safe place together with these conditions of use and other user instructions.

c) With the exception of the Festo logo, the user has the right to use pictures and texts from the electronic documentation for creating his own machine and system documentation. The use of the Festo logo requires written consent from Festo. The user is responsible for ensuring that the pictures and texts used match the machine/system or the product.

d) Further uses are permitted within the following framework:

Copying exclusively for use within the framework of machine and system documentation from electronic documents of all documented supplier components. Demonstrating to third parties exclusively under guarantee that no data material is stored wholly or partly in other networks or other data storage devices or can be reproduced there.

Passing on printouts to third parties not covered by the regulation in item 3, as well as any processing or other use are not permitted.

2. Copyright note

Every “electronic document” receives a copyright note. This note must be included on every copy and every printout.

Example: E 2003, Festo AG & Co. KG, D-73726 Esslingen

3. Transferring the authorisation of use

The user can transfer the authorization of use in the scope of and with the limitations of the conditions in accordance with items 1 and 2 completely to a third party. The third party must be made explicitly aware of these conditions of use.

II. Exporting the electronic documentation

When exporting the electronic documentation, the licence holder must observe the export regulations of the exporting country and those of the purchasing country.

III. Warranty

1. Festo products are being continuously developed with regard to hardware and software. The hardware status and, where applicable, the software status of the product is given in the product labelling. If the electronic documentation, in whatever form, is not supplied with the product, i.e. is not supplied on a data storage device (diskettes, CD ROM, removable disk) as a delivery unit with the relevant product, Festo does not guarantee that the electronic documentation corresponds to every hardware and software status of the product. In this case, the printed documentation from Festo accompanying the product alone is decisive for ensuring that the hardware and software status of the product matches that of the electronic documentation.

2. The information contained in this electronic documentation can be amended by Festo without prior notice and does not commit Festo in any way.

IV. Liability/limitations on liability

1. Festo provides this electronic documentation in order to assist the user in creating his machine and system documentation. In the case that electronic documentation in the form of data storage devices (diskettes, CD ROM, removable disk) does not accompany a product, i.e. is not automatically supplied together with that product, Festo does not guarantee that the electronic documentation separately available/supplied matches the product actually used by the user.

The latter applies particularly to extracts of the documents for the user’s own documentation. The guarantee and liability for separately available/ supplied portable data storage devices, i.e. with the exception of electronic documentation provided on the Internet/intranet, are limited exclusively to proper duplication of the software, whereby Festo guarantees that in each case the relevant portable data storage device or software contains the latest status of the documentation. In respect of the electronic documentation available on the Internet/Intranet, there is no guarantee that it will have the same version status as the last printed edition.

2. Furthermore, Festo cannot be held liable for the lack of economic success or for damage or claims by third parties resulting from the use of the documentation by the user, with the exception of claims arising from infringement of the protection rights of third parties concerning the use of the electronic documentation.

3. The limitations on liability as per paragraphs 1 and 2 do not apply if, in cases of intent or gross negligence or lack of warranted quality, a compulsory liability exists. In such a case, Festo’s liability is limited to the damage discernable by Festo when the concrete circumstances are made known.

V. Safety guidelines/documentation

Warranty and liability claims in conformity with the aforementioned regulations (points III. and IV) may be raised only if the user has observed the safety guidelines of the documentation in conjunction with the use of the machine and its safety guidelines. The user himself is responsible for ensuring that the electronic documentation, when not supplied with the product, matches the product actually used by the user.