Level Pressure Flow Temperature Liquid Analysis Registration Systems Components Services Solutions

Technical Information

Omnigrad T TST310

RTD thermometer
Can be screwed in or inserted
With fixed connected cable and anti-kink spring

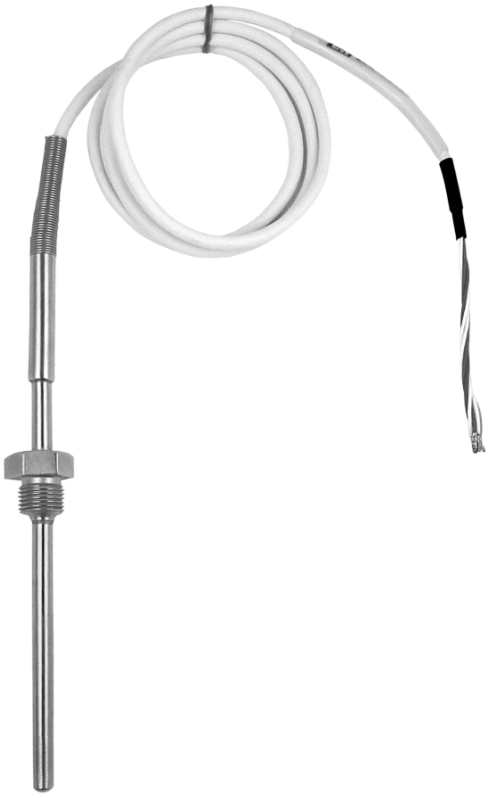

Application

The resistance thermometer is specially suited to temperature measurement in machinery, laboratory equipment and plants in gaseous or liquid media like air, water, oil and others.

Your benefits

- High flexibility through user-specific insertion lengths and variable process connections
- Fast response time
- Single or double Pt100 sensor of accuracy class A, B, or AA as per IEC 60751
- Types of protection for use in hazardous locations:
  Intrinsic Safety (Ex ia)
  Non-Sparking (Ex nA)

TI00085T/09/en
71108017

Endress+Hauser
People for Process Automation

Function and system design

Measuring principle

These resistance thermometers use a Pt100 temperature sensor according to IEC 60751. This temperature sensor is a temperature-sensitive platinum resistor with a resistance of 100 Ω at 0 °C (32 °F) and a temperature coefficient $\alpha = 0.003851\ °C^{-1}$.

There are generally two different kinds of platinum resistance thermometers:

- **Wire wound (WW)**: Here, a double coil of fine, high-purity platinum wire is located in a ceramic support. This is then sealed top and bottom with a ceramic protective layer. Such resistance thermometers not only facilitate very reproducible measurements but also offer good long-term stability of the resistance/ temperature characteristic within temperature ranges up to 600 °C (1112 °F). This type of sensor is relatively large in size and it is comparatively sensitive to vibrations.
- **Thin film platinum resistance thermometers (TF):** A very thin, ultrapure platinum layer, approx. 1 µm thick, is vaporized in a vacuum on a ceramic substrate and then structured photolithographically. The platinum conductor paths formed in this way create the measuring resistance. Additional covering and passivation layers are applied and reliably protect the thin platinum layer from contamination and oxidation even at high temperatures.

The primary advantages of thin-film temperature sensors over wire wound versions are their smaller sizes and better vibration resistance. A relatively low principle-based deviation of the resistance/temperature characteristic from the standard characteristic of IEC 60751 can frequently be observed among TF sensors at high temperatures. As a result, the tight limit values of tolerance category A as per IEC 60751 can only be observed with TF sensors at temperatures up to approx. 300 °C (572 °F). For this reason, thin-film sensors are generally only used for temperature measurements in ranges below 400 °C (932 °F).

Measuring system

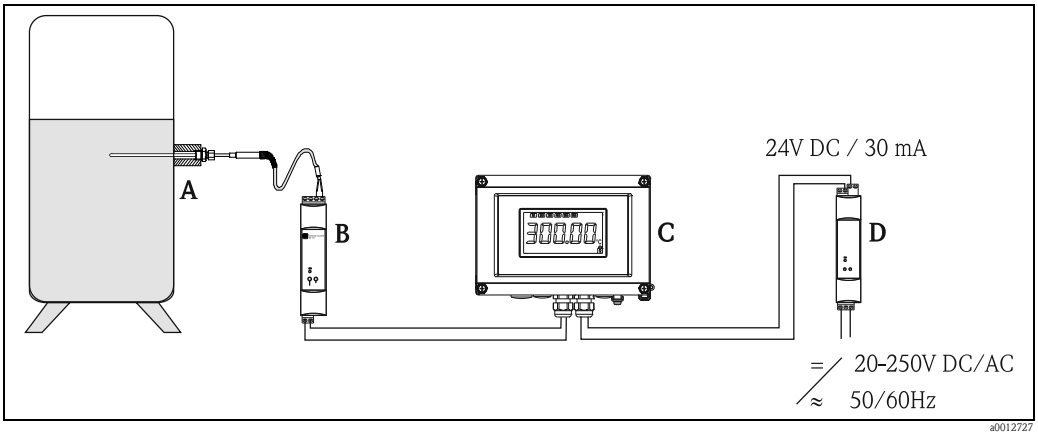

Example of an application

A Built-in RTD thermometer TST310

B Temperature transmitter iTEMP® DIN rail TMT12x. The two-wire transmitter detects the measurement signals of the resistance thermometer in a 2, 3, or 4-wire connection and converts them into an analog 4 to 20 mA measurement signal.

C RIA16 field display unit
- The display unit measures the analog signal from the transmitter and shows this on the display. The LC display shows the current measured value in digital form and as a bar graph indicating a limit value violation. The display unit is looped into the 4 to 20 mA circuit and gets the required energy from there. More information on this can be found in the Technical Information (see "Documentation").

D Active barrier RN221N
- The RN221N active barrier (24 V DC, 30 mA) has an galvanically isolated output for supplying voltage to loop powered transmitters. The universal power supply works with an input supply voltage of 20 to 250 V DC/AC, 50/ 60 Hz, which means that it can be used in all international power grids. More information on this can be found in the Technical Information (see "Documentation").

Equipment architecture

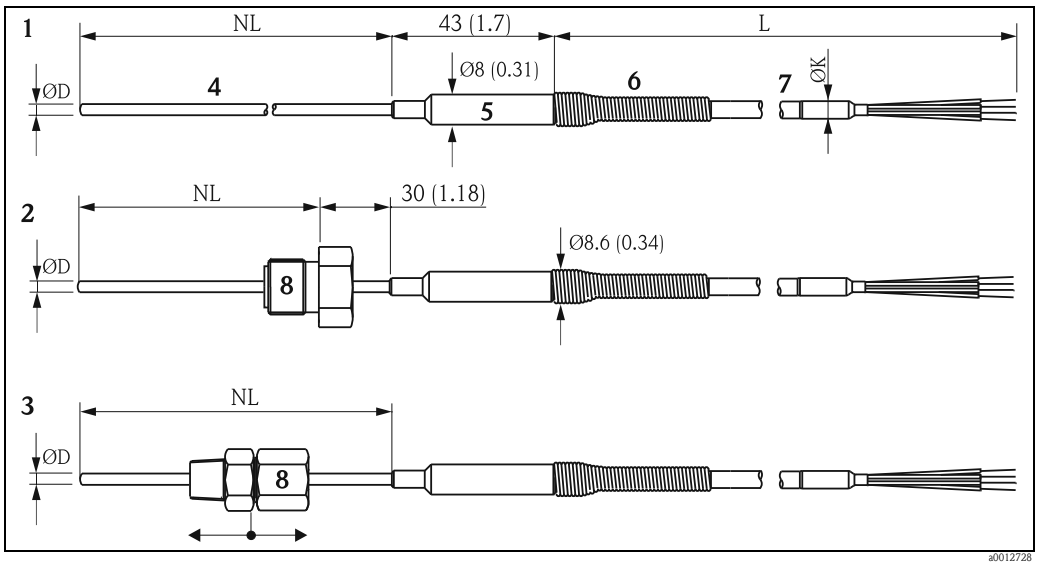

Thermometer design, dimensions in mm (in)

1 Without process connection
2 With brazed process connection
3 With adjustable compression fitting
4 Cable sensor with ØD = 3 mm (0.12 in) or 6 mm (0.24 in)
5 Transition sleeve
6 Anti-kink spring, 50 mm (1.97 in)
7 Connecting cable with variable cable diameter ØK, see Table 'Connecting cable'
8 Process connection versions
L Connecting cable length
NL Insertion length

The resistance thermometers of the Omnigrad T TST310 series are designed as cable sensors. The actual RTD sensor element is fitted in the sensor tip and mechanically protected. In principle there are bendable and non-bendable versions of the cable sensor; for details, see → 9. The cable sensors generally consist of a stainless steel tube in which the leads of the sensor element are routed and electrically insulated. Only the bendable version uses mineral-insulated sheathed cables instead. The corresponding connecting cable is fastened to the sensor using a transition sleeve.
The thermometer can be installed using either a movable compression fitting or a process connection firmly brazed onto the thermometer. In addition, versions can be delivered for insertion without a special process connection. For detailed process connection versions, see → 7.

Connection cable

Cable insulation; sheathing; leads	Option	Cable diameter ØK in mm (in)
PVC; PVC; 4-wire	A	4.8 (0.19)
PTFE; Silicone; 4-wire	B	4.6 (0.18)
PTFE; PTFE; 4-wire	C	4.5 (0.178)
PTFE; Silicone; 2x3-wire	D	5.2 (0.2)
PTFE; Silicone; 4-wire	E	4.0 (0.16)

Measurement range

- -50 to +400 °C (-58 to +752 °F), bendable version, mineral-insulated sheathed cable
- -50 to +250 °C (-58 to +482 °F) non-bendable version, insulated sensor wires in the stainless steel tube

Performance characteristics

Operating conditions

Ambient temperature

The permitted ambient temperature is dependent on the material used for the electrical connecting cable and the cable sheath insulation:

Material Connection cable / sheath insulation	Max. temperature in °C (°F)
PVC / PVC	80 °C (176 °F)
PTFE / silicone	180 °C (356 °F)
PTFE / PTFE	200 °C (392 °F)

Process pressure

Max. process pressure (static) ≤ 75 bar (1088 psi).

Note!
For the maximum permitted process pressures for the respective process connections, refer to the Chapter "Process connection" → 🗎 7.

Permitted flow velocity depending on the immersion length

The highest flow velocity tolerated by the thermometer diminishes with increasing immersion length exposed to the stream of the fluid. In addition it is dependent on the diameter of the thermometer tip, on the kind of measuring medium, on the process temperature and on the process pressure. The following figures exemplify the maximum permitted flow velocities in water and superheated steam at a process pressure of 1 MPa (10 bar = 145 PSI).

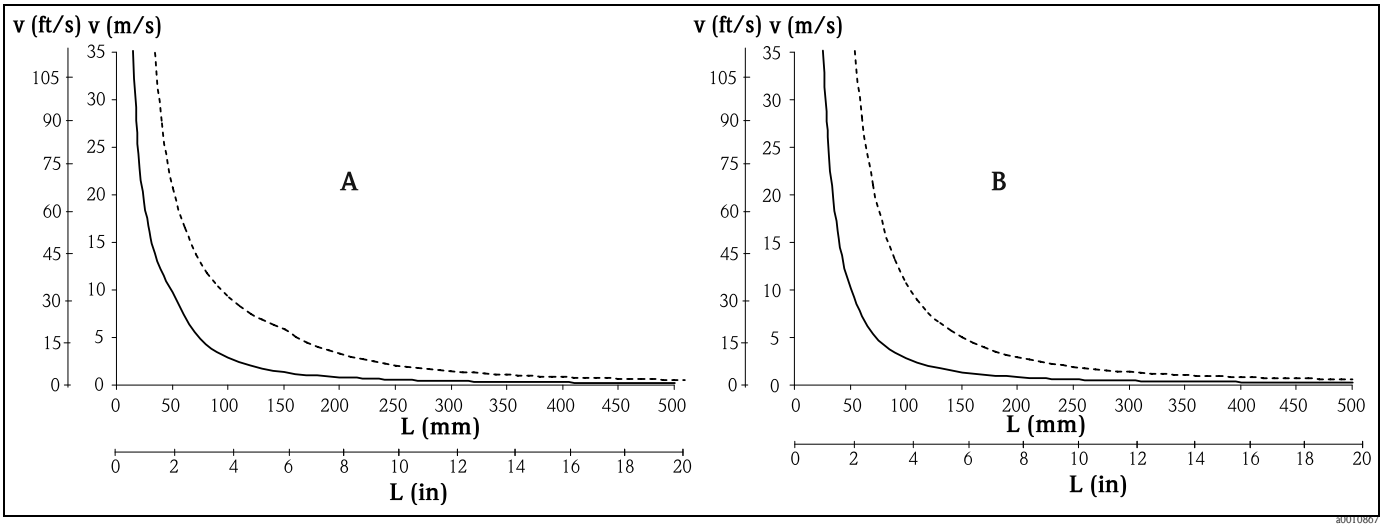

Permitted flow velocity
- Insert diameter 3 mm (0.12 in) ————
- Insert diameter 6 mm (0.24 in) - - - - - -

A	Medium water at T = 50 °C (122 °F)	L	Immersion length
B	Medium superheated steam at T = 400 °C (752 °F)	v	Flow velocity

Shock and vibration resistance

3g / 10 to 500 Hz as per IEC 60751 (RTD-Thermometer)

Degree of protection

IP65

Accuracy RTD corresponding to IEC 60751

Class	max. Tolerances (°C)	Temperature range	Characteristics
RTD max. error type TF - range: -50 to +400 °C			
Cl. A	± (0.15 + 0.002 · |t|[1])	-50 °C to +250 °C	
Cl. AA, former 1/3 Cl. B	± (0.1 + 0.0017 · |t|[1])	0 °C to +150 °C	
Cl. B	± (0.3 + 0.005 · |t|[1])	-50 °C to +400 °C	
RTD max. error type WW - range: -200 to +600 °C			
Cl. A	± (0.15 + 0.002 · |t|[1])	-200 °C to +600 °C	
Cl. AA, former 1/3 Cl. B	± (0.1 + 0.0017 · |t|[1])	0 °C to +250 °C	
Cl. B	± (0.3 + 0.005 · |t|[1])	-200 °C to +600 °C	

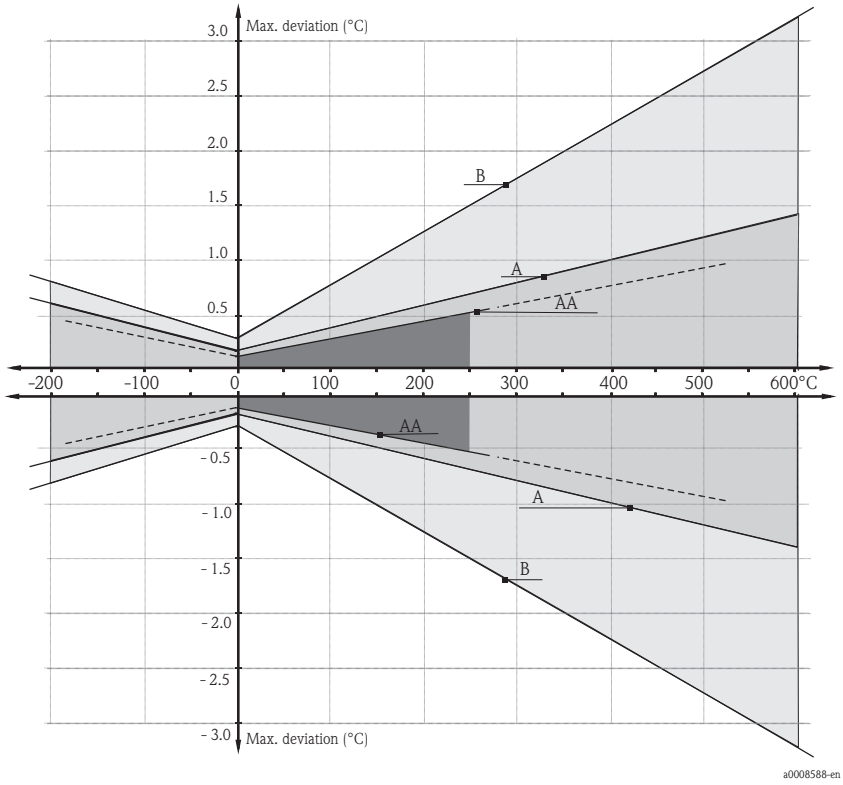

1) |t| = absolute value °C

Note!
For measurement errors in °F, calculate using equations above in °C, then multiply the outcome by 1.8.

Response time Tests in water at 0.4 m/s (1.3 ft/s), according to IEC 60751; 10 K temperature step changes. Sensor Pt100, TF/WW:

Cable probe diameter	Response time	
Mineral-insulated cable		
6 mm (0.24 in)	t_{50} t_{90}	3.5 s 8 s
3 mm (0.12 in)	t_{50} t_{90}	2 s 5 s
Insulated sensor wires		
6 mm (0.24 in)	t_{50} t_{90}	9 s 28 s
3 mm (0.12 in)	t_{50} t_{90}	6 s 18 s

Note!
Response time for the cable probe without transmitter.

Insulation resistance Insulation resistance (measured with a voltage of 100 V DC) ≥100 MΩ at ambient temperature.

Self heating

RTD elements are passive resistances that are measured using an external current. This measurement current causes a self heating in the RTD element itself which in turn creates an additional measurement error. In addition to the measurement current the size of the measurement error is also affected by the temperature conductivity and flow velocity of the process. This self heating error is negligible when an Endress+Hauser iTEMP® temperature transmitter (very small measurement current) is connected.

Calibration specifications

Endress+Hauser provides comparison temperature calibration from -80 to +600 °C (-110 °F to 1112 °F) based on the International Temperature Scale (ITS90). Calibrations are traceable to national and international standards. The calibration report is referenced to the serial number of the thermometer.

Cable probe: Ø6 mm (0.24 in) and Ø3 mm (0.12 in)	Minimum insertion length in mm (in)
Temperature range	
-80 °C to -40 °C (-110 °F to -40 °F)	200 (7.87)
-40 °C to 0 °C (-40 °F to 32 °F)	160 (6.3)
0 °C to 250 °C (32 °F to 480 °F)	120 (4.72)
250 °C to 550 °C (480 °F to 1020 °F)	300 (11.81)

Material

Cable probe and process connection.
The temperatures for continuous operation specified in the following table are only intended as reference values for use of the various materials in air and without any significant compressive load. The maximum operation temperatures are reduced considerably in some cases where abnormal conditions such as high mechanical load occur or in aggressive media. Please observe also the measuring range of the temperature sensor (→ 3).

Material name	Short form	Recommended max. temperature for continuous use in air	Properties
AISI 316L/ 1.4404	X2CrNiMo17-12-2	650 °C (1200 °F)	■ Austenitic, stainless steel ■ High corrosion resistance in general ■ Particularly high corrosion resistance in chlorine-based and acidic, non-oxidizing atmospheres through the addition of molybdenum (e.g. phosphoric and sulfuric acids, acetic and tartaric acids with a low concentration) ■ Increased resistance to intergranular corrosion and pitting
AISI 316Ti/ 1.4571	X6CrNiMoTi17-12-2	700 °C (1292 °F)	■ Properties comparable to AISI316L ■ Addition of titanium means increased resistance to intergranular corrosion even after welding ■ Broad range of uses in the chemical, petrochemical and oil industries as well as in coal chemistry ■ Can only be polished to a limited extent, titanium streaks can form

Connecting cable insulation

Designation	Features
PVC (polyvinyl chloride)	■ Very good acid resistance ■ High hardness, resistance to inorganic chemicals, particularly acids and alkalis ■ Low impact strength and low temperature stability
Silicone	■ Flame-retardant, flame-resistant ■ Permanently elastic at high and low temperatures ■ Aging and weather-resistant ■ Ozone and UV-resistant ■ Oil, solvent, and fuel-resistant (fluorosilicones), water-repellent ■ Flue gas-resistant
PTFE	■ Resistance to nearly all chemicals ■ Good mechanical loading capacity over a broad temperature range ■ Working temperature up to +200 °C (+392 °F)

Weight

≥ 100 g (3.53 oz), depending on version, e. g. 150 g (5.3 oz) for version NL = 100 mm (3.93 in) and brazed thread process connection G½".

Components

Process connection

The process connection is the connection between the process and the thermometer. This connection is realized by a brazed connection thread with fixed position or a adjustable compression fitting. When using a compression fitting the thermometer is pushed through a gland and fixed using a compression ferrule.

- **Brazed process connection thread**
  Maximum process pressure: 75 bar (1088 psi) at 20 °C (68 °F).
- **SS316-compression ferrule**
  Can only be used once, the compression fitting cannot be repositioned on the protection tube after loosening. Fully adjustable insertion length on initial installation. Maximum process pressure: 40 bar at 20 °C (580 psi at 68 °F).
- **PTFE-compression ferrule**
  Can be reused, after loosening the fitting can be moved up and down the protection tube. With fully adjustable insertion length. Maximum process temperature: 180 °C (356 °F), maximum process pressure: 5 bar at 20 °C (73 psi at 68 °F).

Process connection

Adjustable compression fitting with connection thread	Brazed process connection

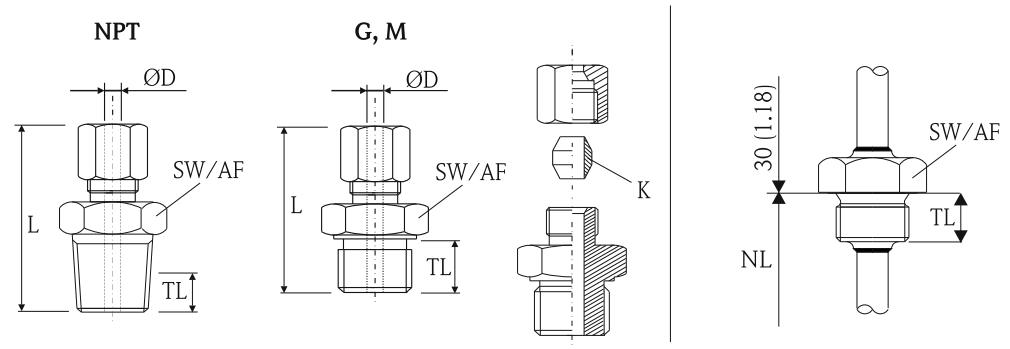

Dimensions in mm (in). NL = Insertion length

Type	Connection thread	L in mm (in)	TL in mm (in)	Width across flats SW/AF	Material compression ferrule K
Compression fitting	G1/8"	35 (1.38)	10 (0.4)	14	SS 316 / PTFE
	G¼"	40 (1.57)		19	SS 316 / PTFE
	G½"	47 (1.85)	15 (0.6)	27	SS 316 / PTFE
	1/8" NPT	35 (1.38)	4 (0.16)	12	SS 316
	¼" NPT	40 (1.57)	6 (0.24)	14	
	½" NPT	50 (1.97)	8 (0.32)	22	
	M10x1	35 (1.38)	10 (0.4)	14	PTFE
	M8x1			12	
Process connection, brazed	G¼"	–	12 (0.47)	17	–
	G½"		15 (0.6)	27	
	M10x1		10 (0.4)	14	
	M8x1			12	

Spare parts

Spare part set TA50 compression fitting	Material-No.
∅ 6.1 mm (0.24 in); G¼", G3/8", G½", G¾", ¼" NPT, ½" NPT, ¾" NPT; material ferrule PTFE (10 pieces)	60011600
∅ 3 mm (0.12 in); G1/8", G¼"; material ferrule PTFE (10 pieces)	60011598
∅ 6.1 mm (0.24 in); G¼", G3/8", G½", G¾", ¼" NPT, ½" NPT, ¾" NPT; material ferrule SS 316 (10 pieces)	60011599
∅ 3 mm (0.12 in); G1/8", G¼"; material ferrule SS 316 (10 pieces)	60011575

Wiring

Wiring diagrams

The thermometer is wired with the flying leads of the connecting cable. The thermometer can be connected to a separate temperature transmitter, for example.
Core cross-section ≤ 0.382 mm^2 (22 AWG) with end sleeves, length = 5 mm (0.2 in).

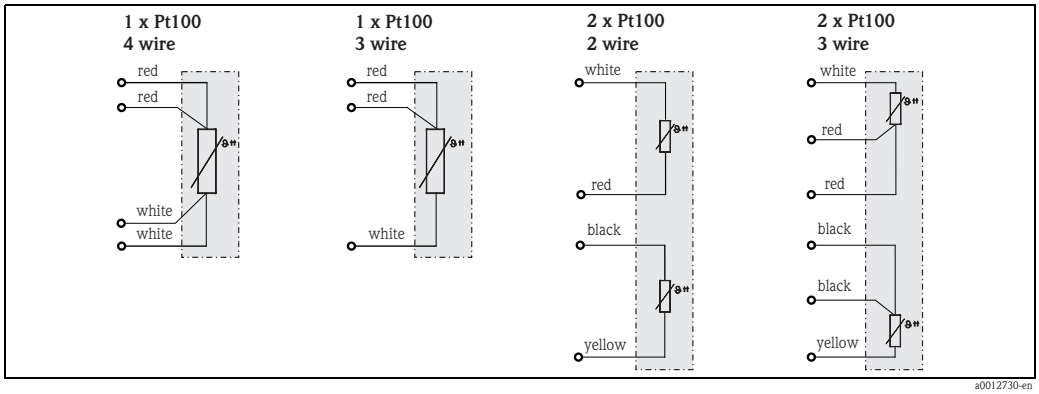

Wiring diagram flying leads

Installation conditions

Orientation

No restrictions.

Installation instructions

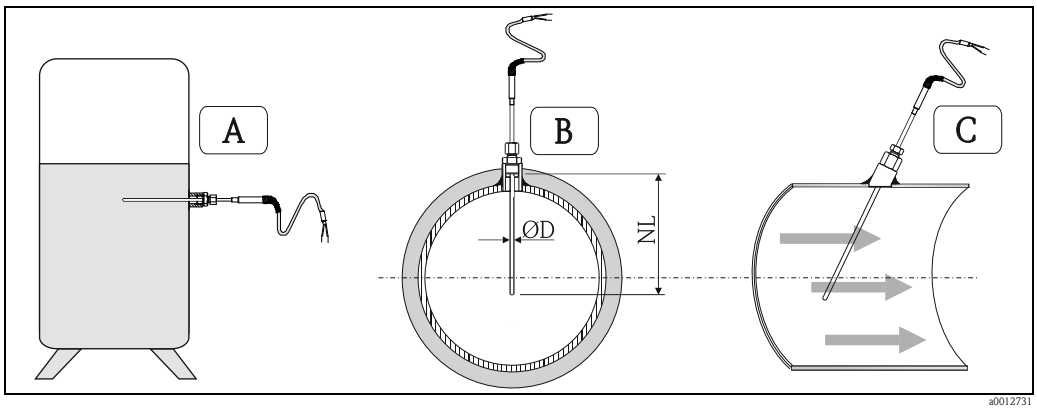

Installation examples

A: Installation in a tank.
B: For pipes with a small cross-section, the sensor tip must reach to the piping axis or a little farther (=NL).
C: Tilted orientation.

The insertion length of the thermometer can influence the accuracy. If the insertion length is insufficient, heat dissipation via the process connection and the container wall can cause measurement errors. For installation

in a pipe, therefore, the recommended insertion length ideally corresponds to half of the pipe diameter (see Figure 'Installation examples', Pos. B).

- Installation possibilities: Pipes, tanks or other plant components
- The insertion length for the bendable version should correspond to at least about ten times the cable sensor diameter (ØD); for the non-bendable version with insulated sensor wires it should correspond to at least about thirty times the cable sensor diameter.
  Example: Diameter 3 mm (0.12 in) x 30 = 90 mm (3.54 in). A standard insertion length of > 60 mm (2.36 in) is recommended for the bendable version and > 180 mm (7.1 in) for the non-bendable version.
- ATEX certification: Observe the installation instructions in the Ex documentation!

Note!
For pipes with small diameters, sometimes only small thermometer insertion lengths are possible. Improvements can be achieved by inserting the thermometer at a tilted installation (see Figure 'Installation examples', Pos. C). To determine the necessary insertion lengths, the parameters of the thermometer and of the process to be measured must always be taken into consideration (e.g. flow velocity, process pressure). Installation of the thermometer in a thermowell is not recommended.

Bendable cable sensor
Cable sensors with a MgO sheathed cable are bendable, taking into account the minimum dimensions specified in the table. Bending of cable sensors with insulated sensor wires is not permitted.

Bending radius R	
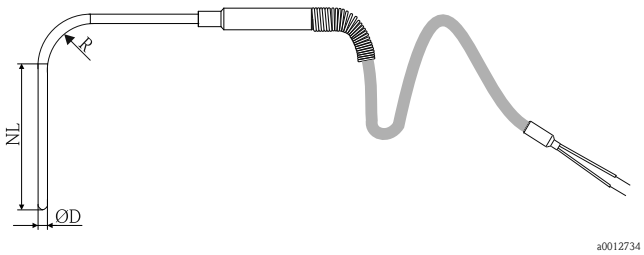	- R > 15 mm (0.6 in) for ØD = 3 mm (0.12 in), NL ≥ 25 mm (1 in) - R > 30 mm (1.2 in) for ØD = 6 mm (0.24 in), NL ≥ 65 mm (2.56 in)

Certificates and approvals

CE Mark

The device meets the legal requirements of the EC directives if applicable. Endress+Hauser confirms that the device has been successfully tested by applying the CE mark.

Hazardous area approvals

For further details on the available Ex versions (ATEX, CSA, FM, etc.), please contact your nearest Endress+Hauser sales organization. All relevant data for hazardous areas can be found in separate Ex documentation. If required, please request copies.

Other standards and guidelines

- IEC 60529:
  Degrees of protection by housing (IP-Code).
- IEC 61010-1:
  Safety requirements for electrical measurement, control and laboratory instrumentation.
- IEC 60751:
  Industrial platinum resistance thermometer
- IEC 61326-1:
  Electromagnetic compatibility (EMC requirements)

PED approval

The thermometer complies with paragraph 3.3 of the Pressure Equipment Directive (97/23/CE) and is not marked separately.

Test report and calibration

The "Factory calibration" is carried out according to an internal procedure in a laboratory of Endress+Hauser accredited by the European Accreditation Organization (EA) to ISO/IEC 17025. A calibration which is performed according to EA guidelines (SIT or DKD calibration) may be requested separately. The entire thermometer – from the process connection to the tip of the thermometer – is calibrated.

Ordering information

Product structure

This information provides an overview of the order options available. The information is not exhaustive, however, and may not be fully up to date. **More detailed** information is available from your local Endress+Hauser representative.

RTD Thermometer TST310

010	**Insert Diameter; Calibration:**	
	A	3 mm
	B	6 mm
	Y	Special version, TSP-No. to be specified
	1	3 mm, 1x Pt100; calibration 0, 100 °C
	2	6 mm, 1x Pt100; calibration 0, 100 °C
	3	3 mm, 2x Pt100; calibration 0, 100 °C
	4	6 mm, 2x Pt100; calibration 0, 100 °C
020	**Insertion Length NL:**	
	1	100 mm
	2	150 mm
	3	250 mm
	4	300 mm
	5	350 mm
	7	500 mm
	8	..... mm
	9	..... mm, as specified
030	**Insert Material:**	
	A	-50/+400 °C, MgO; 316L
	B	-50/+250 °C, insulated wires, 316Ti, max. NL=500 mm
	Y	Special version, TSP-No. to be specified
040	**RTD Class; Wiring:**	
	1A3	1x Pt100 A; 3-wire
	1A4	1x Pt100 A; 4-wire
	1B3	1x Pt100 B; 3-wire
	1B4	1x Pt100 B; 4-wire
	1C3	1x Pt100 AA; 3-wire
	1C4	1x Pt100 AA; 4-wire
	2A3	2x Pt100 A; 3-wire
	2B2	2x Pt100 B; 2-wire
	2B3	2x Pt100 B; 3-wire
	2C3	2x Pt100 1/3DIN B; 3-wire
	9Y9	Special version, TSP-No. to be specified
050	**Process connection:**	
	A	Not needed
	B	Thread G¼", 316 brazed
	C	Compression fitting G¼", 316; ferrule PTFE
	D	Compression fitting G¼", 316; ferrule 316
	E	Thread G½", 316 brazed
	F	Compression fitting G½", 316; ferrule PTFE
	G	Compression fitting G½", 316; ferrule 316
	J	Compression fitting ½" NPT, 316; ferrule 316
	K	Compression fitting 1/8" NPT, 316; ferrule 316
	L	Compression fitting ¼" NPT, 316; ferrule 316
	R	Thread M10x1; 316 brazed
	S	Compression fitting M10x1, 316; ferrule PTFE
	U	Compression fitting M8x1, 316; ferrule PTFE
	V	Thread M8x1, 316 brazed
	X	Compression fitting G1/8", 316; ferrule PTFE
	Y	Special version, TSP-No. to be specified
	Z	Compression fitting G1/8", 316; ferrule 316
060	**Length Extension L:**	
	1	1000 mm
	2	2000 mm
	3	3500 mm
	4	4000 mm
	8	..... mm
	9	..... mm, as specified

070							**Wire; Sheath; Application:**					
							A	PVC; PVC; 4-wire, max. 80 °C				
							B	PTFE; Silicone; 4-wire, max. 180 °C				
							C	PTFE; PTFE; 4-wire. max. 200 °C				
							D	PTFE; Silicone; 2x3-wire, max. 180 °C				
							E	PTFE; Silicone rubber; 4-wire, max. 150 °C, blue				
							Y	Special version, TSP-No. to be specified				
080								**Connection Cable:**				
								1	Flying leads			
								9	Special version, TSP-No. to be specified			
090									**Additional Option:**			
									A	Not needed		
									E	ATEX II1/2D Ex iaD 21, II1G Ex ia IIC		
									F	ATEX II1D Ex iaD 20, II1G Ex ia IIC		
									G	ATEX II 1 G Ex ia IIC		
									H	ATEX II 3 GD EEx nA II		
									I	NEPSI Ex is IIC T6		
									P	IECEx Ga Ex ia IIC T6		
									Y	Special version, TSP-No. to be specified		
995										**Marking:**		
										TAG	Tagging (TAG)	
TST310-												← **Order code (complete)**

Documentation

Hazardous area supplementary documentation:
- RTD/TC Thermometer Omnigrad TRxx, TCxx, TSTxxx, TxCxxx ATEX II3GD (XA044r/09/a3)
- RTD/TC inserts and cable thermometers Omniset TPR100, TPC100, TST310, TSC310 ATEX II1GD or II 1/2GD (XA087r/09/a3)

Application example

Technical Information:
- Temperature transmitter:
  - iTEMP® HART® DIN rail TMT122 (TI090r/09/en)
  - iTEMP® PCP DIN rail TMT121 (TI087r/09/en)
- Field display RIA16 (TI144r/09/en)
- Active barrier with power supply RN221N (TI073r/09/en)

Instruments International

Endress+Hauser
Instruments International AG
Kaegenstrasse 2
4153 Reinach
Switzerland

Tel.+41 61 715 81 00
Fax+41 61 715 25 00
www.endress.com
info@ii.endress.com

Endress+Hauser
People for Process Automation

TI00085T/09/en/01.11
71108017
FM 9.0