Rossi
Habasit Group

Gear reducers and gearmotors

ATEX Operating Instructions

UTD.123.04-2018.00_EN

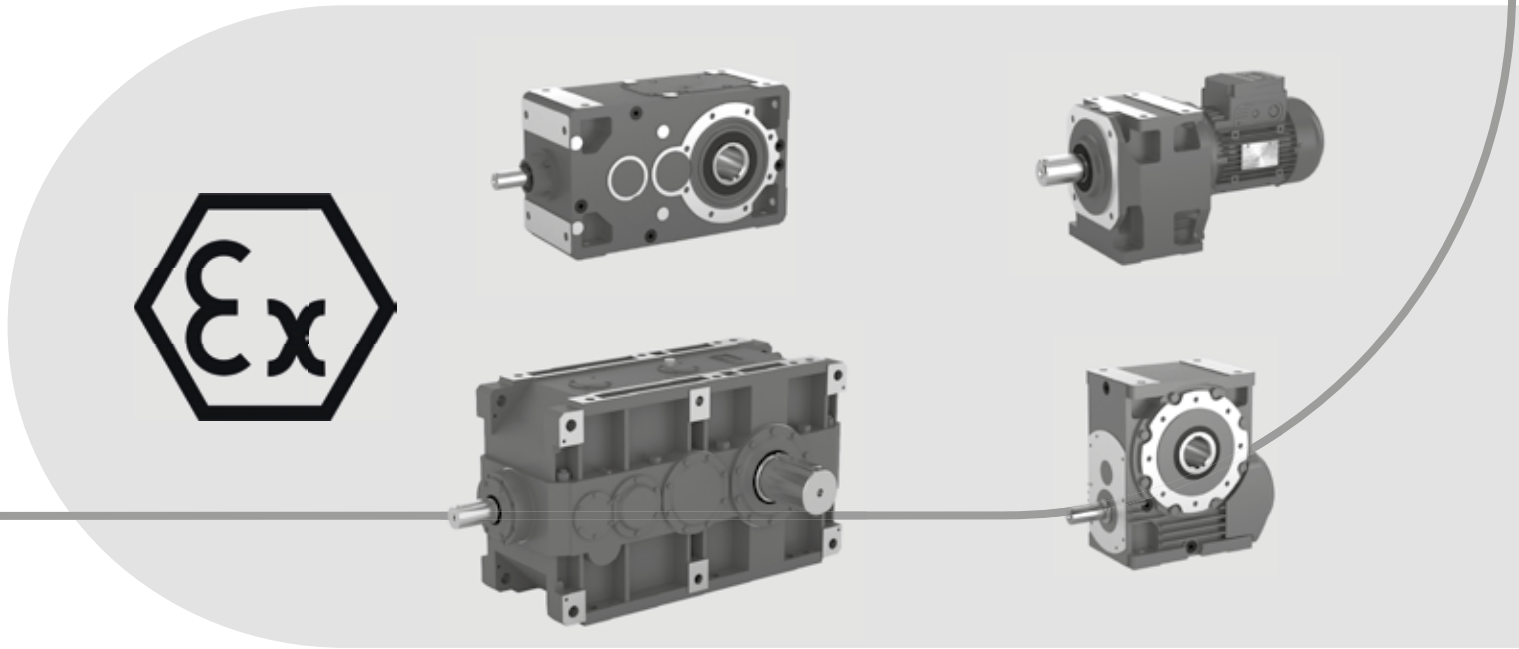

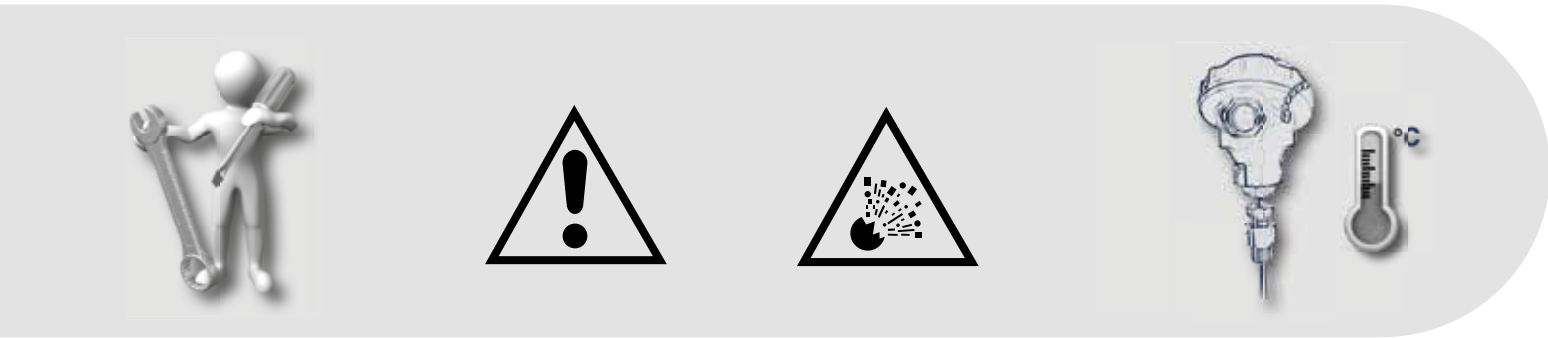

Contents

1 - General safety information 4
1.1 - Recycling 4
1.2 - Safety....4
2 - Application conditions and use limits....5
3 - How supplied....6
3.1 - Receipt....6
3.2 - Nameplate 6
3.3 - Lubricant....7
3.4 - Painting....7
3.5 - Protections and packing 7
4 – Lifting, handling and storing 8
4.1 - Lifting and handling....8
4.2 - Storing 9
5 - Installation....10
5.1 - General 10
5.2 - Tightening torques for fastening bolts (feet, flange, accessories) and for plugs 12
5.3 - Flange mounting....12
5.4 - Foot mounting 13
5.5 - Shaft mounting....14
5.6 - Hollow low speed shaft mounting....16
5.7 - Gear reducer assembly and disassembly 16
5.8 - Gear reducer axial fastening....17
5.9 - Gear reducer keying with key and locking rings or bush 17
5.10 - Mounting of hollow low speed shaft with shrink disc....18
5.11 - Fitting of components to low and high speed shaft ends 20
5.12 - Backstop device 21
5.13 - Verification of service factor ***f***s required by the application 22
5.14 - Thermal power verification ***P***t [kW] of gear reducer 24
6 - Lubrication....28
6.1 - General 28
6.2 - Lubrication table....29
6.3 - Lubrication of extruder support (helical and bevel helical, sizes 100 ... 4501)....30
7 - Motor assembly and disassembly 31
7.1 - General 31
7.2 - Gearmotors with motor keyed onto hollow high speed shaft of gear reducer 31
7.3 - Gearmotors with helical pinion keyed directly on motor shaft end....32
8 - Cooling systems 33
8.1 - Fan cooling 33
8.2 - Cooling by coil (G series, H (H02)) or with internal exchanger (G series) 33
9 - Accessories 35
9.1 - Heater....35
9.2 - Oil (or bearing) temperature probe with terminal box and amperometric transducer 4 ÷ 20 mA 36
9.3 - Oil level switch with float....37
9.4 - TCA 2BA thermostat....38
9.5 - Flow gauge BFS-20 39
10 - Commissionning....40
10.1 - General 40
10.2 - Running-in 40
10.3 - Measurement of surface temperature....40

11 - Maintenance 41
11.1 - General 41
11.2 - Oil change 42
11.3 - Coil and internal heat exchanger 42
11.4 - Seal rings 42
11.5 - Bearings 42
11.6 - Metal filler plug with filter and valve 43
11.7 - Sound levels 43
11.8 - Gear reducer troubles: causes and corrective actions 44
12 - ATEX checks and verifications 45
Table of main installation checks and operations 45
12.2 - Table of commissioning checks and operations[1)] 46
12.3 - Table of inspections[1)] to be made during the normal operation (to be made after checks listed on table 12.2) 47
13 - A (A04) Series - Mounting positions, oil quantity, position of plugs 48
13.1 - Oil (quantity) levels for worm GEAR REDUCERS and GEARMOTORS sizes 32 ... 81 (A (A04) series), supplied FILLED with OIL 48
13.2 - Mounting positions and plug positions for worm GEAR REDUCERS and GEARMOTORS sizes 100 ... 250 (A, A04 series), supplied WITHOUT OIL 49
14 - E (E04) series - Mounting positions, oil quantity and position of plugs 51
14.1 - Oil level (quantity) for coaxial GEAR REDUCERS and GEARMOTORS sizes 50 ... 81 (E (E04) series) supplied FILLED WITH OIL 51
14.2 - Mounting positions and plug positions for coaxial GEAR REDUCERS and GEARMOTORS sizes 100 ... 180 (E (E04) series), supplied WITHOUT OIL 52
15 - G series - Mounting positions, oil quantity and position of plugs 53
15.1 - Oil levels (quantity) for helical and bevel helical GEAR REDUCERS and GEARMOTORS sizes 40 ... 81 (G series) supplied FILLED with OIL 53
15.2 - Mounting positions and plug positions for helical GEAR REDUCERS and GEARMOTORS sizes 100 ... 360 (G series), supplied WITHOUT OIL 55
16 - H (H02) Series - Mounting positions, oil quantity and position of plugs 61
Index of revisions 70

Operating instructions gear reducers and gearmotors complying with ATEX 2014/34/UE

A (**A04**) Series	Worm gear reducers and gearmotors
E (**E04**) Series	Coaxial gear reducers and gearmotors
G Series	Helical and bevel helical gear reducers and gearmotors (sizes 40 ... 360)
H (**H02**) Series	Helical and bevel helical gear reducers (sizes 4000 (400) ... 6301 (631))

1 - General safety information

This chapter provides information about handling, installation and maintenance of the gear reducers and gearmotors applied in potentially explosive environments (ATEX).

All the people handling with these activities must carefully read all the following instructions and apply them rigorously.

The information and the data contained in this document correspond to the technical level reached at the moment the handbook is printed. Rossi reserves the right to introduce, without notice, the necessary changes to improve efficiency and safety of its products.

1.1 - Recycling

Observe the established legislation concerning waste treatment and recycling of exhaust material:
– housings, gears, shafts and bearings of gear reducer must be handled as scrap iron materials, along with all other steel components;
– worm gears have a bronze crown and must be handled as bronze waste material, along with other bronze components;
– all other non-metallic components (O-rings, caps, etc.) must be handled as required by established legislation;
– exhausted oils must be collected and handled as required by established legislation.

1.2 - Safety

The paragraphs marked with symbols ⚠ Ex shown below contain dispositions to be strictly respected in order to assure **personal safety** and to avoid any **heavy damages** to the machine or to the system (e.g.: works on live parts, on lifting machines, etc.).

Electric or mechanical **danger**, e.g.:
– electric voltage;
– temperature higher than 50 °C;
– presence of rotating pieces during the running;
– suspended loads (lifting and handling);
– eventual high sound level (> 85 dB(A));

Safety instructions for the use in areas classified according to ATEX 99/92/EC.

IMPORTANT: gear reducers and gearmotors supplied by Rossi are **components** and must be incorporated into machinery and **should not be commissioned before the machinery in which the components have been incorporated conforms to:**

– Machinery directive 2006/42/EC and subsequent updatings; in particular, possible safety guards for shaft ends not being used and for eventually accessible fan cover passages (or other) are the Buyer's responsibility;
– «Electromagnetic compatibility (EMC)» 2014/30/EU and subsequent updatings.

Attention! It is recommended to pay attention to all instructions of present handbook, all existing safety laws and standards concerning correct installation.

Whenever personal injury or property damage may occur, foresee adequate supplementary protection devices against:

– release or breakage of fastening screws;
– rotation or unthreading of the gear reducer from shaft end of driven machine following to accidental breakage of the reaction arrangement;
– the accidental breakage of shaft end of driven machine.

If deviations from normal operation occur (temperature increase, unusual noise, etc.) immediately switch off the machine.

Installation

An incorrect installation, an improper use, the removing or disconnection of protection devices, the lack of inspections and maintenance, improper connections may cause severe personal injury or property damage. Therefore the component must be moved, installed, commissioned, handled, controlled, serviced and repaired **exclusively by responsible qualified personnel**.

The skilled personnel must be **specifically instructed** and have the necessary experience to **recognize any risks** connected with present products avoiding any possible emergencies.

Gear reducers and gearmotors of present handbook are normally suitable for installations in **industrial areas**: additional protection measures, if necessary, must be adopted and assured by the personnel responsible for the installation.

Attention! Components in non-standard design or with special executions or with constructive variations may differ in the details from the ones described here following and may require additional information.

Attention! For the installation use and maintenance of the **electric motor** (standard, brake or non-standard motor) or of the possible motor-variator and/or the electric supply device (frequency converter, soft-start, etc.), and/or any optional electric devices (e.g.: independent cooling unit, etc.), consult the specific attached documentation. If necessary, require it.

Maintenance

When operating on gear reducer or on components connected to it the **machine** must be **at rest**: disconnect motor (including auxiliary equipments) from power supply, gear reducer from load, be sure that safety systems are on against any accidental starting and, if necessary, pre-arrange mechanical locking devices (to be removed before commissioning).

Attention! During the running the gear reducers could have **hot surfaces**; Always wait that the gear reducer or the gearmotor to cool before carrying out any operations.

ATEX requirements

For whatever operation (assembling, disassembling, cleanness, maintenance) use tools and procedures which will not cause explosion (e.g.: sparks). When using electric equipment (portable working lights, vacuum cleaner, etc.) be sure that they are certified according to ATEX directive and suitable to the area.

Whenever the gear reducer/gearmotor is disassembled, moved and mounted to another installation, or modified, e.g. with the application of a different motor (see table 2.1 and table 5.1), **check whether it is compatible with the new installation and classification of the area, as well as its suitability for the envisaged service as indicated by the service specifications** (*fs*, radial loads, ch. 5.13), thermal power *P*t (ch. 5.14), radial loads, etc.).

When a bearing lubrication pump is present ("P" code stated on name plate, see DESIGN) it is necessary **to avoid** input speeds lower than n_1 = 355 min^{-1}, consult us if need may be.

This handbook «ATEX operating instructions» and its enclosures, if any, must be kept close to the gear reducer or gearmotor in order to be easily consulted.

Further technical documentation (e.g. catalogs) can be downloaded from our website www.rossi-group.com or can be directly required to Rossi. For any clarification and/or additional information consult Rossi and specify all name plate data.

2 - Application conditions and use limits

The gear reducers are designed for a use according to nameplate data, in industrial applications, in absence of vibrations (for the admissible vibration speed see ch. 5.1), in absence of nuclear radiations and magnetic fields, with ambient temperature[1)] -20 ÷ +40 °C, air speed 1,25 m/s, maximum altitude 1 000 m, max relative humidity 80 % and can be used in zones subject to the danger of explosion classified as follows, according to ATEX 99/92/EC:

- for zone 1, 2, 21, 22 gear reducer, gearmotor (without motor) design: **II 2GD c, b, k**;
- for zone 2, 22 gear reducer, gearmotor (without motor) design: **II 3GD c, b, k**;
- for zone 1, 2 gear reducer, gearmotor (without motor) design: **II 2G c, b, k**.

In case of different ambient conditions, consult Rossi.

The specific mark relevant to explosion protection is to be completed with following data:
- **maximum surface temperature and temperature class** or
- **maximum surface temperature** or
- symbol "X" followed by the identification code of technical document to be referred to concerning running conditions.

Running conditions must not exceed the limits stated on the name plate and those of the documentation enclosed, if any.

1) For ambient temperature greater than +40 °C or less than 0 °C, consult Rossi.

3 - How supplied

3.1 - Receipt

At receipt verify that the unit corresponds to the one ordered and has not been damaged during the transport, in case of damages, report them immediately to the courier.

Do not commission gear reducers and gearmotors that are even slightly damaged or not suitable for the intended use: in this case consult Rossi.

Report any non-compliance to Rossi.

3.2 - Nameplate

Every gear reducer is provided with a name plate in anodised aluminium containing main technical information relevant to operating and constructive specifications and defining, according to contractual agreements (see fig. below), the application limits; the name plate must not be removed and must be kept integral and readable. All name plate data must be specified on eventual spare part orders.

Attention! For the mass stated on name plate remind that:

– it does not consider the lubricant mass;
– it is the maximum one for the gear reducer size, therefore the actual one can be lower as it depends from train of gears and transmission ratio;
– for the gearmotors the mass is always the same of gearmotor without motor, therefore consider also the mass of motor stated on relevant name plate in order to know the total mass.

In view of above mentioned points, if it is necessary to know the exact mass, consult Rossi.

Designation				Series
Machine	Train of gears	Size	Design	
R, MR	V, IV, 2IV	32 ... 250	UO ...	**A (A04) - worm**
R, MR	2I, 3I	50 ... 180	UC ...	**E (E04) - coaxial**
R, MR	I, 2I, 3I, 4I	40 ... 360	UP ...	**G - helical**
R, MR	CI, ICI, C2I, C3I	40 ... 360	UO ...	**G - bevel helical**
R	2I, 3I, 4I	4000 (400) ... 6301 (631)	UP ...	**H (H02) - helical**
R	CI, C2I, C3I	4000 (400) ... 6301 (631)	UO ...	**H (H02) - bevel helical**

Key

(1) Manufacturing month and year
(2) Gear reducer or gearmotor designation (see table).
(3) ATEX codes and non-standard designs or accessories; the letter "P" states the presence of bearing lubrication pump;
(4) Ø motor shaft Ø flange (gearmotor).
(5) if marked with X install the necessary probes and/or thermostats: mounting position as per SPT scheme attached to these ATEX operating instructions; connections see ch. 9.
(6) R Code.
(7) Serial number (if present).
(8) Mounting position; the eventual indication «spec.» means that it concerns a gear reducer with plugs for special (inclined) mounting position.
(9) Service factor $fs = P_{N1} / P_{motor}$, stated only when a complete gearmotor with motor is supplied.
(10) Transmission ratio.
(11) Gear reducer or gearmotor mass (if applicable).
(12) Nominal power produced by gear reducer referred to high speed shaft and to n_1 = 1 400 min^{-1}.
(13) Maximum permissible input speed (always ⩽ 1 500 min^{-1}).
(14) Maximum permissible power at the high speed shaft, with working and efficacious cooling systems, if any: the real power to be applied is to be determined basing on the service (overloads, running time, etc.).
(15) Maximum radial load permissible at the center line of the high speed shaft taking into account the direction of rotation, the most unfavourable direction of the load and n_{1max}.
(16) Speed at low speed shaft (gearmotor): stated only when supplying gearmotor with motor.
(17) Low speed shaft torque (gearmotor), stated only when a complete gearmotor with motor is supplied.
(18) Maximum permissible torque at the low speed shaft as overload (duration ⩽ 15 s).
(19) Maximum radial load permissible at the center line of the low speed shaft end taking into account the direction of rotation, the most unfavourable direction of the load and n_{2max} (= n_{1max} / i).
(20) Lubricant type: PAG (polyglycoles) size ⩽ 81 and for A04 series (all sizes); PAO (polyalfaolephines) for all remaining cases.
(21) ISO viscosity grade.
(22) Rossi code (Work Assembly number).
(23) ATEX mark for gas: group II, cat. 2 or 3, type of applied protection, temperature class*.
(24) ATEX mark for dusts: group II, cat. 2 or 3, type of applied protection, maximum surface temperature*.

* The indication of temperature can be replaced by a X followed by an alfanumeric code, when the temperature limit is determined by gear reducer application conditions (e.g.: presence of an independent oil cooling unit).

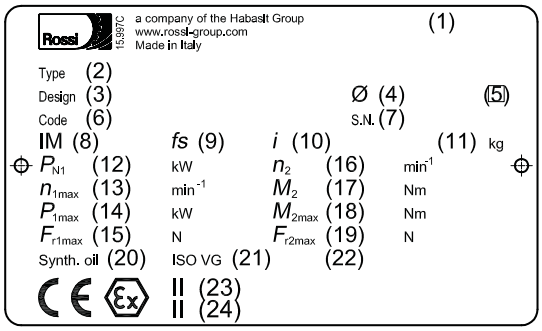

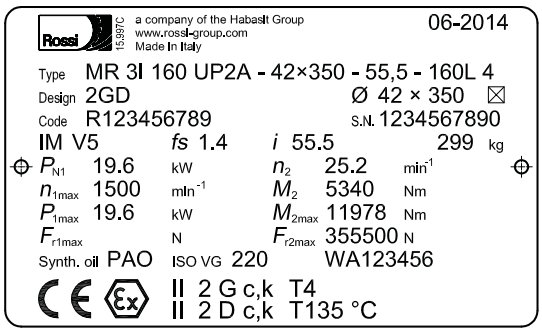

3.3 - Lubricant

Unless otherwise stated, gear reducer sizes 32 ... 81 are supplied **filled** with lubricant whereas sizes 100 ... 6301 (631) are supplied **without** lubricant (see table 6.2).

3.4 - Painting

Gear reducers in ATEX design are externally protected through **electrically conductive enamel** with surface resistivity < 10^8 Ω; color **grey** RAL 7040.

In order not to affect the protection coat of external paint, avoid damages to it both from a mechanical (ex. scratch), chemical (ex. Aggressive acids) and thermal point of view (ex. sparks).

For typology, specifications, resistance to paint chemical agents, see table 3.4.1.

Tab 3.4.1 - Painting.

Series	Size	Internal painting	External painting: Final color **grey RAL 7040**	External painting: Features	Notes
A (A04)	**32 ... 81**	Epoxy powder (prepainted)	Epoxy powder (prepainted) + Water-soluble polyurethan dual-compound **conductive enamel** Total thickness **90 ÷ 120** µm	Resistant to atmospheric and aggressive agents. (corrosivity class **C3** according to ISO 12944-2) Suitable for coats of dual-compound paints only[1] Machined parts painted with water-soluble polyurethan dual-compound conductive enamel	Machined parts are painted with water-soluble polyurethan dual-compound conductive enamel Thickness **50 ÷ 80** µm Remove by a scraper or solvent the eventual paint of gear reducer coupling surfaces
G	**40 ... 81**				
A (A04)	**100 ... 250**	Single compound ester epoxy or phenolic resin basis primer (pre-painted)	Single compound ester epoxy or phenolic resin basis primer (pre-painted) + Water-soluble polyurethan dual-compound **conductive enamel** Total thickness **90 ÷ 120** µm	Resistant to atmospheric and aggressive agents. (corrosivity class **C3** according to ISO 12944-2) Suitable for further coats of dual-compound paints only[1] Machined parts painted with water-soluble polyurethan dual-compound conductive enamel	
E (E04)	**50 ... 180**				
G	**100 ... 360**				
H (H02)	**4000 ... 6301** **400 ... 631**				

1) Before adding further coats of paint, properly protect the seal rings and carefully degrease and sand the gear reducer surfaces (as alternative to sandblasting, it is possible to apply a water soluble primer coat). In case of further coats of paint, use **conductive paint with surface resistivity < 10^8 Ω, only**.

3.5 - Protections and packing

Overhanging free shaft ends and hollow shafts are treated with protective anti-rust long life oil and protected with a plastic (polyethylene) cap (only up to D ⩽ 48 mm for overhanging shafts, D ⩽ 110 mm for hollow shafts). All internal parts are protected with protective anti-rust oil.

Unless otherwise agreed in the order, products are adequately packed as follows: on pallets, protected with a polyethylene film, wound with adhesive tape and strap (bigger sizes); in carton pallets, wound with adhesive tape and strap (smaller sizes); in carton boxes wound with tape (for small dimensions and quantities). If necessary, gear reducers are conveniently separated by means of anti-shock foam cells or of filling cardboard.

Do not stock packed products on top of each other.

4 – Lifting, handling and storing

4.1 - Lifting and handling

Make sure that the lifting equipment (e.g.: crane, hook, eye bolt, straps, etc.) is suitable for the dimensions and total weight of gear reducer or gearmotor (gear reducer, motor, oil, etc.); refer to Rossi technical catalog, if need be.

For the lifting and handling of gear reducer (or gearmotor) use exclusively clearance or threaded holes present in the gear reducer housing feet, as **purely** shown in the figures below.

Avoid unbalanced liftings during the handling (max inclination ±15° compared with mounting position during the transport) and, if necessary, use addition belts in order to balance the load.

Do not use shaft ends.

Do not use motor eyebolts, if any.

Do not use front threads of shaft ends or any external pipes.

Do not add supplementary loads to the gear reducer or gearmotor mass.

Attention! During the lifting and handling:
- do not stand under suspended loads;
- do not damage the gear reducer with an inadequate transport;
- keep the gear reducer filled with oil in the mounting position foreseen in the order.

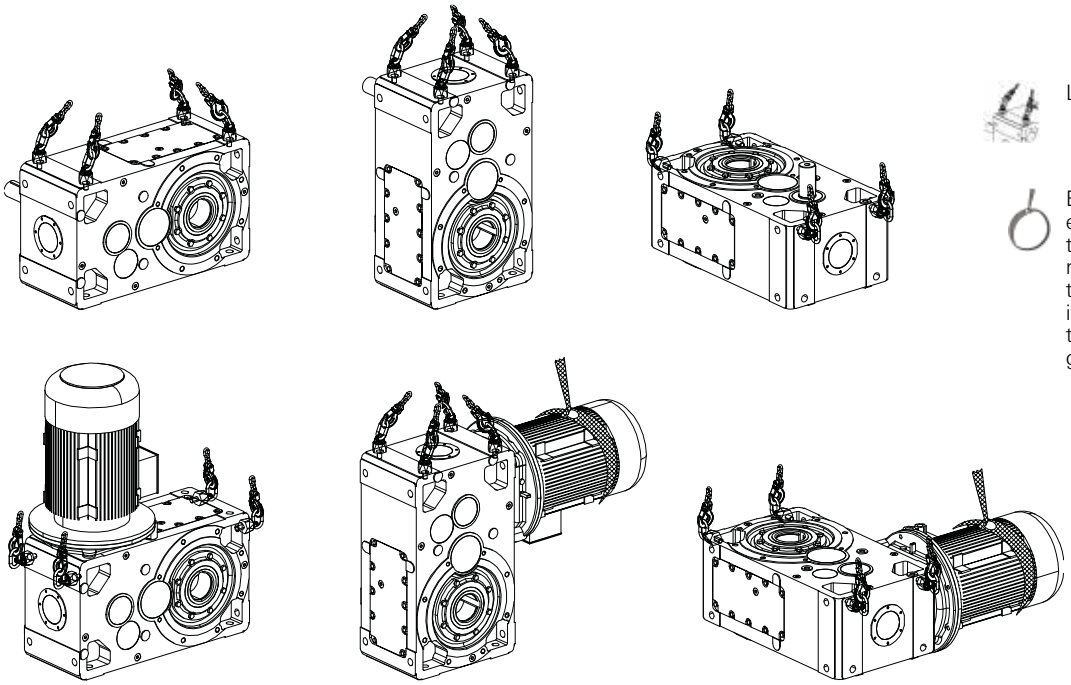

Lifting point

Belt to be used exclusively to assure the motor, when mounted against transport oscillations; it is not to be used for the lifting of the entire gearmotor group.

4.2 - Storing

The ambient must be sufficiently clean, dry (relative humidity < 50%), free from excessive vibrations ($v_{eff} \leqslant 0{,}2$ mm/s) to avoid damage to bearings (excessive vibrations should also be guarded during transit, even if within wider range) and at a temperature of 0 ÷ +40 °C: peaks of 10 °C above and below are acceptable.

The gear reducers filled with oil must be positioned according to the mounting position stated on order and on name plate during storage.

Every six months rotate the shafts (some revolutions are sufficient) to prevent damage to bearings and seal rings.

Assuming normal surroundings and the provision of adequate protection during transit, the unit is protected for storage up to 1 year.

For a 2 year storing period in normal environment or up to 1 year in environment with high humidity and temperature and/or environment with high changes in temperature, it is necessary to pay attention also to following instructions:

– generously grease the seal rings, the shafts and the unpainted machined surfaces, if any, and periodically check the conservation state of the protective anti-rust oil;
– for gear reducers and gearmotors supplied without oil: completely fill the gear reducers with lubrication oil and verify the specified level before commissioning.

For storages longer than 2 years or in aggressive surroundings or outdoors, consult Rossi.

5 - Installation

5.1 - General

Before the installation, **verify that**:

– there is **no potential explosive atmosphere all around**;

– **the category of the machine is suitable to the area where it will be used and the design is suitable to the environmental conditions** (temperature, atmosphere, etc.); for gearmotors it is necessary to do verification both regarding gear reducer and motor on the basis of the data of the respective name plates because their limits of application may be different. **Attention!** Nameplate data refer to gear reducer only; when it is assembled together with a motor, the application limits derive from the combination of the two nameplates considering the most restrictive ones;

– Basing on the name plate data and additional literature, if any, the size of the unit has been chosen **to meet the requirements of the application**, that is service factor $fs = P_{N1}/P_1$ is greater than or equal to fs requested determined basing on instructions given in par. 5.13;

– in each case, $\boldsymbol{fs}$ **is always ⩾ 1** (⩾ **0,85** for worm gear reducers and gearmotors series A04);

– input power $\boldsymbol{P_1}$ **is to be lower than thermal power** determined basing on instructions given in par. 5.14; for further instructions consult Rossi;

– Verify the radial and axial loads are to be according to the max admissible value stated in our technical catalogs. In doubtful cases consult Rossi;

– There were no damages during transport or storage;

– The motor shaft has not been displaced axially in such a way as to result in the fan blades touching the fan cover or shield causing possible damage to one or more bearings;

– Gear reducers supplied complete with oil contain the correct quantity of oil for the mounting position specified on the nameplate (see ch. 13 ... 16); and there is a filler plug with filter and valve (see ch. 6.1);

– Unpainted surfaces not used for assembly are protected with paint suitable for the environment; the paint must be conductive type;

– the structure on which gear reducer or gearmotor is fitted is plane, levelled and sufficiently dimensioned in order to assure fitting stability and vibration absence, (vibration speed $\boldsymbol{v}_{eff}$ < 3,5 mm/s for P_1 < 15 kW and $\boldsymbol{v}_{eff}$ < 4,5 mm/s for P_1 > 15 kW are acceptable), keeping in mind all transmitted forces due to the masses, to the torque, to the radial and axial loads;

– Used mounting position corresponds to the one stated on name plate;

– Electrical connection (power supply, etc.) corresponds to motor name plate data.

The **probes** (e.g.: Pt 100) and the **thermostats**, when foreseen, **are separately supplied** and therefore it **is necessary to install them on the gear reducer**, in the position stated in the **SPT scheme** attached to present ATEX Operating Instructions and following the instructions at par. 9.2, 9.3 and 9.4.

Connect to proper checking device such probes: see SPT scheme and ch. 9.2, 9.3 and 9.4.

Connect the eventual coil (or internal heat exchanger) to the external water circuit.

For equipments suitable for speed variation, utilise a control system (**e.g. encoder connected to a safety system**) **in order not to exceed the maximum input speed of 1 500 min^{-1}.**

The gear reducer or gearmotor can be installed only if in the environment there is no potentially explosive atmosphere during the installation.

When a motor is assembled to a gear reducer or gearmotor without motor verify that it satisfies the **minimum safety requirements** according to ATEX 2014/34/UE (see table 5.1) and that the relevant application limits (n_{1max}, P_{1max}, etc.) stated on the nameplate of gear reducer (or of gearmotor without motor).

Tab. 5.1 - Minimum safety requirements for ATEX motor

Zone	Motor[1)]	Thermal probes	$T_{surface}$
1 (G)	II 2G EEx e, EEx d, EEx de	Thermistors or Pt100	To be defined according to zone application characteristics
21 (D)	II 2D IP65		
2 (G)	II 3G EEx n	—	
22 (D)	II 3D IP55 (II 2D IP65 for conductive dust)		

1) The devices suitable for zone 1 are also suitable for zone 2; similarly the devices suitable for zone 21 are also suitable for zone 22.

Install the unit in such a way that the level plug is accessible for inspection (where applicable).

Attention! Bearing life, good shaft and coupling running depend on alignment precision between the shafts. Carefully align the gear reducer with the motor and the driven machine (with the aid of shims if need be; for gear reducer size ⩾ 400 use level tapped holes), interposing adequate couplings if need be.

Incorrect alignment may cause breakdown of shafts and/or bearings (**which may cause overheatings**) **which may represent heavy danger for people.**

Position the gear reducer or gearmotor so as to allow a free passage of air for cooling both gear reducer and motor (especially at the fan side of gear reducer and motor).

Avoid any obstruction to the air flow; heat sources near the gear reducer that might affect the temperature of cooling air and of gear reducer (**for radiation**); **insufficient air recycle and applications hindering the steady dissipation of heat. Do not intake heated air.**

Mount the gear reducer so as not to receive vibrations.

Mating surfaces (of gear reducer and machine) must be clean and sufficiently rough to provide a good friction coefficient (aproximately Ra 3,2 ÷ 6,3 μm): remove by a scraper or solvent the eventual paint of gear reducer coupling surfaces. When external loads are present use pins or locking blocks, if necessary.

For the dimensions of fixing bolts of gear reducer feet and flanges and the depth of tapped holes consult the Rossi technical catalogs: for bolt tightening torques see ch. 5.2.

When fitting gear reducer and machine and/or gear reducer and eventual flange **B5** it is recommended to use locking adhesives such on the fastening screws (also on flange mating surfaces).

The bonding connection of gear reducer and eventually his base, must be carried out through one of the free housing holes:

– remove paint from mating surface;

– use conductors of adequate section according to the regulations in force, see table 3 of EN 50014 standard, considering as traverse section area of phase conductors of the installation the one of the motor power supply cables;

– point out the place used for the earth connection **with adequate symbols;**

Mating surfaces of connections must be clean and protected against corrosion and conductors must not be subjected to mechanical stresses.

Before wiring-up the gearmotor make sure that motor voltage corresponds to input voltage. If direction of rotation is not as desired, invert two phases at the terminals of three phase asynchronous motor.

Y-Δ starting should be adopted for no-load starting (or with a very small load) and for controlled starts, low starting current and limited stresses, if requested.

If overloads are imposed for long periods or if shocks or danger of jamming are envisaged, then motor-protection, electronic torque limiters, fluid couplings, safety couplings, control units or other similar devices should be fitted.

Usually protect the motor with a thermal cut-out however, where duty cycles involve a high number of on-load starts, it is necessary to use **thermal probes** for motor protection (fitted on the wiring); magnetothermic breaker is unsuitable since its threshold must be set higher than the motor nominal current of rating.

Connect thermal probes, if any, to auxiliary safety circuits.

Use varistors and/or RC filters to limit voltage peaks due to contactors. Fuses do not prevent from voltage peaks.

With non-electric motors (i.e. hydraulic motors) install torque limiters (i.e. max pressure valves) and do not exceed n_1 = 1 500 min^{-1}.

Verify that the above mentioned accessories comply with application zone.

When gear reducer is equipped with a **backstop device** - whose presence is given by an arrow near the low speed shaft stating the free rotation direction - provide a protection system where a backstop device breaking could cause personal injury or property damage.

In polluting surroundings, **take suitable precautions against lubricant contamination through seal rings or other.**

When the gear reducer or gearmotors is over painted, use conductive **paint with surface resistivity < 10^8 Ω**.

Gear reducers and gearmotors should be protected by appropriate means from solar radiance and extremes of weather.

If it is necessary to run the gear reducer or gearmotor with free shafts, securely fasten the key in the keyway.

For ambient temperature greater than +40 °C or less than 0 °C, consult Rossi.

5.2 - Tightening torques for fastening bolts (feet, flange, accessories) and for plugs

Unless otherwise stated, it is usually sufficient to apply screw class 8.8.

Before tightening the bolt be sure that the eventual centering of flanges are inserted properly.

The bolts are to be diagonally tightened with the maximum tightening torque.

Before tightening, carefully degrease the screws; in the event of heavy vibrations, heavy duties, frequent drive inversions apply a proper thread-locking sealant Loxeal 23-18 or equivalent.

Table 5.2.1 - Tightening torque for fastening bolts, feet and flanges

Screw	M_S [N m] UNI 5737-88, UNI 5931-84		
	cl. 8.8	cl 10.9	cl. 12.9
M4	2.9	4	–
M5	6	8.5	10
M6	11	15	20
M8	25	35	40
M10	50	70	85
M12	85	120	145
M14	135	190	230
M16	205	290	350
M18	280	400	480
M20	400	560	680
M22	550	770	930
M24	710	1 000	1 200
M27	1 000	1 400	1 700
M30	1 380	1 950	2 350
M33	2 000	2 800	3 400
M36	2 500	3 550	4 200
M39	2 950	4 200	5 000
M42	4 100	5 800	6 900
M45	5 000	7 100	8 400
M48	6 100	8 600	10 300
M56	9 800	13 800	16 500

Table 5.2.2 - Tightening torque for plugs

Gear red. size	Thread dimension	M_S [N m]
40, 50	G 1/4''	7
63 ... 81	M16 × 1,5	14
100 ... 140	G 1/2''	14
160 ... 280	G 3/4''	14
320 ... 360	G 1''	25

5.3 - Flange mounting

Carefully select the length of fixing screws when using tapped holes (B14) for gear reducer fitting, in order to assure a sufficient meshing thread length (minimum length 1,5 · D screw), for the correct gear reducer fitting to the machine without breaking down the threading seat.

Locking adhesives are recommended both around threads and on mating surfaces.

For the dimensions of fixing screws and the depth of tapped holes consult Rossi technical catalogs.

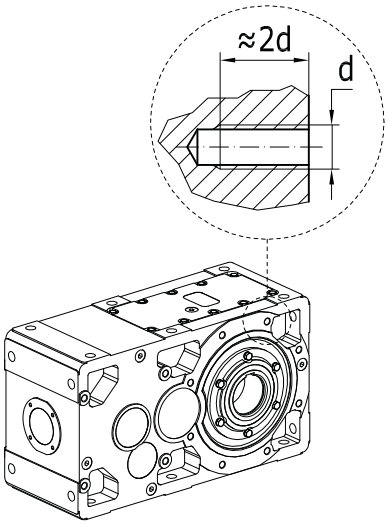

Flange **B14**

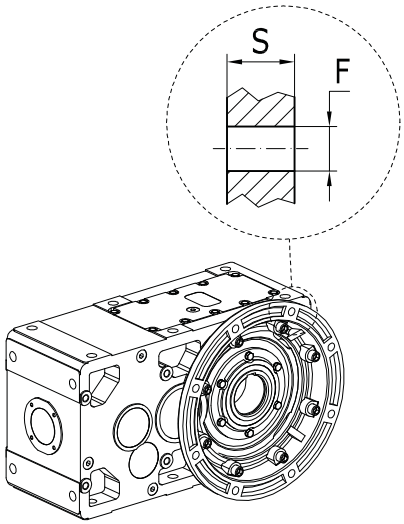

Flange **B5**

5.4 - Foot mounting

A (A04) Series

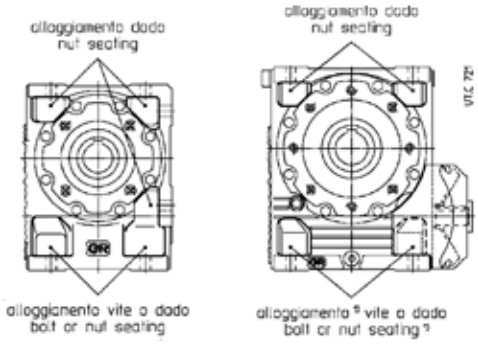

1) For the fastening of fan side screws (sizes 100 ... 250) disassemble the fan cover (which has to cover the seating for the best air flow) and therefore any walls must distance from this one at least half gear reducer center line.

Gear red. size	Worm UNI 5737-88 × l_{max}
32	M6 × 25
40	M8 × 35
50	M8 × 40
63, 64	M10 × 50
80, 81	M12 × 60
100	M14 × 55
125, 126	M16 × 65
160, 161	M20 × 80
200	M24 × 90
250	M30 × 120

E (E04) Series

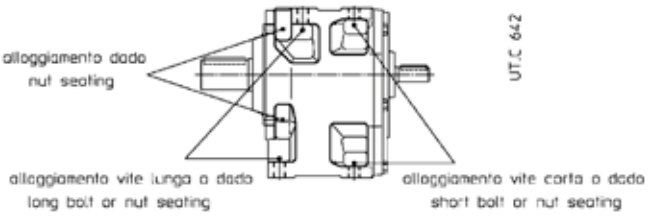

Gear red. size	Short bolt	Long bolt
	UNI 5737-88 × l_{max}	
50, 51	M10 × 30	M10 × 35
63, 64	M12 × 35	M12 × 40
80, 81	M14 × 40	M14 × 50
100, 101	M16 × 50	M16 × 60
125, 126, 140	M20 × 60	M20 × 70
160, 180	M24 × 70	M24 × 90

G series

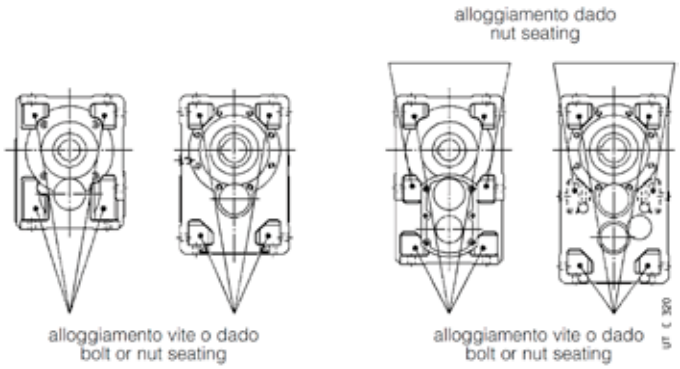

Gear red. size	Worm UNI 5737-88 × l_{max}
40	M6 × 22
50	M8 × 30
63, 64	M10 × 35
80, 81	M12 × 40
100	M14 × 50
125, 140	M16 × 55
160, 180	M20 × 70
200, 225	M24 × 90
250, 280	M30 × 110
320 ... 360	M36 × 130

5.5 - Shaft mounting

Important! When shaft mounted, the gear reducer must be supported both axially and radially (also for mounting positions B3 ... B8) by the machine shaft end, as well as anchored against rotation only, by means of a reaction having **freedom of axial movement** and sufficient clearance in its **couplings** to permit minor oscillations always in evidence without provoking dangerous overloading on the gear reducer. Lubricate with proper products the hinges and the parts subject to sliding; when mounting the screws it is recommended to apply **locking adhesives**.

Important! Concerning the reaction system, follow the project indications stated in the technical catalogs Rossi. Whenever personal injury or property damage, due to falling or projecting parts of gear reducer or of its parts, may occur, foresee **adequate supplementary protection devices against**:

– **rotation** or **unthreading of the gear reducer from shaft end** of driven machine following to accidental breakage of the reaction arrangement;

– accidental breakage of shaft end of driven machine.

Kit using reaction disc springs (reaction recess), size ⩽ 125 helical

For the kit mounting, use the tapped butt end hole on the shaft end of the driven machine and the flat machined chamfered surface for compressing and fitting the disc springs into the reaction recess.

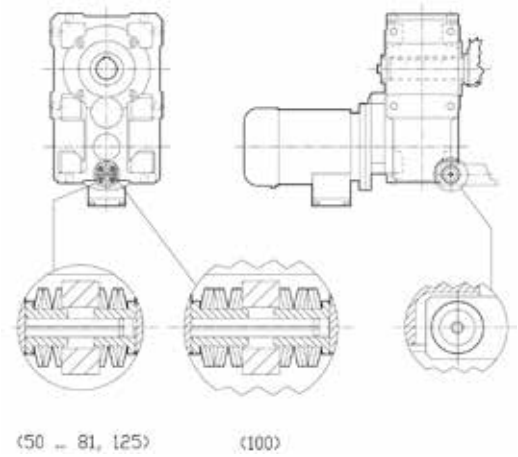

System with **reaction bolt using disc spring**

For helical and bevel helical gear reducers sizes 140 ... 360 C2I, 2I, 3I, mounting position B3 or B8, ensure that the **housing oscillation, during the running, does not overtake** – towards the top – **the horizontal position.**

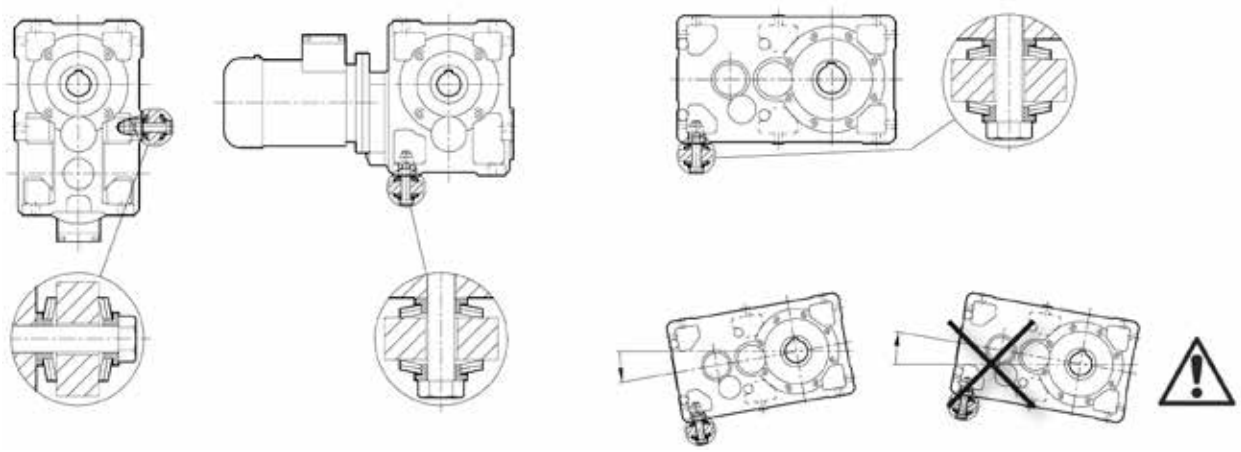

System with **rigid** or **flexible torque arm**

If the direction of rotation is opposite to that given in the fig. rotate the rigid torque arm by 180° (unnecessary operation in case of flexible torque arm).

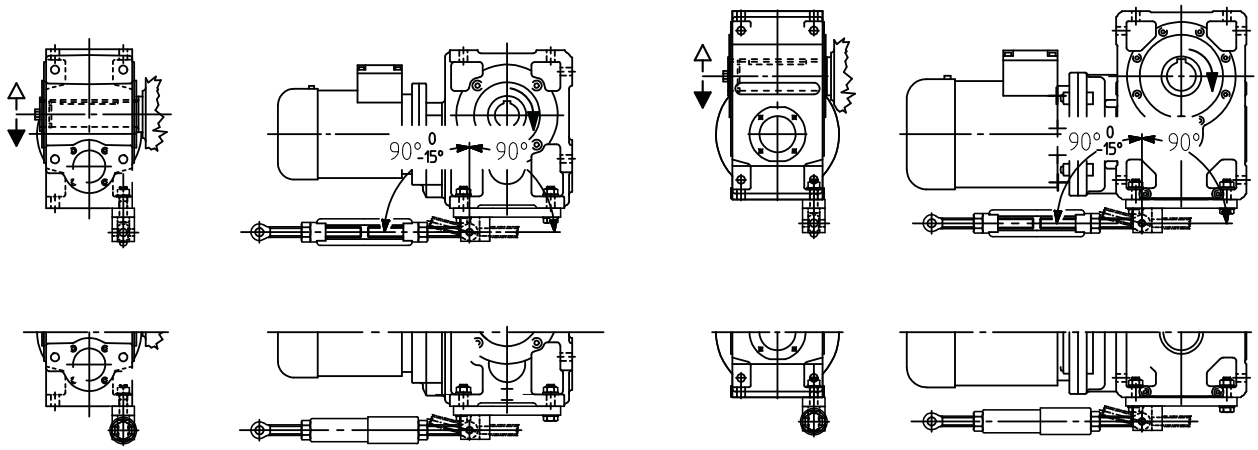

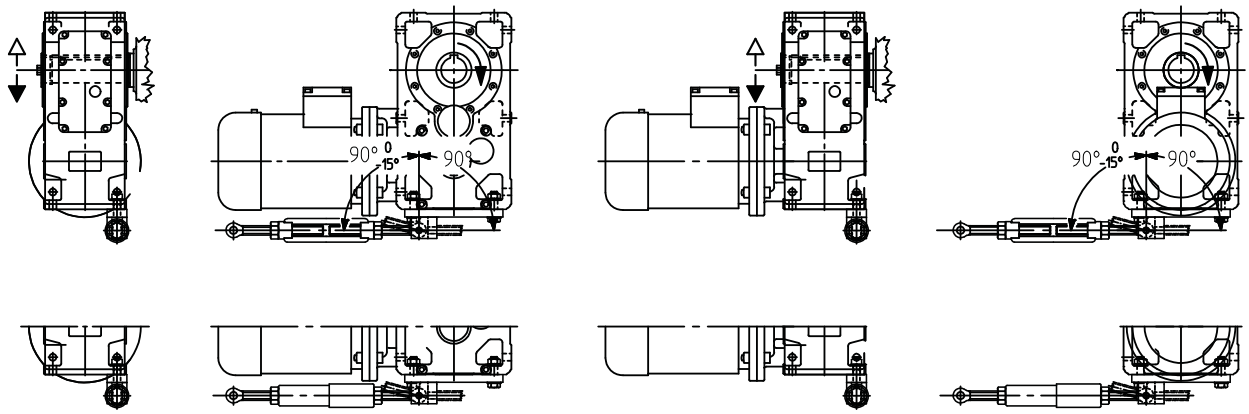

System with **torque arm**

According to dimensions, some mounting positions of the motor flange torque arm could not be possible.

Before mounting the reaction arm, clean carefully the coupling surfaces and apply locking adhesives on the screws and on mating surfaces. Tighten the screws by a dynamometric wrench at values shown in the table 5.2.1.

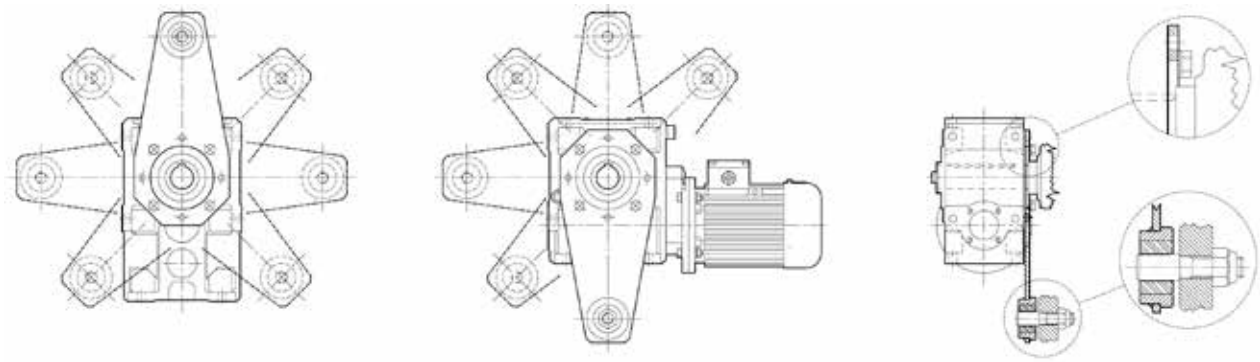

5.6 - Hollow low speed shaft mounting

For machine shaft ends onto which the hollow shafts of gear reducers are to be keyed, h6, j6, and k6 tolerances are recommended, according to requirements (duty type, overloads, etc.).

Important! The shoulder diameter of the driven machine shaft end abutting with the gear reducer must be at least 1,18 ÷ 1,25 times the internal diameter of the hollow shaft. For other data on machine shaft end, in case of standard hollow low speed shaft, stepped shaft, with locking rings or bushing, with shrink disc see Rossi technical catalogs.

When assembling a hollow low speed shaft gear reducer verify that the hollow shaft is in line with the machine shaft end.

Attention! For **vertical ceiling-type mounting** and only for gear reducers equipped with locking rings or bushing, gear reducer support is due only to friction, for this reason it is advisable to provide it with a fastening system.

Warning! Even if hollow low speed shaft are completely machined in H7 tolerance, a check through bott could reveal two zones with **slightly lowered** diameter (see fig. 5.6.1): this lowering is intentional and not affecting the **keying quality** – which is **improved** in terms of **duration** and **precision** – and is not hindering the mounting of machine shaft end executed as shown in fig. 5.7.1.

Warning! When **mounting** the gear reducer on the machine shaft end, D diameter (**, see fig. 5.6.2) at hollow shaft engagement (standard, stepped shaft, with shrink disc) it is slightly oversized compared with the rated dimensions: However this won't affect the connection reliability.

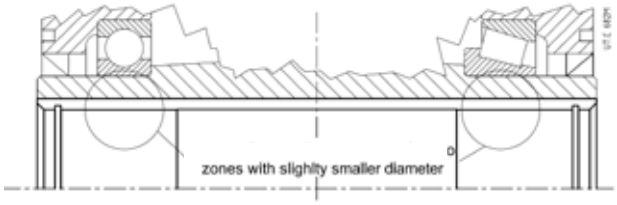

Fig. 5.6.1

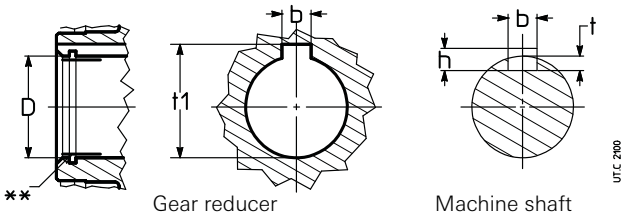

Fig. 5.6.2

Table 5.6.1 - Hollow low speed shaft

Hole	Parallel key			Keyway		
D Ø H7	**b** × **h** × **l*** h9 h11			**b** H9 hub N9 shaft	**t** shaft	**t_1** hub
19	6 × 6 × 50[2]			6	3,5	21,8[3]
24	8 × 7 × 63[2]			8	4	27,3[3]
28	8 × 7 × 63			8	4	31,2
30	8 × 7 × 63			8	4,5[1]	32,7[1]
32	10 × 8 × 70			10	5	35,3
38	10 × 8 × 90			10	5,5[1]	40,7[1][4]
40	12 × 8 × 90			12	5[1]	43,3
48	14 × 9 × 110			14	5	51,8
60	18 × 11 × 140			18	7	64,4
70	20 × 12 × 180			20	8[1]	74,3[1]
75	20 × 12 × 180			20	7,5	79,9
80	22 × 14 × 200			22	9	85,4
90	25 × 14 × 200			25	9	95,4
100	28 × 16 × 250			28	10	106,4
110	28 × 16 × 250			28	10	116,4
125	32 × 18 × 320			32	11	132,4
140	36 × 20 × 320			36	12	148,4
160	40 × 22 × 400			40	14[1]	168,3[1]
180	45 × 25 × 400			45	15	190,4
200	45 × 25 × 600			45	15	210,4
220	50 × 28 × 600			50	17	231,4
250	56 × 32 × 750			56	20	262,4
280	63 × 32 × 750			63	20	292,4
310	70 × 36 × 840			70	22	324,4

* Recommended length.
1) Values not to standard.
2) For worm gear reducer dimension l* = 36 and 45 respectively.
3) For worm gear reducers dimension t_1 = 21,7 e 27,2 respectively.
4) For worm gear reducer dimension t_1 = 41,3.

5.7 - Gear reducer assembly and disassembly

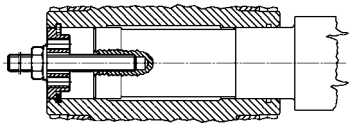

Fig. 5.7.1

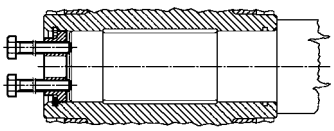

Fig. 5.7.2

When **assembling** and **disassembling** the gear reducers and gearmotors with hollow low speed shaft and groove for retaining ring – both with keyway and with shrink disc - proceed as per fig. 5.7.1 and 5.7.2, respectively (excluding helical gearmotors MR 3I 100 with motor size 112 and MR 3I 125 with motor size 132; consult us).

For helical gearmotors MR 3I 64 ... 81 first insert the washer with screw and the retaining ring into gear reducer hollow shaft (on motor opposite side); then mount the gear reducer on machine shaft end.

5.8 - Gear reducer axial fastening

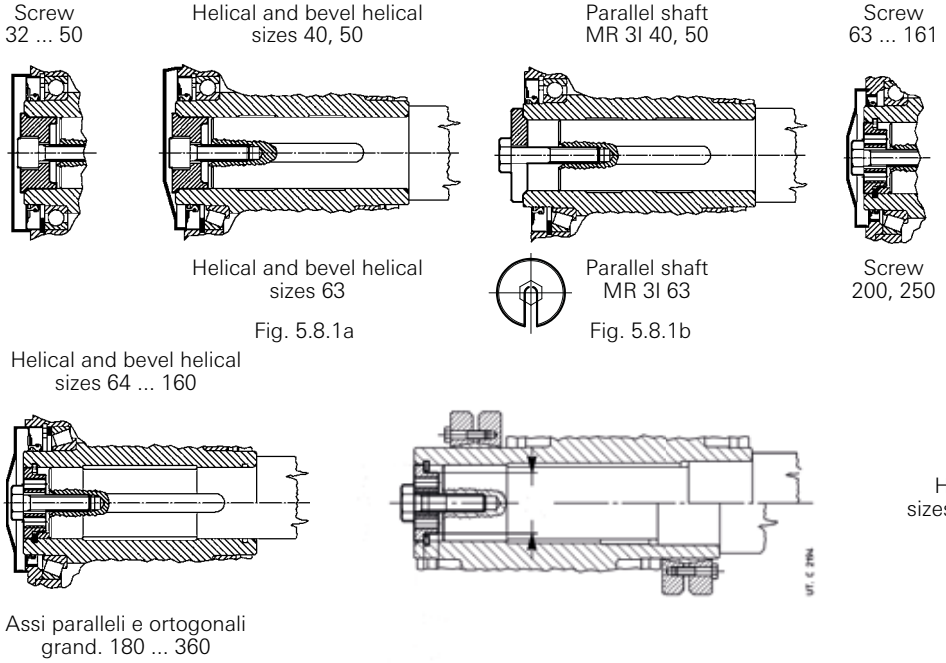

Fig. 5.8.1a

Fig. 5.8.1b

Fig. 5.8.2

Fig. 5.8.3

For the **axial fastening** it is possible to adopt the system per fig. 5.8.1 and 5.8.2. For sizes 64 ... 360, when shaft end of driven machine has no shoulder, a spacer may be located between the retaining ring and the shaft end itself (as in the lower half of the fig. 5.8.2). Parts in contact with the retaining ring must have sharp edges.

5.9 - Gear reducer keying with key and locking rings or bush

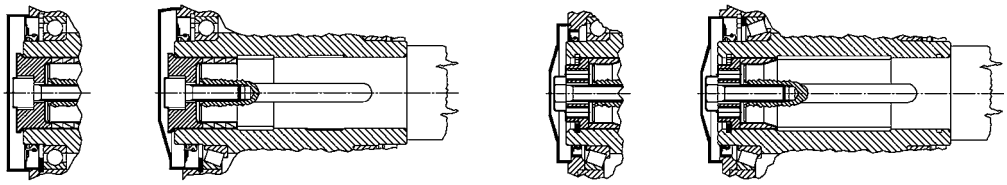

Fig. 5.9.1

Fig 5.9.2

The use of **locking rings** (fig. 5.9.1) or of **locking bushing** (fig. 5.9.2) will permit easier and more accurate installing and removing and to eliminate backlash between key and keyway; friction system compatible with ATEX design.

The locking rings or the locking bushing are fitted after mounting (for MR 3I 64 ... insert the bushing onto machine shaft end or into hollow shaft before mounting; pay attention when positioning the keyway). Do not use molybdenum bisulphide or equivalent lubricant for the lubrication of the parts in contact. When tightening the bolt, we recommend the use of a **locking adhesive** LOCTITE 601. For vertical ceiling-type mounting, contact us.

In case of axial fastening with locking rings or bushing – especially when having heavy duty cycles, with frequent reversals – verify, after some hours of running, the bolt tightening torque and eventually apply the locking adhesive again.

Respect the tightening torques stated in the table 5.9.1.

Attention! In applications with **travelling lifts**, the locking bush isn't sufficient anymore to grant a stable keying of the hollow low speed shaft with machine shaft end, even when the axial fastening bolt is fixed with locking adhesive. In these cases, it is necessary to key with hollow shaft and shrink disc. This is valid, in general, also when there is a high frequency of startings and brakings motion reversal and when the inertia ratio J/J_0 is very high (> 5).

Table 5.9.1 - Tightening torque for axial fastening bolts with rings or locking bush

Series	Gear reducer size																
A (**A04**)	**32**	**40**	**50**	**63 64**	**–**	**80 81**	**–**	**125 126**	**160 161**	**–**	**200**	**–**	**250**	**–**	**–**	**–**	**–**
G	**40**	**50**	**–**	**63 64**	**80**	**81**	**100**	**125**	**140**	**160**	**180**	**200**	**225**	**250**	**280**	**320 321**	**360**
Screw UNI 5737-88 cl 8.8	M8[1)]	M8[1)]	M10[1)]	M10	M10	M10[2)]	M12[2)]	M14[2)]	M16	M20	M20[2)]	M24	M24[2)]	M30	M30[2)]	M36	M36[3)]
Tightening torque M_S [N m]	29	35	43	43	51	53	92	17	21	34	43	66	83	135	166	257	315

1) UNI 5931-84 cl. 8.8 (excluding MR 3I).
2) UNI 5737-88 cl. 10.9 (excluding worm gear reducer sizes 80, 81, 125, 126).
3) UNI 5931-84 cl. 10.9.

5.10 - Mounting of hollow low speed shaft with shrink disc

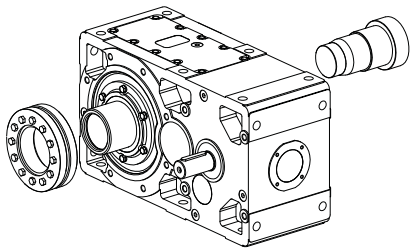

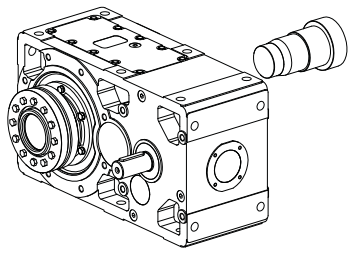

Shrink disc
machine opposite side

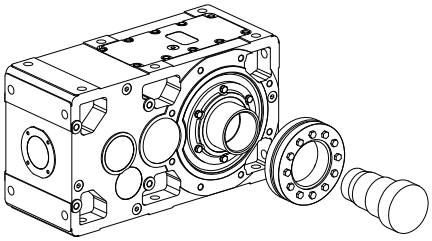

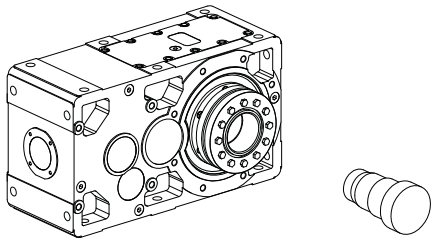

Shrink disc
machine side

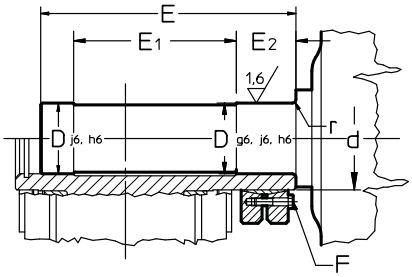

Shrink disc
machine side
(sizes 40 ... 125)

Fig. 5.10.1

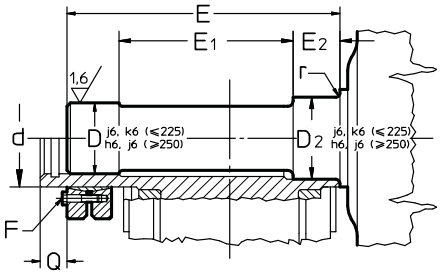

Shrink disc
machine opposite side
(sizes 140 ... 631)

Fig. 5.10.2

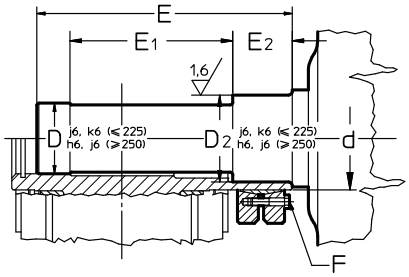

Shrink disc
machine side
(sizes 140 ... 631)

Fig. 5.10.3

Tab. 5.10.1 - Hollow low speed shaft and machine shaft end with shrink disc [4)]

Gear reducer series G, H (H02)*	D Ø H7	D_2 H7	d Ø	E	E 1)	E_1	E_1 1)	E_2	E_2	F UNI 5737-88 cl. 10.9	M_S N m 2)	Q
40	20	–	24	99,5	–	65	–	25	–	M5 n. 6	4	–
50	25	–	30	116,5	–	77	–	30	–	M5 n. 7	4	–
63	30	–	38	135,5	–	86	–	34	–	M6 n. 5	12	–
64	35	–	44	140	–	86	–	36	–	M6 n. 7	12	–
80, 81	40	–	50	166	–	103	–	39,5	–	M6 n. 8	12	–
100	50	–	62	197	–	122	–	46,5	–	M8 n. 6	30	–
125	65	–	80	239	–	148	–	55	–	M8 n. 8	30	–
140	70	75	90	273	294,5	180	192,5	52	52	M8 n. 10	30	27,5
160	80	85	105	307	329	199	208	62	57	M10 n. 9	60	29
180	90	100	120	335	363	221	228	65	63	M10 n. 12	60	35
200	100	110	130	377	402	251	260	72	66	M12 n. 10	100	33,5
225	110	120	140	404	428	265	277	78	75	M12 n. 12	100	32,5
250	125	135	160	461	493	307	318	86	84	M16 n. 8	250	45
280	140	150	180	506	543	324	337	104	94	M16 n. 10	250	47
320, 321	160	170	200	567	607	375	388	104	107	M16 n. 12	250	50
360	180	195	230	621	668	400	414	124	116	M16 n. 15	250	57
4000, 4001*	210	220	260	754	788	446	480	165	165	M20 n. 14	490	47
4500, 4501*	230	240	280	768	799	434	465	180	180	M20 n. 16[3)]	490	44
5000, 5001*	260	270	320	935	970	565	600	200	200	M20 n. 20[3)]	490	53
5600, 5601*	290	300	360	958	992	538	572	225	225	M20 n. 24[3)]	490	55
6300, 6301*	325	335	400	1063	1110	603	650	250	250	M24 n. 21[3)]	840	74

* Corresponding sizes of H02 series: 400, 401; 450, 451; 500, 501; 560, 561; 630, 631.

1) Values valid for shrink disc on machine opposite side.
2) Screw tightening torque.
3) In case of shrink disc on machine side n. screw 14 for sizes 4500 ... 4501 (450 ... 451); 16,16 for sizes 5000 ... 5601 (500 ... 561); 18 for sizes 6300 ... 6501 (630 ... 651), respectively.
4) For design with labyrinth seals at low speed shaft, the dimensions E, E1, E2 are changing: please consult us.

Attention! Verify that machine shaft end has dimensions, tolerances and roughness as per fig. 5.10.1 ... 5.10.3 and table 5.10.1; the respect of these prescriptions guarantees the correct running of the shrink disc and is an integrating part of ATEX protection system.

Pre-arrange a proper protection of the shrink disc against the accidental contact and against the dust; when it is not possible (eg.: machine through shaft) foresee an adequate maintenance plan to guarantee that the thickness of the material is reduced and never exceeding 5 mm.

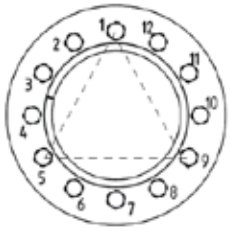

Fig. 5.10.4

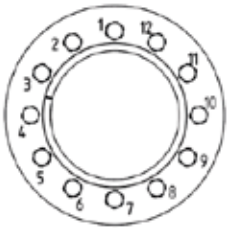

Fig. 5.10.5

Installing

Attention! Do not tighten the screws of shrink disc before mounting the gear reducer onto machine shaft in order not to deform the hollow shaft. When keying the shrink disc follow these instructions:

- carefully degrease the surfaces of hollow shaft and shaft end of driven machine to be fitted;
- mount the shrink disc on gear reducer hollow shaft by lubricating first the external surface; position axially to dimension «Q» (see tab. 5.10.1) the shrink disc.
- slightly tighten a first group of three screws positioned at about 120° as shown in fig. 5.10.4;
- tighten the screws by a dynamometric wrench – calibrated at a value approximately higher than 5% compared to the one foreseen in table 5.10.1 – the screws of shrink disc must be gradually and uniformly tightened, with continous sequence (not diagonally!) see fig. 5.10.5 and during several phases (approx. 1/4 rotation each time) until the 1/4 rotation is not possible anymore;
- tighten again 1 or 2 times with dynamometric wrench verifying that the tightening torque stated in table 5.10.1 has been realized;
- when having heavy duty cycles, with frequent reversals, verify again after some hours of running, the bolt tightening torque.
- verify the screw tightening torque at every maintenance interval (oil change) or in case of anomalous vibrations (see table 12.2).

Removing

Before disassembling, ensure that no torque/load is applied on the shrink disc, on shaft or other connected elements.

Attention! Do not completely remove fastening screws before locking rings are disengaged. Risk of serious injury!!!

Clean off any rusty areas.
Loosen the fastening screws one after the other only by using approx. ½ turn at a time and by a continuous sequence (not crossing), until shrink disc can be moved on hollow shaft.
Remove the gear reducer from machine shaft end.

5.11 - Fitting of components to low and high speed shaft ends

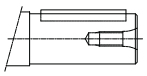

High speed shaft end

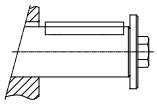

Standard low speed shaft end

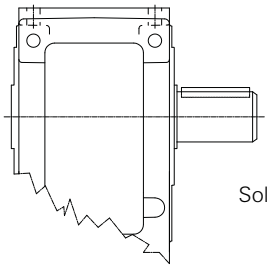

Solid low speed shaft end

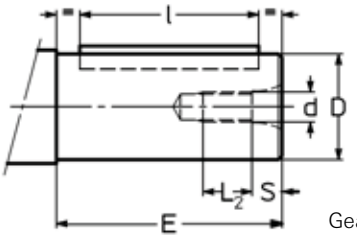

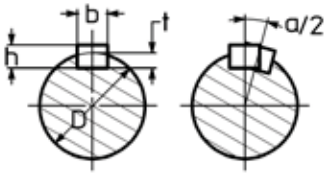

Gear reducer shaft end

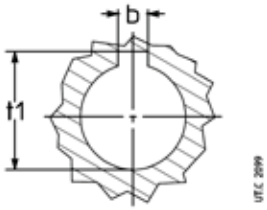

Machine shaft

Tab. 5.11.1 - Low and high speed shaft ends

Shaft end											Parallel key						Keyway		
D Ø	1)	2)	3)	E 1)	E 2) 3)	d Ø	S	L 1)	L 2) 3)	α/2[4] arc min	b h9	×	h h11	×	l 1)	l 2) 3)	b H9 hub N9 shaft	t shaft	t_1 hub
11	j 6	–	–	23	20	M5	3.6	9.4	–	–	4	×	4	×	18	12	4	2.5	12.7
14	j 6	–	–	30	25	M6	4.6	11.4	–	–	5	×	5	×	25	16	5	3	16.2
16	j 6	–	–	30	–	M6	4.6	11.4	–	–	5	×	5	×	25	–	5	3	18.2
19	j 6	h7	–	40	30	M6	4.6	11.4	13.4	5.43	6	×	6	×	36	25	6	3.5	21.7
24	j 6	h7	–	50	36[7]	M8	5.9	15.1	17.1	5.16	8	×	7	×	45	25	8	4	27.2
28	j 6	–	–	60	42	M8	5.9	15.1	–	–	8	×	7	×	45	36	8	4	31.2
30	–	h7	–	58	58[7]	M10	7.6	–	20.4	4.13	8	×	7	×	45	45	8	4	33.2
32	k 6	h7	–	80	58[7]	M10	7.6	18.4	20.4	3.87	10	×	8	×	70	50	10	5	35.3
38	k 6	h7	–	80	58	M10	7.6	18.4	20.4	3.27	10	×	8	×	70	50	10	5	41.3
40	–	h7	–	–	58	M10	7.6	–	20.4	3.7	12	×	8	×	50	50	12	5	43.3
42	k 6	–	–	110	–	M12	9.5	22.5	–	–	12	×	8	×	90	–	12	5	45.3
45	k 6	–	–	110	82	M12	9.5	22.5	–	–	14	×	9	×	90	–	14	5.5	48.8
48	k 6	h7	k6	110	82	M12	9.5	22.5	26.5	3.08	14	×	9	×	90	70	14	5.5	51.8
55	m 6	–		110	82	M12	9.5	22.5	–	–	16	×	10	×	90	70	16	6	59.3
60	m 6	h7	k6	140	105[5]	M16	12.7	27.3	35.3	2.46	18	×	11	×	110	90	18	7	64.4
70	m 6	h7	k6	140	105	M16	12.7	27.3	35.3	2.55	20	×	12	×	125	90	20	7.5	74.9
75	m 6	–	–	140	105	M16	12.7	27.3	–	–	20	×	12	×	125	90	20	7.5	79.9
80	m 6	h7	k6	170	130	M20	16	–	44	2.23	22	×	14	×	140	110	22	9	85.4
90	m 6	h7	k6	170	130	M20	16	34	44	1.99	25	×	14	×	140	110	25	9	95.4
95	m 6	–	–	170	–	M20	16	34	–	–	25	×	14	×	140	–	25	9	100.4
100	–	j6	k6	–	165	M24	19	–	41	1.79	28	×	16	×	–	140	28	10	106.4
110	m 6	j6	k6	210	165	M24	19	41	41	1.63	28	×	16	×	180	140	28	10	116.4
125	–	j6	k6	210	200[6]	M30	22	–	45	1.71	32	×	18	×	180	180	32	11	132.4
140	–	j6	k6	–	200	M30	22	–	45	1.52	36	×	20	×	180	180	36	12	148.4
160	–	j6	k6	–	240	M36	27	–	54	1.33	40	×	22	×	220	220	40	13	169.4
180	–	j6	k6	–	240	M36	27	–	54	1.18	45	×	25	×	220	220	45	15	190.4
190	–	–	m6	–	280	M36	27	–	54	9)	45	×	25	×	–	250	45	15	200.4
200	–	–	m6	–	280	M36	27	–	54	9)	45	×	25	×	–	250	45	15	210.4
210	–	–	m6	–	300	M36	27	–	54	9)	50	×	28	×	–	280	50	17	221.4
220	–	–	m6	–	300	M36	27	–	54	9)	50	×	28	×	–	280	50	17	231.4
240	–	–	m6	–	330	M45	33	–	67	9)	56	×	32	×	–	300	56	20	252.4
250	–	–	m6	–	330	M45	33	–	67	9)	56	×	32	×	–	300	56	20	262.4
270	–	–	m6	–	380	M45	33	–	67	9)	63	×	32	×	–	360	63	20	282.4
280	–	–	m6	–	380	M45	33	–	67	9)	63	×	32	×	–	360	63	20	292.4
300	–	–	m6	–	430	M45	33	–	67	9)	70	×	36	×	–	400	70	22	314.4
320	–	–	m6	–	430	M45	33	–	67	9)	70	×	36	×	–	400	70	22	334.4

1) Values valid for high speed shaft end.
2) Values valid for standard low speed shaft end.
3) Values valid for solid low speed shaft end.
4) Maximum angular disalignment of keyways on double extension shafts.
5) For helical and bevel helical gear reducers, standard low speed shaft end E = 97 (E = 101 for double extensions shaft); value not unified.
6) Value not to standard.
7) For helical gear reducer MR 3I with standard low speed shaft end, dimension E increases by 1.
8) For worm gear reducer size 81 E = 80.
9) Consult us.

Incorrect

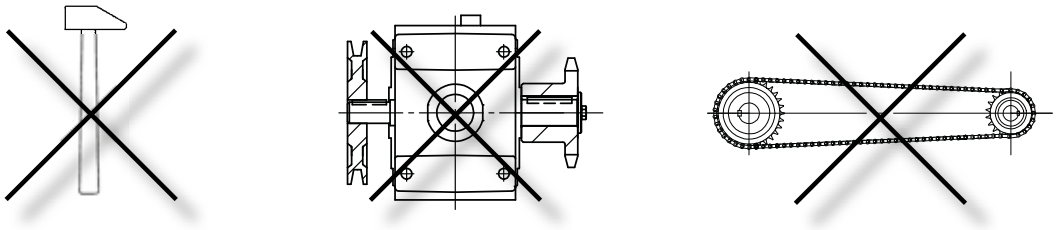

Correct

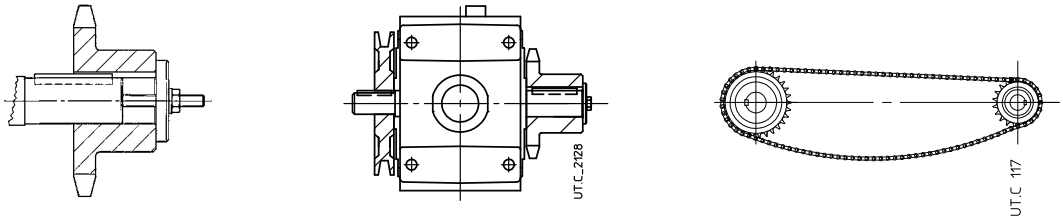

Generally, it is recommended to machine the hole of parts keyed onto shaft end, tolerance **H7**. For high speed shaft end with D ⩾ 55mm tolerance can be **G7**, provided that load is uniform and light.

For low speed shaft with D ⩽ 180 tolerance must be **K7**, provided that load is not uniform and light.

Before mounting, thoroughly clean mating surfaces and lubricate against seizure and fretting corrosion.

Attention! Installation and removal operations should be carried out with the aid of **jacking screws** and **pullers** using the tapped hole at the shaft butt-end (see table in fig. 2) taking care to avoid impacts and shocks which may **irreparably damage the bearings**, the circlips or other parts or cause sparks; for H7/m6 and K7/j6 fits it is advisable that the part to be keyed is preheated to a temperature of 80 ÷ 100 °C.

The couplings having a tip speed on external diameter up to 20 m/s must be statically balanced; for higher tip speeds they must be dynamically balanced.

Where the transmission link between gear reducer and machine or motor generates shaft end loads, ensure that: loads do not rise above catalogue values:

– loads do not rise above catalog values and values of application design;
– transmission overhang is kept to a minimum;
– drive-chains should not be tensioned (if necessary – alternating loads and/or motion – foresee suitable chain tighteners); if the peripheral speed of the chain is greater than 1 m/s it is necessary to install proper malfunction markers such as aligning sensors, etc.;
– in the gear transmission there is an adequate gear mesh (≈ 0,03 ÷ 0,04 · m) between pinion and rack (bushing);
– drive-belts should not be over-tensioned.

Ex Use belts with bleeder resistance to mass < 10^9 Ω.

For splined couplings apply adequate products against oxydation.

5.12 - Backstop device

The presence on gear reducer of backstop device is stated by the **arrow** near the low speed shaft, **indicating the free rotation.**

Provide a protection system where a backstop device breaking could cause personal injury or property damage.

Before starting, **make sure that the direction of rotation in machine, gear reducer and motor all correspond correctly.**

Ex **Attention! One or more starting in the false direction, even if short, could irremediably damage the backstop device, the coupling seats and/or the electric motor; they could also cause the overheating of the backstop device over the temperature limit of 135 °C and the generation of mechanical sparks.**

5.13 - Verification of service factor *fs* required by the application

Service factor *fs* takes into account the different running conditions which must be referred to when performing calculations (ATEX) of gear reducer verification.

The **minimum service factor required** by the application is given by the following ratio:

$$\boldsymbol{fs}\ \text{required} \geqslant \boldsymbol{fs}_1 \cdot \boldsymbol{fs}_2 \cdot \boldsymbol{fs}_3 \cdot \boldsymbol{fs}_4 \cdot \boldsymbol{fs}_5 \cdot \boldsymbol{fs}_{ATEX}$$

or in case of selection $\boldsymbol{n}_2 \cdot \boldsymbol{L}_h$:

$$\boldsymbol{fs}\ \text{required} \geqslant \boldsymbol{fs}_1\ (8h/d) \cdot \boldsymbol{fs}_2 \cdot \boldsymbol{fs}_3 \cdot \boldsymbol{fs}_4 \cdot \boldsymbol{fs}_{ATEX}$$

The value of ***fs*** required thus determined **must not be lower than 1** (or **0,85** for A (A04) series).

Details and considerations about service factor.

The values of fs_1 ... fs_5 stated in the tables 5.13.1 ... 5.13.6 are valid for:

– maximum time on overload 15 s, on starting 3 s; if over and/or subject to heavy shock effect, consult us;
– a whole number of overload cycles (or start) **imprecisely** completed in 1, 2, 3 or 4 revolutions of low speed shaft; if **precisely** a continuous overload should be assumed.

Motors having a starting torque not exceeding nominal values (star-delta starting, particular types of motor operating on direct current, and single-phase motors), and particular types of coupling between gear reducer and motor, and gear reducer and driven machine (flexible, centrifugal, fluid and safety couplings, clutches and belt drives) affect service factor favourably, allowing its reduction in certain heavy-duty applications; consult us if need be.

Table 5.13.1 - Service factor fs_1 based on the **nature of load** [1] and **running time**

Nature of load of driven machine [1]		fs_1				
Ref.	Description	Running time [h]				
	A (**A04**) Series	**3 150** h 2 h/d	**6 300** h 4 h/d	**12 500** h 8 h/d	**25 000** h 12 h/d	**50 000** h 24 h/d
a	**Uniform**	0.67	0.85	**1**	1.25	1.6
b	**Moderate overloads** (1,6 times the normal load)	0.85	1.06	1.25	1.6	2
c	**Heavy overloads** (2,5 times the normal load)	1	1.25	1.5	1.9	2.36
	E (**E04**) Series	**3 150** h ⩽ 2 h/d	**6 300** h 2÷4 h/d	**12 500** h 4÷8 h/d	**25 000** h 8÷16 h/d	**50 000** h 16÷24 h/d
a	**Uniform**	0.8	0.9	**1**	1.18	1.32
b	**Moderate overloads** (1,6 times the normal load)	1	1.12	1.25	1.5	1.7
c	**Heavy overloads** (2,5 times the normal load)	1.32	1.5	1.7	2	2.24
	G[2] series	**2** h/d	**4** h/d	**8** h/d[2]	**16** h/d	**24** h/d
a	**Uniform**	0,8[3]	0,9[3]	**1**	1.18	1.32
b	**Moderate overloads** (1,6 times the normal load)	1	1.12	1.25	1.5	1.7
c	**Heavy overloads** (2,5 times the normal load)	1.32	1.5	1.7	2	2.24
	H (**H02**) Series	**2** h/d	**4** h/d	**8** h/d	**16** h/d	**24** h/d
a	**Uniform**	1	1	**1**	1.18	1.32
b	**Moderate overloads** (1,6 times the normal load)	1.12	1.18	1.25	1.5	1.7
c	**Heavy overloads** (2,5 times the normal load)	1.4	1.5	1.7	2	2.24

See notes at page 23.

Table 5.13.2 - Service factor fs_2 based on **nature of load** and of **frequency of starting**

Ref.	Nature of load of driven machine [1] Description	fs_2 Frequency of starting z [starts/h]							
	A (**A04**) Series	**4**	**8**	**16**	**32**	**64**	**125**	**250**	**500**
	E (**E04**)**, G** Series	**2**	**4**	**8**	**16**	**32**	**64**	**125**	**250**
	H (**H02**) Series	**1**	**2**	**4**	**8**	**16**	**32**	**–**	**–**
a	**Uniform**	1	1.06	1.12	1.18	1.25	1.32	1.4	1.5
b	**Moderate overloads** (1,6 times the normal load)	1	1	1.06	1.12	1.18	1.25	1.32	1.4
c	**Heavy overloads** (2,5 times the normal load)	1	1	1	1.06	1.12	1.18	1.25	1.32

Table 5.13.3 - Service factor fs_3 based on **motor type**

Motor type Description		fs_3
Electric three-phase motor	$P_1 \leqslant 9{,}2$ kW	1
	$P_2 > 9{,}2$ kW	1,06[4]
Electric three-phase brake motor		1.06
Internal combustion	multi-cylinder	1.25
	single-cylinder	1.5

Table 5.13.4 - Service factor fs_4 based on **reliability level**

Reliability level [5]	fs_4
Standard	1
Average	1.25
High	1.4

Table 5.13.5 - Service factor fs_5 based on **output angular speed** n_2

Output speed n_2 [min^{-1}]	fs_5 **G** series	**H** (**H02**) series
560 ÷ 355	1.25	–
355 ÷ 224	1.18	–
224 ÷ 140	1.12	1.18
140 ÷ 90	1.06	1.12
90 ÷ 56	1	1.06
< **56**	1	1

Table 5.13.6 - Service factor fs_{ATEX} according to **gear reducer ATEX design**

Gear reducer design	fs_{ATEX} **A** (**A04**), **E** (**E04**), **G, H02** series	**H** series
2GD	**118**	**1.32**
3GD	**1.06**	**1.18**

1) For indication on the type of load of the driven machine according to the application, see Rossi technical catalogs.
2) In case of selection with $n_2 \cdot L_h$ esclusively use the column 8 h/d.
3) Verify that the torque M_2 is lower than or equal to M_{N2} valid for $n_1 \leqslant 90$ min^{-1} (s. Rossi technical catalogs); in presence of variable load, verify for each interval of load cycle.
4) For Y-Δ starting, running with inverter or with «soft start» devices, $fs_3 = 1$.
5) Reliability degrees higher than normal are required in presence of very difficult maintenance, great importance of gear reducer in the production cycle, safety,etc.

5.14 - Thermal power verification *P*t [kW] of gear reducer

The nominal thermal power $\boldsymbol{Pt}_N$ of gear reducer, stated in the following tables, is that which can be applied at the gear reducer input, without exceeding 95 °C[1] approximately oil temperature when operating in following running conditions:

- **input speed** $\boldsymbol{n}_1$ = **1 400** min^{-1};
- **mounting position B3**;
- **continuous duty S1**;
- **maximum ambient temperature 40** °C;
- **maximum altitude 1 000** above sea level;
- **air speed** ⩾ **1,25** m/s (typical value in presence of a gearmotor with self-cooled motor);
- **maximum relative humidity 80** %.

Always verify that the power applied ***P*** is lower than or equal to gear reducer thermal power Pt_N,: table 5.14.1a, table 5.14.1b) multiplied by corrective coefficients $\boldsymbol{ft}_1$, $\boldsymbol{ft}_2$, $\boldsymbol{ft}_3$, $\boldsymbol{ft}_4$, $\boldsymbol{ft}_5$,$\boldsymbol{ft}_{ATEX}$ (stated in the tables 5.14.2 ... 5.14.7) considering the different operating conditions:

$$\boldsymbol{P}_1 \leqslant \boldsymbol{ft}_1 \cdot \boldsymbol{ft}_2 \cdot \boldsymbol{ft}_3 \cdot \boldsymbol{ft}_4 \cdot \boldsymbol{ft}_5 \cdot \boldsymbol{ft}_{ATEX}$$

When thermal power is not stated in the tables, consider that the power has been already verified.

Table 5.14.1a - **Nominal thermal power** $\boldsymbol{Pt}_N$ (series **E** (**E04**), **G**, **H** (**H02**))

Train of gears	$\boldsymbol{Pt}_N$ [kW]														
E (**E04**) Series	**80**, **81**			**100**, **101**		**125**, **126**			**140**		**160**			**180**	
2I	15			22.4		33.5			35.5		53			56	
3I	11,2			17		25			26.5		40			42.5	
G Series	**40**	**50**	**63** **64**	**80** **81**	**100**	**125**	**140**	**160**	**180**	**200**	**225**	**250**	**280**	**320** **321**	**360**
I	–	–	11.2	17	25	37.5	50	56	80	90	125	140	200	224	315
2I	3.35	5	7.5	11.2	17	25	28	37.5	42.5	60	67	95	106	150	170
3I	2.5	3.75	5.6	8.5	12.5	19	21.2	28	31.5	45	50	71	80	112	125
4I	–	–	4.25	6.3	9.5	14	–	–	–	–	–	–	–	–	–
CI[2]	3	4.75	7.1	10.6	16	23.6	31.5	35.5	50	56	80	90	125	140	200
ICI[2]	2.12	3.15	4.75	7.1	10.6	16	18	23.6	26.5	37.5	–	–	–	–	–
C2I[2]	–	–	–	–	–	–	21.2	28	31.5	45	50	71	80	112	125
C3I[2]	–	2.36	3.55	5.3	8	11.8	–	–	–	–	–	–	–	–	–
H (**H02**) Series	**4000**, **4001** (**400**, **401**)			**4500**, **4501** (**450**, **451**)			**5000**, **5001** (**500**, **501**)			**5600**, **5601** (**560**, **561**)			**6300**, **6301** (**630**, **631**)		
2I	236			265			375			425			530		
3I	180			200			280			315			400		
4I	132			150			212			236			300		
CI[2]	224			315			–			–			–		
C2I[2]	180			200			280			315			400		
C3I[2]	132			150			212			236			300		

Notes of pages 24, 25.

1) Corresponding to an average temperature of the external housing surface of approximately 85 °C; locally housing temperature can achieve the oil temperature.
2) For **bevel helical** gear reducers and gearmotors with **double extension** high speed multiply $\boldsymbol{Pt}_N$ by **0,85**.
3) For speed n_x included between two stated values (n_{sup}, n_{inf}), select the nearest lower value or interpolate:
$Pt_{N\,@\,nx} = (Pt_{N\,@\,nsup} - Pt_{N\,@\,ninf}) \cdot (n_x - n_{inf}) / (n_{sup} - n_{inf}) + Pt_{N\,@\,ninf}$
4) For $n_{Worm} \leqslant 90\ min^{-1}$, consult us.

Table 5.14.1b - **Nominal thermal power Pt_N A (A04)** series

n_{worm} [3]	u_{worm}																			
min^{-1}	**7**	**10**	**13**	**16**	**20**	**25**	**32**	**40**	**50**	**63**	**7**	**10**	**13**	**16**	**20**	**25**	**32**	**40**	**50**	**63**
	Size 32										**Size 40**									
1 400	0.82	0.67	-	-	0.44	-	-	-	-	-	1.14	0.93	0.84	0.77	0.6	0.55	0.49	-	-	-
1 120	-	0.61	-	-	0.4	-	-	-	-	-	1.04	0.84	0.76	0.69	0.55	0.49	0.45	-	-	-
900	-	-	-	-	-	-	-	-	-	-	0.94	0.76	0.7	0.64	0.5	0.46	-	-	-	-
710	-	-	-	-	-	-	-	-	-	-	0.87	0.7	0.63	0.58	0.45	0.41	-	-	-	-
560	-	-	-	-	-	-	-	-	-	-	0.8	0.64	-	-	0.41	-	-	-	-	-
450	-	-	-	-	-	-	-	-	-	-	-	-	-	-	0.38	-	-	-	-	-
	Size 50										**Sizes 63, 64**									
1 400	1.72	1.4	1.29	1.18	0.92	0.84	0.76	0.68	-	-	2.73	2.34	1.97	1.81	1.67	1.3	1.17	1.08	0.96	-
1 120	1.58	1.28	1.16	1.06	0.83	0.76	0.68	0.62	-	-	2.49	2.13	1.79	1.64	1.5	1.17	1.06	0.97	-	-
900	1.43	1.16	1.05	0.96	0.75	0.69	0.63	-	-	-	2.28	1.93	1.62	1.48	1.37	1.06	0.95	0.88	-	-
710	1.31	1.05	0.96	0.88	0.69	0.63	0.57	-	-	-	2.07	1.75	1.46	1.34	1.24	0.96	0.87	-	-	-
560	1.2	0.96	0.88	0.81	0.63	0.58	-	-	-	-	1.9	1.61	1.34	1.23	-	0.88	0.8	-	-	-
450	1.1	0.89	0.82	0.75	0.58	0.54	-	-	-	-	1.76	1.48	1.24	1.14	-	0.82	-	-	-	-
355	1.01	0.81	-	-	0.53	-	-	-	-	-	1.62	1.37	1.13	1.04	-	0.74	-	-	-	-
280	-	-	-	-	0.5	-	-	-	-	-	1.51	1.27	1.06	-	-	-	-	-	-	-
	Sizes 80, 81										**Size 100**									
1 400	4.15	3.59	3.04	2.82	2.58	2.1	1.83	1.66	1.49	1.32	-	9.8	8.5	7.8	7.2	5.7	5.1	-	-	-
1 120	3.82	3.28	2.76	2.54	2.34	1.82	1.65	1.5	1.35	-	-	8.5	7.3	6.6	6.2	4.84	4.32	-	-	-
900	3.51	2.99	2.51	2.31	2.11	1.65	1.49	1.36	1.23	-	-	7.2	6.2	5.6	5.3	4.12	3.67	3.4	-	-
710	3.17	2.7	2.27	2.09	1.91	1.49	1.35	1.23	1.11	-	-	6.2	5.3	4.8	4.45	3.5	3.11	2.87	-	-
560	2.89	2.46	2.06	1.89	1.75	1.36	1.22	1.13	-	-	-	5.3	4.49	4.08	3.79	2.97	2.64	2.44	-	-
450	2.67	2.28	1.9	1.75	1.61	1.24	1.13	1.05	-	-	-	4.59	3.9	3.54	3.3	2.56	2.3	-	-	-
355	2.47	2.09	1.73	1.6	1.49	1.14	1.04	-	-	-	-	4.02	3.41	3.09	2.89	2.24	2.01	-	-	-
280	2.31	1.94	1.61	1.49	-	1.06	0.96	-	-	-	-	3.55	3.01	2.76	2.57	1.99	1.79	-	-	-
224	2.11	1.8	1.5	-	-	0.99	-	-	-	-	-	3.18	2.69	2.44	-	1.78	1.59	-	-	-
180	1.98	1.69	1.4	-	-	-	-	-	-	-	-	2.88	2.42	2.21	-	1.6	-	-	-	-
140	1.8	-	-	-	-	-	-	-	-	-	-	2.52	2.12	-	-	1.4	-	-	-	-
112	-	-	-	-	-	-	-	-	-	-	-	2.25	1.9	-	-	-	-	-	-	-
	Sizes 125, 126										**Sizes 160, 161**									
1 400	-	15.2	14	12.2	11.2	10.4	8	7.1	6.6	5.9	-	23.4	21.8	18.9	17.4	16.1	12.5	11.4	10.3	9.3
1 120	-	13.1	11.9	10.3	9.5	8.8	6.7	6	5.6	-	-	20.2	18.9	16.3	14.9	13.8	10.8	9.7	8.7	7.8
900	-	11.3	10.2	8.9	8.1	7.5	5.8	5.1	4.76	-	-	17.4	16.1	13.9	12.7	11.8	9.1	8.3	7.5	6.7
710	-	9.6	8.7	7.5	6.9	6.4	4.89	4.36	4.03	-	-	15	13.8	11.8	10.8	10	7.7	7	6.3	5.7
560	-	8.3	7.4	6.4	5.8	5.4	4.17	3.7	3.44	-	-	12.8	11.8	10.1	9.2	8.5	6.6	6	5.4	4.82
450	-	7.2	6.4	5.6	5.1	4.7	3.6	3.21	2.99	-	-	11.1	10.2	8.7	8	7.4	5.7	5.1	4.67	4.17
355	-	6.2	5.6	4.81	4.4	4.11	3.12	2.81	-	-	-	9.6	8.8	7.5	6.9	6.4	4.81	4.44	4.05	3.65
280	-	5.5	4.99	4.27	3.92	3.64	2.77	2.49	-	-	-	8.5	7.8	6.7	6.1	5.6	4.32	3.94	3.6	-
224	-	4.91	4.46	3.81	3.49	3.24	2.48	2.23	-	-	-	7.6	7	5.9	5.4	5	3.86	3.51	3.23	-
180	-	4.42	3.98	3.4	3.11	-	2.21	2.01	-	-	-	6.9	6.3	5.4	4.86	4.49	3.48	3.16	2.89	-
140	-	3.9	3.51	3.01	2.75	-	1.97	-	-	-	-	6	5.5	4.63	4.26	-	3.02	2.78	2.32	-
112	-	3.48	3.14	2.68	-	-	1.75	-	-	-	-	5.4	4.92	4.16	3.81	-	2.71	2.5	-	-
90 [4]	-	3.14	2.85	-	-	-	-	-	-	-	-	4.81	4.42	3.74	3.43	-	2.46	2.25	-	-
	Size 200										**Size 250**									
1 400	-	-	33.1	31.3	27	25.1	19.4	17.7	16.2	14.5	-	-	-	48.5	41.2	39.4	35.5	27.3	25.7	23.2
1 120	-	-	28.6	26.9	23.2	21.5	16.7	15	13.9	12.3	-	-	-	42.2	36	34	30.2	23.8	22.1	19.7
900	-	-	24.7	23.1	20	18.3	14.5	12.8	11.7	10.5	-	-	-	36.8	31	29.6	25.9	20.4	18.9	16.8
710	-	-	21.2	19.9	17	15.7	12.2	10.9	10	8.9	-	-	-	31.2	26.4	25	22.2	17.3	16	14.4
560	-	-	18.2	17	14.5	13.4	10.4	9.3	8.5	7.6	-	-	-	26.9	22.8	21.4	18.8	14.9	13.6	12.2
450	-	-	15.8	14.7	12.6	11.6	9	8	7.3	6.5	-	-	-	23.4	19.7	18.6	16.3	12.8	11.8	10.6
355	-	-	13.7	12.7	10.8	10	7.7	6.9	6.3	5.7	-	-	-	20.2	17	15.9	14	11	10.1	9.1
280	-	-	12	11.2	9.5	8.8	6.8	6.1	5.6	-	-	-	-	17.7	14.9	14	12.3	9.6	8.9	8
224	-	-	10.7	10	8.5	7.8	6	5.4	5	-	-	-	-	15.8	13.1	12.4	11	8.5	7.9	7.2
180	-	-	9.6	9	7.6	7	5.4	4.85	4.52	-	-	-	-	14.2	11.8	11.1	9.8	7.7	7.1	6.4
140	-	-	8.4	7.8	6.6	6.1	4.74	4.25	3.93	-	-	-	-	12.5	10.3	9.8	-	6.7	6.2	-
112	-	-	7.5	7.1	5.9	5.5	4.17	3.83	-	-	-	-	-	11	9.1	8.6	-	5.9	5.6	-
90 [4]	-	-	6.8	6.3	5.3	4.93	3.79	3.46	-	-	-	-	-	9.9	8.3	7.8	-	5.4	5	-

See notes on page 24.

Table 5.14.2 - Thermal factor ft_1 according to **cooling system** and **input speed** n_1

Cooling system		ft_1 input speed $n_1 \geqslant$ 710	900	1 120	1 400
Natural convection		1			
Forced cooling[1] (**G**, **H** (**H02**) series)	with 1 radial fan (helical gear units)	1.12	1.18	1.25	1.32
	with 2 radial fans (helical gear units) with 1 radial fan (bevel helical gear units)	1.25	1.4	1.6	1,8[3]
With water coil (**G**, **H** (**H02**) series)		2			
with internal heat exchanger (**G** series)		see ch. 8.2			

Table 5.14.3 - Thermal factor ft_2 according to **ambient temperature** and **service**

Maximum ambient temperature °C	ft_2 Continuous duty **S1**	Intermittent load duty **S3 ... S6** Cyclic duration factor [%] for 60 min running [3] **60**	**40**	**25**	**15**
40	1	1.18	1.32	1.5	1.7
30	1.18	1.4	1.6	1.8	2
20	1.32	1.6	1.8	2	2.24
10	1.5	1.8	2	2.24	2.5

Table 5.14.5 - Thermal factor ft_4 according to **altitude of installation**

Altitude a.s.l. m	ft_4
0 ÷ 1 000	1
1000 ÷ 2 000	0.95
2000 ÷ 3 000	0.9
3000 ÷ 4 000	0.85

Table 5.14.6 - Thermal factor ft_5 according to cooling **air speed** on gear reducer housing

Air speed m/s	Installation environment	ft_5
< 0.63	very small environment or without air movements or with protected gear reducer	consult us
0.63	small environment and with limited air movements	0.71
1	wide environment without air movements	0.9
1.25	wide environment with light air movements (e.g. gearmotor with self-cooled motor)	1
2.5	open and cooled	1.18
4	with heavy air movements	1.32

Table 5.14.7 - Thermal factor ft_{ATEX} according to **ATEX gear reducer design**

Series	**2GD**	**3GD**
A (**A04**), **E** (**E04**), **G, H** (**H02**)	**0.8** (0,71 for train of gears I and CI)	**0.9** (0,8 for train of gears I and CI)

Notes of pages 26, 27.

- Position of the reference groove (see ch. 11.7).

1) With simultaneous water cooling by **coil**, values are multiplied by **1,8**.
2) Value also valid for electric fan (installed by the Buyer).
3) Duration of running on load × 100 / 60 [%].
4) For MR 2I, ft_3 = 1.

Table 5.14.4 - Thermal factor ft_3 according to **mounting position where ft_3 = 1 is not specified**

Train of gears	Mounting position		ft_3									
A (**A04**) series			**Size**									
			32	**40**	**50**	**63 64**	**80 81**	**100**	**125 126**	**160**	**200**	**250**
R V MR V	**B6, B7**		0,9									
E (**E04**) series			**Size**									
			50, 51	**63, 64**	**80, 81**	**100, 101**	**125, 126**	**140**	**160**	**180**		
R 2I MR 2I	**V5**	$i_N \leqslant 10$	1	1	1	1	1	1	0,85	0,85		
MR 2I MR 3I	**V6**		0,85	0,85	0,85	0,85	0,85	0,85	0,85	0,85		
G series			**Size**									
			140	**160**	**180**	**200**	**225**	**250**	**280**	**320, 321**	**360**	
R I	**B6**		1	0,71	0,71	0,71	0,71	0,71	0,71	0,71	0,71	
	B7		0,85	0,85	0,85	0,85	0,85	0,85	0,85	0,85	0,85	
	B8		0,85	1	0,85	1	0,85	1	0,85	1	0,85	
R 2I MR 2I	**B6**	$i_N \leqslant 14$	1	1	1	0,85	0,85	0,85	0,85	0,85	0,85	
		$i_N \geqslant 16$	1	1	1	1	1	1	1	0,85	0,85	
	B7	$i_N \leqslant 14$	1	0,71	0,71	0,71	0,71	0,71	0,71	0,71	0,71	
		$i_N \geqslant 16$	1	1	1	1	1	0,71	0,71	0,71	0,71	
	V5	$i_N \leqslant 14$	1	1	1	0,71	0,71	0,71	0,71	0,71	0,71	
		$i_N \geqslant 16$	1	1	1	1	1	1	1	0,71	0,71	
	V6	$i_N \leqslant 14$	1	1	1	1	1	1	1	0,85[4)]	0,85[4)]	
R 3I MR 3I	**B6**	$i_N \leqslant 63$	1	1	1	1	1	0,85	0,85	0,85	0,85	
	B7	$i_N \leqslant 63$	1	1	1	0,71	0,71	0,71	0,71	0,71	0,71	
		$i_N \geqslant 71$	1	1	1	1	1	1	1	0,71	0,71	
	V5	$i_N \leqslant 63$	1	1	1	1	1	1	1	0,71	0,71	
	V6	$i_N \leqslant 63$	1	1	1	1	1	0,85	0,85	0,85	0,85	
R CI	**B6**	$i_N \leqslant 8$	1	1	1	1	1	0,85	0,85	0,85	0,85	
	B7		1	0,71	0,71	0,71	0,71	0,71	0,71	0,71	0,71	
	B8		0,85	1	0,85	1	0,85	1	0,85	1	0,85	
	V5, V6	• below $i_N \leqslant 8$	1	1	1	1	1	0,85	0,85	0,85	0,85	
		• above	1	0,71	0,71	0,71	0,71	0,71	0,71	0,71	0,71	
MR CI	**B7**		1	1	1	1	1	0,85	0,85	-	-	
	B8		0,85	1	0,85	1	0,85	1	0,85	-	-	
	V5, V6	• above	1	1	1	1	1	0,85	0,85	-	-	
R C2I	**B6**	$i_N \leqslant 28$	1	1	1	1	1	1	1	0,85	0,85	
	B7		1	1	1	0,71	0,71	0,71	0,71	0,71	0,71	
	V5, V6	• below	1	1	1	0,71	0,71	0,71	0,71	0,71	0,71	
		• above	1	1	1	1	1	1	1	0,85	0,85	
MR C2I	**B7**		1	1	1	1	1	1	1	0,85	0,85	
H (**H02**) series			**Size**									
			4000, 4001 (400, 401)	**4500, 4501 (450, 451)**	**5000, 5001 (500, 501)**	**5600, 5601 (560, 561)**	**6300, 6301 (630, 631)**					
R 2I R 3I R 4I	**B6, V6**		0,9	0,9	0,9	0,9	0,9					
	B7, V5		0,8	0,8	0,8	0,8	0,8					
R CI	**B6**		0,85	0,85	–	–	–					
	B7		0,71	0,71	–	–	–					
	V5, V6	**upper** bevel wheel position	0,85	0,85	–	–	–					
		lower bevel wheel position	0,71	0,71								
R C2I R C3I	**B6**		0,9	0,9	0,9	0,9	0,9					
	B7		0,8	0,8	0,8	0,8	0,8					
	V5, V6	**upper** bevel wheel position	0,9	0,9	0,9	0,9	0,9					
		lower bevel wheel position	0,8	0,8	0,8	0,8	0,8					

See notes at page 26.

6 - Lubrication

6.1 - General

Gear reducers and gearmotors must be lubricated with **polyglycol or polyalphaolephines based synthetic oil** depending on the series; they are supplied **FILLED WITH OIL OR WITHOUT OIL** according to type and size (see ch. 6.2). **When supplying WITHOUT OIL, the filling up to specified level is Buyer's responsibility and has to be carried out with gear reducer at rest**; usually the level is stated by means of transparent level plug (see ch. 13 ... 16 or eventual SPT scheme attached to present instructions). Every gear reducer is equipped with **lubrication name plate**.

Concerning lubricant type, how supplied status of gear reducers, plugs, filling instructions, oil-change interval, etc. see table 6.2.

Make sure that for gear reducers and gearmotors size ⩾ 100, the filler plug is metallic and equipped with filter and valve (symbol ; see fig. 6.1.1). When these gear reducers are required filled with oil (non-standard design) the **filler plug** is not mounted but **supplied separately**; the responsible for installation will take care of the right assembly (see ch. 13 ... 16 or eventual scheme SPT attached) replacing a closed plug.

When the gear reducer or gearmotor is supplied with **transparent level plug** (size ⩾ 100), the lubricant quantity to be filled is the one that allows **to reach the level** specified **by the proper transparent plug at gear reducer rest** and not the one stated on the catalog.

When gear reducer or gearmotor is provided with a **level plug with rod** (see fig. 6.1.2), fill with oil up to specified level on rod.

When gear reducer or gearmotor is provided with **a plug for flowing over level** (red colour, see fig. 6.1.3) fill after unscrewing a.m. plug in order to check the obtained level by oil outlet.

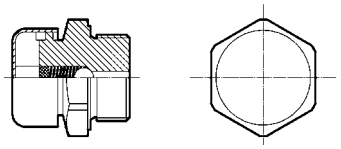

Fig. 6.1.1
Filler plug with filter and valve

2I, 3I, 4I (100, 125), m.p. **V6**
3I (125), m.p. **V5**[1)]

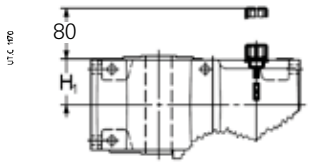

Fig. 6.1.2
Level plug with dipstick

ICI (100, 200), m.p. **B6**[1)] **C3I (100, 125),** m.p. **B6**[1)]

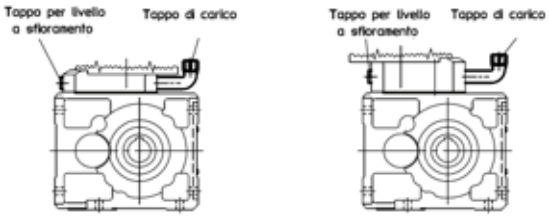

Fig. 6.1.3
Plug for flowing over level

1) For high speed continuous duty an expansion tank is envisaged: consult us.

Usually bearings are automatically and continuously lubricated (bathed, splashed, through pipes or by a pump) utilising the main gear reducer lubricant. The same applies for backstop devices, when fitted to gear reducers.

In certain gear reducers in vertical mounting positions V5 and V6, and bevel helical gear reducers in horizontal positions B3, B6 (though not gearmotors in this case, for which the above indications hold good) upper bearings are independently lubricated with a special grease «for life», assuming pollution-free surroundings. The same applies for motor bearings (except some cases in which relubrication device is adopted) and backstop devices when fitted to motors.

Always be sure that the gear reducer is located as per the mounting position ordered - including the inclined mounting positions (e.g. B3 38° V5), which appears on the name plate (see ch. 3.2). In case of **pivoted mounting positions** the gear reducers are equipped with a supplementary nameplate stating the mounting position, the oil filling and level check during maintenance operations.

For mounting positions, oil quantity and plug position see ch. 13 ... 16.

6.2 - Lubrication table

Tab. 6.2a - **How supplied and plugs** (identification through specific lubrication nameplate)

Size ⩽ 81			**Size ⩾ 100**		
A (**A04**)	**E** (**E04**)	**G**	**A** (**A04**)	**E** (**E04**)	**G, H** (**H02**)
FILLED WITH SYNTHETIC OIL (polyglycol based)			**WITHOUT OIL** (except different statement on lubrication name plate)		
AGIP Blasia S **320** KLÜBER Klübersynth GH 6-**320** MOBIL Glygoyle **320** SHELL Omala S4 WE **320** Con **velocità vite ⩽ 280** min^{-1} KLÜBER Klübersynth GH 6-**680** MOBIL Glygoyle **680** SHELL Omala S4 WE **680**	AGIP Blasia S **220** KLÜBER Klübersynth GH 6-**220** MOBIL Glygoyle **220** SHELL Omala S4 WE **220**				
1 filler plug for size ⩽ 64 **2 filler/drain plugs for sizes 80, 81**			**Filler plug with filter, valve, drain and level plug**		

Tab. 6.2b - **Standard for the eventual first filling** (size ⩾ 100).

Before commissioning, **fill to specified level with synthetic oil having the following ISO viscosity degree and features:**.

A (**A04**)	**E** (**E04**), **G, H** (**H02**)
POLYGLYCOL BASED **SYNTHETIC** OIL **(PAG)** AGIP Blasia S KLÜBER Klübersynth GH6 MOBIL Glygoyle SHELL Omala S4 WE	**POLYALPHAOLEPHINE** BASED **SYNTHETIC** OIL **(PAO)** AGIP Blasia SX KLÜBER Klübersynth GEM4 / EG4 MOBIL SHC Gear SHELL Omala S4 GXV / S4 GX

ISO viscosity grade [cSt]

Worm speed min^{-1}	Ambient temperature 0 ÷ 40 °C[1] Gear reducer size				
	100	**125 ... 161**		**200, 250**	
		B3, V5, V6	**B6, B7, B8**	**B3, V5, V6**	**B6, B7, B8**
1 500 ÷ 710[2]	320	320		320	220
710 ÷ 355[2]	460	460		460	320
355 ÷ 180[2]	680	680	460	460	
< 180	680	680		680	

1) Peaks of 10 °C below (20 °C for ⩽ 460 cSt) the ambient temperature range are acceptable.
2) For this speed we advise to replace oil after running.

ISO viscosity grade [cSt]

Speed n_2 min^{-1}	Ambient temperature	
	-20 ÷ 0 °C[2]	0 ÷ 40 °C[1]
> 224	150	150
224 ÷ 22,4	150	220
22,4 ÷ 5,6[1]	220	320
< 5,6	320	460

1) Peaks of 20 °C below and 10 °C above the ambient temperature range are acceptable.
2) Permissible temperature range, without heaters, only for H (H02) series.

Tab. 6.2c - **Lubrication interval** (size ⩾ 100)

Sizes ⩽ 81 are **lubricated for life**, assuming pollution-free environment.

An overall guide to oil-change interval is given in the table, and assumes pollution-free surroundings.

Where heavy overloads are present, halve the values.

Apart from running hours replace or regenerate synthetic oil at least each 5 years.

Oil temperature °C	Oil change lubrication h	
	A (A04)	E (E04), G, H (H02)
⩽ 65	9 000	12 500
65 ÷ 80	6 300	9 000
80 ÷ 95	4 500	6 300

The oil quantity is given by the level stated by the proper plug or an equivalent system (plug for flowing over level, plug with dipstick).

Grease-lubricated bearings:

Lubrication is «for life» assuming uniform load and pollution-free environment. Replace the grease every year with running up to 12 h/d and every 6 months with running of 12 ÷ 24 h/d; in these occasions re-lubricate the **backstop device** with grease SHELL Alvania RL2. Bearing should be filled with SHELL Gadus S2 V100 bearing-grease for ball bearings, KLÜBER STABURAGS NBU 8 EP for roller bearings.

Attention! For bearings requiring greasing, follow the instructions and refer to ch. 13 ... 15 and consult Rossi in case of doubt.

Combined gear reducers. Lubrication remains independent, thus data relative to each single gear reducer hold good.

6.3 - Lubrication of extruder support (helical and bevel helical, sizes 100 ... 4501)

The lubrication of extruder support, supplied **WITHOUT OIL** like the gear reducer, is oil bathed and can be joint or separate compared with the gear reducer's one.

Separate lubrication[1)]

The gear reducer must be filled with lubricant with ISO viscosity degree stated in table 6.3, whereas the **extruder support** – equipped with metallic plug with filter and valve, drain and level – must be filled with **polyalfaolefines basis synthetic oil** with viscosity degree ISO **320 cSt** (AGIP Blasia SX, MOBIL SHC Gear, KLÜBER Klübersynth GEM4, ARAL Degol PAS, BP Enersyn EPX, SHELL Omala S4 WE; see quantities at ch. 8) and up to **level** specified on the **extruder support**.

Common/Joint lubrication[2)]

The **gear reducer** and the **support** must be filled with the same **polialfaolefines basis synthetic oil**, with iSO viscosity degree stated in table 6.3 and up to **level** stated on the **gear reducer**. For mounting position B6, during the filling, remove the upper plug positioned on the extruder support in order to facilitate the air flow from inside. In this circumstance, cause of the elimination of potential residual air, an oil filling up to level could be necessary.

Gear red. size	Approximate oil quantity extruder support l
140, 160	0,8
180	1,1
200	1,5
225	2,5
250, 280	4
320 ... 360	9,1
4000, 4001 (400, 401)	20
4500, 4501 (450, 451)	16

1) The inner part of gear reducer is separated from the extruder support through a seal ring.
2) The inner part of gear reducer is connected with the extruder support; the common lubrication is present on gear reducer and gearmotors 2l sizes 100 ... 360 or in presence of independent cooling unit when it is used both for gear reducer and extruder support.

7 - Motor assembly and disassembly

7.1 - General

Attention. Verify that motor:

- **respects the application limits** (***P***$_{1max}$, ***n***$_{1max}$, **etc.**) **stated on nameplate of gear reducer on which it is mounted** (gearmotor without motor),
- **it has ATEX protection specifications equal to or higher than the gear reducer ones on which it is mounted** (gearmotor without motor)
- **it is complying with the minimum safety requirements of the use area** (see table 5.1).

As all gearmotors are fitted with **standardized** motor, the mounting or replacement of motor is user-friendly. Simply observe the following instructions (after having observed the safety instructions relevant to machine, see maintenance procedure of ch. 11.1:

- be sure that the mating surfaces are machined under accuracy rating (IEC 60072-1);
- clean surfaces to be fitted, thoroughly. If painted, remove paint;
- in the event of a lowered keyway, replace the motor key with the one supplied with the gear reducer; if necessary, check the key so that between its top and the bottom of the hole keyway there is a backlash of 0,1÷0,2 mm; in case of output shaft keyway, lock the key by pins;
- check that motor centering is in the relevant gear reducer flange seat;
- check that the length of the motor fastening screws to gear reducer flange is enough to have 2 × pitch over the nut;
- observe the appropriate tightening torque stated at ch. 5.2.

7.2 - Gearmotors with motor keyed onto hollow high speed shaft of gear reducer

Worm gearmotors MR V (A (A04) series)
Helical gearmotors MR 2I, **MR 3I sizes 40 ... 360** (G series)
Bevel gearmotors MR CI, **MR C2I** (G series)

- check that the fit-tolerance (push-fit) between hole and shaft end is G7/j6 for D ⩽ 28 mm, F7/k6 for D ⩾ 38 mm;
- apply a thread-braking seal type LOXEAL 23-18 the coupling surfaces to prevent contact oxydation;
- push the motor up to shoulder; **do not force the motor shaft inside the gear reducer: danger of severe injury;**
- tighten the motor fastening screws or nuts to gear reducer motor flange;

In presence of hub clamp (helical gearmotors 2I, 3I with motor size ⩾ 200) proceed as follows, for the **mounting**:

- Turn the **hub clamp** until the fastening screw head is aligned with one of the access holes on gear reducers flange, after having removed the relevant closure plugs;
- do not modify the axial position of the hub clamp supplied from workshop, as this position is the excellent one in order to achieve the maximum tightening effect;
- push the motor up to shoulder;
- tighten the motor fastening screws or nuts to gear reducer motor flange;
- tighten the hub clamp by dynamometric key up to the tightening torque specified in tab. 7.2.1; during this operation pay attention not to modify the axial position of hub clamp;
- screw again the closure plugs of access holes to gear reducer flange;

Table 7.2.1 - Tightening torque for hub clamp

Gear reducer size 2I	Gear reducer size 3I	Screw UNI 5931	*M*s N m
160 ... 225	**200 ... 280**	M12 × 45 cl. 12.9	143
250... 360	**320 ... 360**	M12 × 45 cl. 12.9 Ød ⩽ 75 M14 × 50 cl. 8.8 Ød = 80	143 135

For the **disassembly**, proceed as follows:

- acting on motor shaft rear end, whenever possible, or disconnecting the gear reducer from machine and acting on gear reducer low speed shaft (with brake motor the brake must be released), align the wrench hole with the tightening screw of hub clamp;
- loosen the tightening screw and consequently the hub clamp (taking care not to modify the axial position of hub clamp);
- unscrew the motor fastening screws of nuts to gear reducer flange;
- disassemble the motor.

7.3 - Gearmotors with helical pinion keyed directly on motor shaft end

Worm gearmotors MR IV, **MR 2IV** (A (A04) series)
Coaxial gearmotors MR 2I, **MR 3I** (E (E04) series)
Helical gearmotors MR 3I 40 ... 125, MR 4I (G series)
Bevel helical gearmotors MR ICI, **MR C3I** (G series)

– check that the fit-tolerance between hole and shaft end is K6/j6 for D ⩽ 28 mm, J6/k6 for D ⩾ 38 mm;
– make sure that the motors have bearing location and overhang (dimension S see fig. 7.3.1) as shown in table 7.3.1;
– assemble on motor shaft, as follows:
  a) the **spacer** pre-heated at **65 °C** sealing the motor shaft part with **locking adhesive type LOXEAL 58-14** and ensuring that keyway and motor shaft shoulder there is a ground helical section of at least 1,5 mm; pay attention **not to damage the external surface** of spacer;
  b) the key in the keyway, taking care that a brief segment of at least 0,9 times the pinion width;
  c)the pinion pre-heated at **80 ÷ 100 °C**;
  d) the **axial fastening system** where foreseen (head self-locking screw with base, spacer, or hub clamp with one or more dowels, fig. 7.3.1A); for the cases foreseen **without axial fastening** (fig. 7.3.1b), seal with **locking adhesive type LOXEAL 58-14** also the motor shaft section below the **pinion**;
– in the event of axial fastening system with hub clamp and dowels, be sure that these ones do not overhang from spacer external surface: screw the dowel and matrix the motor shaft with a tip;
– grease the pinion teeth, the sealing ring rotary seat and the seal ring (with KLÜBER Petamo GHY 133N), and assemble carefully, **paying attention not to damage the seal ring lip due to accidental shock with the pinion toothing**.

Table 7.3.1 - Minimum mechanical requirements for IEC motors

Motor size	Min dynamic load capacity N		Max dimension S[1] mm
	Drive end	Non-drive end	
63	4 500	3 350	16
71	6 300	4 750	18
80	9 000	6 700	20
90	13 200	10 000	22.5
100	20 000	15 000	25
112	25 000	19 000	28
132	35 500	26 500	33.5
160	47 500	33 500	37.5
180	63 000	45 000	40
200	80 000	56 000	45
225	100 000	71 000	47.5
250	125 000	90 000	53
280	160 000	112 000	56

1) Values advised in order to minimize sound levels. These values refer to the maximum power of motor size; proportionally they increase when the applied power decreases.
They can double accepting higher sound levels (3÷5 dB(A)). **These values do not affect the gearmotor compliance with ATEX directive.**

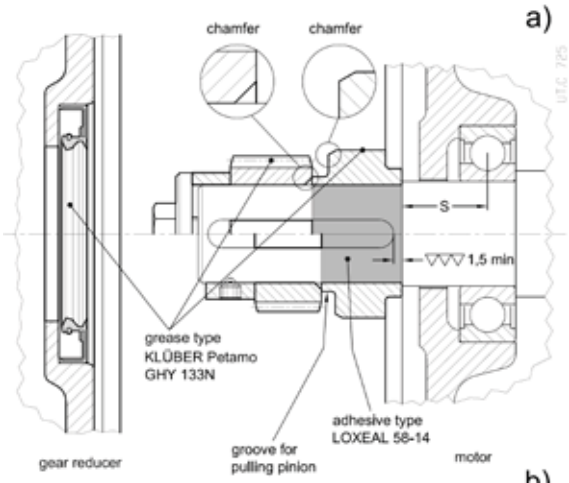

Fig. 7.3.1a

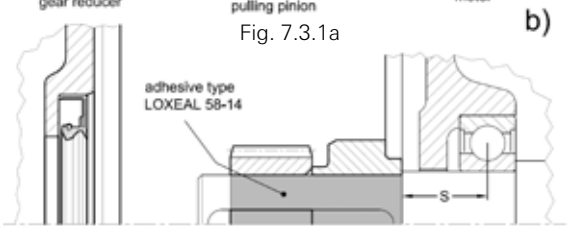

Fig. 7.3.1b

8 - Cooling systems

8.1 - Fan cooling

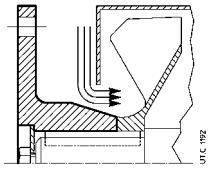

If there is a fan on the gear reducer verify that there is sufficient space allowing for adequate circulation of cooling air also after fitting coupling protection. If a coupling protection is fitted (drilled case or wire netting), smooth the coupling hub, if need be.

8.2 - Cooling by coil (G, H (H02) series) or with internal exchanger (G series)

The presence of coil or of internal exchanger is given by water inlets (pipes DIN 2353) protruding from the housing or from the inspection cover as follows.

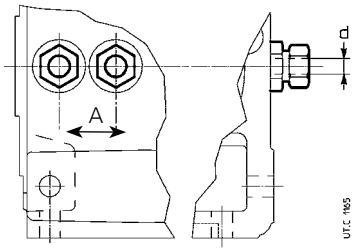

Table 8.2.1 - Coil

Gear reducer size	d Ø	A[1] ≈	B[1] ≈	h[1] ≈	O[1] ≈	spanner
125 ... 180	12	40	40	–	–	22
200 ... 280	12	50	40	–	–	22
320 ... 360	16	60	45	–	–	30
4000 ... 4501*	16	180	–	250	472	30
5000 ... 5601*	16	225	–	310	577	30
6300, 6301*	16	280	–	320	647	30

1) Values valid and referred to mounting position B3; consult us
* Values valid also for relevant H02 sizes.

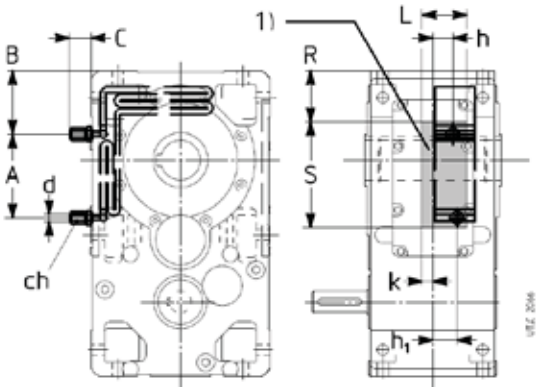

Table 8.2.2 - Internal heat exchanger

Gear reducer size	ft_{1b} B3	ft_{1b} B6, B7	ft_{1b} B8	A ≈	B ≈	C	ch	d Ø	h	h_1	K	L	R	S
140	1.7	1.9	1.8	30	81.5	54	22	12	32	19	16	68	60	130
160	2.12	2.36	2.24	0	102	54	22	12	20	46	16	86	77	177
180	2	2.24	2.12	0	102	54	22	12	21	47	15	86	77	177
200	2.24	2.5	2.36	190	152	25	22	12	41	41	14	75	105	263
225	2.12	2.36	2.12	190	152	25	22	12	41	41	14	75	105	263
250	2.36	2.65	2.5	180.5	170.5	25	22	12	50.5	50.5	18	100	125	311
280	2.24	2.5	2.36	180.5	170.5	25	22	12	54	54	15	100	125	311
320, 321	2.12	2.36	2.24	60	255	34	30	16	66	66	2	129	177	302
360	2	2.24	2.12	60	255	34	30	16	66	66	2	129	177	302

1) Free area for pipe fastening and coil fastening devices.

Attention! Do not tamper with the eventual stop plate in order to keep the pipes locked; in particular keep the pipe locked while tightening the nut of connection pipe.

Unless specific indications given on the documentation attached to present instructions, water fed into the system must:

– be not too hard;

– be at max temperature +20 °C;

– capacity 10 ÷ 20 dm^3/min;

– pressure 0,2 ÷ 0,4 MPa (2 ÷ 4 bar); the load loss of coil according to water capacity and pressure is 0,6 ÷ 0,8 bar for diameter d = 16 and 0,8 ÷ 1 for diameter d = 12.

Where ambient temperature may be less than 0 °C, make provision for water drain and compressed air inlet, so as to be able to empty out the coil completely and avoid freezing up (see ch. 11.3).

The direction of flow of the cooling water is discretionary.

The user must install a flow indicator or other device on the water delivery to ensure the gear reducer/gearmotor stops when the flow drops below the required rate; if the delivery water pressure is too high or there is a risk of this occurring, install a safety valve properly calibrated.

The instruments must be according to ATEX depending on the area of application and installed as close as possible to the gear reducer/ gearmotor.

The ends of the cooling coil protruding from the gear reducer must not be damaged (bent, dented, obstructed) as this can prejudice the correct flow of water for cooling or result in leaks. Before connecting the coil to the pipe fittings used for feeding and draining of the cooling water, first rinse to clear out any possible obstructions.

For the connection it is sufficient to use a smooth metallic tube having a **d** external diameter as per table.

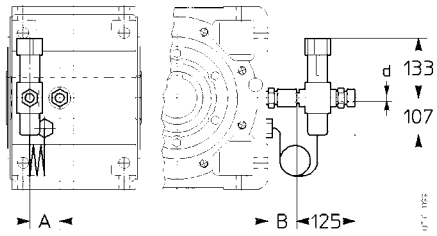

Thermostatic valve (G series)

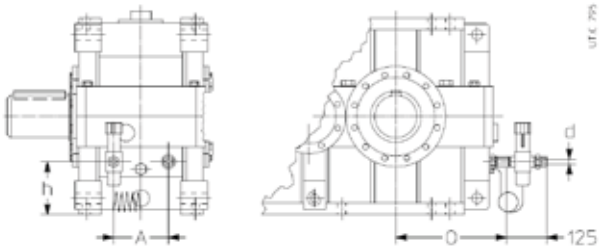

Thermostatic valve (H (H02) series)

The thermostatic valve permits to have water circulation automatically and without auxiliary supply need, when gear reducer oil reaches the set temperature. The valve sensor is equipped with immerson bulb. Mounting and setting, adjustable within +50 ÷ +90 °C, must be mounted during the assembly. For the setting use the control knob on valve head.

For ambient temperature lower than 0 °C consult us.

Setting values advised for operating temperature: +50 ÷ +65 °C.

Attention! Be sure that all operations foreseen for the installation have been executed, by using tables 12.1 and 12.2. It is necessary to protect the thermostatic valve from any shock or stroke.

9 - Accessories

IMPORTANT. Rossi has the right to supply interchangeable probes such as functional technical specifications and connections, but with slightly modified case dimensions.

The probes (temperature probe, level probe) are an integrating part of safety system and must be connected to control devices of category to ISO 13849-1.

Control devices must work independently from electric power devices, needed for the operation. Follow the "fail+safe principle" for above mentioned devices.

Control device and/or connection logics must be realized with a locking system avoiding the accidental restart of operation, in case of stop

9.1 - Heater

Oil heater for starting the gear reducer at low temperature, **design ATEX II 2G EExd IIC T4**. **When the gear reducer is supplied in 2GD design is equipped with ATEX oil temperature probe as standard** (see ch. 9.2) for piloting of the heater and the check of gear reducer; for gear reducer design 3GD the oil temperature probe is Buyer's responsibility.

The heater is piloted through proper control device releasing when achieving the pre-set oil temperature.

IMPORTANT. The data stated in the table refer to **mounting positions B3** and **B8**; for other mounting positions, consult us.

Features:

– specific power 2W/cm^2;
– single-phase supply 230 V 50-60 Hz or three-phase Δ 230 Y 400 V 50-60 Hz (see table 9.1.1);
– stainless steel resistors AISI 321;
– metallic terminal box; cable gland protection IP 65;
– Horizontal mounting with oil bath lubrication;
– max oil temperature 90°C;
– threaded brass joint;

Set the operating threshold of heater at 50 °C and the reset threshold at 30 °C. In case of running at T_{amb} < 0 °C, consult us.

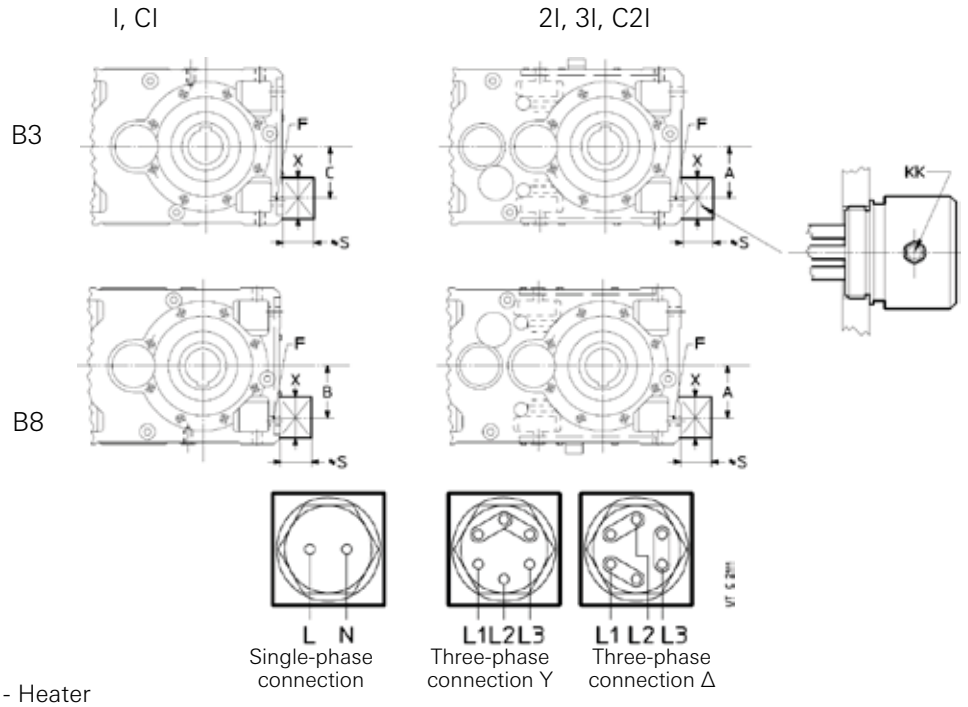

Table 9.1.1 - Heater

Gear reducer size	A	B	C	F	S ≈	X ≈	P ≈ W	KK	Supply
125	85	85	85	G 1"	85	85	200	Pg 11	1~ 230 V 50-60 Hz
140	100	85	100						
160	125	114	114	G 1" 1/4			400		
180		100	125						
200	150	146	146	G 1" 1/2	90		600	Pg 13	3~ Δ 230 Y 400 V 50-60 Hz
225		140	155						
250	200	170	170	G 2"			1000		
280		170	235						
320, 321	250	235	235				1400		
360		222	318						

9.2 - (Oil and bearing) Temperature probe

Probe type	Oil Fixed connection without immersion bulb / optional immersion bulb	Bearing Sliding connection not possible immersion bulb	Connection 4 wire
Ex_d **ATEX II 2 GD EEx_d IIC T6**	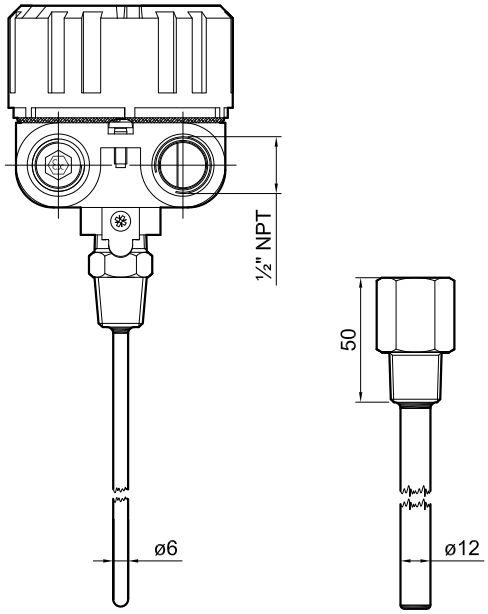	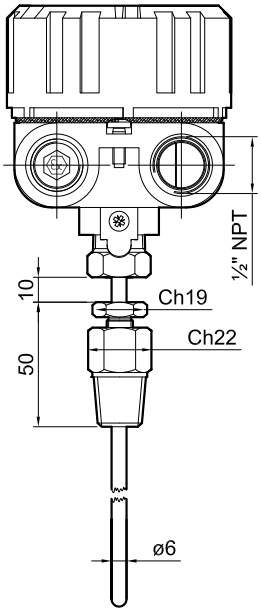	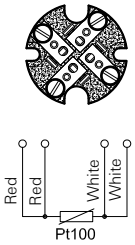 4 terminal ceramic base: – max current (d.c.) 380 mA – max voltage 30 V – max power 1,2 W – max probe power 0,5 W
Ex_ia **ATEX II 2 GD EEx_ia IIC T6**	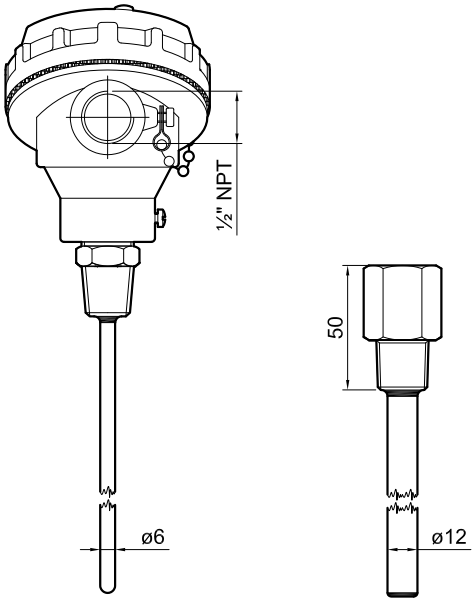	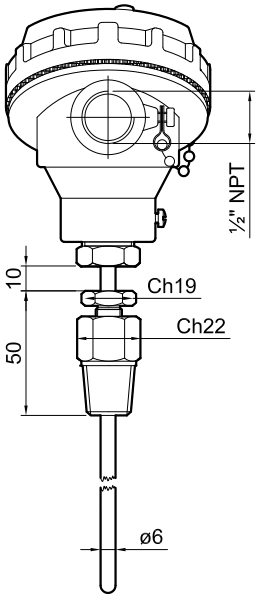	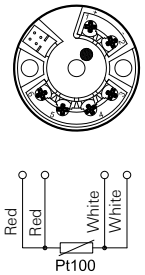 Transmitter TMT182: – current (d.c.) 100 mA – voltage 30 V – power 0,75 W

The temperature probe is realized with a thermo-resistor Pt100 having following features:
– platinum wire with 100 Ω at 0 °C according to EN 60751;
– single element;
– 4 wire connection according to IEC 751;
– precision class A according to CEI EN 60751;
– alluminium body supplied without cable gland; cover screwed with pin chain and earth screw; IP66;
– gaiter AISI 316 diameter 6 mm;
– range of measurement -40 °C T +160 °C

For electric specifications and connections schemes refer to specific instructions about the probe and the internal transmitter TMT 182 output 4 ... 20 mA, if any.

Installation and maintenance

Fit the coupling with sliding probe into the appropriate threaded hole of the gear reducer (for the position refer to SPT scheme attached to present operating instructions) by using a spanner key 24, loosen the hexagon using a 19 mm spanner and slide the probe of the thermometer in (up to the point of contact when the temperature of a bearing is to be measured) so that the head of the thermometer is closer to gear reducer.

The electrical connections must be made with copper shielded "twisted" wires separated from power cables. Internal and external earth connection to be made.

The body of the thermometer must be protected against all risks of damage.

Connect the sensor to a temperature control device with 2 operating threshold or similar device.

Periodically verify that:
– there is no erosion/corrosion of the gaiter
– the whole equipment is working efficiently by inserting into the circuit a resistance of a known value and simulating a known temperature.

Attention! Assemble and **disassemble** the sensor with **gear reducer without oil.**

Calibration

2 operating thresholds are foreseen:
– **Alarm**: anormal temperature increase; consult the table 11.9 and identify the possible over-heating causes; when no operation is possible, start the procedure of machine block.
– **Block**: achieving the maximum temperature allowed; start immediately the procedures of machine block, exclude the gearmotor from supply; consult table 11.9 and execute the controls of table 12.3.

Unless otherwise stated in the eventual supplementary documentation attached to present operating instructions, proceed as follows:

Calibration of **oil temperature probe**

At the end of commissioning (see ch. 7) when gear reducers or gearmotors reach a steady thermal condition measure the oil temperature $\boldsymbol{T}_{oil}$ and ambient temperature $\boldsymbol{T}_{amb}$ and calibrate the operating temperature (alert) of the device connected with the oil probe at the lowest temperature between the following two:
– $\boldsymbol{T}_{calculation} = \boldsymbol{T}_{oil\,[°C]} - \boldsymbol{T}_{amb\,[°C]} + \mathbf{45}$ [°C]
– $\boldsymbol{T}_{alert} = \mathbf{85}$ [°C]

The **machine block** temperature cannot exceed $\boldsymbol{T}_{stop} = \mathbf{100}$ [°C].

Calibrating of **bearing temperature probe**

Calibrate the operating temperature (alert and block) of the device connected to bearing probe as follows:
– $\boldsymbol{T}_{alert} = \mathbf{100}$ [°C]
– $\boldsymbol{T}_{stop} = \mathbf{110}$ [°C]

9.3 - Oil level switch with float

II 1/2 G EEx d IIC T6

It is a level control device with reed contacts in a supporting stem moved by the magnetic field activated by the magnets included in the float.

The float and the supporting stem are included in a hollow column of not magnetic material connected to the gear reducer housing through communicating vessels.

Features:
- 2 wires connection;
- Max voltage: 350 V
- maximum current: 1.5 A
- 1 cable input 1/2" UNI6125 – IP65
- G 1" brass joint.

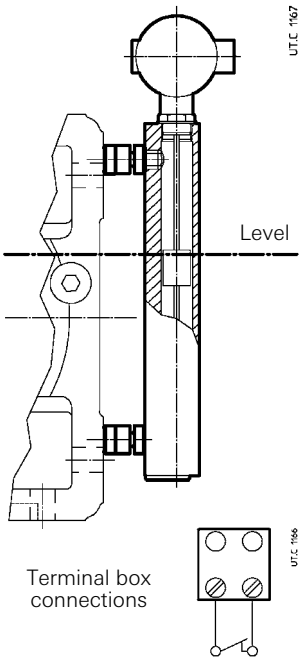

Installation and maintenance

The accessories used for cable input and for covering unused holes must be certified according to EN 60079-0 and EN 60079-1 standards.

The level switch must be installed and maintained according to plant and maintenance standards for environments classified to explosion proof for the presence of gas (i.e.: EN 60079-14, EN 60079-17 or other national standards). The level switch box must be earth connected.

Only proper tools have to be used for installing and disassembling the level switches. Never use electrical connections for manual installation.

The level switch cables must be installed in mechanical protections such as conduit pipes with separating joints at the top and the end of the pipes. Minimum cable section has to be 0,22 mm^2.

All active/passive safety barriers and connected devices (insulated amplifiers, relays) if any must be certified according to EN 60079-11 standards with [EEX ia] IIC protection and have to be installed in a safe area. The contacts are “REED” type and can carry up to ca. 100 000 000 operations during their life cycle. The switch power is relatively low (30-100 VA/W depending on application). For the safe use of the contacts it is recommended to drive inductive/capacitive power-loads through auxiliary relays or to use transient dampers/ Suppressors If used in accordance with its mechanical and electric specifications, this series of instruments does not need any specific maintenance. **Check very 6 months** the probe functionality as per table 12.3. Protect the switch head if there may be a risk of hurts with foreign matters.

Calibration

The switch is supplied ready for use; when level goes down approx 5 mm, the switch goes on and contact opens. **When filling oil in the gear reducer it is necessary to verify that device is properly calibrated.** If any problems occur during this operation contact Rossi.

9.4 - TCA 2BA thermostat

II 2 GD EEx d IIC T6 / T85 °C IP65

Features:

- Scale: the instrument is fitted as standard with an approximate scale of the setpoint indication;
- body: alluminium alloy, copper and copper alloy free;
- vapor tension sensor;
- cable entry Ø 1/2”-14 NPT-F;
- cable entry Ø 1/2"-14 NPT-M;
- setting range -40 ÷ 170 °C;
- maximum bulb temperature 180° C;
- current carrying capacity 15 A at 220 V (a.c.); 2 A at 24 V (d.c.);
- SPDT contact.

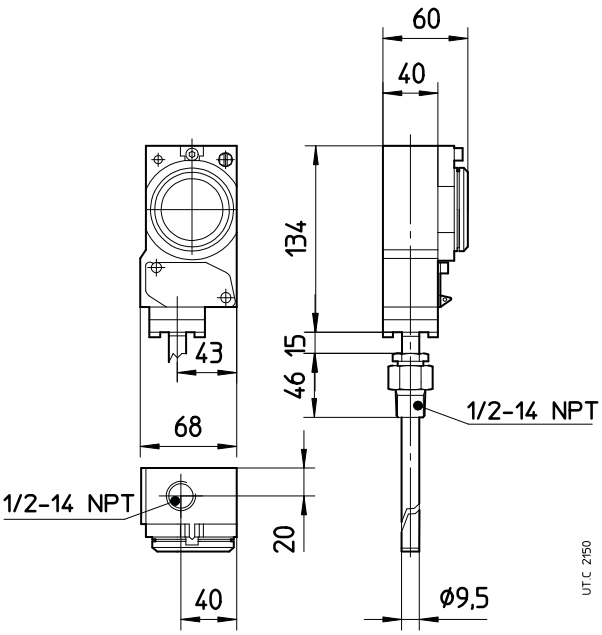

Fig. 9.4.1

Installation and maintenance

Assemble thermostat in the proper hole of gear reducer (see position indicated in the enclosed SPT sketch). Carry out electrical connections according to the current standards. Protect the body of the thermostat if there may be a risk of being damaged by foreign particles. The connection of the thermostat shall be made by cable entries or a stopping box of a flameproof type, certified EExd IIC (for B121-120) or EExd IIB (for TRI120).

The thermostat must not be altered or modified: if modification is necessary consult Rossi.

When the thermostat has an external and an internal grounding terminal, the internal grounding terminal shall be used as **primary** equipment grounding means whereas the external grounding terminal is only for a supplementary (secondary) grounding connection where local authorities permit or require such a connection.

Carry out periodical checks to verify that the whole equipment is efficient according to table 12.3. To prevent ignition of hazardous atmospheres, **disconnect circuits before opening the thermostat.**

Attention! Assemble and **disassemble** the sensor with **gear reducer without oil.**

Calibration

The thermostat is to be calibrated for a maximum threshold temperature of 85° C. If, after commissioning (when gear reducer or gearmotor reaches steady thermal conditions), the oil temperature T_{oil} and ambient temperature T_{amb} can be measured, calibrate the unit at the lower temperature between the following two:

- $\boldsymbol{T}_{calculation} = \boldsymbol{T}_{oil\,[°C]} - \boldsymbol{T}_{amb\,[°C]} + \mathbf{45}$ [°C]
- $\boldsymbol{T}_{alert} = \mathbf{85}$ [°C]

The **machine block** temperature cannot exceed $\boldsymbol{T}_{stop} = \mathbf{100}$ [°C].

9.5 - Flow gauge BFS-20

II 1 GD EEx ia IIB T6/T100°C IP6X

It's a capacity control device.

The measurement is executed through a piston movement equipped with loaded spring, free to flow inside a cylindrical pipe. The piston movement depends from device calibrating and from its minimum and maximum setup capacity. This device is equipped with viscosity compensation system.

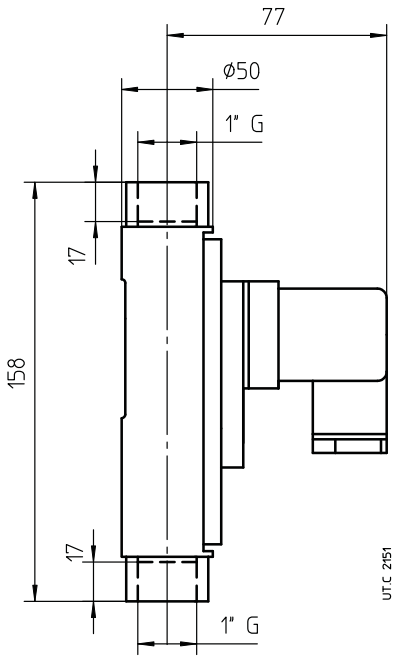

Running features:

– Circuit voltage *U* = 28 V;

– Circuit current *i* = 50 mA;

– Supply 45 V - 1 A;

– Electrical connection to DIN 43650;

– Maximum pressure *P* = 10 bar;

– Maximum temperature *T* = 120 °C;

– Viscosity compensation from 30 to 600 cSt;

– Capacity measurement range 2 - 90 l/min;

– IP 65 protection;

– 3/4" G o 1" G thread connection;

Calibration

The flow gauge must be calibrated for a minimum level equivalent to 70 % of capacity. During the running it is necessary to verify the correct calibration of the device. If any problems occur during this operation contact Rossi.

Installation and maintenance

The flow gauge must be installed and maintained according to installation and maintenance rules for environments classified against the risk of explosion for gas presence (example: EN 60079-14, EN 60079-17 etc.).

The instrument can be mounted in whatever position but in order to execute a careful measurement it is necessary to mount it in vertical direction and that the flow traverses it from the bottom to the top.

The oil must be pollution particles free, otherwise the instrument could not operate properly; install an oil filter or a magnetic filter, in order to avoid this problem.

The device must be installed far away from inductive or magnetic fields and at a minimum distance of the iron parts of 10 mm.

During the assembly of the device, avoid rotating the electrical connections inside the tabular hose in order to avoid any damage to the instrument.

Pre-arrange suitable protection devices against electric overloads.

Adjust the switching point according to the measurement range so that the contact is open when the capacity achieves the minimum setup point.

The flow gauge, if used properly according to its mechanical and electrical features specified, does not need any careful maintenance, but it is recommended to do a specific check every 6 months in order to control the correct running as per table 12.3.

Protect the probe body from any external impact.

The probe body must be earth connected.

In any case, refer to the installation and maintenance instructions; consult us, if need be.

10 - Commissionning

10.1 - General

Carry out a general check, making particularly sure that the gear reducer is filled with synthetic oil in the correct quantity, with the proper viscosity and one of the brands recommended in table 6.3.

If an external lubricating system is present (forced lubrication, cooling unit) oil is to be filled to the correct level with the external system full of oil.

Be sure that the safety and control devices assembled on the gear reducer and requiring electric power supply at user's care are active and running.

Be sure that the independent cooling units (with coil with internal heat exchanger and independent cooling unit) are working during the gear reducer running (see ch. 8.2).

Where Y-Δ starting is being used, input voltage must match the motor lower voltage (Δ connection).

For asynchronous three-phase motor, if the direction of rotation is not as desired, invert two phases at the terminals.

Before running gear reducers fitted with **backstop device, make sure that the direction of rotation in machine, gear reducer and motor all correspond correctly** (see ch. 5.12).

10.2 - Running-in

A **running-in** period with gear reducer running at 50% of rated torque is suggested as follows:

– of approx. 400 ÷ 1 600 h for gear reducers with worm gear pairs in order to reach maximum efficiency;

– of approx. 200 ÷ 400 h for gear reducers with bevel and/or cylindrical gear pairs in order to reach the best possible running conditions.

The temperature of both gear reducer and lubricant may well rise beyond normal values during running-in, but lower than the maximum value stated on name plate. After the running-in period it may be necessary to verify the gear reducer fixing bolt tightness.

During the first running hours it is possible to have a slight leakage of grease from the seal rings, which will not affect the good running.

Note: worm gear reducer efficiency is lower in the **first running hours** (about 50) and at every cold starting (efficiency will be better with oil temperature increasing).

At first commissioning do all checks listed in table 12.2. The controls, for the devices of category 2, must be repeated after 24 hours and after one week.

Check that the unit is not faulty (broken bearings, keys, shafts, etc.) or shows signs of incipient malfunction (e.g. increased running noise/vibration, etc.).

10.3 - Measurement of surface temperature

Measure by a thermometer the surface temperature of gear reducer close to the high speed shaft (gear reducer) or at the coupling surface between motor and gear reducer (gearmotors) in the position which is most protected from air circulation.

When commissioning this temperature is to be kept under control and the max value is to be noted; the values are to be periodically checked (according to table 12.3) and compared with those which were previously noted in order to verify if there is any increase; **if a significant increase (≈ 10%) occurs, something is not working properly and the machine must be stopped: consult Rossi.**

Attention! Measure the difference in temperature (ΔT) compared to ambient temperature at the same operating conditions.

Note: the max surface temperature is reached after approx **1÷4 h** running on full load (the heating time is proportional to gear reducer size). The difference in temperature shall not exceed ambient temperature by more than **45 K**

11 - Maintenance

Do all checks and verifications according to table 12.3.

The **replacement of seal rings**, **changing the oil** and all standard operations that do not require the opening of the assembly covers to replace transmission elements (i.e.: shafts, gears, bearings, etc.) is considered planned maintenance. This planned maintenance may be executed by **qualified and responsible person/s** as designated by the user of the equipment, and is usually actioned without direct support of Rossi Aftersales team. Rossi Spare parts (excluding lubricant) must be used and ordered either directly from Rossi or one of its authorised dealers, specification details can be identified via the code of gear reducer's name plate. Any **extraordinary maintenance operations** (i.e.: bearings, gears replacement, etc.) **must be conducted exclusively by skilled Rossi personnel**. Therefore any spare parts which includes but is not limited to bearings, gears, shafts replacement has **to be conducted via Rossi's approved service network**. It is possible to send the Rossi product to any Rossi approved service network site, for any maintenance requirement, subject to prior arrangement or notification. Rossi does not accept any responsibility and will make void any potential warranty claims for product damages and/or operational malfunctions, should original and approved Rossi parts and accessories not be used**.**

11.1 - General

Before starting any maintenance operations (disassembling, oil change, seal ring change, etc.):

– **ensure there is no potential explosive atmosphere** all around.

– **disconnect the motor** (including the auxiliary equipments) **from the electrical supply, and the gear reducer from load;**

– be sure that all safety systems have been activated against the accidental starting and if necessary, utilize mechanical locking devices (to be removed before commissioning);

Maintenance procedures to be adopted:

– **LOTO** (Lockout/Tagout): the machine must be disconnected (electrically and mechanically segregated from the installation).

– HOT Works: hot fitting of components (ex. to the shaft end) can absolutely only be made in certified safe areas.

Do not weld anything to the gear reducer/gearmotor as this can damage gear pairs, bearings, oil seals. Do not use the housing to ground welding equipment.

Maintenance technicians must wear appropriate work apparel (antistatic clothing, gloves, etc.).

Stop the machine and insulate the power supply to ensure there will be no accidental starts in the following circumstances:

a) when maintaining labyrinth seals and greaser;

b) when maintaining bearings with separate lubrication of the backstop device;

c) control of:

– cleaning of external surfaces and air passages of gear reducer or gearmotor;

– oil level;

– visible checks for oil deterioration (metal parts, water, sludge, etc.);

  – correct tightening of fastening screws (feet, flange), shrink disc and hub clamp, if any (see 7.2) and of electrical bonding;

– cleanliness of filter and functionality of valve of filler plug;

d) lubricant leak;

e) critical threshold of eventual safety devices has been exceeded.

For gear reducers **with level plug or equivalent system** (plug for flowing over level, plug with dipstick) verify that oil level has not lowered.

For gear reducers without level plug, check for oil leaks (dripping, oil spots, etc.) with the machine running and at rest.

In case of lubricant leak, before commissioning again the gear reducer or gearmotor:

– collect the a.m. lubricant and dispose of it according to the law in force;

– identify the cause of leak (if necessary, consult Rossi).

– reset the level and the quantity requested.

In presence of dusty environment pre-arrange an adequate maintenance plan so that the thickness of dust laying on gear reducer or gearmotor surface is reduced to a minimum and never exceeding 5 mm.
For this operation use antistatic materials.

Be sure that the safety and control devices are effective.

Attention! After a running period, even if thermal range is not achieved, gear reducer is subject to a light internal overpressure which may cause burning liquid discharge. Therefore, before loosening whichever plug wait until gear reducer has become cold; if not possible, take the necessary protection measures against burning due to warm oil contact. In all cases, always proceed with great care.

Maximum oil temperatures indicated in lubrication table (see ch 6.3) do not represent a hindrance to the gear reducer regular running.

When dismounting the cover (whenever gear reducers are provided with) or the cap, reset the sealing with adhesive on cleaned and degreased mating surfaces.

All bolts which may be damaged during assembling and disassembling operations are to be replaced with new ones having equivalent specifications and resistance class.

Occasional maintenance such as replacement of gear pairs, bearings, etc. **must only be done by qualified Rossi technicians**.

We recommend to purchase spare parts and accessories from Rossi.

Rossi undertakes and grants no responsibility or guarantee for any damages and/or malfunctions arising from the use of non-original Rossi spare parts and/or accessories.

In case of long rest periods, the gear reducer must be committed for a short time every 3 weeks; for rest periods longer than 6 months the gear reducer must be treated adequately for the conservation: consult Rossi.

11.2 - Oil change

Execute the oil change with **machine at rest** and **cold gear reducer**.

Pre-arrange a proper tank system for the drain oil, unscrew the drain plug and the filler plug to facilitate the drain; make sure that all oil has been drained, inclining the gear reducer or removing any residual parts with a suction pump; dispose the drain lubricant according to the laws in force.

Wash the inside part of gear reducer housing using the same oil type suitable for the running; the oil used for this wash can be applied for further washings after proper filtering by 25 µm of filtration standard;

Fill the gear reducer with oil again up to level.

During the oil change, replace the seal rings.

When dismounting the cap (whenever gear reducers are provided with), reset the sealing with adhesive on cleaned and degreased mating surfaces.

For lubrication interval see table 6.2.

Replace or regenerate synthetic oil each 5 ÷ 8 years according to gear reducer size, running and environmental conditions.

Never mix different makes of synthetic oil; if oil-change involves switching to a type different from that used hitherto, then give the gear reducer a through clean-out.

11.3 - Coil and internal heat exchanger

In case of long non-running periods at ambient temperatures lower than 0 °C, the coil should be emptied out using compressed air to blast out all the coolant, so as to avoid freezing-up which would cause the coil to break.

Verify that there are no deposits inside the coil which may obstruct water circulation or affect cooling. If any, wash the coil with suitable chemical cleaning products or consult Rossi.

Check the internal heat exchanger periodically and proceed with the cleaning of exchange surfaces taking care not to damage the finned surfaces.

11.4 - Seal rings

Duration depends on several factors such as dragging speed, temperature, ambient conditions, etc.; as a rough guide it can vary from 1 600 to 12 500 h. In any case replace them every 5 years.

It is always recommended that the seal rings are replaced with new ones when they are removed or during periodic checks of gear reducer; in this case, during the mounting phase:

- lubricate generously (with grease type KLÜBER Petamo GHY 133N) the rotating seating of seal ring and the seal lip;
- procede with mounting paying attention not to damage the seal lip due to shocks or accidental hurts or radiation of heat deriving from warm mounting operations of other components;
- position the seal lip **not in correspondence** of the furrow produced by previous ring;
- fasten the seal ring in its seat on gear reducer housing through the **application of locking adhesive** (type LOXEAL Istant 29); the application of adhesive is required also in case of **cap** replacement.

When replaced, the new seal rings must be made of fluorinated rubber (VITON®).

In case of designs with **labyrinth seal and greaser** («Taconite»), re-grease at least every month.

11.5 - Bearings

Since there are several types of bearings in a gear reducer (roller, tapered roller, straight roller, etc.) and each bearing works with different loads and speeds depending on the input speed, the nature of the load of the driven machine, the transmission ratio, etc., and with different lubricants (oil bath, oil splash, grease, oil circulation, etc.), it is not possible to define any periodical maintenance and replacement of bearings in advance.

It is therefore necessary to undertake periodical checks (according to table 12.3) to verify noise level and vibrations with the help of appropriate diagnostic equipment and instruments. If the measured values worsen even slightly it is necessary to stop gear reducer or gearmotor and after having inspected inside and consult Rossi, if need be.

If the failure of a bearing and the stopping of the machinery constitute a danger to people, execute a continuous monitoring of vibrations and noise level.

11.6 - Metal filler plug with filter and valve

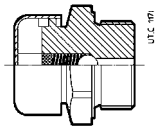

For the cleaning of plug (see ch. 6.1) it is necessary to unscrew it from the gear reducer (preventing any debris or other foreign items from entering the reducer), disassemble the cover, wash it with solvent, dry with compressed air and reassemble it.

Do this operation at least once every 6 months: if the environment requires it, reduce the maintenance interval.

11.7 - Sound levels

Most of the Rossi product range is characterised by **sound pressure levels** L_{pA} (mean value of measurement, assuming nominal load and input speed n_1 = 1 400 min^{-1}, at 1 m from external profile of gear reducer standing in free field on a reflecting surface, according to draft proposal ISO/CD 8579) **lower than or equal to 85 dB(A)**.

The table 11.8.1 shows the products which can exceed a.m. threshold. For further information about sound levels of every single product see Rossi technical catalogs.

Table 11.8.1 - Products that can exceed the threshold of 85 dB(A) of sound pressure levels.

	Helical (G, H (H02) series)								**Bevel helical** (G, H (H02) series)				
	R I		**R 2I**		**R 3I**		**R 4I**		**R CI**		**R C2I**		**R C3I**
i_N Size	⩽ 3.55 ⩾ 160	⩾ 4 ⩾ 200	⩽ 14 ⩾ 250	⩾ 16 ⩾ 320	⩽ 90 ⩾ 320	⩾ 100 ⩾ 4000 (⩾ 400)	⩽ 160 ⩾ 5000 (⩾ 500)	⩾ 200 ⩾ 6300 (⩾ 630)	⩽ 18 ⩾ 3200	⩾ 20 ⩾ 4000 (⩾ 400)	⩽ 63 ⩾ 4000 (⩾ 400)	⩾ 71 ⩾ 5000 (⩾ 500)	all ⩾ 6300 (⩾ 630)

11.8 - Gear reducer troubles: causes and corrective actions

Trouble	Possible causes	Corrective actions
Excessive oil temperature	Inadequate lubrication: – excessive or insufficient oil quantity – unsuitable lubricant (type, too viscous, exhausted, etc.) – wrong mounting position – too tightened taper roller bearings	Check: – oil level (gear reducer at rest) or quantity (see ch. 13 ... 16) – lubricant type and/or state (see table 6.3) and eventually replace it – change mounting position Consult Rossi
	Worm gear reducer with excessive load during running -in	Reduce the load
	Excessive ambient temperature	Increase the cooling or correct the ambient temperature
	Obstructed passage of air	Eliminate obstructive material
	Slow or missing air recycle	Arrange auxiliary ventilation
	Radiance	Screen gear reducer and motor properly
	Inefficiency of auxiliary bearing lubrication system	Check the pump and the pipes
	Bearings failure, defect or bad lubrication	Consult Rossi
	Inefficient or out of service oil cooling system: obstructed filter, insufficient oil (exchanger) or water (coil) flow rate, pump out of service, water temperature > 20 °C, etc.	Check the pump, the pipes, the oil filter and safety devices efficiency (manostats, thermostats, etc.)
Anomalous noise	One or more teeth with – dents or spallings – excessive flanks roughness	Consult Rossi
	Bearings failure, defect or bad lubrication	Consult Rossi
	Taper roller bearings with excessive clearance	Consult Rossi
	Vibrations	Check the fastening and the bearings
Lubricant leaking from seal ring	Seal ring with worm, bakelized, damaged or false mounted seal lip	Replace the seal ring (see ch. 11.4)
	Damaged raceway surface (scoring, rust, dent, etc.)	Restore the seating
	Mounting position differs from the one stated on the name plate	Correctly position the gear reducer (see ch. 13 ... 16)
Oil leaking from filler plug	Too much oil	Check oil level or quantity (see ch. 13 ... 16)
	Incorrect mounting position	Check mounting position (see ch. 13 ... 16)
	Inefficient vent valve	Clean/replace filler plug with vent valve
Low speed shaft not rotating even with high speed shaft/ motor running	Broken key	Consult Rossi
	Completely worn gear pair	Consult Rossi
Lubricant leaking from joints (covers or half-housing joints)	Defective oil seals	Consult Rossi
Water in the oil	Defective cooling coil or heat exchanger	Consult Rossi

Motor: see specific instructions.

NOTE

When consulting Rossi state:
– all data on gear reducer or gearmotor name plate;
– failure nature and duration;
– when and under which conditions the failure occured;
– during the warranty period, in order not to loose validity, do not disassemble nor tamper the gear reducer or gearmotor without approval by Rossi.

12 - ATEX checks and verifications

Attention. Do all checks and verifications listed below, at first commissioning and during normal running. These checks are integrating parts of the device protection system and have to be carefully executed.

Table of main installation checks and operations

Operation / Check	Reference
Has the consignment been damaged during shipping (dented shafts, strained oil seals, caps a/o plugs)?	3.1, 5.1
Has all packaging been removed?	3.5
Does the nameplate data correspond to the order and fit the installation area?	3.2, 5.1
Beside the present operating instructions, is the eventual additional documentation available (SPT sketch, probes, thermostats, etc.)?	5.1
Is the mounting position of name plate correct for the actual installation?	3.1, 5.1, 13.14, 15, 16
Have all coupling surfaces been cleaned and greased?	5.1
Have you carefully aligned the gear reducer shafts with motor and driven machine shafts?	5.1
Are the fan cage bolts fully tightened down?	5.1, 5.2
Are you sure that the installation is not to be done in a potentially explosive atmosphere?	5.1
Have all fastening bolts been correctly tightened (see table 5.2.1)?	5.1, 5.2
Has the shrink disc been correctly tightened?	5.10
Has the hub clamp correctly tightened?	7.2
Has the eventual cylindrical pinion been correctly mounted on the motor shaft?	7.3
Is there oil in the gear reducer (correct quantity/level)?	5.1, 6, 10.1, 13 ... 16
Is the level plug accessible?	5.1, 6.1
Is the filler plug with filter and valve present (only size ⩾ 100)?	6.1, 11.6
Is the filler plug accessible for maintenance?	6.1, 13 ... 16
Has the machine shaft for mounting with shrink disc got correct dimensions tolerances and roughness?	5.10
Has the locking assembly cover been pre-arranged?	5.10
Are the accessories (thermal probes, etc.) compliant with the ATEX specifications for the installation?	5.1, 9
Are you sure that the input speed cannot exceed 1 500 min^{-1}?	5.1
Have you hooked up all required monitoring/safety devices (resistance thermometer, oil level switch, etc.)?	5.1, 9
If a backstop device is mounted, do the direction of free rotation and drive direction of the service and the motor correspond?	5.1, 5.12
Are you sure that the environment is well ventilated and that the ambient temperature is and will be ⩽ 40 °C?	2
Is there any oil leaks?	10.1
Have you done electrical bonding connection?	5.1
Have you aligned gear reducer and machine shafts?	5.1, 5.11
Have you connected the cooling coil, if any?	8.2
Have you connected the internal cooling exchanger, if any?	8.2
Have you foreseen a proper space for the suction of the cooling fan?	5.1

12.2 - Table of commissioning checks and operations[1)]

Code	Object	Check	On starting (category 2 and 3)	After 24 h and after one week (category 2)
A	**Oil leaks** (oil seals, joining surfaces, plugs, etc.)	Visual check	Keep under control for the first 4 h:	Temporary check
B	**External surface temperature**	Check by thermometer	Keep under control the surface temperature until it reaches a steady condition and verify that $\Delta T \leqslant 45$ K, keep the measured values to compare them in following measurements (see 10.3)	Measure and compare values with those previously measured see 10.3)
C	**Noise levels**	Sensory check or referably by noisemeter	Keep under control for the first 4 h. When checking by an instrument keep the measured values to compare them in following measurements	Check and compare values with those previously measured
D	**Vibrations**	Sensory check or preferably by accelerometer	Keep under control for the first 4 h. When checking by an instrument keep the measured values to compare them in following measurements	Check and compare values with those previously measured
E	**Gear reducer bearings** (**unit pre-assembled with vibration monitoring device**)*	Check with proper instruments	Check on starting and after 4 h. Keep the measured values to compare them in following measurements	Measure and compare values with those previously measured
F	**Cooling coil**	Check by thermometer, chronometer, volume measurer (or other instruments)	Keep under control: water temperature 20°C, water flow rate 10 ÷ 20 dm^3/min; absence of water drip	Measure and compare values with those previously measured
G	**Functionality of oil/air cooling unit**	Check air temperature by thermometer Visual check: – fan direction of rotation – oil circulation	Keep under control for the first 4 h: air temperature ⩽ 40 °C; gauge pressure > 0; absence of oil leaks	Measure and compare values with those previously measured
H	**Functionality of oil/ water cooling unit**	Check circulation of water and oil	Keep under control for the first 4 h: water temperature ⩽ 20 °C, water flow rate 15 ÷ 20 dm^3/min; gauge pressure > 0	Measure and compare values with those previously measured
I	**Resistance thermometers*** (oil, bearings)	Check: – connections to control devices – setting of devices – general functionality	Read value of temperature on the control device and verify that it is lower than the established values. Keep under control for the first 4 h:	Measure and compare values with those previously measured
J	**Oil level control switch***	Check: – connections to control devices – setting of devices – general functionality	Keep under control for the first 4 h:	Temporary check
K	**Thermostat*** (**oil**)	Check: – calibration – electric connections to the safety switch (auxiliary circuits, etc.)	Keep under control for the first 4 h:	Temporary check
L	**Cleanliness of external surfaces**	Visual check	Dust thickness ⩽ 5 mm	Temporary check
M	**Cooling air passage**	Visual check	On starting and after 4 h	Temporary check
N	**Screw tightening**	Check by dynamo-metric wrench of the fastening bolts (feet and flanges) and shrink disc	Check when excessive vibration is detected and after 4 h	Measure and compare values with those previously measured
O	**Motor absorption**	Check by Wattmeter or ampmeter	Check on starting and after 4 h. Keep the measured values to compare them in following measurements	Measure and compare values with those previously measured

The installation responsible has to verify that safety circuits using control switches and thermostats are on, run properly and switch on at once.

Repeat a.m. check procedures:
– at any oil change;
– at any exceptional maintenance;
– after a continuous stop of 2 or more weeks.

12.3 - Table of inspections[1)] to be made during the normal operation (to be made after checks listed on table 12.2)

Code	Object	Inspections in absence of oil temperature probe	Inspections in presence of oil temperature probe	Ref.
A	**Oil leaks** (oil seals, joining surfaces, plugs, etc.)	every six months for category 3GD each month for category 2GD	every three months	
B	**External surface temperature**	every six months for category 3GD each month for category 2GD	every three months	10.3
C	**Sound levels**	every six months for category 3GD each month for category 2GD	every three months	11.5
D	**Vibrations**	every six months for category 3GD each month for category 2GD	every three months	11.5
E	**Gear reducer bearings (unit pre-assembled with vibration monitoring device)***	every six months		–
F	**Cooling coil and internal exchanger**	every two years		11.3
G	**Functionality of oil/air cooling unit**	every six months for category 3GD each month for category 2GD	every three months	spec. doc.
H	**Functionality of oil/ water cooling unit**	every six months for category 3GD each month for category 2GD	every three months	spec. doc.
I	**Resistance thermometers*** (oil, bearings)	every six months		–
J	**Oil level control switch***	every six months		–
K	**Thermostat* (oil)**	every six months		–
L	**Cleanliness of external surfaces**	when necessary, also every day (the dust thickness must not exceed a 5 mm thickness)		–
M	**Cooling air passage**	when necessary, also every day		–
N	**Screws and tightening torque**	at any oil change and when excessive vibration is detected		11.1
O	**Motor absorption**	every six months for category 3GD each month for category 2GD	every three months	–
P	**Electrical bonding**	every six months for category 3GD each month for category 2GD	every three months	–
Q	**Cleanliness of filler plug with filter and valve**	when necessary, at least every six months		11.6
R	**Labyrinth seals and greaser**	let in grease with pressure at least each month		spec. doc.
S	**Name plates**	yearly		–
T	**Gear reducer bearings with separate lubrication, backstop mounted on motor**	with uniform load and pollution free environment, lubrication is for life, otherwise replace grease at least every year for running < 12 h/d or every 6 months for running ⩾ 12 h/d		–
U	**Presence of water in oil**	yearly		–
V	**Restoration a/o preservation of surface protection**	when necessary to keep painting coat integral and retouching rusty spots, if any		5.1
W	**Oil seal replacement**	1 600 h ÷ 2 500 h adn on gear reducer revision		11.4
X	**Oil change**	see table 6.3		6.3
Y	**Cleanliness of oil filter**	when detected by clogging device or there is an increase in oil pressure		–
Z	**Motor bearings**	see motor's specific documentation		–

The installation responsible has to verify that safety circuits using control switches and thermostats are on, run properly and switch on at once.

The control intervals stated in the table are the maximum values; for heavy duty or very severe ambient conditions it may be necessary to reduce these intervals.

13 - A (A04) Series - Mounting positions, oil quantity, position of plugs

For inclined mounting positions, when "spec." is stated on nameplate in IM field, refer to the attached specific documentation.

13.1 - Oil (quantity) levels for worm GEAR REDUCERS and GEARMOTORS sizes 32 ... 81 (A (A04) series), supplied FILLED with OIL

Before commissioning, use a dipstick and check that the vertical distance X [mm] **between plug shoulder and oil level** corresponds to the value stated in the table 13.1.1.

Before checking ensure that there are no more gas pockets in the oil which is included in the gear reducer.

Measure as specified in fig. 13.1.1 with gear reducer in mounting position B7.

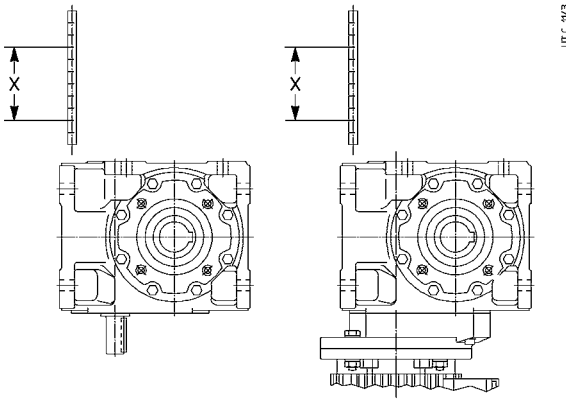

Fig. 13.1.1 - Position the gear reducer or gearmotor in mounting position B7 for oil (quantity) level measurement.

Tab. 13.1.1 - Oil level (dimension x) and quantity for gear reducers and gearmotors A (A04) series sizes 32 ... 81

Size	Train of gears Mounting position Oil level (dimension x[1]) [mm] and quantity [l]																	
	V						IV						2IV					
	B3, V5, V6		B6, B7		B8		B3, V5, V6		B6, B7		B8		B3, V5, V6		B6, B7		B8	
	mm	l	mm	l	mm	l	mm	l	mm	l	mm	l	mm	l	mm	l	mm	l
32	34	0.15	25	0.2	34	0.16	42	0.2	25	0.25	42	0.2	–	–	–	–	–	–
40	34	0.26	24	0.35	34	0.26	43	0.32	24	0.4	43	0.32	43	0.42	24	0.5	43	0.42
50	52	0.4	26.5	0.6	52	0.4	48	0.5	22	0.7	48	0.5	48	0.6	22	0.8	48	0.6
63, 64	59	0.8	30	1.15	59	0.8	58	1	30	1.3	58	1	58	1.2	30	1.55	58	1.2
80, 81	89	1.3	37	2.2	63	1.7	96	1.5	37	2.5	50	2	**B3**: 96 **V5**: 89 **V6**: 89	1.7 1.8 1.8	37	2.8	50	2.3

1) Voltage tolerance x: ± 2 mm.

13.2 - Mounting positions and plug position for worm GEAR REDUCERS and GEARMOTORS sizes 100 ... 250 (A (A04) series), supplied WITHOUT OIL

Verify oil level through the level plug which is placed in the position indicated the following figures. For mounting position B7 the level is stated on the dipstick mounted on the filler plug.

R V 100 ... 250

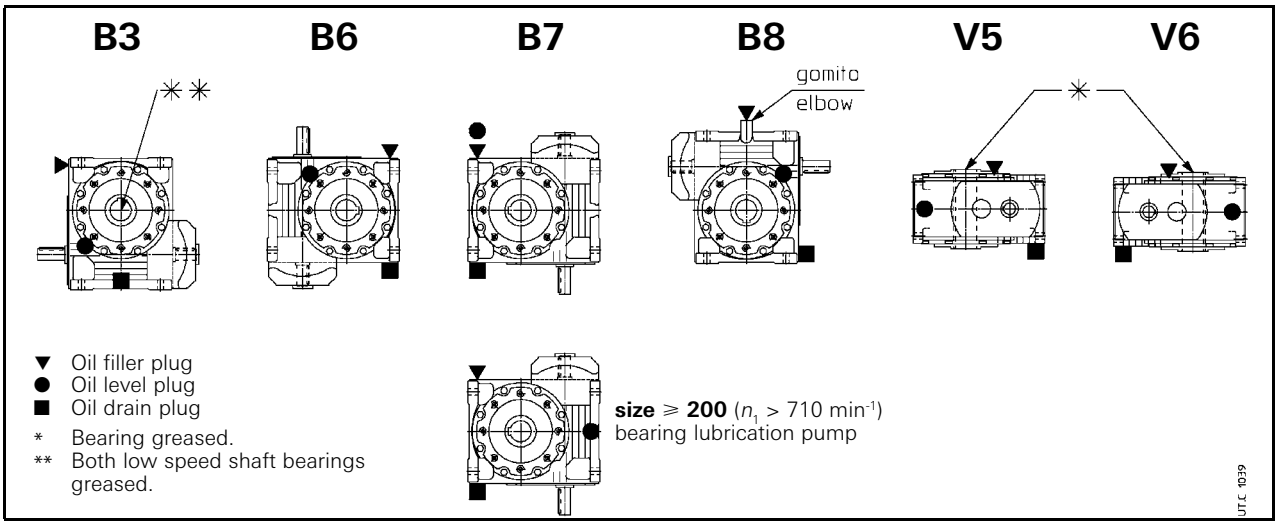

R IV 100 ... 250

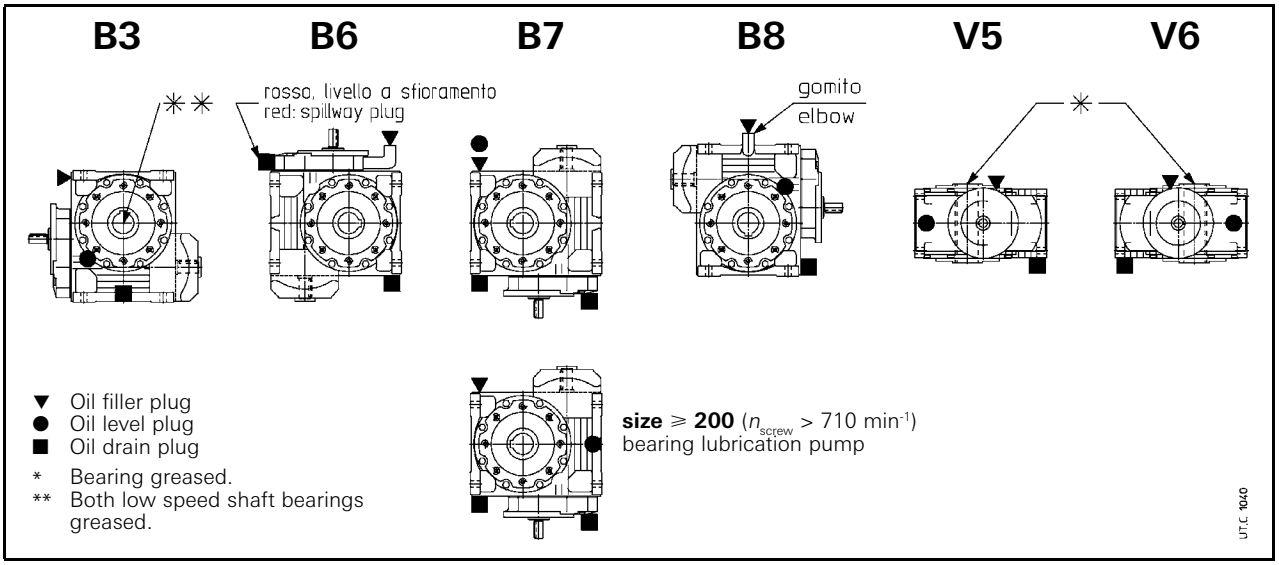

MR V 100 ... 250

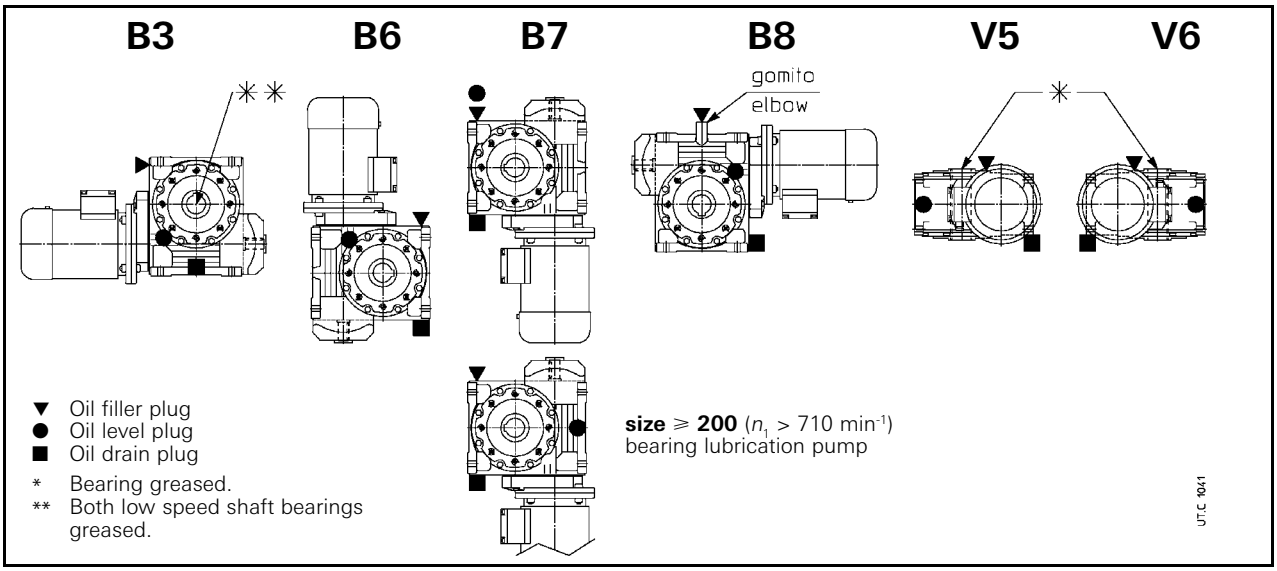

MR IV 100 ... 250

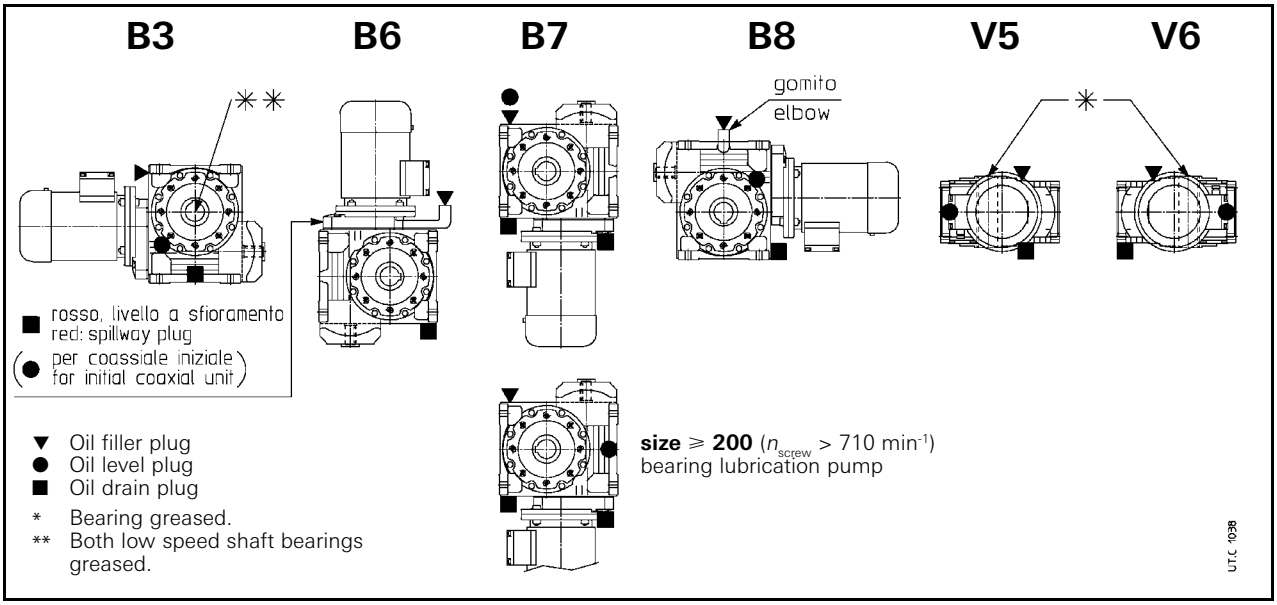

MR 2IV 100 ... 126

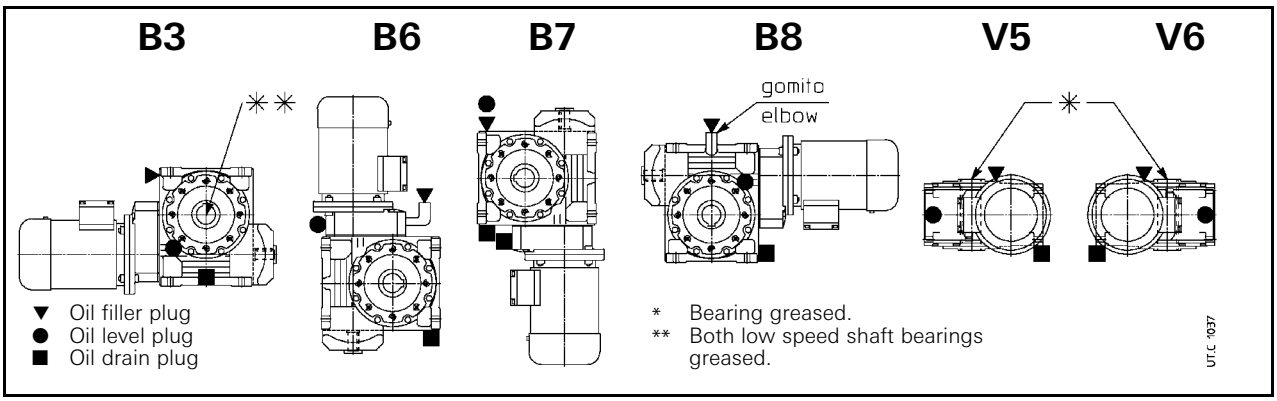

14 - E (E04) series - Mounting positions, oil quantity and position of plugs

For inclined mounting positions, when "spec." is stated on nameplate in IM field, refer to the attached specific documentation.

14.1 - Oil level (quantity) for coaxial GEAR REDUCERS and GEARMOTORS sizes 50 ... 81 (E (E04) series) supplied FILLED WITH OIL

Before commissioning of the units verify that the dimensions X [mm] between the **plug shoulder and oil level** corresponds to the value stated in table 14.1, using a dipstick.

Before checking ensure that there are no more gas pockets in the oil which is included in the gear reducer.

Measure as specified in fig. 14.1.1 with gear reducer in mounting position B6.

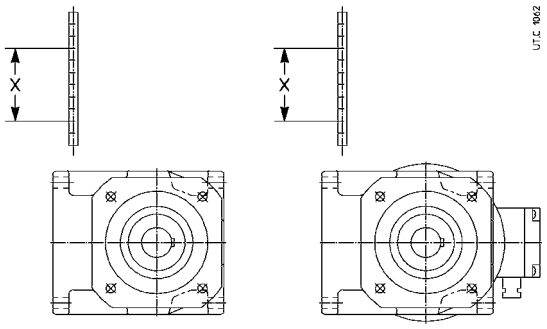

Fig. 14.1.1 - Position the gear reducer or gearmotor, mounting position B6 for the measurement of oil level (quantity).

Tab. 14.1.1 - Oil level (dimension x) and oil quantity gear reducers and gearmotors E (E04) series sizes 50 ... 81

Size	Train of gears											
	Mounting position											
	Oil level (dimension x[1]) [mm] and quantity [l]											
	2l						3l					
	B3		B6, B7, B8, V6		V5		B3, V5, V6		B6, B7		B8	
	mm	l	mm	l	mm	l	mm	l	mm	l	mm	l
50, 51	65	0.8	50	1.1	35	1.4	60	0.8	45	1.1	30	1.4
63, 64	120	1.6	90	2.2	60	2.8	115	1.6	85	2.2	55	2.8
80, 81	110	3.1	75	4.3	45	5.5	105	3.1	70	4.3	40	5.5

1) Tolerance of dimension x: ± 5 mm.

14.2 - Mounting positions and plug positions for coaxial GEAR REDUCERS and GEARMOTORS sizes 100 ... 180 (E (E04) series), supplied WITHOUT OIL

Verify oil level through the level plug which is placed in the position indicated the following figures. For mounting position B7 the level is stated on the dipstick mounted on the filler plug.

R 2I, 3I 100 ... 180

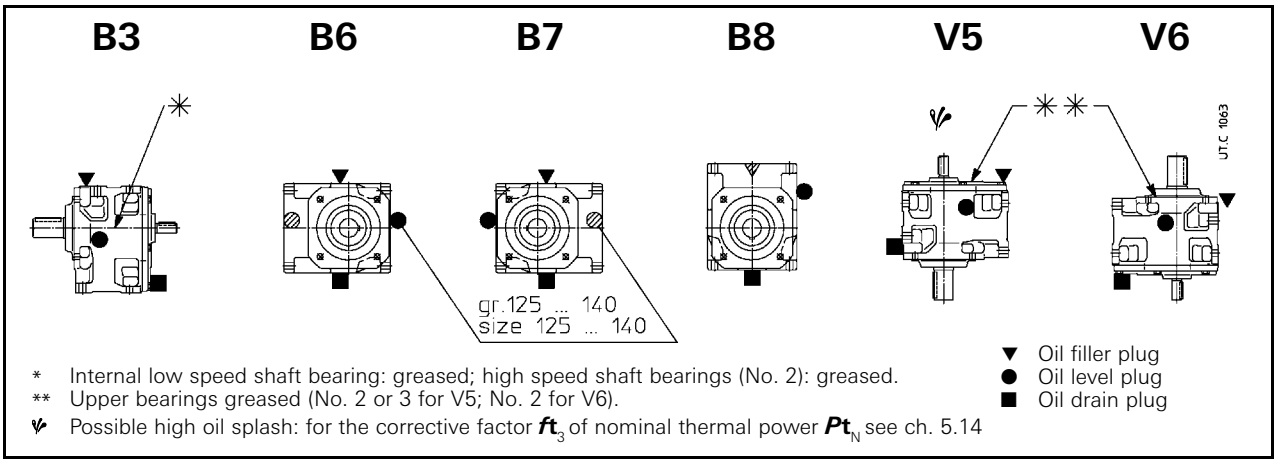

MR 2I, 3I 100 ... 180

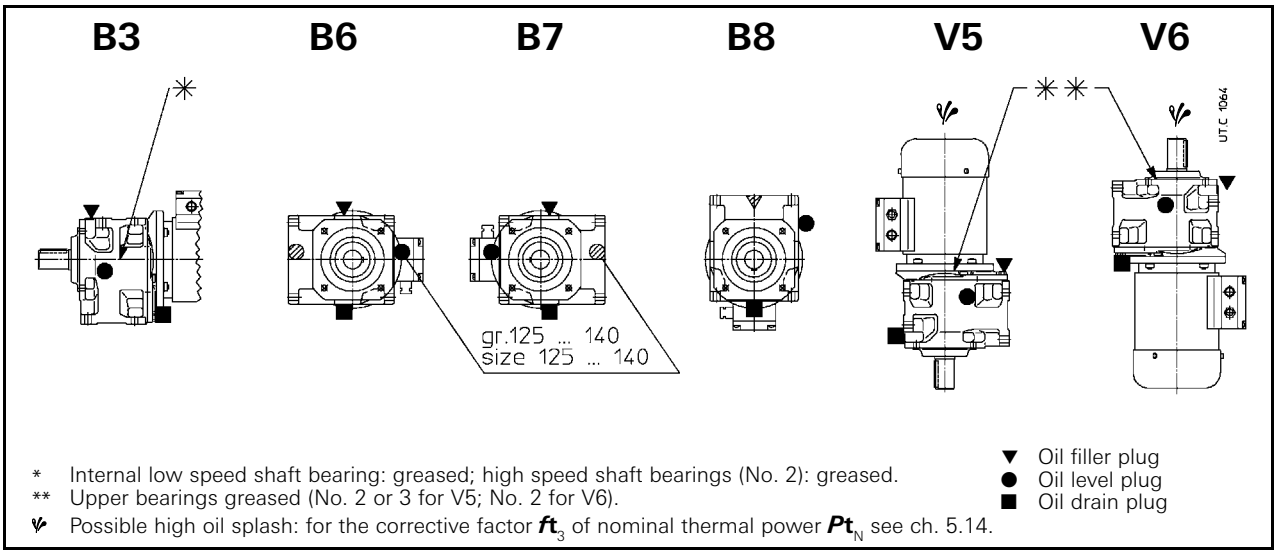

15 - G series - Mounting positions, oil quantity and position of plugs

For inclined mounting positions, when "spec." is stated on nameplate in IM field, refer to the attached specific documentation.

15.1 - Oil levels (quantity) for helical and bevel helical GEAR REDUCERS and GEARMOTORS sizes 40 ... 81 (G series) supplied FILLED with OIL

Before commissioning verify that the dimensions X [mm] **between the plug shoulder and oil level** corresponds to the value stated in table 15.1, using a dipstick.

Before checking ensure that there are no more gas pockets in the oil which is included in the gear reducer.

Measure as specified in fig. 15.1.1 (helical) and 15.1.2 (helical bevel).

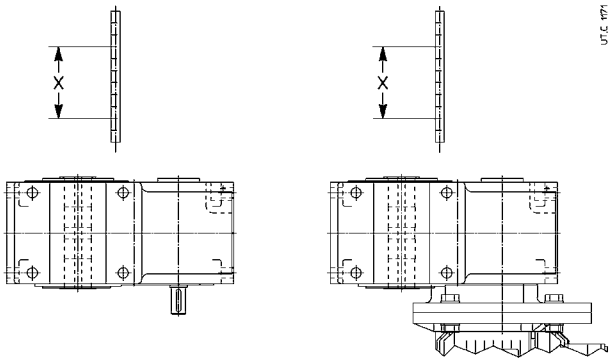

Fig. 15.1.1 - Position the helical gear reducer of gearmotor, mounting position V6 for oil level (quantity) measurement.

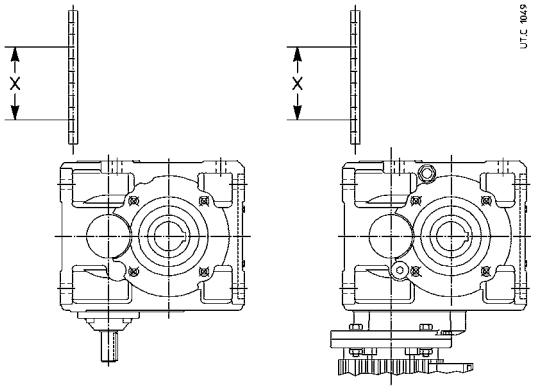

Fig. 15.1.2 - Position the bevel helical gear reducer or gearmotor, mounting position B7 for oil level (quantity) measurement.

Tab. 15.1.1 - Oil level (dimension X) and oil quantity for **HELICAL** gear reducers and gearmotors G series sizes 40 ... 81

Size	Train of gears Mounting position Oil level (dimension x[1]) [mm] and quantity [l]																							
	I						2I								3I						4I			
	B3, B8		B7		B6, V5, V6 2)		B3, B8		B6 R		B6 MR		B7, V5, V6 2)		B3, B8		B6		B7, V5, V6 2) 3)		B3, B8		B6		B7, V5, V6 2) 3)	
	mm	l	mm	l	mm	l	mm	l	mm	l	mm	l	mm	l	mm	l	mm	l	mm	l	mm	l	mm	l	mm	l
40	–	–	–	–	–	–	45	0.4	–	–	24	0.55	24	0.55	35	0.47	2	0.7	12	0.6	–	–	–	–	–	–
50	–	–	–	–	–	–	60	0.6	25	0.9	30	0.8	30	0.8	45	0.7	5	1.05	15	1	–	–	–	–	–	–
63, 64	80	0.7	65	0.8	46	1	60	0.9	42	1.4	48	1.2	48	1.2	58	1	40	1.5	**B7**: 50 **V5**: 50 **V6**: 50	1,3 1,4 1,3	58	1.1	40	1.8	50	1.4
80, 81	115	1.2	92	1.5	68	1.9	80	1.5	45	2.7	54	2.3	54	2.3	72	1.7	42	2.9	**B7**: 52 **V5**: 48 **V6**: 52	2,5 2,6 2,5	72	1.9	42	3.2	52	2.7

Tab. 15.1.2 - Oil level (dimension X) and oil quantity for **BEVEL HELICAL** gear reducers and gearmotors G series sizes 40 ... 81

Size	Train of gears Mounting position Oil level (dimension x[1]) [mm] and quantity [l]																			
	CI						ICI								C3I					
	B3, B6, B7 4)		B8		V5, V6 2)		B3		B6, B7 4)		B8		V5, V6 2)		B3, B7 4)		B6 5)		B8		V5, V6 2)	
	mm	l	mm	l	mm	l	mm	l	mm	l	mm	l	mm	l	mm	l	mm	l	mm	l	mm	l
40	48	0.26	30	0.35	41	0.3	31	0.31	15	0.5	30	0.4	50	0.35	–	–	–	–	–	–	–	–
50	48	0.4	30	0.6	50	0.45	50	0.45	15	0.8	30	0.65	54	0.5	50	0.5	15	0.9	30	0.7	54	0.55
63, 64	72	0.8	40	1	48	0.95	58	1	15	1.6	42	1.2	45	1.15	58	1.2	15	1.8	42	1.4	45	1.35
80, 81	90	1.3	50	2	56	1.8	90	1.6	25	2.7	48	2.2	56	2	90	1.9	25	3	48	2.5	56	2.3

1) Tolerance of dimension x: ± 5 mm for sizes ⩽ 50; ± 10 for size ⩾ 63.
2) For mounting positions V5 and V6 upper bearings are greased.
3) The first reduction stage (the first 2 stages for 4I), mounting position V5, is lubricated with grease for life.
4) For design UO3D, mounting positions B6 or B7 the bearings of upper bevel pinion are greased.
5) For C3I, mounting position B6, the bearing of the first gear pair (wheel side) is greased.

15.2 - Mounting position and plug positions for helical and bevel helical GEAR REDUCERS and GEARMOTORS sizes 100 ... 360 (G series), supplied WITHOUT OIL

Verify oil level through the level plug which is placed in the position indicated the following figures. For mounting position B7 the level is stated on the dipstick mounted on the filler plug.

R I 100

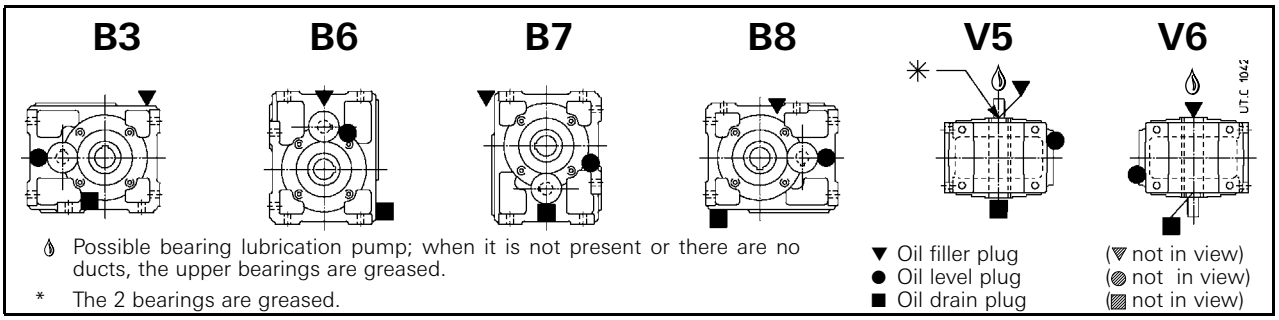

- Possible bearing lubrication pump; when it is not present or there are no ducts, the upper bearings are greased.
- * The 2 bearings are greased.

▼ Oil filler plug (▽ not in view)
● Oil level plug (◍ not in view)
■ Oil drain plug (▨ not in view)

R I 125 ... 360

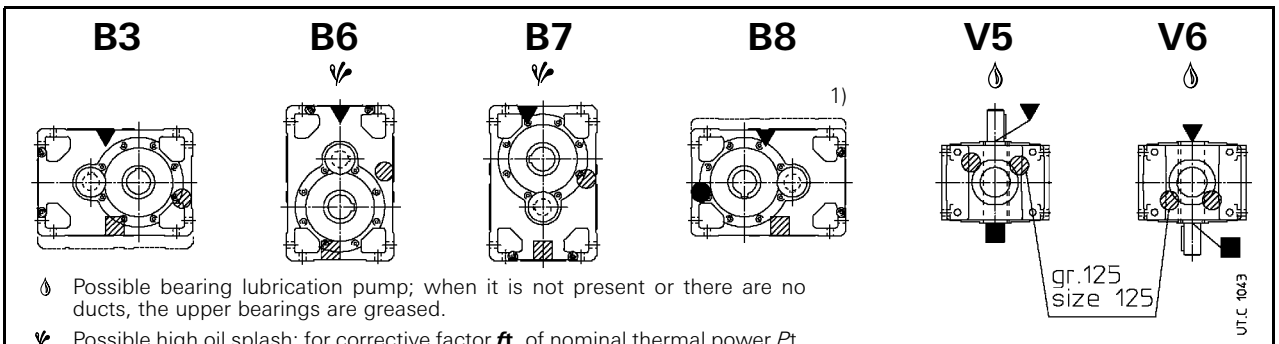

- Possible bearing lubrication pump; when it is not present or there are no ducts, the upper bearings are greased.
- Possible high oil splash: for corrective factor ft_3 of nominal thermal power Pt_N see ch. 5.14.
- 1) For sizes 140, 180, 225, 280, 360 see corrective factor ft_3 of nominal thermal power Pt_N see ch. 5.14.

▼ Oil filler plug (▽ not in view)
● Oil level plug (◍ not in view)
■ Oil drain plug (▨ not in view)

R 2I 100, 125

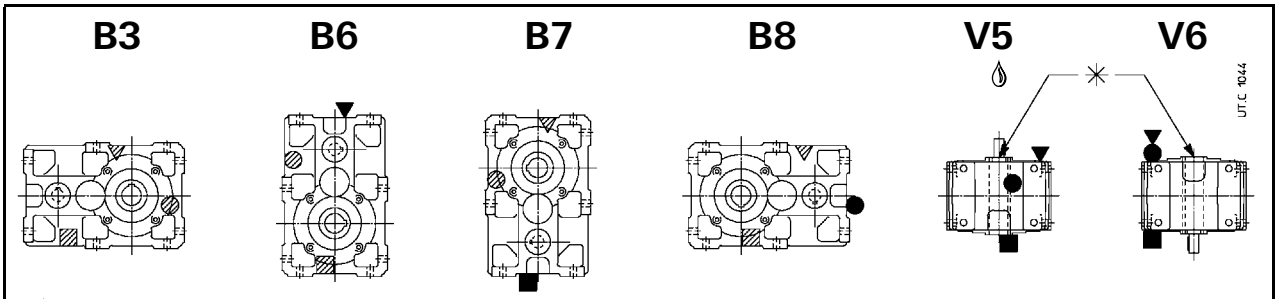

- Possible high speed lubrication device; when it is not present or there are no ducts, grease the bearing.
- * The upper bearings are greased.

▼ Oil filler plug (▽ not in view)
● Oil level plug (◍ not in view)
■ Oil drain plug (▨ not in view)

R 2I 140 ... 360

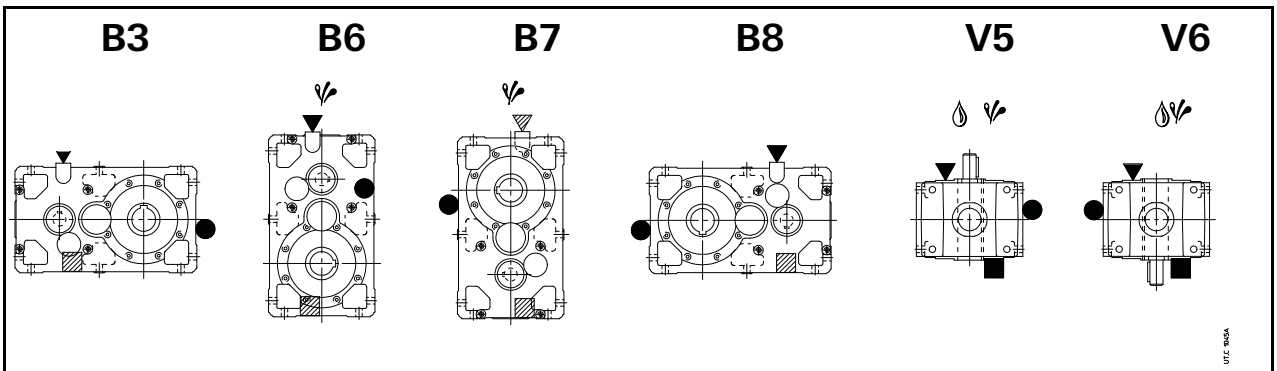

- Possible high speed lubrication device (V5) or bearing lubrication pump (V6); when it is not present or there are no ducts, the upper bearings are greased.
- Possible high oil splash: for the corrective factor ft_3 of nominal thermal power Pt_N see ch. 5.14.

▼ Oil filler plug (▽ not in view)
● Oil level plug (◍ not in view)
■ Oil drain plug (▨ not in view)

R 3I 100, 125

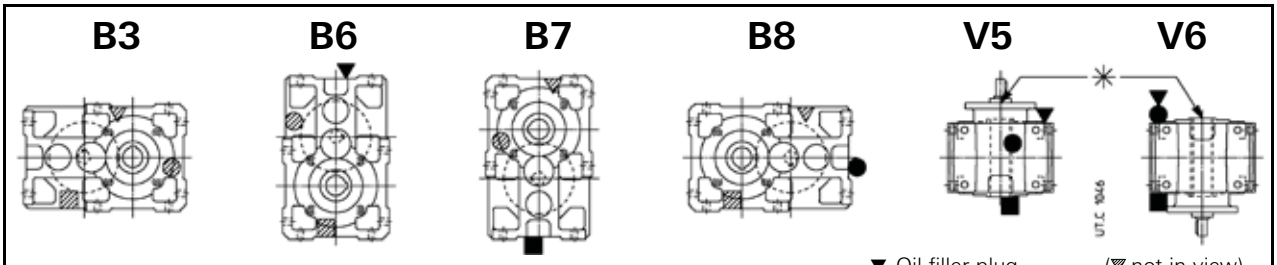

* Upper bearings greased (in mounting position V5 also high speed shaft bearing is greased)

▼ Oil filler plug (▽ not in view)
● Oil level plug (◍ not in view)
■ Oil drain plug (▨ not in view)

R 3I 140 ... 360

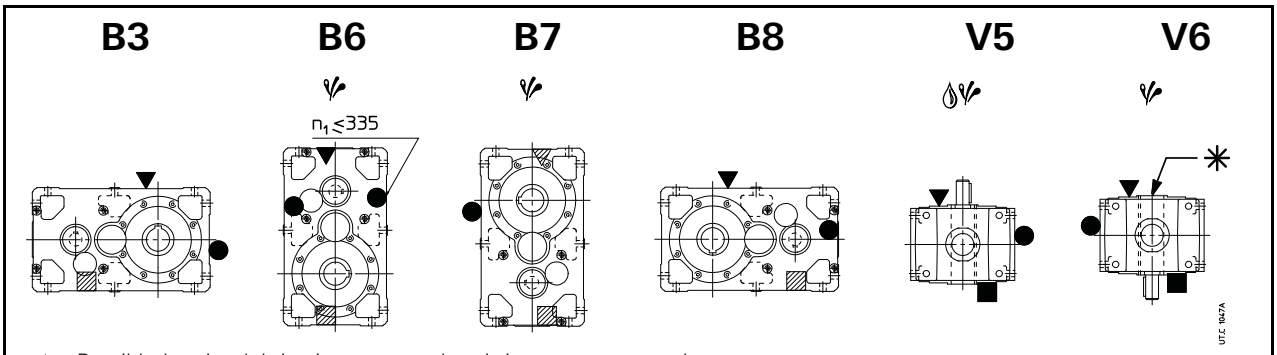

Possible bearing lubrication pump; when it is not present or there are no ducts, the upper bearings are greased.

Possible high oil splash: for corrective factor ft_3 of nominal thermal power Pt_N see ch. 5:14.

* The 2 bearings are greased.

▼ Oil filler plug (▽ not in view)
● Oil level plug (◍ not in view)
■ Oil drain plug (▨ not in view)

R CI 100

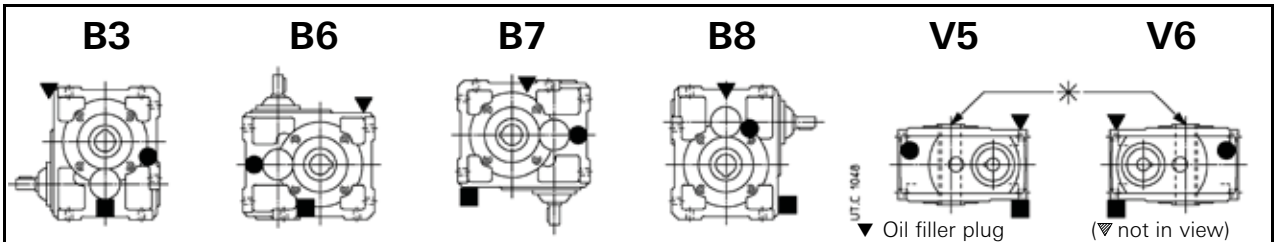

* The 2 upper bearings are greased.

▼ Oil filler plug (▽ not in view)
● Oil level plug (◍ not in view)
■ Oil drain plug (▨ not in view)

R CI 125 ... 360

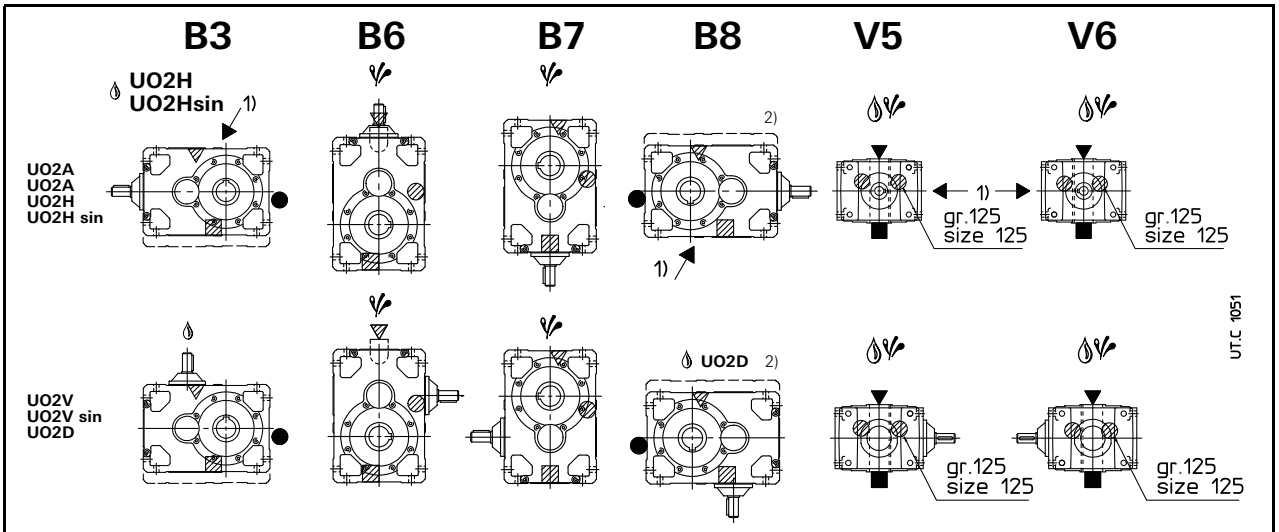

Possible bearing lubrication pump; when replacing grease of bearings (pollution, heavy duty, etc...) verify all upper bearings and fill with new grease after having removed the worn one.

Possible high oil splash: for corrective factor ft_3 of nominal thermal power Pt_N see ch. 5.14.

1) Position of tapped holes for identification of mountig position.

2) For sizes 140, 180, 225, 280, 360 see corrective factor ft_3 of the nominal thermal power Pt_N see ch. 5.14.

▼ Oil filler plug (▽ not in view)
● Oil level plug (◍ not in view)
■ Oil drain plug (▨ not in view)

R ICI 100 ... 200

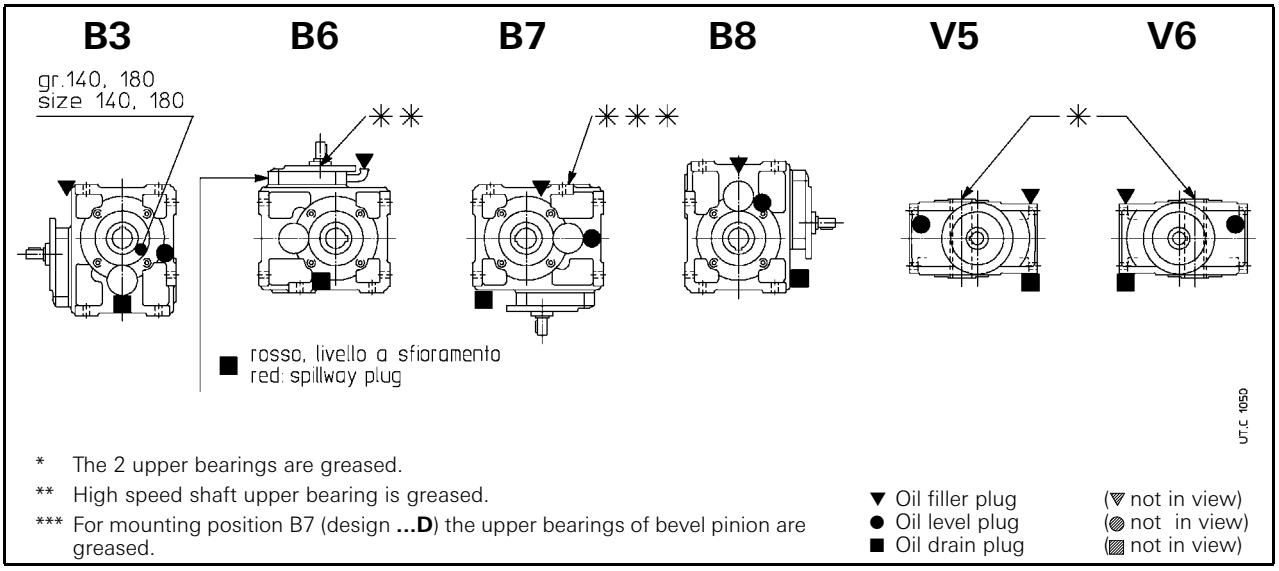

* The 2 upper bearings are greased.

** High speed shaft upper bearing is greased.

*** For mounting position B7 (design **...D**) the upper bearings of bevel pinion are greased.

▼ Oil filler plug (▽ not in view)
● Oil level plug (◍ not in view)
■ Oil drain plug (▨ not in view)

R C2I 140 ... 280

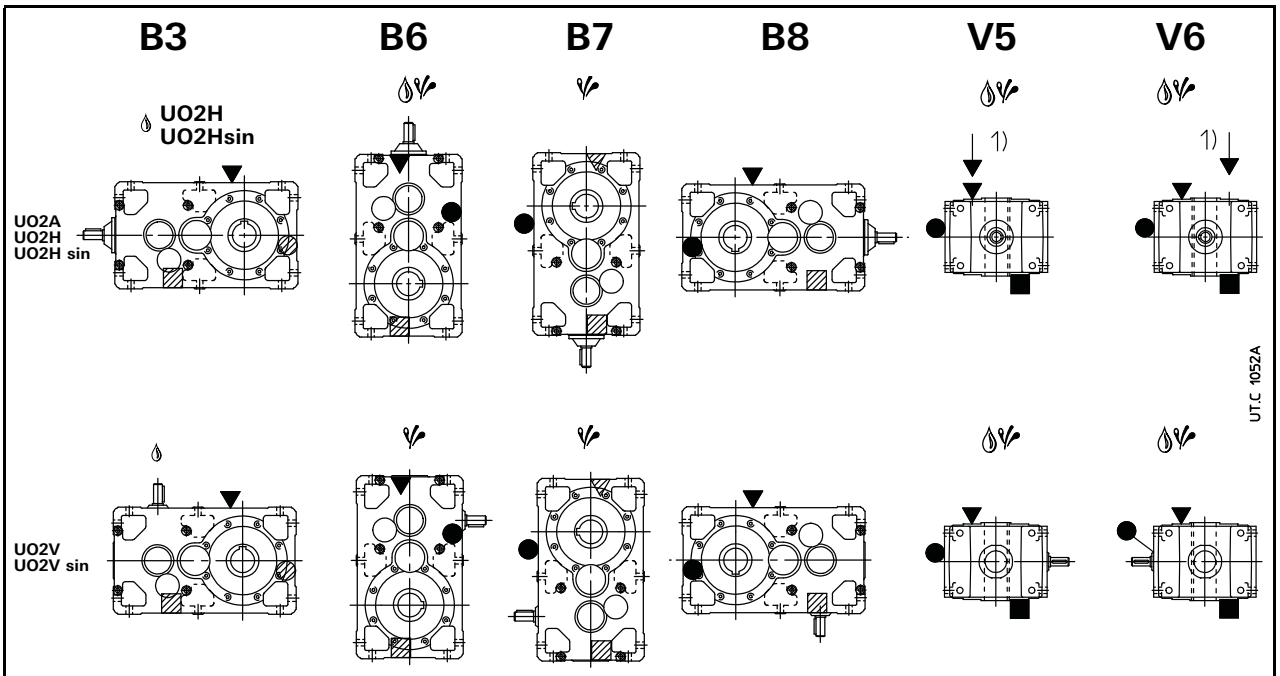

Possible bearing lubrication pump; when it is not present or there are no ducts, the upper bearings are greased.

Possible high oil splash: for corrective factor ft_3 of nominal thermal power Pt_N see ch. 5.14.

1) Position of the intermediate shaft hole for the identification of mounting position.

▼ Oil filler plug (▽ not in view)
● Oil level plug (◍ not in view)
■ Oil drain plug (▨ not in view)

MR 2I 100, 125

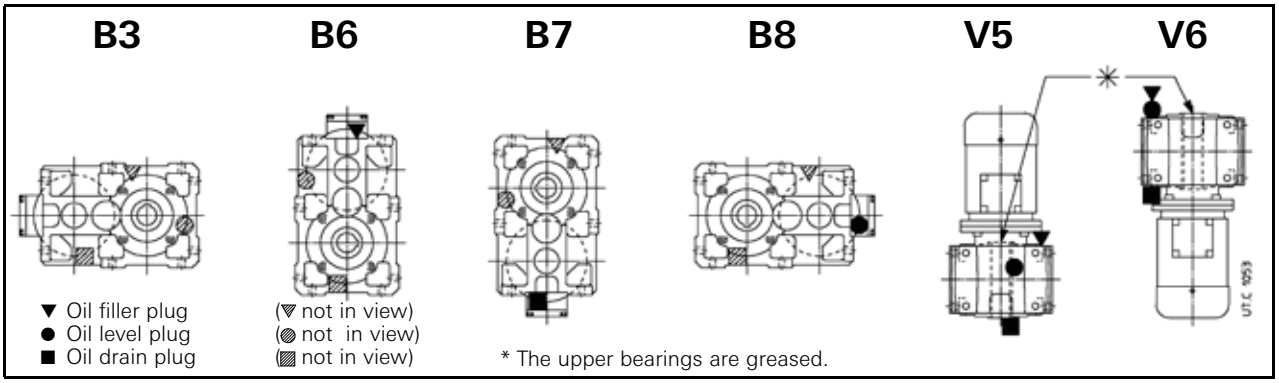

▼ Oil filler plug (▽ not in view)
● Oil level plug (◍ not in view)
■ Oil drain plug (▨ not in view)

* The upper bearings are greased.

MR 2I 140 ... 360

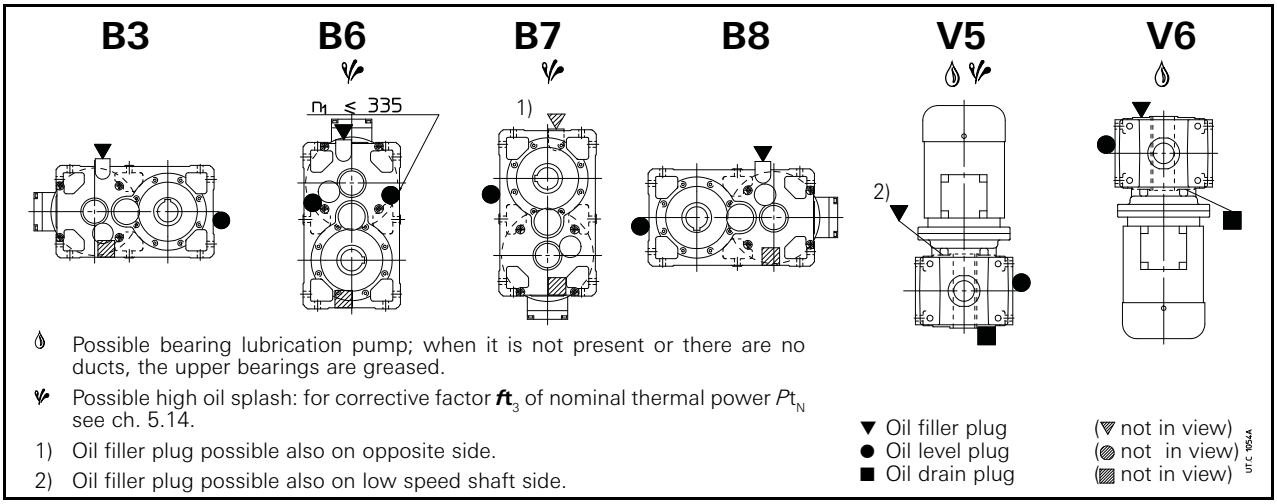

- Possible bearing lubrication pump; when it is not present or there are no ducts, the upper bearings are greased.
- Possible high oil splash: for corrective factor ft_3 of nominal thermal power Pt_N see ch. 5.14.
- 1) Oil filler plug possible also on opposite side.
- 2) Oil filler plug possible also on low speed shaft side.

▼ Oil filler plug (▽ not in view)
● Oil level plug (◍ not in view)
■ Oil drain plug (▨ not in view)

MR 3I 100, 125

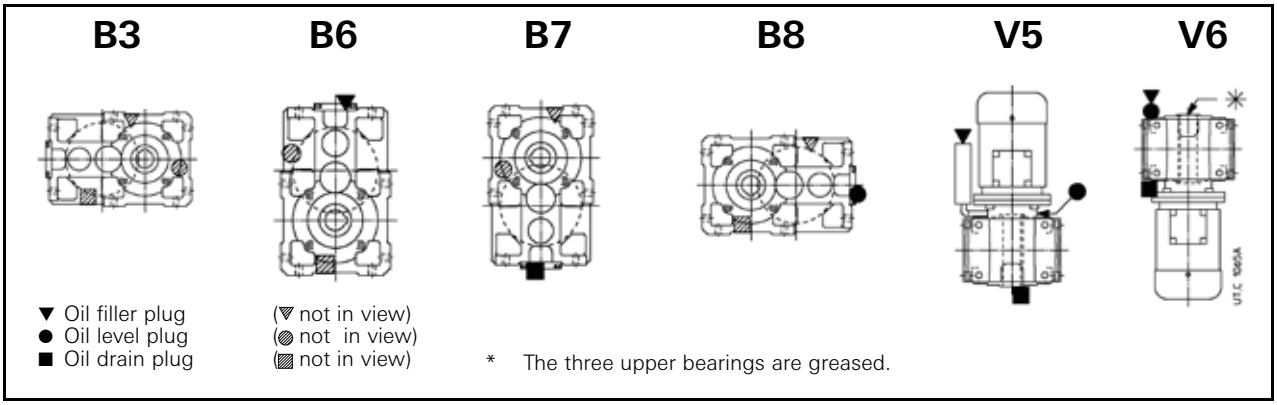

▼ Oil filler plug (▽ not in view)
● Oil level plug (◍ not in view)
■ Oil drain plug (▨ not in view)

* The three upper bearings are greased.

MR 3I 140 ... 360

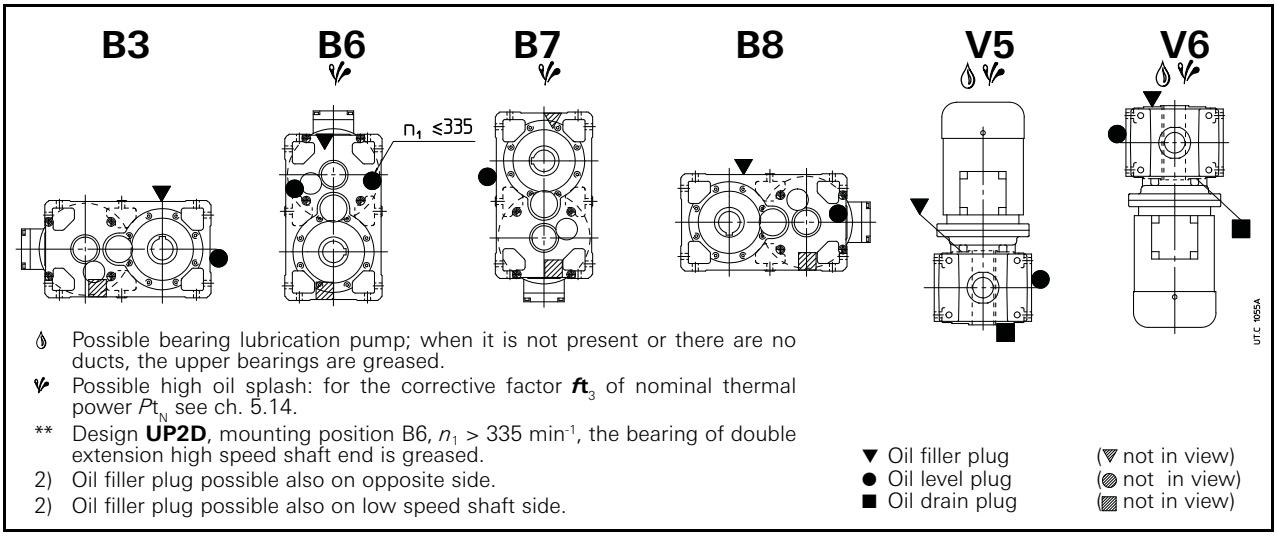

- Possible bearing lubrication pump; when it is not present or there are no ducts, the upper bearings are greased.
- Possible high oil splash: for the corrective factor ft_3 of nominal thermal power Pt_N see ch. 5.14.
- ** Design **UP2D**, mounting position B6, n_1 > 335 min^{-1}, the bearing of double extension high speed shaft end is greased.
- 2) Oil filler plug possible also on opposite side.
- 2) Oil filler plug possible also on low speed shaft side.

▼ Oil filler plug (▽ not in view)
● Oil level plug (◍ not in view)
■ Oil drain plug (▨ not in view)

MR 4I 100, 125

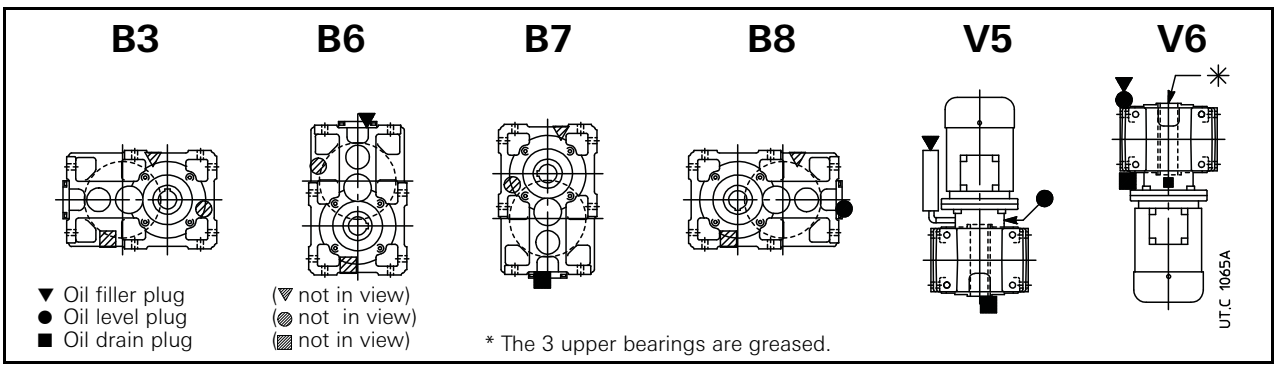

▼ Oil filler plug (▽ not in view)
● Oil level plug (◍ not in view)
■ Oil drain plug (▨ not in view)

* The 3 upper bearings are greased.

MR CI 100

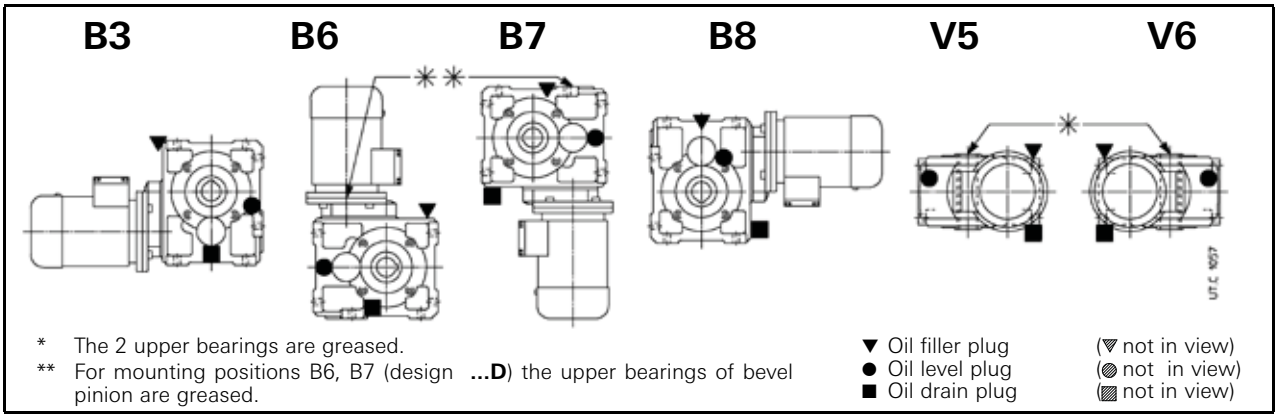

* The 2 upper bearings are greased.
** For mounting positions B6, B7 (design **...D**) the upper bearings of bevel pinion are greased.

▼ Oil filler plug (▽ not in view)
● Oil level plug (◍ not in view)
■ Oil drain plug (▨ not in view)

MR CI 125 ... 280

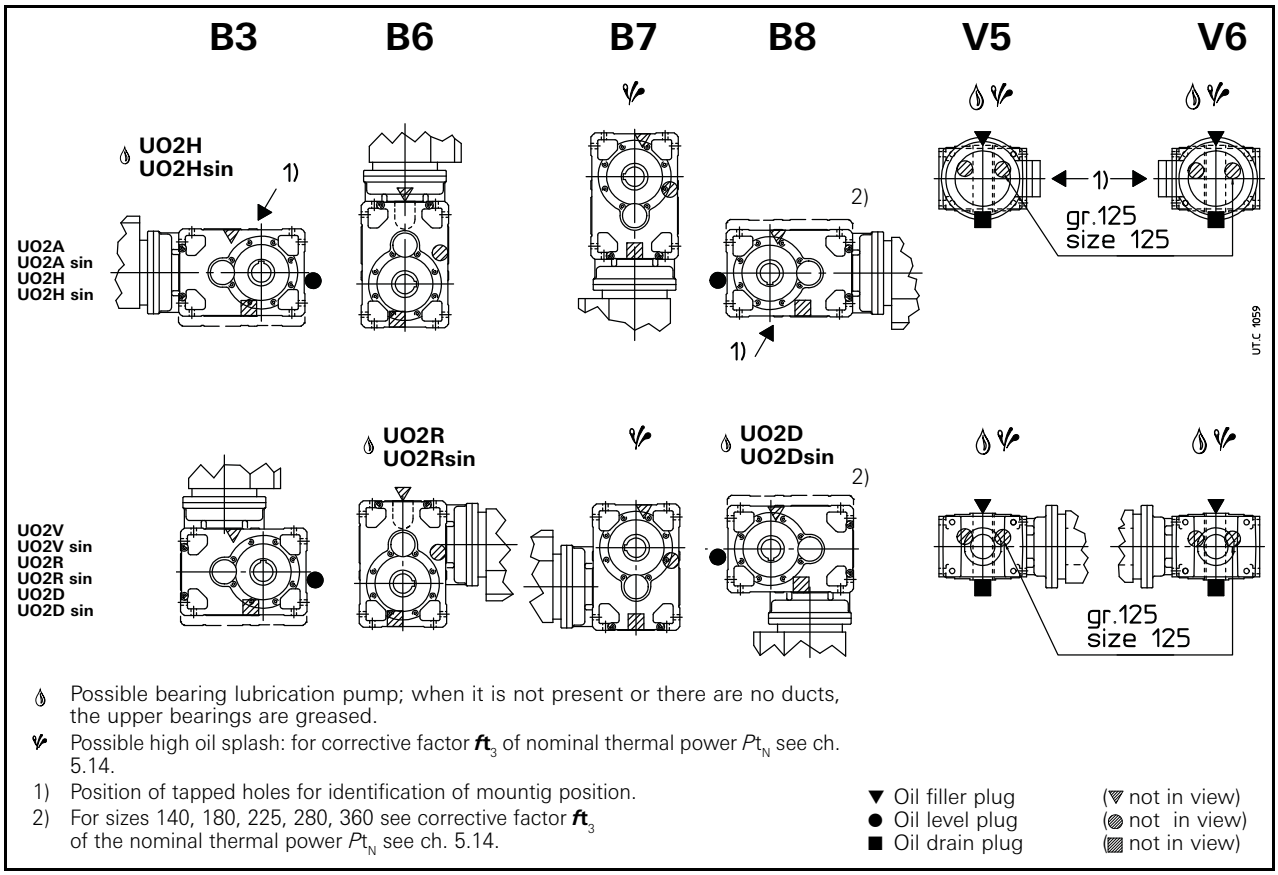

Possible bearing lubrication pump; when it is not present or there are no ducts, the upper bearings are greased.

Possible high oil splash: for corrective factor ft_3 of nominal thermal power Pt_N see ch. 5.14.

1) Position of tapped holes for identification of mountig position.

2) For sizes 140, 180, 225, 280, 360 see corrective factor ft_3 of the nominal thermal power Pt_N see ch. 5.14.

▼ Oil filler plug (▽ not in view)
● Oil level plug (◍ not in view)
■ Oil drain plug (▨ not in view)

MR ICI 100 ... 200

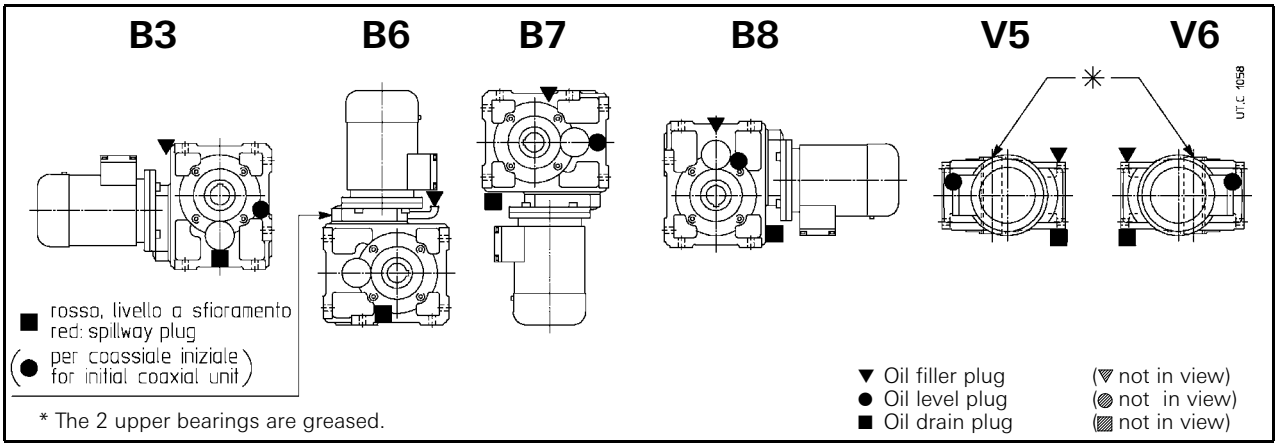

* The 2 upper bearings are greased.

▼ Oil filler plug (▽ not in view)
● Oil level plug (◍ not in view)
■ Oil drain plug (▨ not in view)

MR C2I 140 ... 360

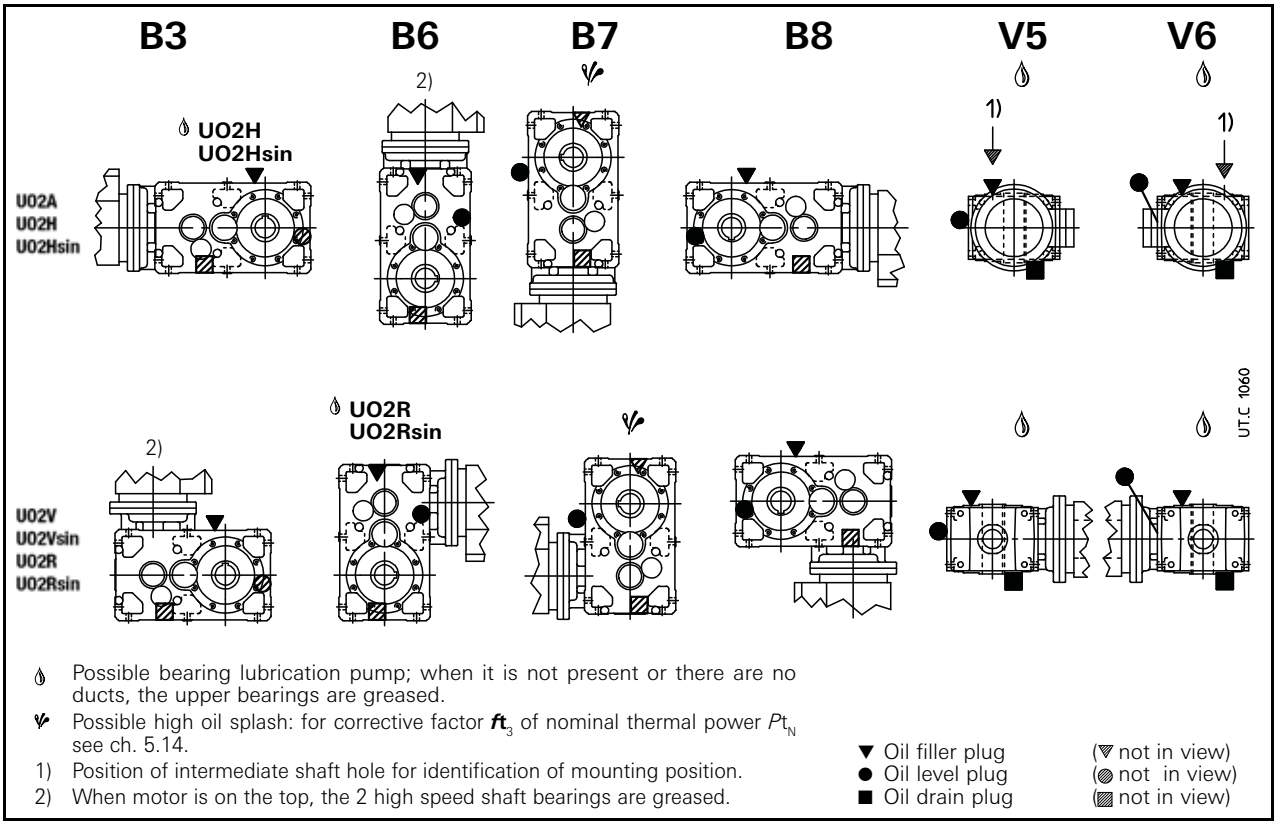

Possible bearing lubrication pump; when it is not present or there are no ducts, the upper bearings are greased.

Possible high oil splash: for corrective factor ft_3 of nominal thermal power Pt_N see ch. 5.14.

1) Position of intermediate shaft hole for identification of mounting position.

2) When motor is on the top, the 2 high speed shaft bearings are greased.

▼ Oil filler plug (▽ not in view)
● Oil level plug (◍ not in view)
■ Oil drain plug (▨ not in view)

MR C3I 100, 125

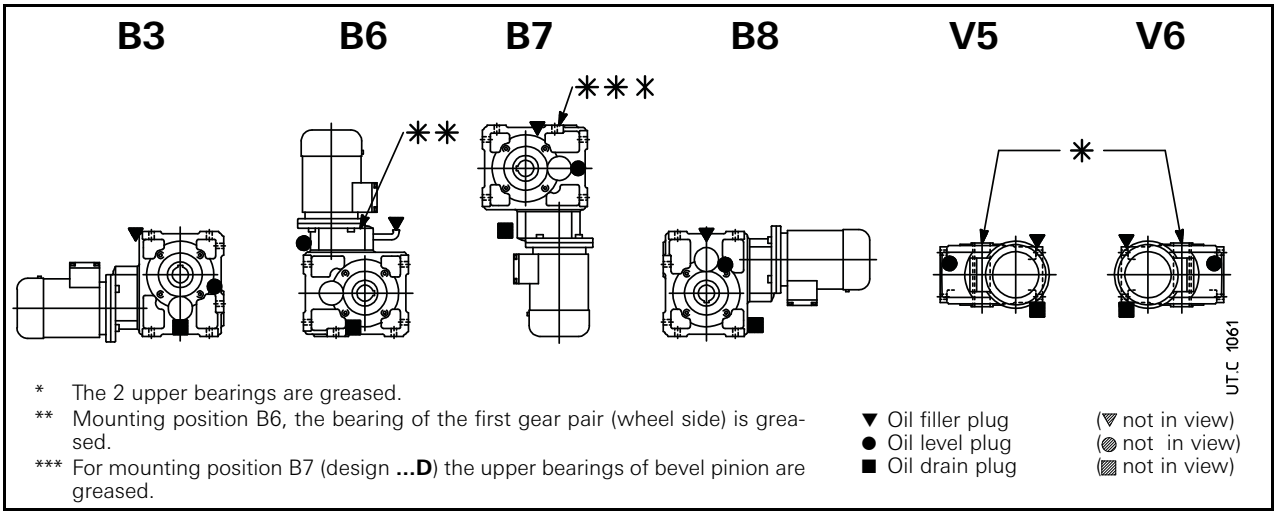

* The 2 upper bearings are greased.

** Mounting position B6, the bearing of the first gear pair (wheel side) is greased.

*** For mounting position B7 (design **...D**) the upper bearings of bevel pinion are greased.

▼ Oil filler plug (▽ not in view)
● Oil level plug (◍ not in view)
■ Oil drain plug (▨ not in view)

16 - H (H02) Series - Mounting positions, oil quantity and position of plugs

For oil levels and position of plugs see attached SPT sketch

Before commissioning, check lubricant level.

R 2I 4000 ... 6301 (400 ... 631)

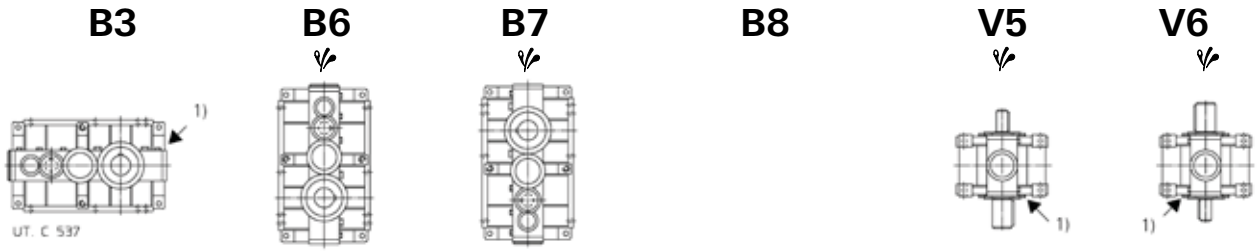

Possible high oil splash: for corrective factor ft_3 of nominal thermal power Pt_N see ch. 5.14.

1) Mounting position **B3** may be identified from the position of the screw-heads as arrowed. The same applies for V5 and V6 with double extension or hollow low speed shaft.

R 3I 4000 ... 6301 (400 ... 631)

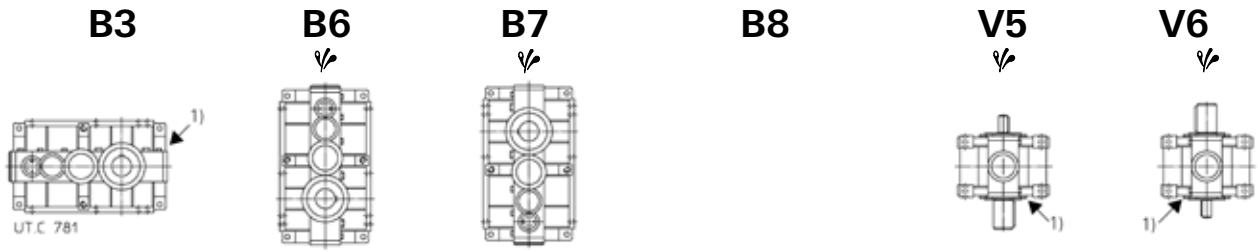

Possible high oil splash: for corrective factor ft_3 of nominal thermal power Pt_N see ch. 5.14.

1) Mounting position **B3** may be identified from the position of the screw-heads as arrowed. The same applies for V5 and V6 with double extension or hollow low speed shaft.

R 4I 4000 ... 6301 (400 ... 631)

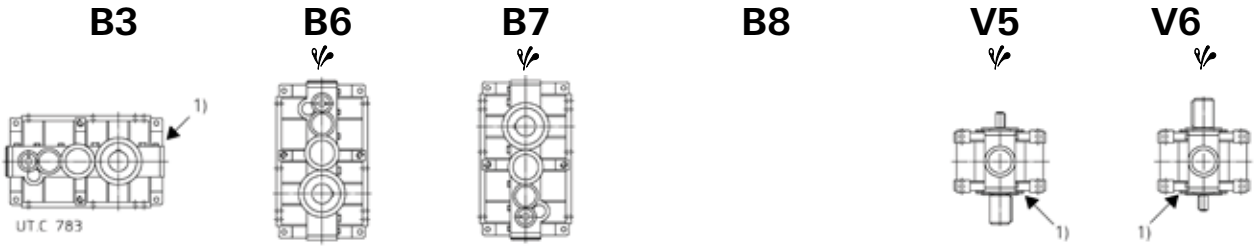

Possible high oil splash: for corrective factor ft_3 of nominal thermal power Pt_N see ch. 5.14.

1) Mounting position **B3** may be identified from the position of the screw-heads as arrowed. The same applies for V5 and V6 with double extension or hollow low speed shaft.

R CI 4000 ... 4501 (400 ... 451)

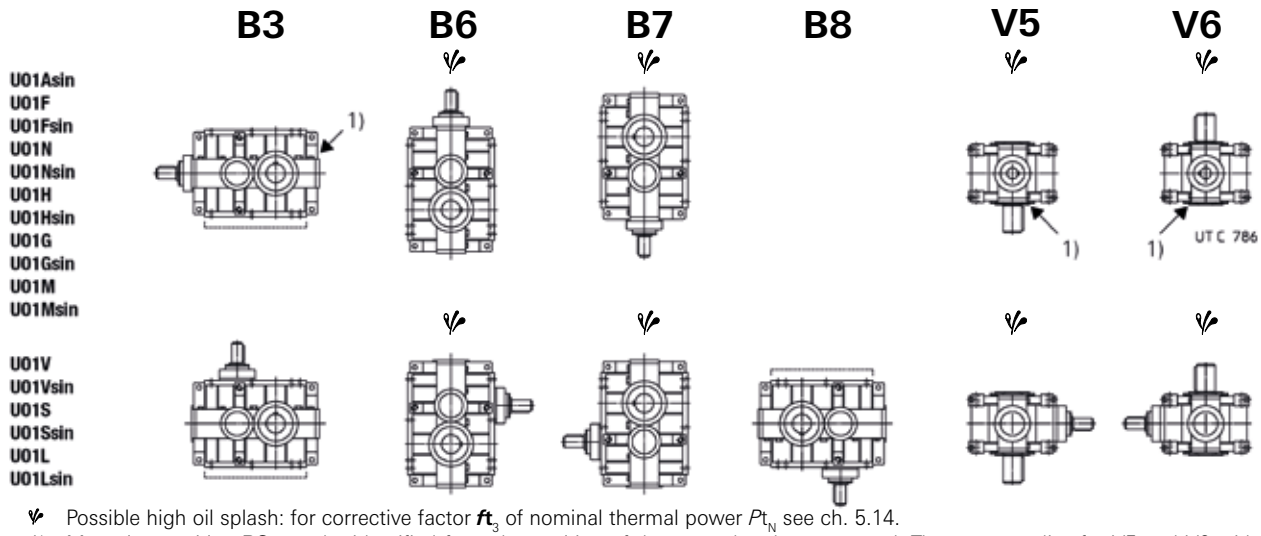

Possible high oil splash: for corrective factor ft_3 of nominal thermal power Pt_N see ch. 5.14.

1) Mounting position **B3** may be identified from the position of the screw-heads as arrowed. The same applies for V5 and V6 with double extension or hollow low speed shaft.

R C2I 4000 ... 6301 (400 ... 631)

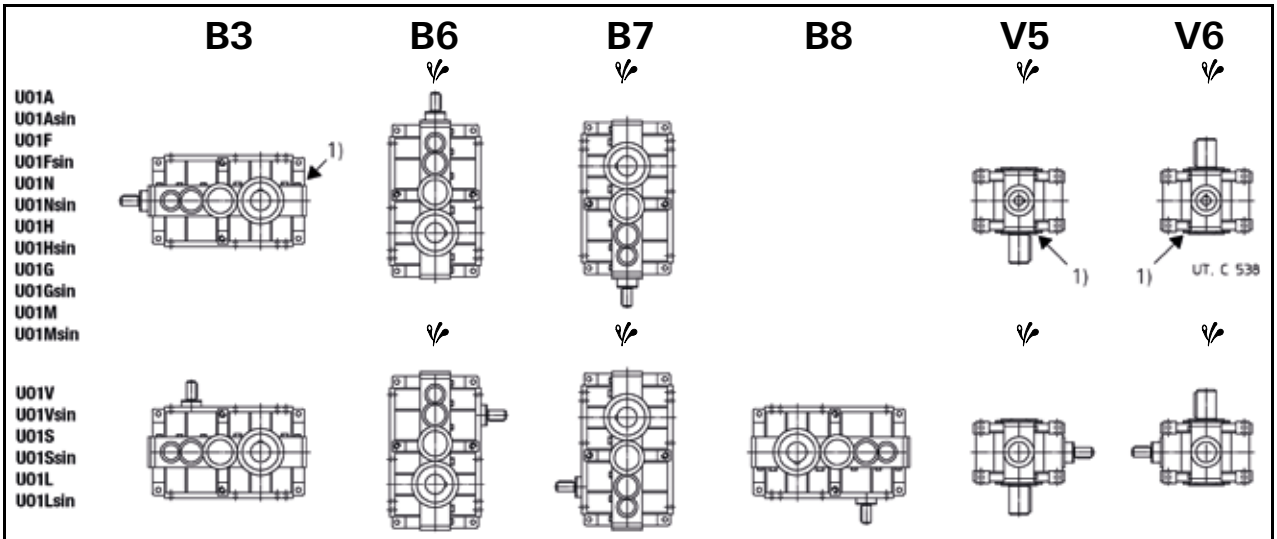

Possible high oil splash: for corrective factor ft_3 of nominal thermal power Pt_N see ch. 5.14.

1) Mounting position **B3** may be identified from the position of the screw-heads as arrowed. The same applies for V5 and V6 with double extension or hollow low speed shaft.

R C3I 4000 ... 6301 (400 ... 631)

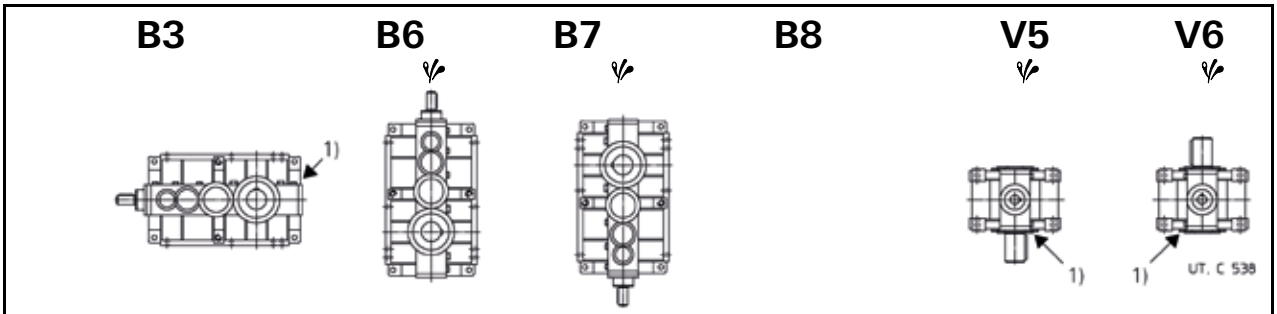

Possible high oil splash: for corrective factor ft_3 of nominal thermal power Pt_N see ch. 5.14.

1) Mounting position **B3** may be identified from the position of the screw-heads as arrowed. The same applies for V5 and V6 with double extension or hollow low speed shaft.

Page intentionally left blank

Rossi S.p.A.
Via Emilia Ovest, 915/A
41123 Modena – ITALY
Tel. +39 059 33 02 88
Fax +39 059 82 77 74
info@rossi.com
www.rossi.com

Declaration of conformity

to the European Community Directive

ATEX 2014/34/EU

The manufacturer:	**Rossi S.p.A.** Via Emilia Ovest 915/A 41123 Modena - Italia
declare under their own responsibility that the **gear reducers** and **gearmotors** (without motor) including combined units of the **modular series**:	**A (A04)** **E (E04)** (except sizes 32, 40, 41) **G** **H (H02)**
with design:	**II 2GD c, b, k** **II 2GD c, k**
are in compliance with the **Directive ATEX**:	**2014/34/EU**
Harmonized Standards applied:	UNI EN 1127-1 (2011) UNI EN 13463-1 (2009) UNI EN 13463-5 (2011) UNI EN 13463-6 (2005) UNI EN 13463-8 (2003)

The technical documentation, according to the Annex VIII of the Directive ATEX 2014/34/EU, is registered at **TÜV NORD Italia S.r.l Sede di Legnano** via Pisacane n. 46, 20025 Legnano (MI) Italy, with identification number: **8000314160**

Modena **16/04/2018**

Ing. Vittoriano Zanotti
Chief Engineering & Operation Officer

doc. UT.D **128** rev. 7

Rossi S.p.A.
Via Emilia Ovest, 915/A
41123 Modena – ITALY
Tel. +39 059 33 02 88
Fax +39 059 82 77 74
info@rossi.com
www.rossi.com

Declaration of conformity

to the European Community Directive

ATEX 2014/34/EU

The manufacturer:	**Rossi S.p.A.** Via Emilia Ovest 915/A 41123 Modena - Italia
declare under their own responsibility that the **gear reducers** and **gearmotors** (without motor) including combined units of the **modular series**:	**A (A04)** **E (E04)** (except sizes 32, 40, 41) **G** **H (H02)**
with design:	**II 2G c, b, k** **II 2G c, k**
are in compliance with the **Directive ATEX**:	**2014/34/EU**
Harmonized Standards applied:	UNI EN 1127-1 (2011) UNI EN 13463-1 (2009) UNI EN 13463-5 (2011) UNI EN 13463-6 (2005) UNI EN 13463-8 (2003)

The technical documentation, according to the Annex VIII of the Directive ATEX 2014/34/EU, is registered at **TÜV NORD Italia S.r.l Sede di Legnano** via Pisacane n. 46, 20025 Legnano (MI) Italy, with identification number: **8000314160**

Modena **16/04/2018**

Ing. Vittoriano Zanotti
Chief Engineering & Operation Officer

doc. UT.D **129** rev. 7

Rossi S.p.A.
Via Emilia Ovest, 915/A
41123 Modena – ITALY
Tel. +39 059 33 02 88
Fax +39 059 82 77 74
info@rossi.com
www.rossi.com

Declaration of conformity

to the European Community Directive

ATEX 2014/34/EU

The manufacturer:	**Rossi S.p.A.** Via Emilia Ovest 915/A 41123 Modena - Italia
declare under their own responsibility that the **gear reducers** and **gearmotors** (without motor) including combined units of the **modular series**:	**A (A04)** **E (E04)** (except sizes 32, 40, 41) **G** **H (H02)**
with design:	**II 3GD c, b, k** **II 3GD c, k**
are in compliance with the **Directive ATEX**:	**2014/34/EU**
Harmonized Standards applied:	UNI EN 1127-1 (2011) UNI EN 13463-1 (2009) UNI EN 13463-5 (2011) UNI EN 13463-6 (2005) UNI EN 13463-8 (2003)

The technical documentation, according to the Annex VIII of the Directive ATEX 2014/34/EU, is registered at **TÜV NORD Italia S.r.l Sede di Legnano** via Pisacane n. 46, 20025 Legnano (MI) Italy, with identification number: **8000314160**

Modena **16/04/2018**

Ing. Vittoriano Zanotti
Chief Engineering & Operation Officer

doc. UT.D **130** rev. 7

Rossi S.p.A.
Via Emilia Ovest, 915/A
41123 Modena – ITALY
Tel. +39 059 33 02 88
Fax +39 059 82 77 74
info@rossi.com
www.rossi.com

Declaration of conformity

to the European Community Directive

ATEX 2014/34/EU

The manufacturer:	**Rossi S.p.A.** Via Emilia Ovest 915/A 41123 Modena - Italia
declare under their own responsibility that the **gear reducers** and **gearmotors** (without motor) including combined units of the **modular series**:	**A (A04)** **E (E04)** (except sizes 32, 40, 41) **G**
with design:	**II 2GD c, b, k** **II 2GD c, k**
coupled to[1] **electric motors** with design:	**II 2G EEx e** (zone 1) **II 2G EEx d** (zone 1) **II 2G EEx de** (zone 1) **II 2D IP65** (zone 21)
are in compliance with the **Directive ATEX**[2]:	**2014/34/EU**
Harmonized Standards applied:	UNI EN 1127-1 (2011)

1) According to manufacturing program of the relevant catalogs.
2) For the electric motor, purchased from third parties and provided by Rossi, refer to the declaration of conformity of the manufacturer.

The technical documentation, according to the Annex VIII of the Directive ATEX 2014/34/EU, is registered at **TÜV NORD Italia S.r.l Sede di Legnano** via Pisacane n. 46, 20025 Legnano (MI) Italy, with identification number: **8000314160**

Modena **16/04/2018**

Ing. Vittoriano Zanotti
Chief Engineering & Operation Officer

doc. UT.D **180** rev. 3

Rossi S.p.A.
Via Emilia Ovest, 915/A
41123 Modena – ITALY
Tel. +39 059 33 02 88
Fax +39 059 82 77 74
info@rossi.com
www.rossi.com

Declaration of conformity

to the European Community Directive

ATEX 2014/34/EU

The manufacturer:	**Rossi S.p.A.** Via Emilia Ovest 915/A 41123 Modena - Italia
declare under their own responsibility that the **gear reducers** and **gearmotors** (without motor) including combined units of the **modular series**:	**A (A04)** **E (E04)** (except sizes 32, 40, 41) **G**
with design:	**II 2G c, b, k** **II 2G c, k**
coupled to[1] **electric motors** with design:	**II 2G EEx e** (zone 1) **II 2G EEx d** (zone 1) **II 2G EEx de** (zone 1)
are in compliance with the **Directive ATEX**[2]:	**2014/34/EU**
Harmonized Standards applied:	UNI EN 1127-1 (2011)

1) According to manufacturing program of the relevant catalogs.
2) For the electric motor, purchased from third parties and provided by Rossi, refer to the declaration of conformity of the manufacturer.

The technical documentation, according to the Annex VIII of the Directive ATEX 2014/34/EU, is registered at **TÜV NORD Italia S.r.l Sede di Legnano** via Pisacane n. 46, 20025 Legnano (MI) Italy, with identification number: **8000314160**

Modena **16/04/2018**

Ing. Vittoriano Zanotti
Chief Engineering & Operation Officer

doc. UT.D **181** rev. 3

Rossi S.p.A.
Via Emilia Ovest, 915/A
41123 Modena – ITALY
Tel. +39 059 33 02 88
Fax +39 059 82 77 74
info@rossi.com
www.rossi.com

Declaration of conformity

to the European Community Directive

ATEX 2014/34/EU

The manufacturer:	**Rossi S.p.A.** Via Emilia Ovest 915/A 41123 Modena - Italia
declare under their own responsibility that the **gear reducers** and **gearmotors** (without motor) including combined units of the **modular series**:	**A (A04)** **E (E04)** (except sizes 32, 40, 41) **G**
with design:	**II 3GD c, b, k** **II 3GD c, k**
coupled to[1] **electric motors** with design:	**II 3G EEx n** (zone 2) **II 3D IP65** (zone 22)
are in compliance with the **Directive ATEX**[2]:	**2014/34/EU**
Harmonized Standards applied:	UNI EN 1127-1 (2011)

1) According to manufacturing program of the relevant catalogs.
2) For the electric motor, purchased from third parties and provided by Rossi, refer to the declaration of conformity of the manufacturer.

The technical documentation, according to the Annex VIII of the Directive ATEX 2014/34/EU, is registered at **TÜV NORD Italia S.r.l Sede di Legnano** via Pisacane n. 46, 20025 Legnano (MI) Italy, with identification number: **8000314160**

Modena **16/04/2018**

Ing. Vittoriano Zanotti
Chief Engineering & Operation Officer

doc. UT.D **182** rev. 3

Index of revisions

ATEX Operating instructions - Edition May 2017

page 7 updated table 3.4.1 Painting

page 24 updated table 5.14.1a Nominal thermal power Pt_N

page 26 updated table 5.14.7 Thermal factor ft_{ATEX} according to ATEX gear reducer design

page 27 updated table 5.14.4 Thermal factor ft_3 according to mounting position

page 36 updated paragraph 9.2 (Oil and bearing) temperatura probe

page 41 updated paragraph 11.1 General

page 42 updated paragraph 11.4 Seal rings

page 43 cancelled paragraph Hollow low speed shaft

page 48 updated table 13.1.1 Oil level (dimension x) and quantity

page 52 updated paragraph 14.2 Mounting positions and plug position for coaxial gear reducers and gearmotors

page 53 upated paragraph 15.1 Oil levels (quantity) for helical and bevel helical gear reducers and gearmotors

pages 55-59 updated drawings paragraph 15.2 Mounting positions and plug positions for helical and bevel helical gear reducers and gearmotors

ATEX Operating instructions - Edition April 2018

Introduced H (H02) series

page 16 updated table 5.6.1 with introduction of hollow low speed shaft diameters sizes 200 ... 310

page 17 updated fig. 5.8.3 with introduction of axial fastening for helical and bevel-helical gear units sizes 4000 (400) ... 6301 (631)

page 23 updated tab. 5.13.6 concerning ATEX service factor

page 29 re-organized and updated lubrication table at paragraph 6.2

page 35 updated tab. 9.1.1 concerning heaters

pages 64-69 updated declarations of conformity

Every decision we make at Rossi impacts the world we live in. But new technologies and renewed commitment to sustainable practices have provided us with the opportunity to make environmentally friendly printing decisions. Our catalogs are printed on Forest Stewardship Council® (FSC®) certified paper [1]. This is our tangible commitment in terms of environment sustainability.

[1] The certification means that finished wood-based products in the marketplace have been handled by companies that have also been certified and that the paper has been handled in an environmentally-friendly manner.

Australia

Rossi Gearmotors Australia Pty. Ltd.
e-mail: info.australia@rossi.com
www.rossi.com/australia

Benelux

Rossi BeNeLux B.V.
e-mail: info.benelux@rossi.com
www.rossi.com/benelux

Brazil

Rossi do Brasil LTDA
e-mail: info.brazil@rossi.com
www.rossi.com/brazil

Canada

Rossi North America
e-mail: info.canada@rossi.com
www.rossi.com/canada

China

Rossi Gearmotors P.T.I. (Shanghai) Co., Ltd.
e-mail: info.china@rossi.com
www.rossi.com/china

France

Rossi Motoréducteurs SARL
e-mail: info.france@rossi.com
www.rossi.com/france

Germany

Rossi GmbH
e-mail: info.germany@rossi.com
www.rossi.com/germany

India

Rossi Gearmotors Pvt. Ltd.
e-mail: info.india@rossi.com
www.rossi.com/india

Malaysia

Rossi Gearmotors South East Asia Sdn Bhd
e-mail: info.malaysia@rossi.com
www.rossi.com/malaysia

Poland

Rossi Polska Sp.z o.o.
e-mail: info.poland@rossi.com
www.rossi.com/poland

Spain, Portugal

Rossi Motorreductores S.L.
e-mail: info.spain@rossi.com
www.rossi.com/spain

South Africa

Rossi Southern Africa
e-mail: info.southafrica@rossi.com
www.rossi.com/southafrica

Taiwan

Rossi Gearmotors Co. Ltd.
e-mail: info.taiwan@rossi.com
www.rossi.com/taiwan

Turkey

Rossi Turkey & Middle East
e-mail: info.turkey@rossi.com
www.rossi.com/turkey

United Kingdom

Rossi Gearmotors Ltd.
e-mail: info.uk@rossi.com
www.rossi.com/uk

United States

Rossi North America
e-mail: info.northamerica@rossi.com
www.rossi.com/northamerica

Global Service

Rossi S.p.A.
e-mail: aftersales@rossi.com

Product liability, application considerations

The Customer is responsible for the correct selection and application of product in view of its industrial and/or commercial needs, unless the use has been recommended by technical qualified personnel of Rossi, who were duly informed about customer's application purposes. In this case all the necessary data required for the selection shall be communicated exactly and in writing by the Customer, stated in the order and confirmed by Rossi. The Customer is always responsible for the safety of product applications. Every care has been taken in the drawing up of the catalog to ensure the accuracy of the information contained in this publication, however Rossi can accept no responsibility for any errors, omissions or outdated data. Due to the constant evolution of the state of the art, Rossi reserves the right to make any modification whenever to this publication contents. The responsibility for the product selection is of the customer, excluding different agreements duly legalized in writing and undersigned by the Parties.

Rossi S.p.A.

Via Emilia Ovest 915/A
41123 Modena - Italy
Phone +39 059 33 02 88
fax +39 059 82 77 74
e-mail: info@rossi.com
www.rossi.com

Registered trademarks
Copyright Rossi S.p.A.
Subject to alterations

Printed in Italy
UTD.123.04-2018.00_EN