PCM Keep it moving

INSTRUCTION MANUAL

KEEP THIS DOCUMENT FOR FURTHER REFERENCE

DOSING UNIT

Serie	**DACC SMB**
Type	**DACC 072/100-023 SMB100 BH**
Ref GPIC	**ED0920-040**
Serial number	
Year of manufacturing	

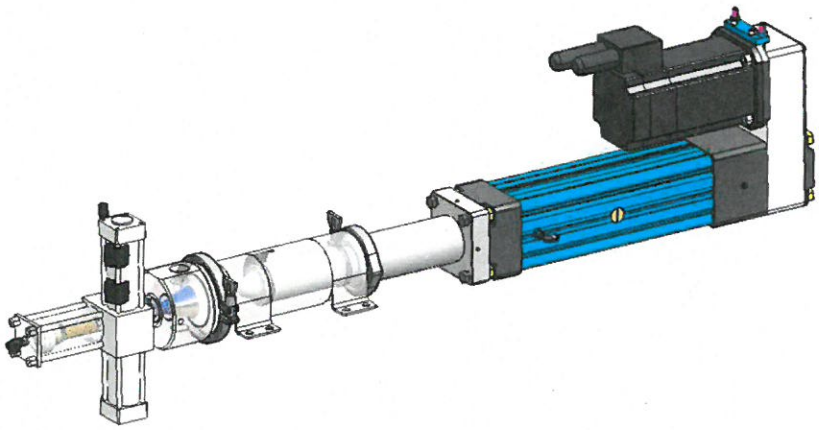

Issued date: November 2007

PCM -17 rue Ernest Laval BP 35 - 92173 Vanves Cedex France
Phone : +33 (0)1 41 08 15 15 – Fax : +33 (0)1 41 08 15 00
www.pcm.eu - contact@pcm.eu

PCM

STATEMENT OF INCORPORATION

THE MANUFACTURER : PCM
Site de Rambouillet
10, rue Mège Mouries
ZA du bel Air
78513 RAMBOUILLET – France -
Tel. : (+33) 1 30 46 50 00
Fax : (+33) 1 30 59 88 02

States that this machine has been manufactured in accordance with the provisions of EEC Directive 98/37/EC and the national transposition provisions without attaining the objectives of that directive regarding the following points:

DOSING UNIT

As PCM cannot control the environment in the vicinity of the pressure and suction orifices, we cannot guarantee the safety of operating personnel regarding these items.

ANY RISK OF INJURY NEAR THE PRESSURE AND SUCTION ORIFICES OF DOSING UNITS IS ELIMINATED ONCE THE PIPES ARE CONNECTED.

It is therefore forbidden to set up and operate these units as long as the machines in which they are intended to be installed have not been declared in conformity with the provisions of directive 98/37/EC, which integrates all the provisions of European Directives 89/392/EEC 91/368/EEC et 93/44/EEC transposed into French law by decrees 92/765, 92/766 and 92/767.
This machine concerned by para 1 of article R233-83 of the Labour Code, having been subject to regulatory provisions when it was designed, is subject to the technical design and manufacturing rules defined in Appendix I as provided for by article R233-84 of the Labour Code.
This machine is in compliance with the Electromagnetic Compatibility (EMC) directive 89/336/EEC amended by 91/263/EEC and 93/68/EEC, with the Low Voltage directive (LVD) 73/23/EEC and with the following European Standards: EN 292; EN294; EN60204-1.

Signed in Rambouillet,
on May 2007

M.VULLIN
TECHNICAL MANAGER

CONTENTS

0. INTRODUCTION

0.1 General

The equipment that you have acquired has been produced and checked with the greatest possible care.

This instruction manual contains essential information regarding the assembly, use and maintenance of the equipment. It must be made available to operating and servicing staff.

The information contained in this manual cannot be reproduced or published in any form whatever, printed, photographed, copied onto microfilm or by any other means (electronic or mechanical) without the prior written approval of PCM.

The information provided in this document may be subject to modification without notice. PCM or its representatives cannot be held liable for any damage which may result from the use of this manual. This exemption from liability applies to damage of any kind, including (without limitation) direct or indirect compensatory damages, loss of data, income or profits, losses and damages caused to the property of third-parties and claims from third parties. PCM or its representatives accept no responsibility for and do not warrant the accuracy, the completeness or the updatedness of the information contained in this manual.

Markings

The equipment is identified by the following plate:

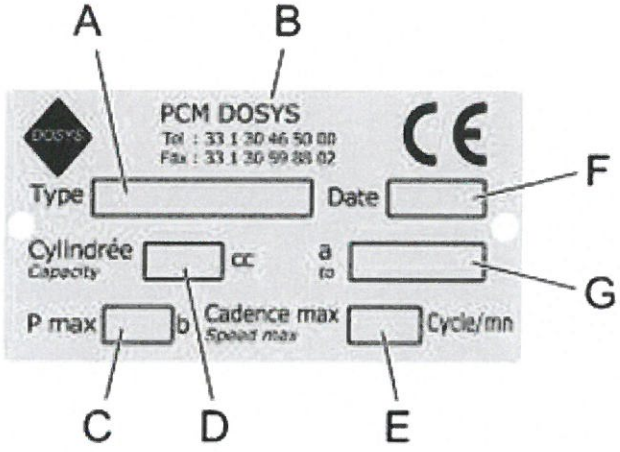

Key	Description
A	Type of equipment
B	PCM contact details
C	Maximum back pressure in bars
D	Minimum dosing capacity
E	Maximum working rate in cycles/min.
F	Date of manufacture
G	Maximum dosing capacity

When spare parts are ordered, it is essential to tell PCM the type of equipment (**A**) and the date (**F**).

Before start-up

The equipment must not be started before the operating staff have read the instruction manual carefully and have familiarised themselves with all its details.

0.2 Limits of warranty

To avoid any risk of damage or accident, it is essential to refrain from using this equipment for other application than that for which it is intended (see chapter "Utilization characteristics").

The pipes in your system must not contain filings or foreign bodies which could damage the dosing unit.

It is essential to use only PCM original parts, in order to maintain the original qualities of the equipment, continue to benefit from the warranty, and ensure that the machine continues to comply with the Directive.

0.3 Safety and Environment

Risk of injury

When the pipes are connected, there are no moving parts outside the dosing unit.

However, when the suction and pressure pipes are disconnected, it is extremely dangerous to introduce fingers into the valve, whose function is to obtain a clean cut during rotation. Labels should be placed on the machine to warn about this danger.

Risk of burns

During cleaning and sterilisation of the unit, the equipment surface temperature increases considerably. The appropriate protections should be warn to prevent any risk of burns.

1. CHARACTERISTICS AND INSTALLATION

1.1 Operating principle

The dosing unit has been designed to produce adjustable doses of fluid inside a system.

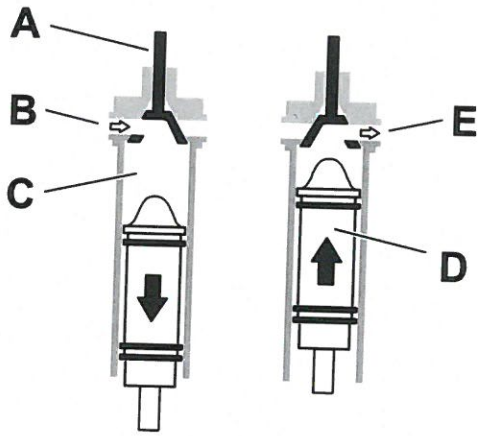

Dosing is made by the piston (**D**) which:

1. draws the product (**B**) into the chamber (**C**) when it moves downwards,
2. drives the product into the system (**E**) with the return movement upwards.

To do so, the rotation of the bored conical valve (**A**) is coordinated with the movements of the piston to allow the chamber to communicate:

- with the supply pipe (B) during the drawing-in phase (and closes access to the system (**E**) at the same time),
- with the system (**E**) during the pressure phase (and closes access to the supply pipe (**B**) at the same time).

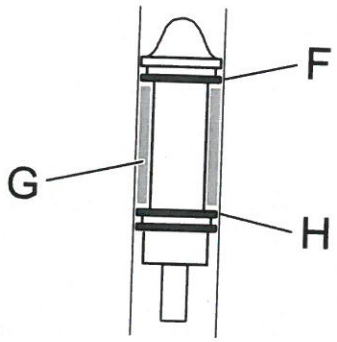

The piston is fitted with two seals (**F**) and (**H**). The space between these two seals is a "hydraulic barrier" (**G**) which allows:

- During CIP, cleaning at the rear of the seal (**F**) (on the product side) by the circulation of cleaning fluid under pressure.
- During production, by circulating drinking quality water at normal pressure the barrier isolates the product to be dosed from potentially polluted outside air.

During the cleaning phase, the valve (**A**) lifts off its seating to allow cleaning of the upper part of the valve and make the dosing unit "free-flow" (to ensure the maximum cleaning flow rate in the pipes situated upstream and downstream of the dosing unit).

Note: a detailed description of the various cycles (priming, production, cleaning etc) is available in the "Dosing unit cycles" section of the Maintenance chapter.

1.2 Characteristics

1.2.1 Construction characteristics

Technical data

- ∅ head passage: 023 mm
- ∅ piston: 072 mm
- Piston travel: 100 mm
- Actuator : Vérin à vis à bille ETB 100 + moteur Brushless
- Min dosing capacity: 41 cm3
- Max dosing capacity: 407 cm3
- Max exit pressure: 10 bars

1.2.2 Consumption characteristics

Consumption of compressed air for a system under 6 bars (87 psi):

- 0.7 Nm^3/h at 10 cycles/min
- 1.39 Nm^3/h at 20 cycles/min
- 2.09 Nm^3/h at 30 cycles/min
- Instant compressed air flow rate: 20 litres/min at a rate of 35 cycles/min

Electricity consumption:

- Power rating: 3.4 kW with volume 407 cm3, at a rate of 35 cycles/mn and outlet pressure 10 bars.

1.2.2.1 Dimensions

The dimensions of the equipment are shown on the attached plan.

1.2.3 Performances

1.2.3.1 Performance for 10 000 h

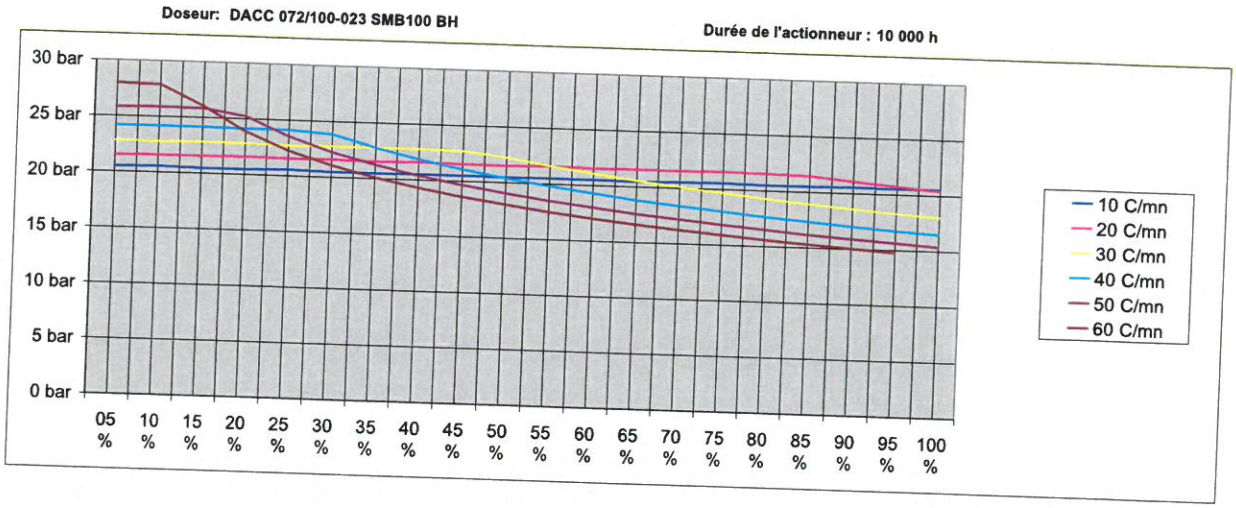

Motor power

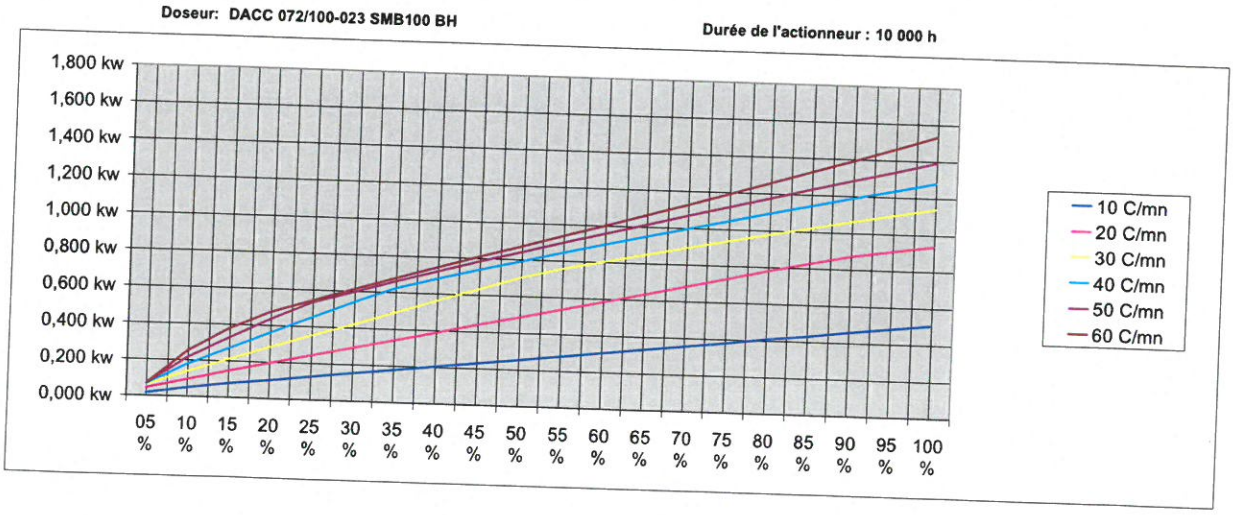

1.2.3.2 Performance for 20 000 h

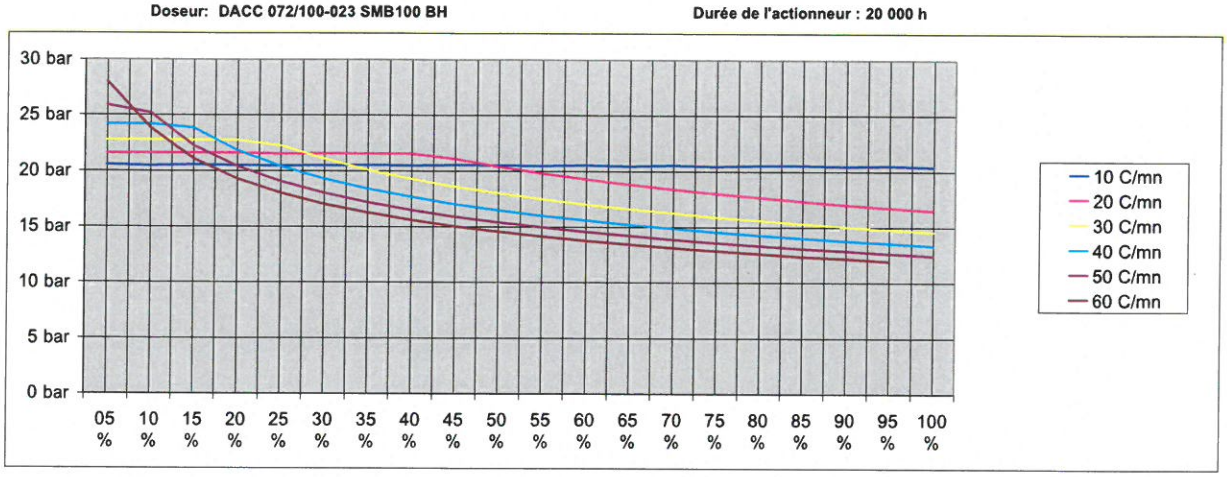

Motor power

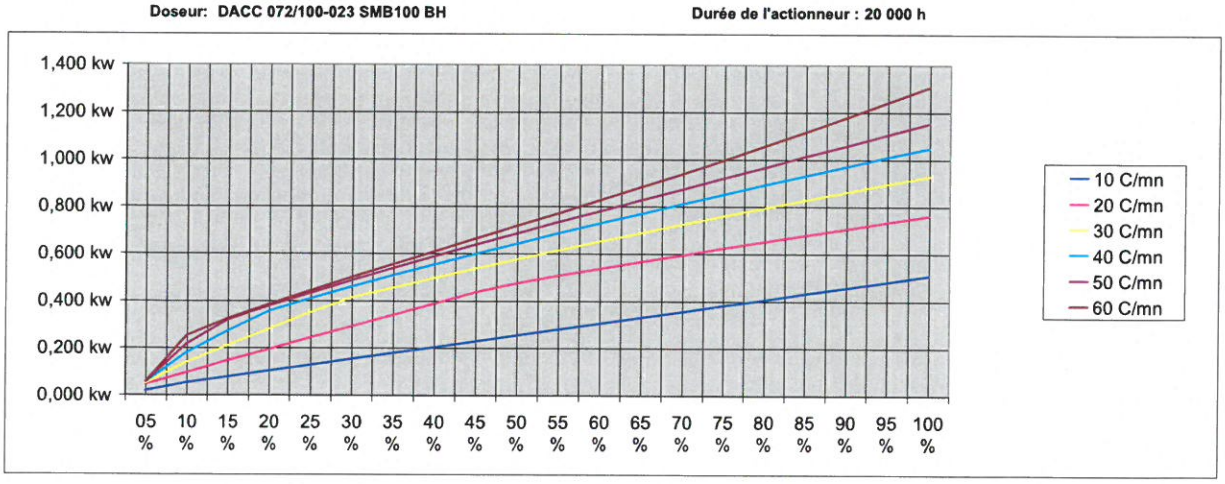

1.2.4 Characteristics of utilization

The dosing unit characteristics (flow rate, pressure, speed of rotation, construction etc) must not be modified without the prior written agreement of PCM Services.

General utilization characteristics:

- Compressed air supply: 6 - 8 bars (87 - 116 psi), dry non lubricated air
- Internal temperature of the product to be dosed: between 5°C and 85°C
- External temperature: between 5°C and 40°C

Cleaning in Place

The specific usage characteristics of the equipment during Cleaning in Place are as follows:

- Type of fluid: C.I.P. solutions (see recommendations in the "Cleaning" section)
- Pressure : 2 to 3 bars (29 psi - 43.5 psi)
- Temperature : 85°C max

Sterilisation

The specific usage characteristics of the equipment during sterilisation are as follows:

- Type of fluid: Filtered steam
- Flow-rate: zero : sterilisation is carried out in static mode
- Pressure: 2.5 bars max (36.3 psi)
- Temperature: 140°C for 5 minutes in static mode of 120°C for 20 minutes

Hydraulic barrier

The characteristics of the hydraulic barrier are given in the "DACC Hydraulic Barriers" instructions attached.

1.3 Installing the equipment

The equipment is verified in the factory before despatch.

As soon as the equipment is received, examine it immediately to ensure that it shows no obvious signs of damage. If it show obvious signs of damage, note clearly on the transport company's documents that the goods have been received damaged, with a brief description of the type of damage observed. Send a registered letter with confirmation of receipt within 48 hours to the transport company, with a copy to our customer department if you accept the damaged equipment.

1.3.1 Precautions to be taken during installation

It is important to leave enough space around the equipment to allow for servicing and adjustments.

Avoid installing the equipment in places where the ambient temperature is not within the temperature range for use of the machine (as defined in "Utilization Characteristics"). If the unit is installed outside the building, a protective device should be placed over it, and a frost protection device fitted.

The weight of the piping should not be borne by the equipment.

Mounting

The equipment must be placed on 2 support plates (**A**) 60mm wide, and fixed with the mounting flanges (**B**) supplied.

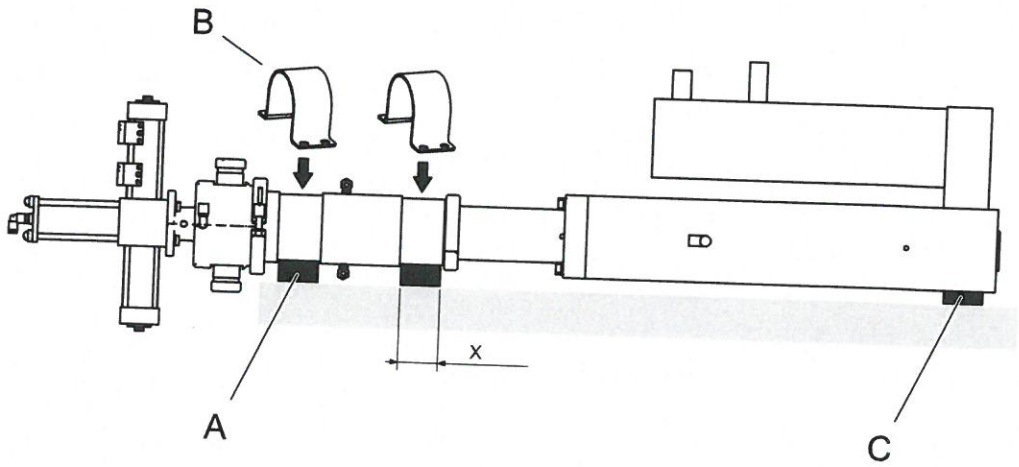

To ensure that the equipment is always correctly aligned, the rear must be placed (without being fixed) on a chock (**C**).

When the equipment is fitted horizontally, the direction of the pressure outlet (**D**) depends on the position of the supply device (**E**).

Horizontal installation of DACC

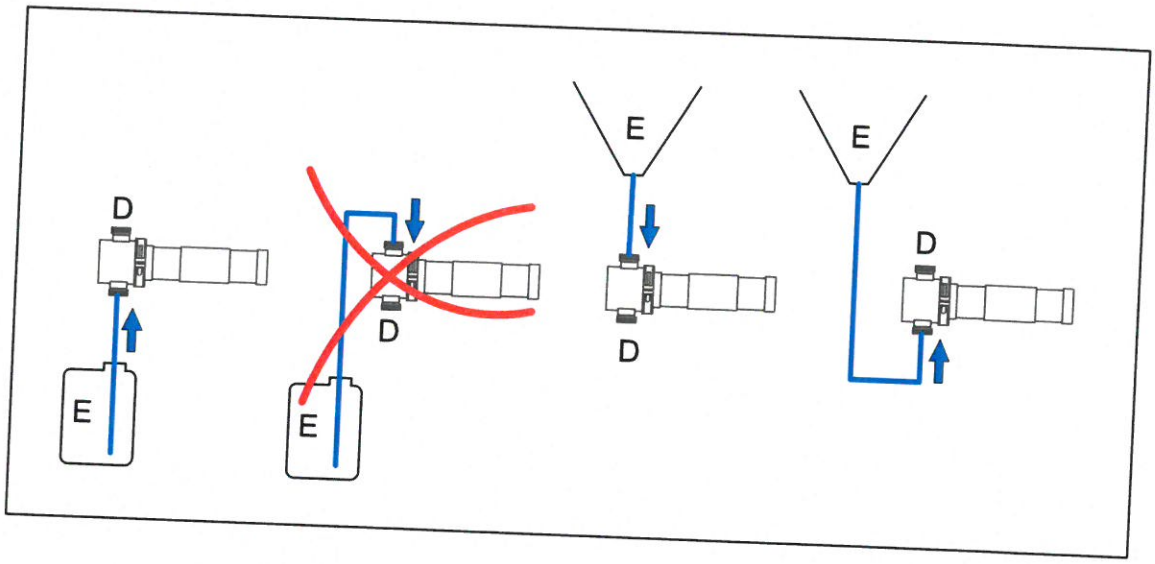

Vertical installation of DACC

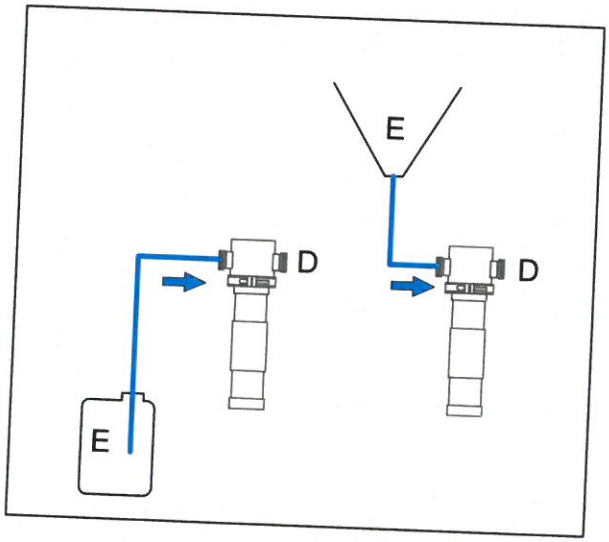

1.3.2 Connections

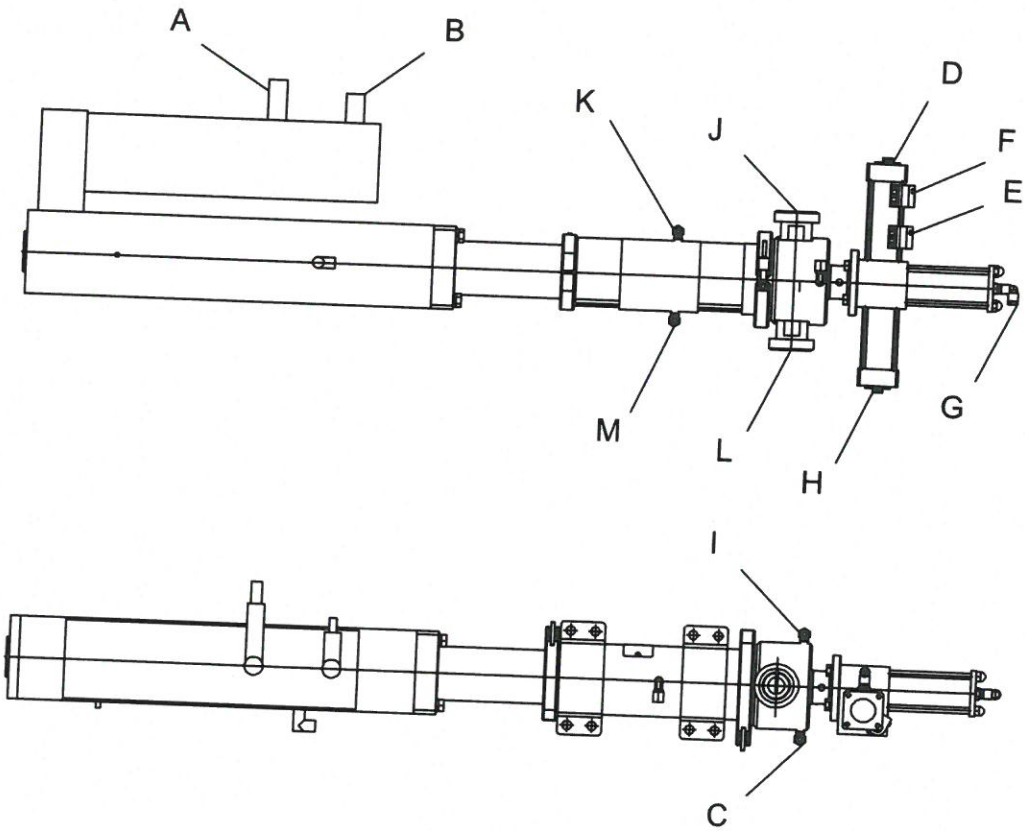

Key	Description
A	Actuator power supply
B	Actuator coder power supply
C	Hydraulic barrier outlet, head end
D	Compressed air to activate valve (pressure position)
E	**REF (pressure)** sensor (valve in pressure position)
F	**ASP (Suction)** sensor (valve in suction position)
G	Compressed air to lower valve
H	Compressed air to activate valve (suction position)
I	Hydraulic barrier inlet, head end
J	Pressure (or suction)
K	Hydraulic barrier outlet, body end
L	Suction (or pressure)
M	Hydraulic barrier inlet, body end

Hydraulic barrier

The arrangement for connecting the hydraulic barrier is described in the "DACC Hydraulic Barriers" instructions attached.

Specifications of automatic functions

If the integrator is going to undertake the management of the dosing unit, it is essential to check that the unit meets the following requirements:

- Before starting a new cycle, ensure that the previous cycle is completed.
- When the equipment (**A**) is used to inject into packaging equipment (**C**) via a mixer (**B**) or not, it is important to:
  - synchronise the beginning of dosing from (**A**) with the start of suction at (**C**),
  - adjust the period of pressure in (**A**) so that it is equal to the suction time in (**C**).

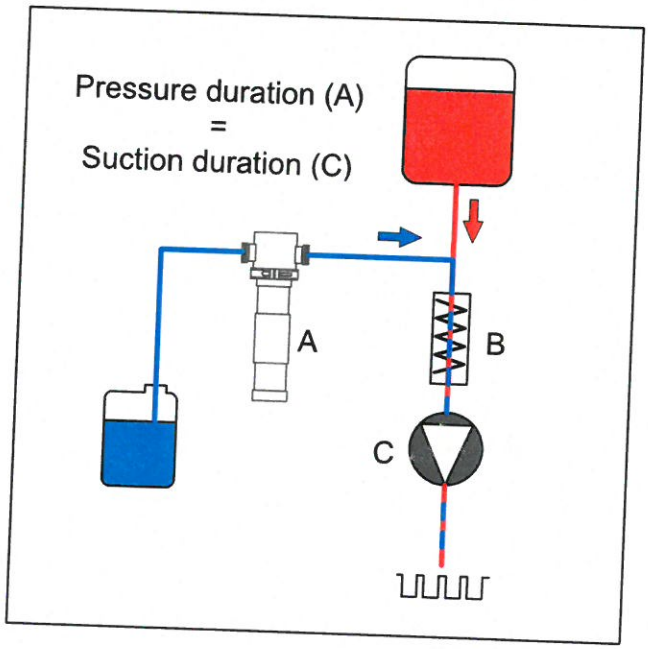

2. OPERATION

2.1 First start-up

Ensure that:

- The pipes in your system do not contain filings or foreign bodies which could damage the dosing unit.
- The actuator sensors are correctly adjusted (see chapter "reassembling the actuator").
- The temperature and the type of product to be dosed are within spec.
- The connections comply with the instructions given in the chapter "Connections".
- The circulation controller for the hydraulic barriers is correctly adjusted.*

To adjust the circulation controller refer to "hydraulic barrier" information, attached.

Never operate the equipment without water in the hydraulic barrier. This might cause rapid damage to the equipment's internal mechanism.

Conformity of speeds of movement of piston

If the integrator is going to undertake the management of the actuator, it is essential to check that the actuator movements meet the following requirements:

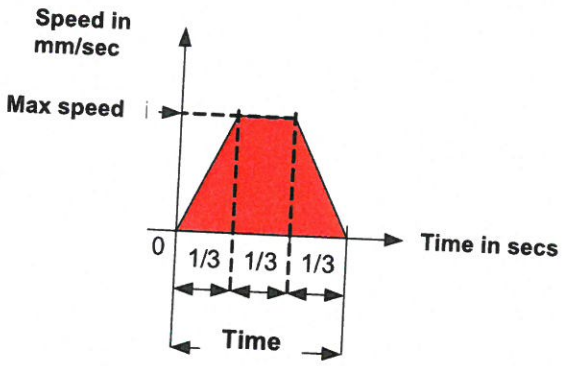

The formula which defines speed as a function of travel and time is as follows:

$$\text{Max speed}_{mm} = \frac{(1/2)\ \text{travel}_{mm}}{(1/3)\ \text{time}_{secs}} = \frac{3 \times \text{travel}_{mm}}{2 \times \text{time}_{secs}}$$

2.1.1 Before starting

Depending on the characteristics of the product to be dosed, it is sometimes necessary to modify the speed of suction and ejection of the equipment. This adjustment is done via the control consol to which the dosing unit is connected.

2.2 Normal operating procedure

2.2.1 Starting procedure

Check the following points each time before starting the unit:

- The product to be dosed is present.
- The valves on suction and pressure pipes are open.
- The product to be dosed is at the correct temperature.

2.2.2 General operating guidelines

During operating, it is necessary to ensure that:

- The equipment is constantly supplied with product and energy.
- Exit pressure remains stable and lower than the maximum capacity of the equipment.
- The temperature of the product being pumped is within the operating limits.
- Operating instructions in force for the process on the production site are respected.

2.2.3 Cleaning

General principles

Cleaning in Place is a combination of 4 features: speed of passage of the solutions (mechanical effect), temperature, chemical products and duration of cleaning. The optimum combination of these 4 effects will reduce the cost of the cleaning operation. E.g.: if the speed of passage of the solutions is increased, the duration of cleaning can be reduced.

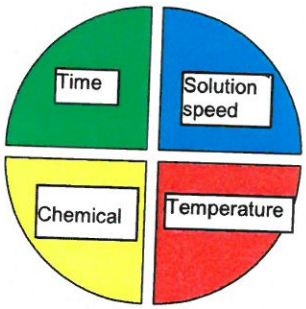

During Cleaning in Place, the equipment travel must be set to 100% and the valve must be lifted off its seating. It is advisable to avoid any risk of a "water hammer" effect, which could damage the equipment. The hydraulic barriers circuit should be cleaned at the same time.

Cleaning solutions should circulate with sufficient speed and turbulence to eliminate any debris present in the dosing unit. The CIP flow rate is created by a specific centrifugal pump. Recommended passage speeds are generally between 1.5 and 2.0 m/sec.

The equipment accepts temperatures up to 85°C.
After that temperature has been reached, it is advisable to allow the equipment to cool for 10 to 20 minutes before starting production.

The seating in PTFE and the seals must be compatible not only with the product being dosed but also with the detergents and disinfectants at the cleaning temperature. As these products are agressive, it is essential to respect the suppliers' recommendations regarding concentrations.

Configuring the equipment for cleaning

Before starting the Cleaning in Place procedure, it is necessary to:

- place the suction collectors in the CIP position,
- connect the hydraulic barrier to its cleaning point.

During the C.I.P. or STERILISATION phases, the temperature of the entire machine increases, and it is therefore essential to take every necessary precaution (gloves, overalls, boots etc) to avoid any risk of thermal or chemical burns from splashes of cleaning solution while working on the machine.

Note: the cleaning cycle is described in detail in the section "Dosing unit cycles".

3. MAINTENANCE

All work on the unit must be undertaken by trained and qualified staff in compliance with the instructions in this manual. PCM cannot be held liable if this rule is not respected.

Before working on the equipment, ensure that all precautions have been taken: dosing unit stopped, upstream and downstream valves closed, piping cleaned and purged, electricity supply disconnected and isolated. All necessary means must be employed to ensure staff safety, in compliance with current regulations.

3.1 Storage conditions

The equipment must be stored in its original packing, in a stable position, protected from shocks, in a dry place at a maximum temperature of 60°C.

If the unit has been stored for a long period (greater than 6 months) it is advisable to change all the seals and grease the equipment before using it.

After unpacking it, protect the equipment from shocks and dust.

If the equipment is stocked in SEI 4c type packing, change the drying sachets every 6 months.

3.2 Protection of the equipment when idle

When the equipment must remain idle on the system for a long period:

1. Undertake a Cleaning in Place followed by rincing
2. Set the dosing volume to the maximum
3. Fill the equipment with water
4. Protect it from external shocks

3.3 Preventive maintenance

The first general inspection of the dosing units must be undertaken after 3 months. This inspection comprises the complete dismantling of the dosing unit and the verification of the condition of wearable parts. If no significant wear is observed when the machine is dismantled for the first time, the periodicity of inspections can be increased by periods of 500 hours, without exceeding the limits shown in the table below.

The periodicities shown in the following tables are calculated for equipment which is used 24 hrs/day and 5 days/week.

3.3.1 Initial inspections

The following inspections must be carried out after starting the equipment:

	1 week (120 hrs)	1 month (500 hrs)	3 months (1500 hrs)
Leaks in pumped product	x		
Air leaks	x		
Surfaces of rotating flip valve rod gaskets			x
Conical valves and seating			x
Dosing piston gaskets			x

3.3.2 Replacements

The following preventive replacements are necessary:

	6 month (3000 hrs)	12 month (6000 hrs)	24 month (12000 hrs)
Dosing piston gaskets	x		
Anti-extrusion rings	x		
Conical valves and seating	x		
Conical valve rod gaskets	x		
Conical valve spring		x	
Rotary actuator gaskets			x
Buffer washer		x	

The periodicities depend on the product being dosed. The values given in the table above correspond to an abrasive product. It is recommended to adjust these values after 12 months experience.

3.3.3 Maintenance kits references

- Oring kit reference : JED1A-GC-D
- 6 months kit reference (3000 h) : JED1A-GC-D03
  12 months kit reference (6000 h) : JED1A-GC-D06
  24 months kit reference (12000h) : JED1A-GC-D12

3.3.4 Lubrication

It is only necessary to grease the piston actuator. To do so, unscrew the screw on the side and move the actuator until the greasing point (**A**) is visible through the borehole. Grease the point using the special tip (**B**) with the type of grease indicated:

- For white servo units (SMB without sensors) : **Klübersynth® UH1 64-62** (FDA grease).
- For any other type of servo unit : **Klüber® NBU15**.

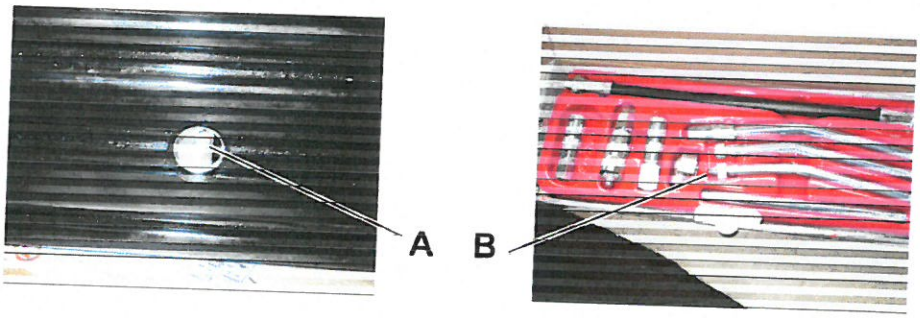

Refer to the manufacturer's manual herewith for further information.

3.3.5 External cleaning

Products used for external cleaning of the material must not contain solvants, and must be compatible with the equipment to be cleaned.

Specifically, take account of aluminium parts on the equipment.

Generally, external cleaning is done by spraying a foaming disinfectant, diluted to 3% in hot water, which is applied for 20 minutes and then rinced for 10 minutes.

3.4 Corrective maintenance

All work on the unit must be undertaken by trained and qualified staff in compliance with the instructions in this manual.

PCM cannot be held liable if this rule is not respected.

Before working on the equipment, ensure that all precautions have been taken: dosing unit stopped, upstream and downstream valves closed, piping cleaned and purged, electricity supply disconnected and isolated. All necessary means must be employed to ensure staff safety, in compliance with current regulations.

3.4.1 Trouble-shooting

The tables below show, for each possible situation when the dosing unit is jammed, the possible causes and their solutions.

Note: the dosing unit is in the normal stand-by position when the valve is turned towards suction and the piston is lowered (maximum volume).

Jamming during rotation of the valve towards the pressure outlet (piston lowered)

Possible cause	Solution
The rotary actuator is jammed mid-way	Check for air in the tube **D** (see "Connections" section)
The valve is jammed mechanically	Check for foreign bodies in the head
The pressure sensor is U/S or needs adjustment. The electrical connection is defective	Move the sensor until the LED lights up (**E**)
The end-of-travel buffer is wrongly set	Unscrew the buffer
The **REF** pressure distributor is U/S	Force the **REF** distributor (see "Connections" section)
The rotary actuator is defective	Check that the PMB electricity supply is connected to the variator. Check the air supply pressure, or leaks in the pneumatic chamber of the rotary actuator.

Jamming during upward movement of the piston (valve facing pressure outlet)

Possible cause	Solution
The linear actuator is jammed mid-way	Check that none of the valves are closed downstream of the dosing unit, which can cause a tracking error (default stop).
The piston is jammed mechanically mid-way	Check for foreign bodies in the sleeve
The piston is jammed mechanically mid-way	Check the condition and the movement of the linear actuator.
The linear actuator does not start	Check that the pressure sensor **E** is present
The linear actuator does not start	Check the state of the status LEDs on the variator (See http://www.parker.com/ead/cm2.asp?cmid=8318
The variator is defective	The upper LED is red. Check the default code. (See http://www.parker.com/ead/cm2.asp?cmid=8318)

Jamming during rotation of the valve towards the suction inlet (piston partly raised)

Possible cause	Solution
The rotary actuator is jammed mid-way	Check for air in the tube **H** (see "Connections" section)
The valve is jammed mechanically	Check for foreign bodies in the head
The pressure sensor is U/S or needs adjustment. The electrical connection is defective	Move the sensor until the LED lights up (**F**)
The end-of-travel buffer is wrongly set	Unscrew the buffer
The **ASP** pressure distributor is U/S	Force the **ASP** distributor (see "Connections" section)
The rotary actuator is defective	Check that the electricity supply **F** is connected to the variator. Check the air supply pressure, or leaks in the pneumatic chamber of the rotary actuator.

Jamming during lowering of the piston (valve facing suction)

Possible cause	Solution
The linear actuator is jammed mid-way	Check that none of the valves are closed upstream of the dosing unit, which can cause a tracking error (default stop).
The piston is jammed mechanically mid-way	Check for foreign bodies in the sleeve
The piston is jammed mechanically mid-way	Check the condition and the movement of the linear actuator.
The linear actuator does not start	Check the presence of the rotary actuator pressure sensor **F**.
The linear actuator does not start	Check the state of the status LEDs on the variator (See http://www.parker.com/ead/cm2.asp?cmid=8318
The variator is defective	The upper LED is red. Check the default code. (See http://www.parker.com/ead/cm2.asp?cmid=8318)

3.4.2 Dosing unit cycles

CIP phase

SEQUENTIAL SEQUENCE CHART FOR DOSING UNIT

Note: The dosing unit is set to maximum volume and is idle (phase 0), the valve is turned towards suction, the piston is in the suction position and the valve is firmly on its seating.

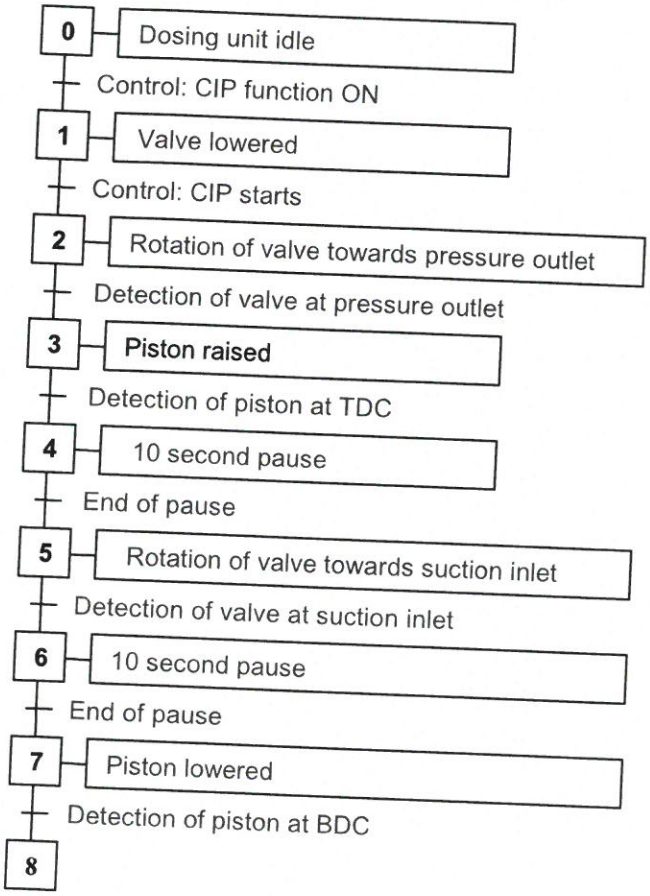

Different actions at step 8:

If CIP function "ON" and Start CIP "ON", go back to step 2.

If CIP function "ON" but no additional CIP start, go back to step 1.

If the CIP function stops, go back to step 0 with valve raised.

Sterilisation/cleaning phase

SEQUENTIAL SEQUENCE CHART FOR DOSING UNIT

Note: The dosing unit is set to maximum volume and is idle (phase 0), the valve is turned towards suction, the piston is in the suction position and the valve is firmly on its seating.

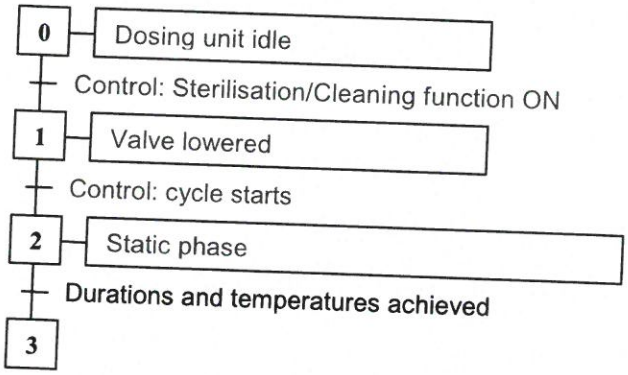

Different actions at step 3:

If function Sterilisation/Cleaning stays ON, go back to step 1.

If the Sterilisation/Cleaning function stops, go back to step 0 with valve raised.

Rincing phase

The sequential function chart in rincing phase is the same as for CIP.

Priming phase

SEQUENTIAL SEQUENCE CHART FOR DOSING UNIT

Note: when the dosing unit is idle (phase 0), the valve is turned towards suction and the piston is in the Suction position.

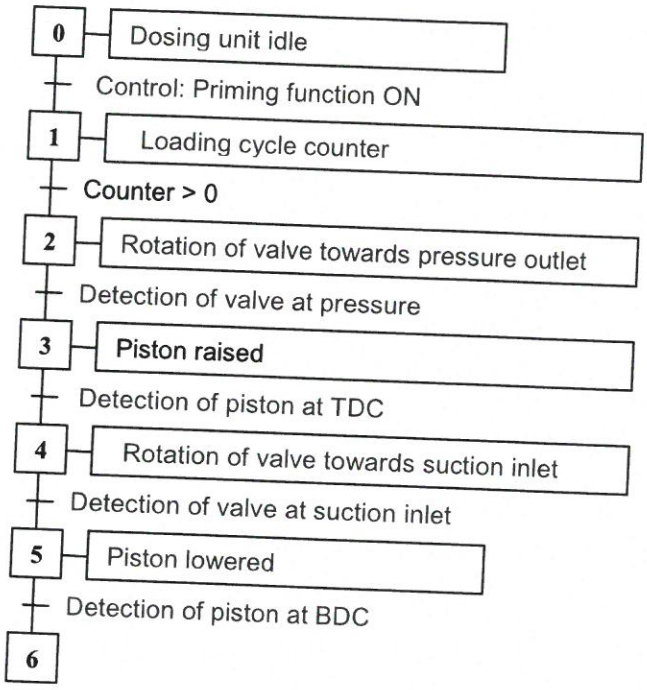

Different actions at step 6:

If Priming function "ON" and the counter reads > 0, go back to step 2.

If counter = 0 or Priming function stops, go back to step 0.

Production phase (injection)

SEQUENTIAL SEQUENCE CHART FOR DOSING UNIT

Note: when the dosing unit is idle (phase 0), the valve is turned towards suction and the piston is in the Suction position.

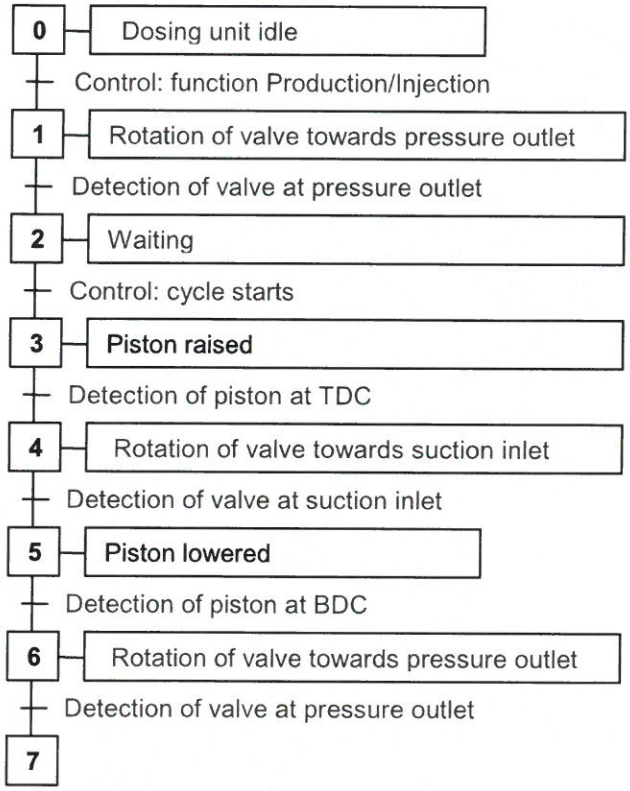

Different actions at step 7:

If function Production/Injection is ON, go back to step 1.

If the Production/Injection function stops, go back to step 0.

4. APPENDIX

Disassembly

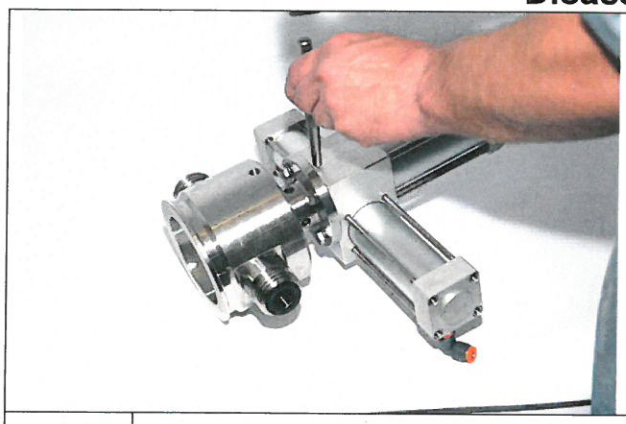

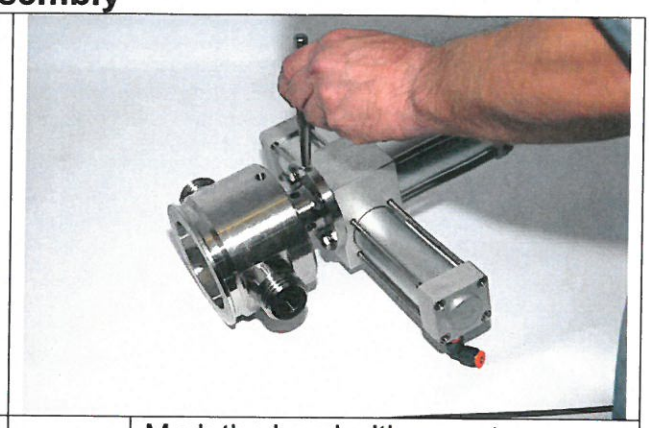

1	Mark the rotary actuator with a centre punch	2	Mark the head with a centre punch, opposite the mark made on the rotary actuator

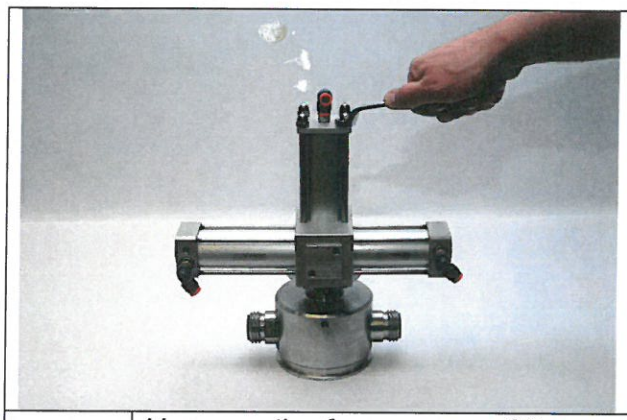

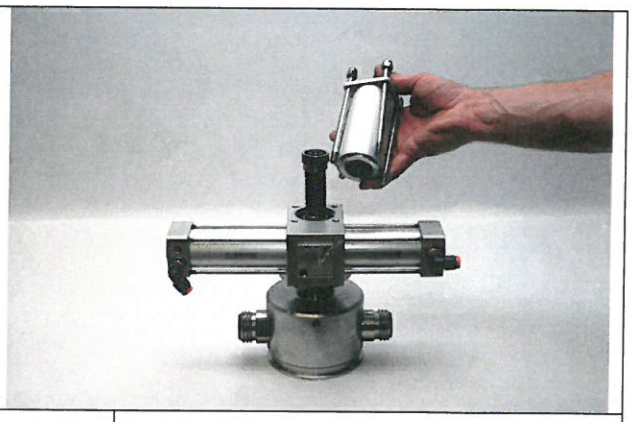

3	Unscrew the four screws of the valve lowering unit	4	Remove the valve lowering until

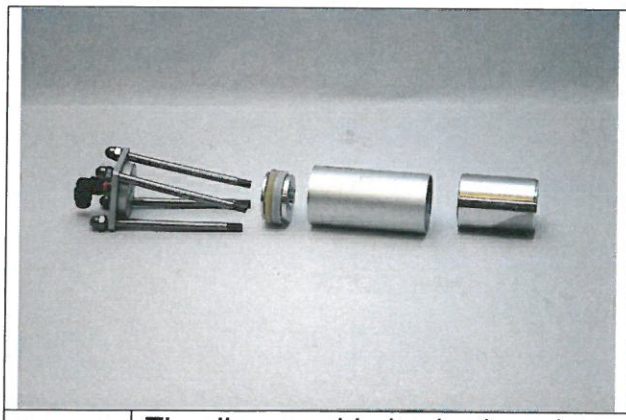

5	The disassembled valve lowering unit	6	

PCM – 17 Rue Ernest Laval – BP 35 – 92173 VANVES CEDEX –
tel : 33 1 41 08 15 15 Fax : 33 1 41 08 15 00
APE 291 B – Capital : 10 154 970 euro – TVA FR 88 572 180 198

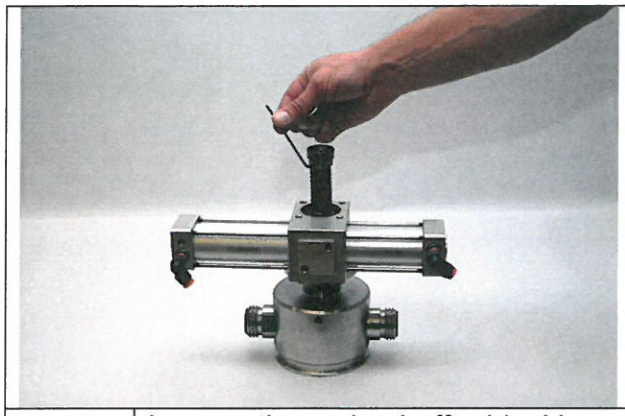

7	Loosen the spring buffer blocking screws

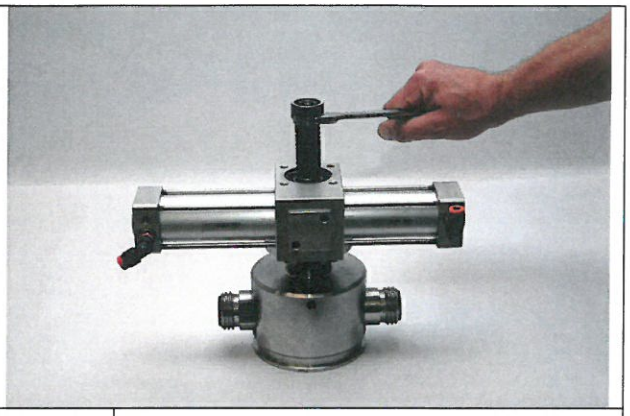

8	Unscrew the spring buffer

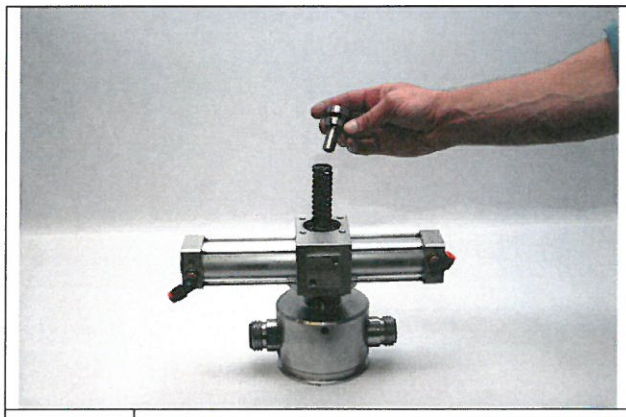

9	Remove the spring buffer

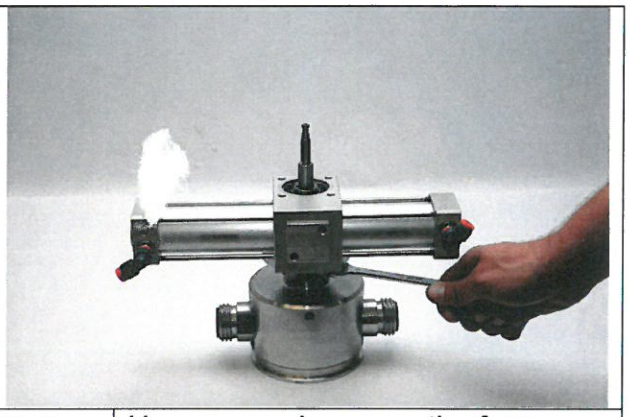

10	Unscrew and remove the four screws on the rotary actuator

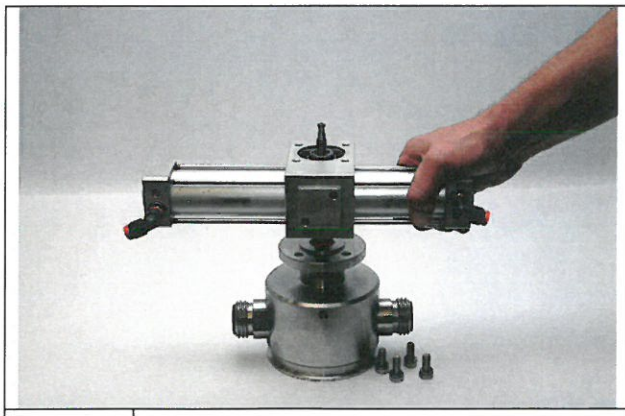

11	Remove the rotary actuator

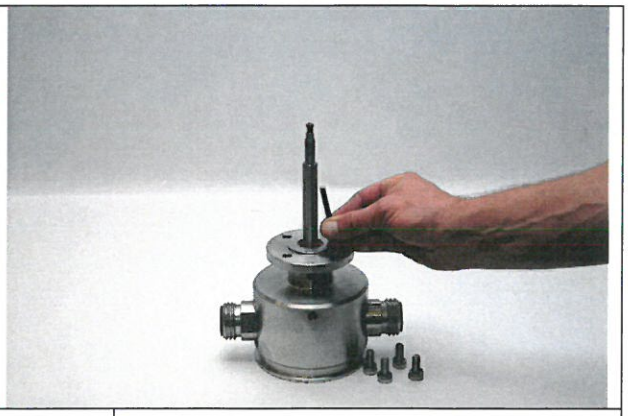

12	Remove the cotter pin

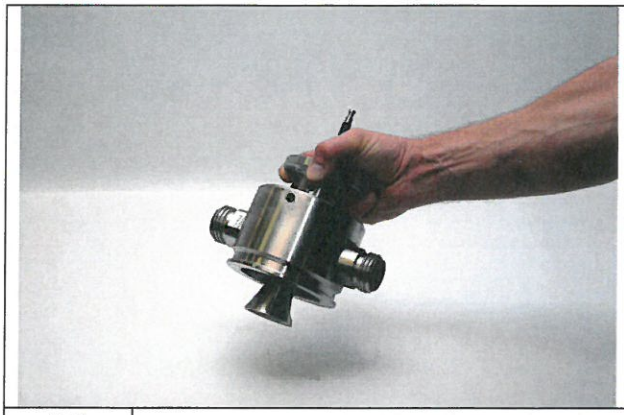

13	Free the valve

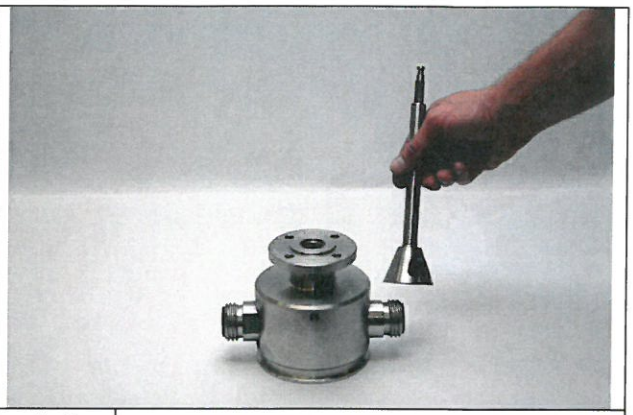

14	Withdraw the valve from the head

15	Using a mallet, loosen the two head couplings

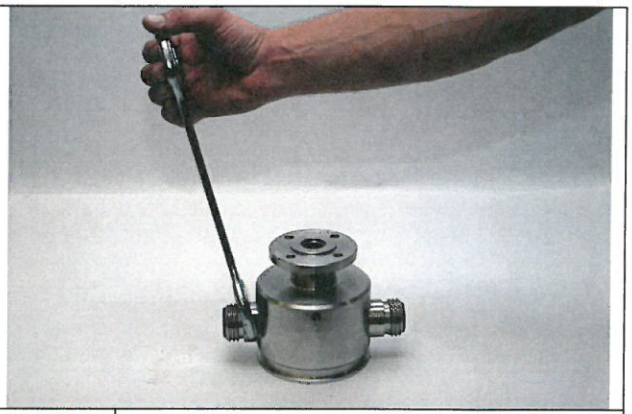

16	Unscrew the two head couplings completely

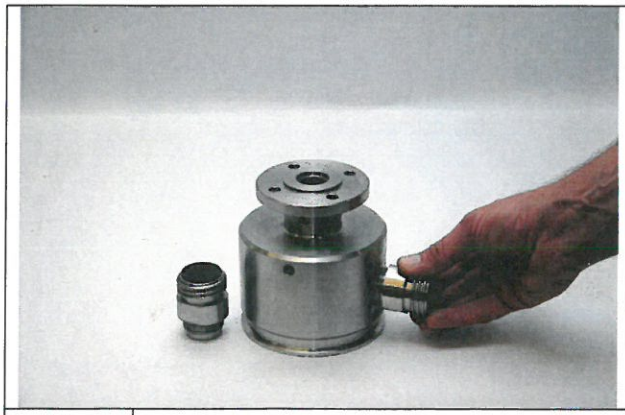

17	Withdraw the two head couplings

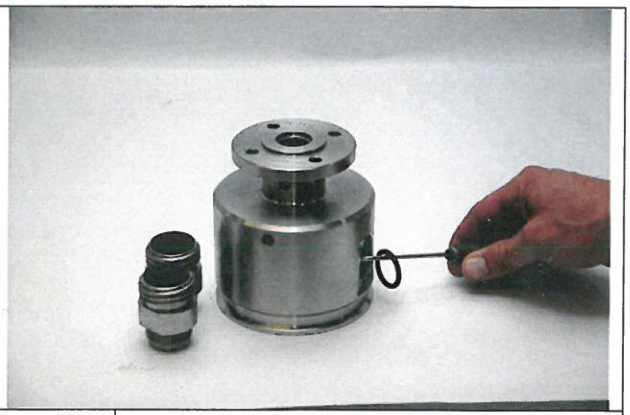

18	Remove the O-rings

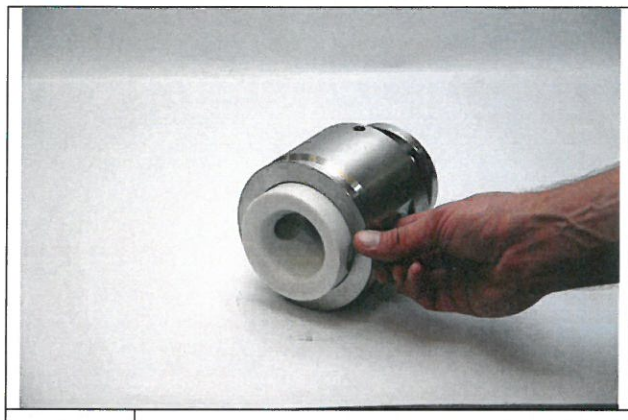

19	Loosen the head seating

20	Withdraw the seating from the head

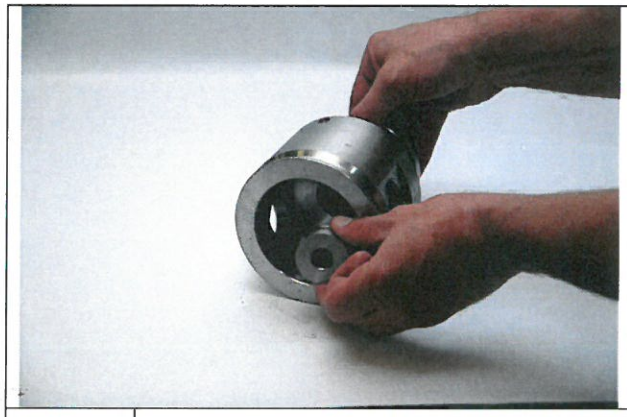

21	Remove the seal-holder ring

22	Withdraw the seal from the base of the head

23	Using a screwdriver, remove the lip seal

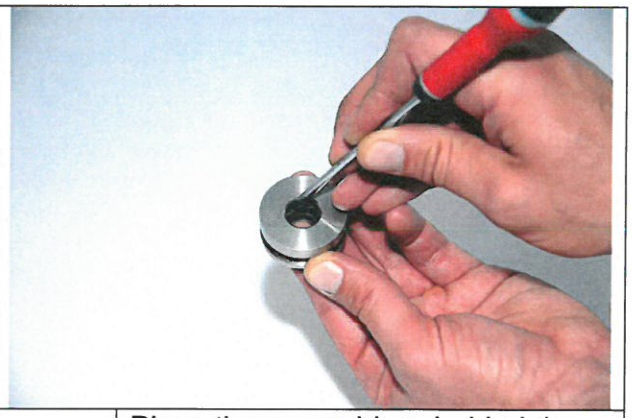

24	Place the screwdriver behind the lobe gasket

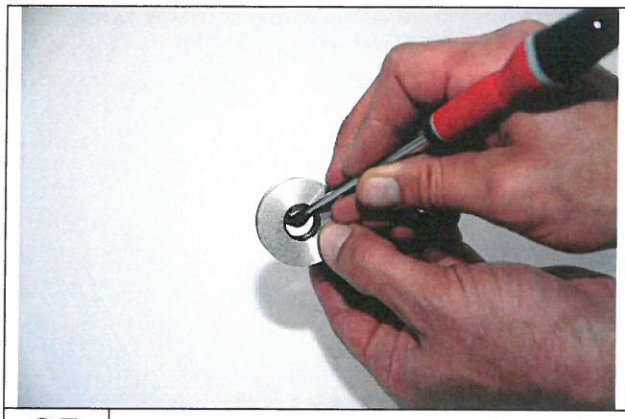		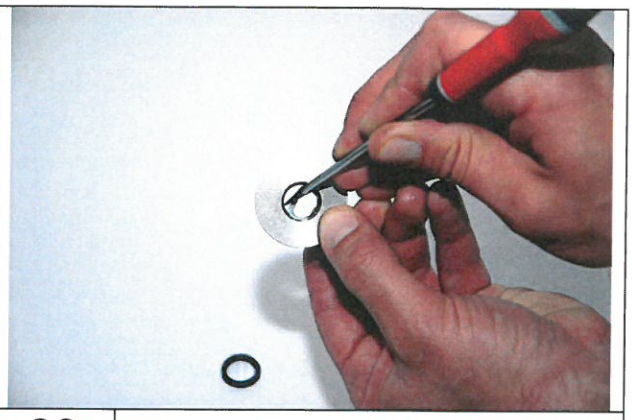	
25	Remove the lobe gasket	**26**	Withdraw the anti-extrusion ring

Assembly

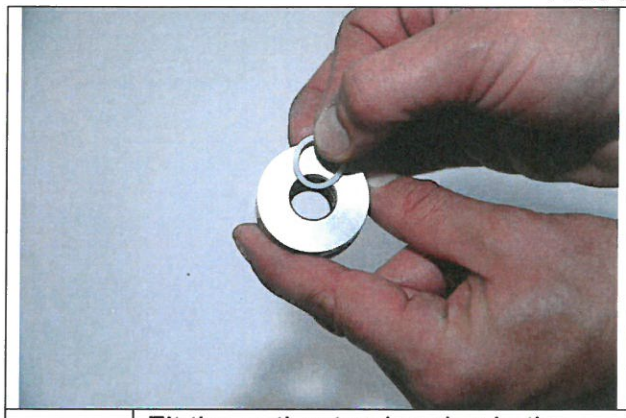

1	Fit the anti-extrusion ring in the seal-holder ring

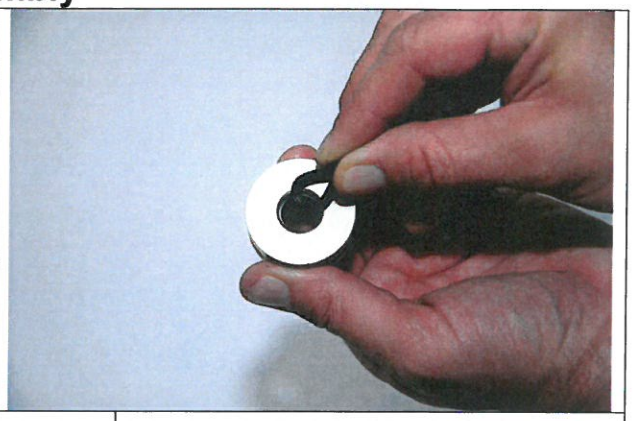

2	Present the lobe gasket

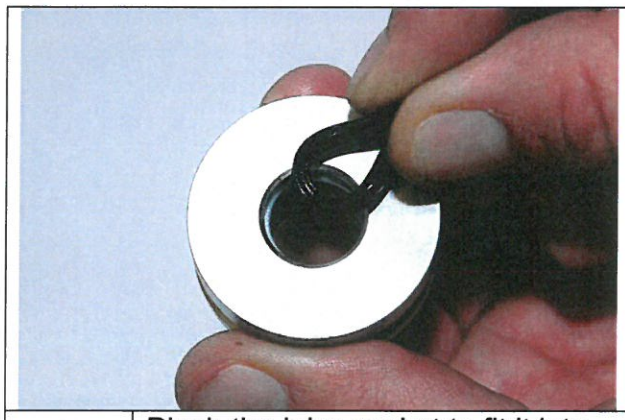

3	Pinch the lobe gasket to fit it into the seal-holder ring

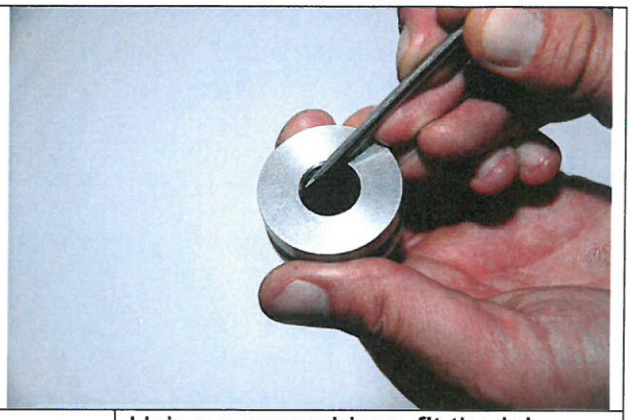

4	Using a screwdriver, fit the lobe gasket

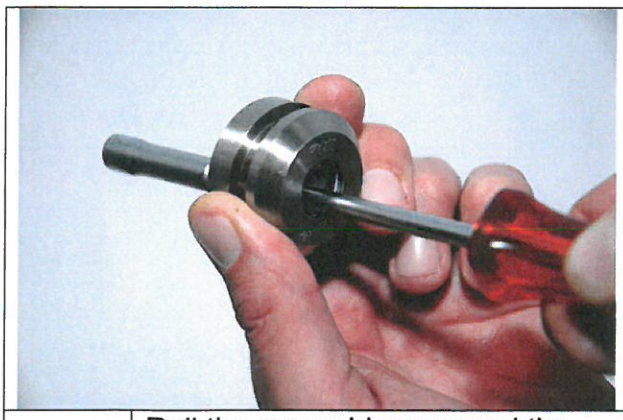

5	Roll the screwdriver around the sides of the seal-holder ring to ensure that the lobe gasket is correctly seated.

6	Present the lip seal to the head

7	Using a screwdriver, fit the lip seal

8	Grease the bottom of the head

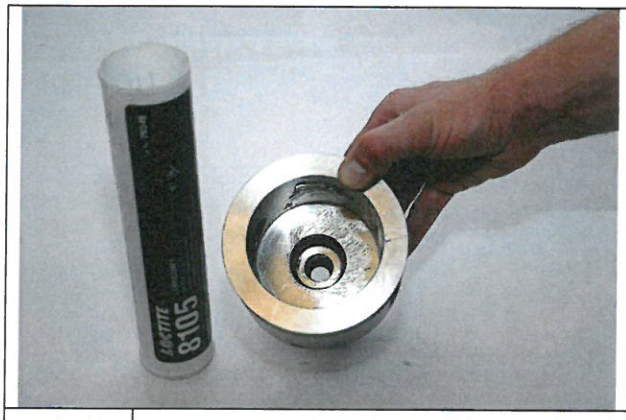

9	Insert the seal

10	Grease the seals on the seal-holder ring

11	Present the seal-holder ring

12	Fit the seal-holder ring in the bottom of the head

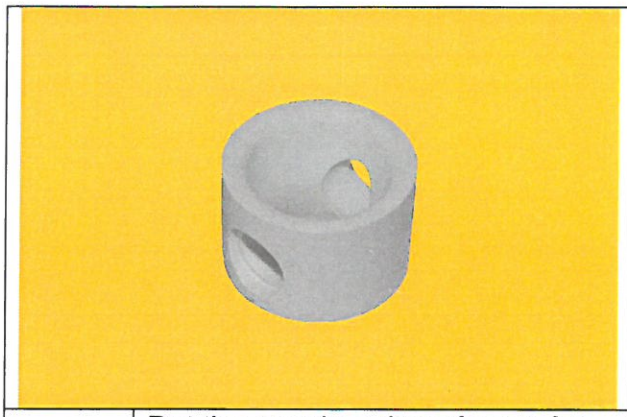

13	Put the seat in a deep-freeze for one hour before installing it

14	Grease the O-ring and place it on the seat

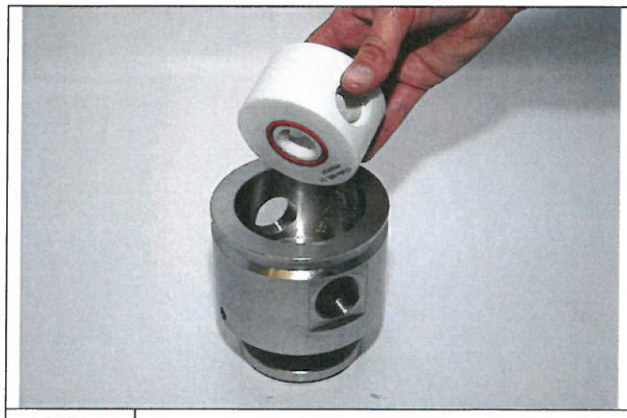

15	Present the seat

16	Place the seat in the head

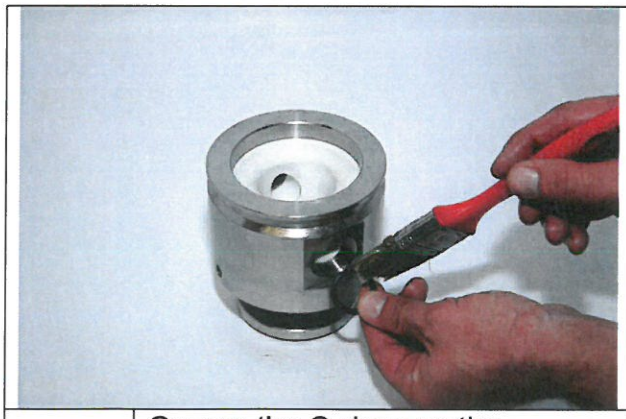

17	Grease the O-rings on the couplings

18	Install them

19	Center the seat in the head

20	Place the head on the sleeve

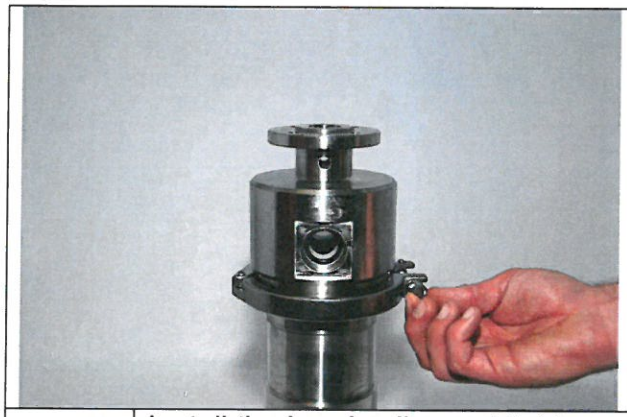

21	Install the head collar and tighten it to position the seat correctly.

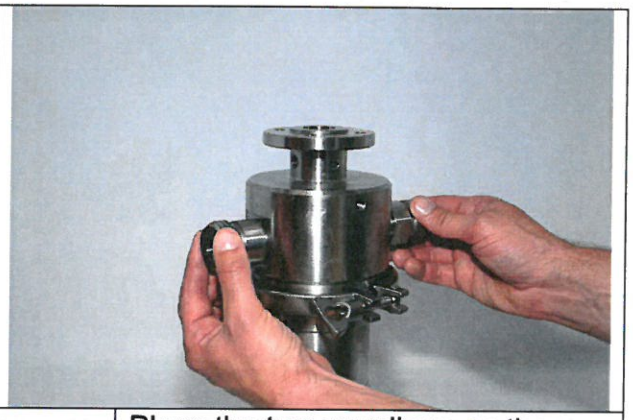

22	Place the two couplings on the head

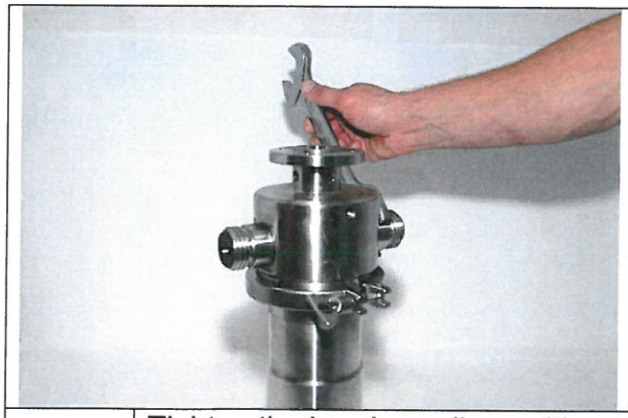

23	Tighten the head couplings with a spanner

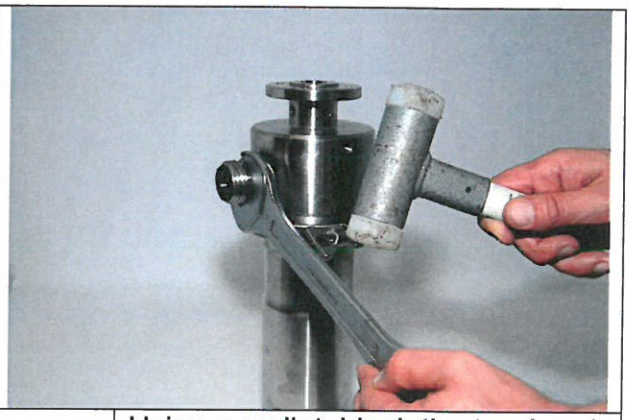

24	Using a mallet, block the two head couplings

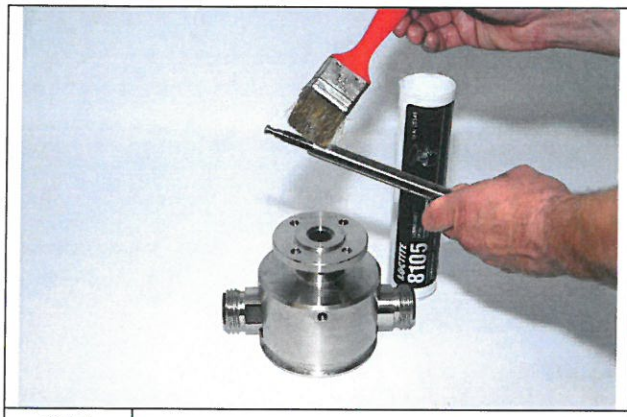

25	Grease the end of the valve

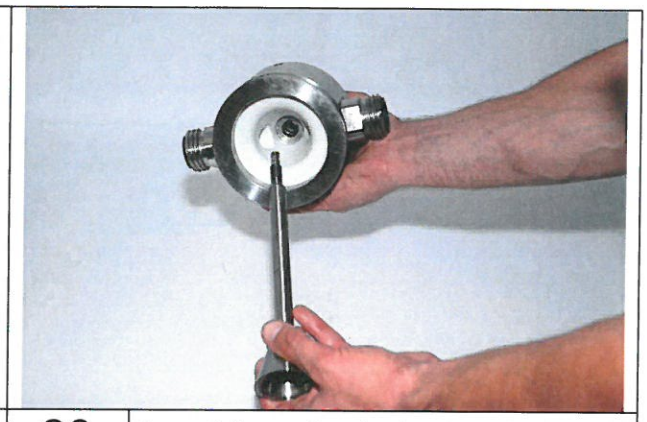

26	Insert the valve in the head

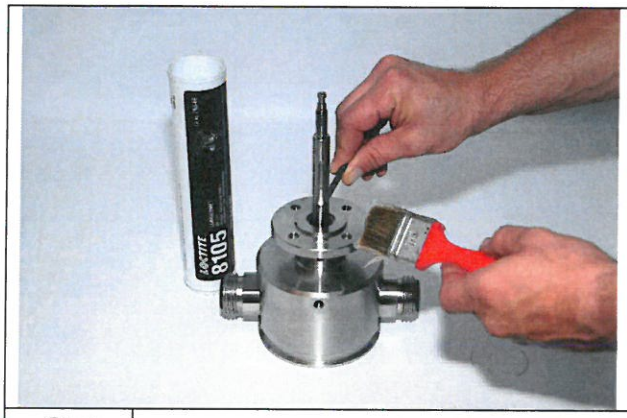

27	Grease the cotter pin

28	Fit the cotter pin on the valve

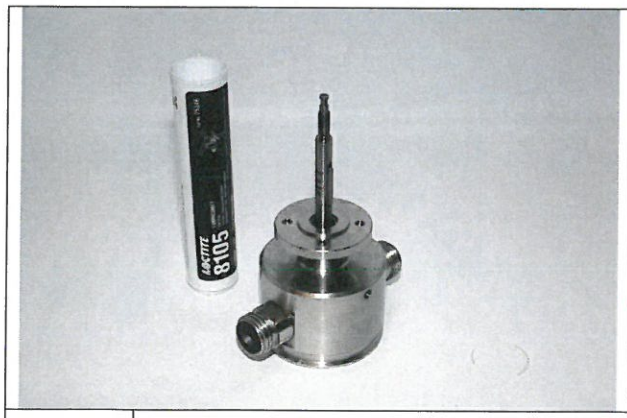

29	Valve in place in the head

30	Grease the valve

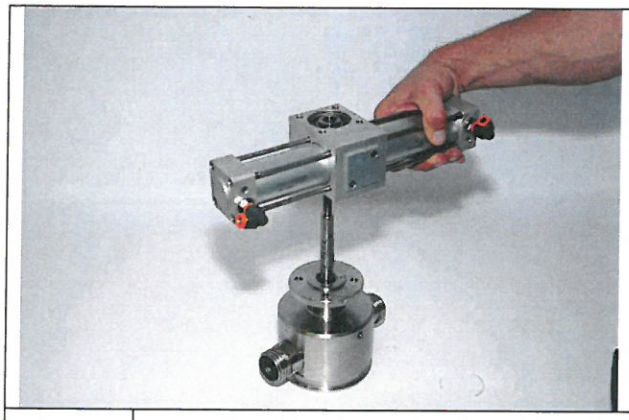

31	Present the rotary actuator

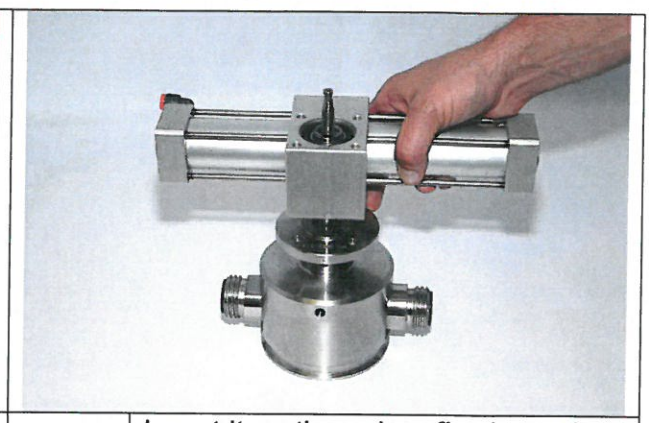

32	Insert it on the valve, firmly on the head

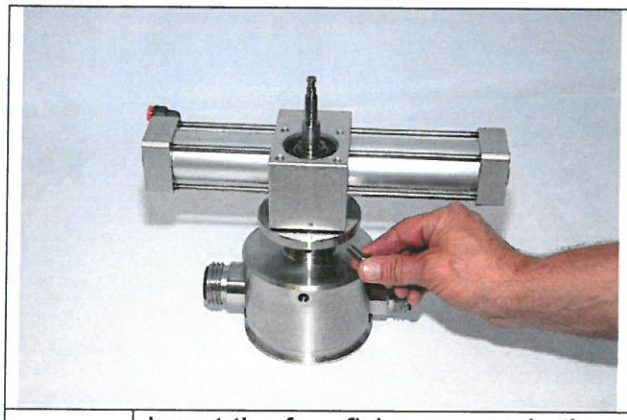

33	Insert the four fixing screws in the rotary actuator

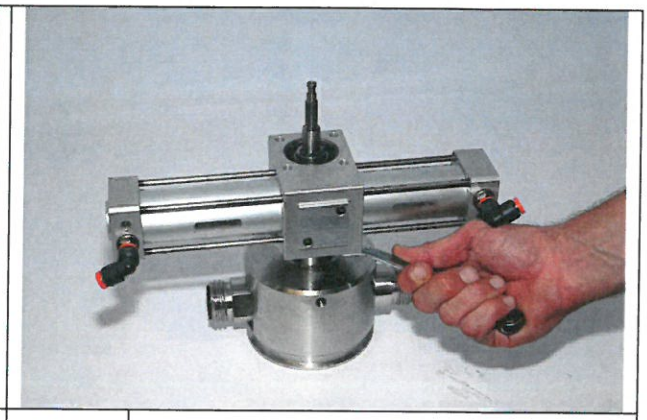

34	Tighten the screws

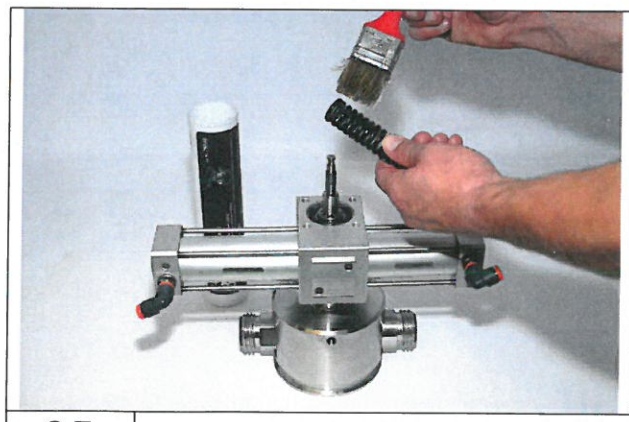

35	Grease the spring

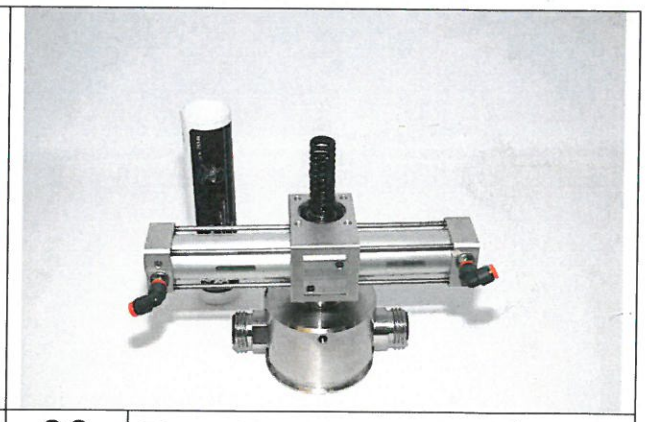

36	Place the spring on the valve

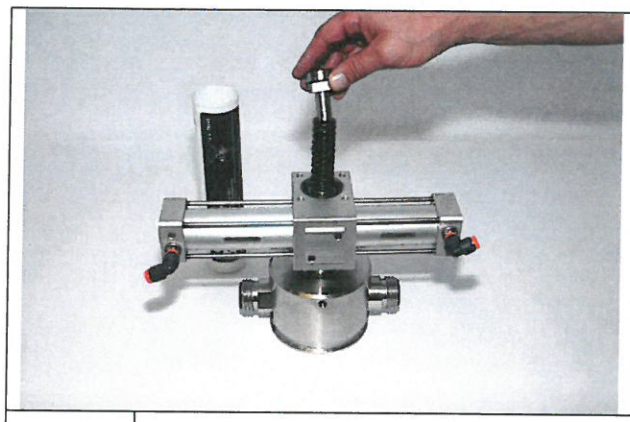

37	Fit the spring buffer

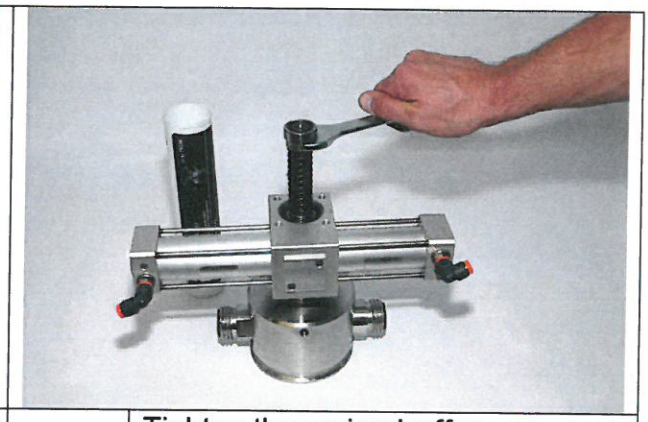

38	Tighten the spring buffer completely

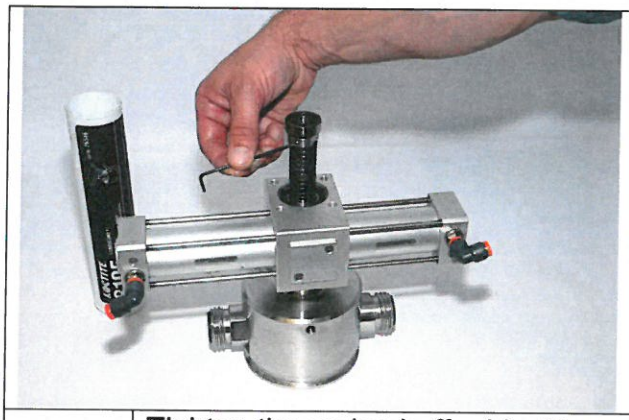

39	Tighten the spring buffer blocking screws

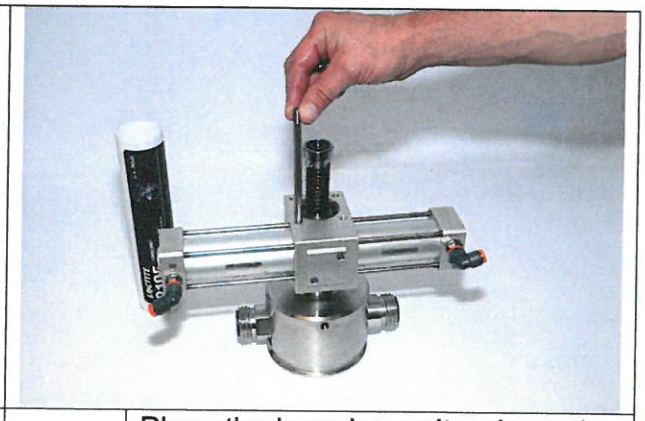

40	Place the lowering unit rods on the rotary actuator

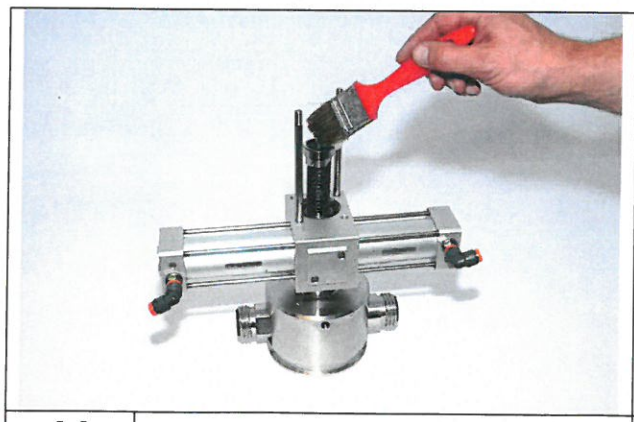

41	Grease the bearing

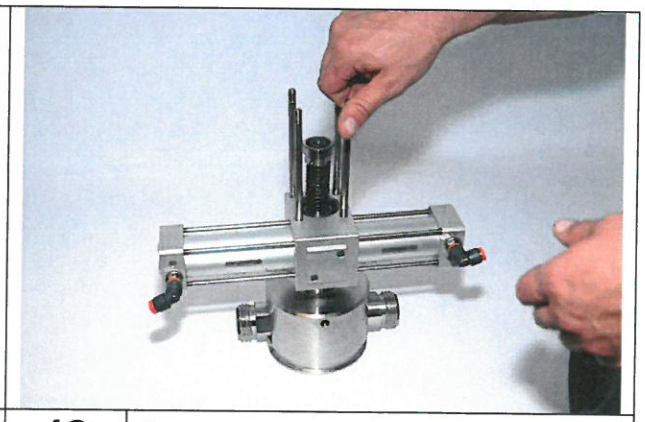

42	Screw in the rods

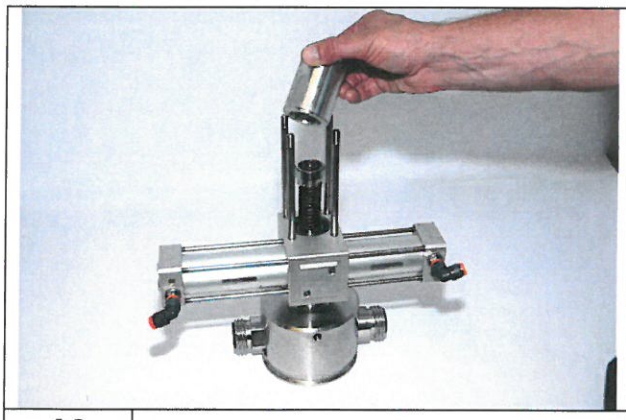

43	Present the lowering unit buffer

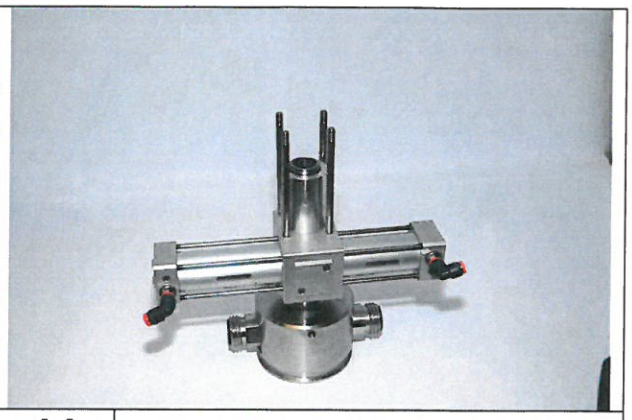

44	Fit the lowering unit buffer

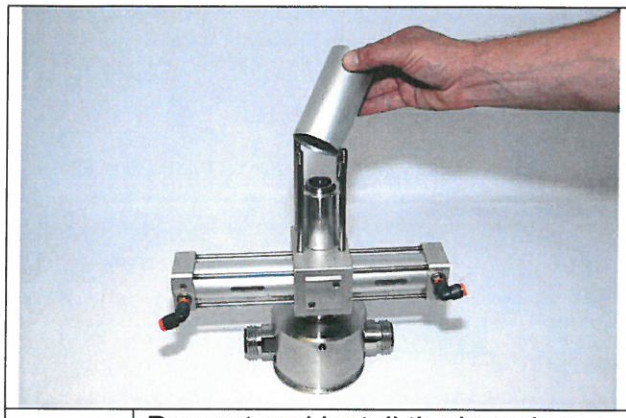

45	Present and install the lowering unit sleeve

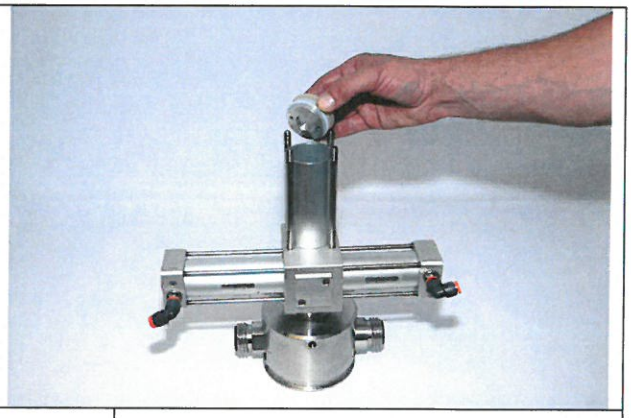

46	Present the lowering unit piston

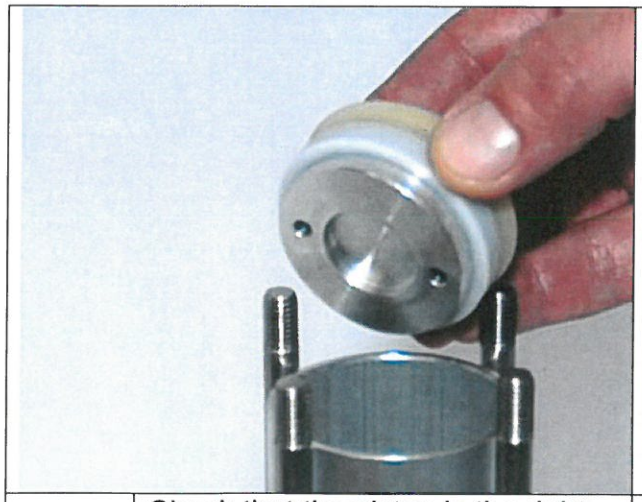

47	Check that the piston is the right way round

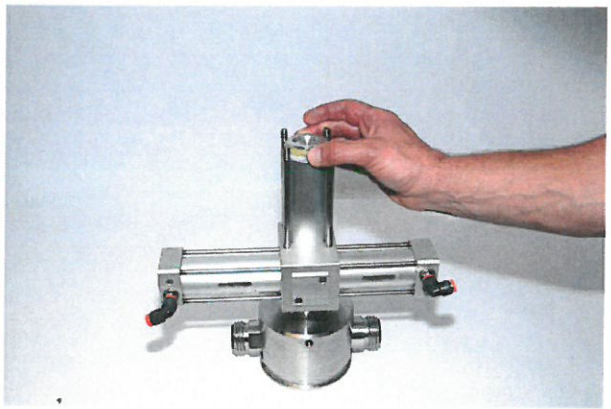

48	Fit the piston in the lowering unit sleeve

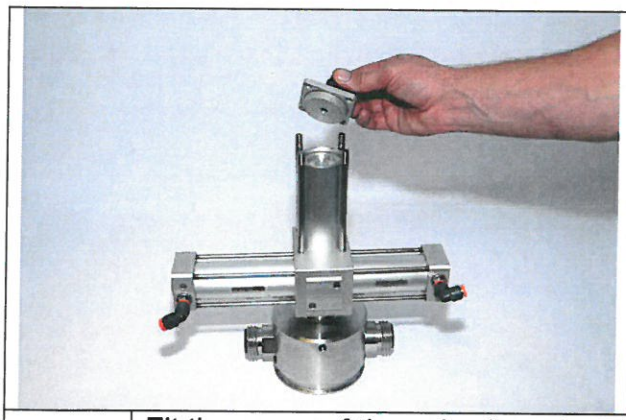

49	Fit the cover of the valve lowering unit

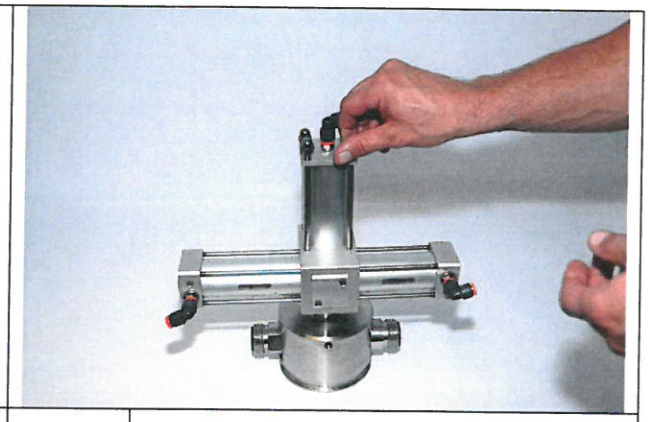

50	Place the four nuts on the rods

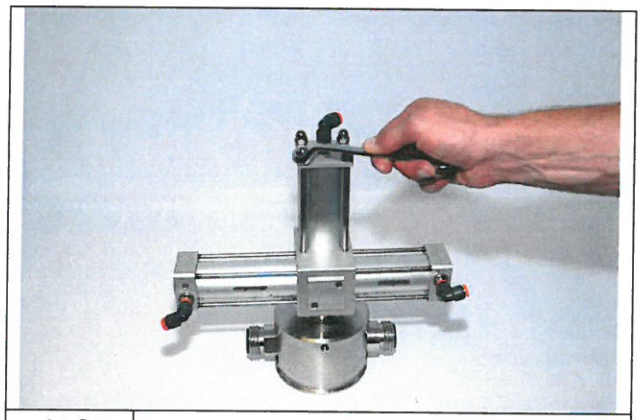

51	Tighten the nuts

Disassembly

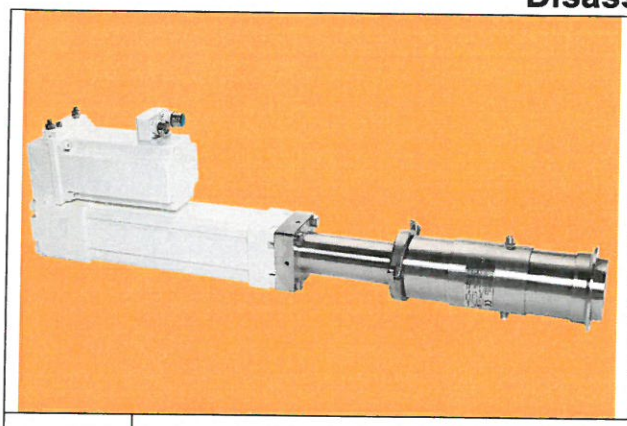

1	

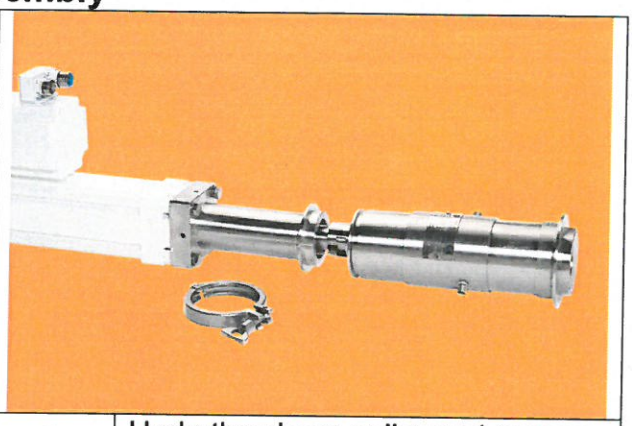

2	Undo the clamp collar and remove the piston / sleeve unit

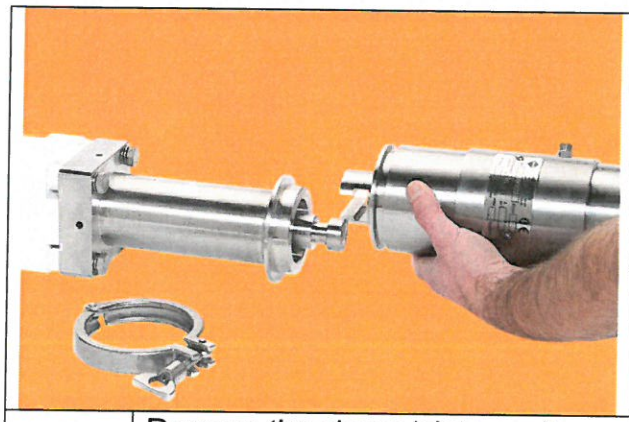

3	Remove the sleeve/piston unit from the tenon

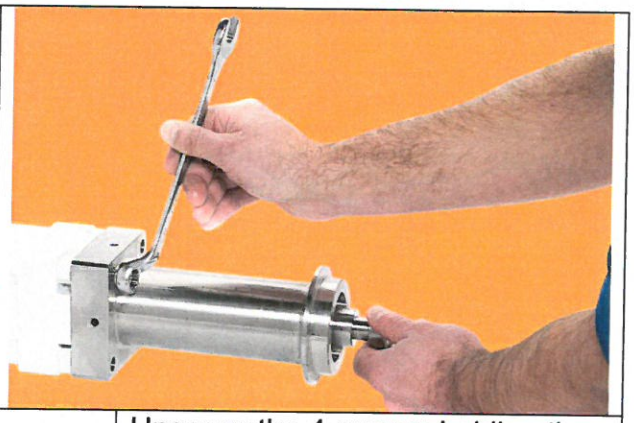

4	Unscrew the 4 screws holding the distance piece

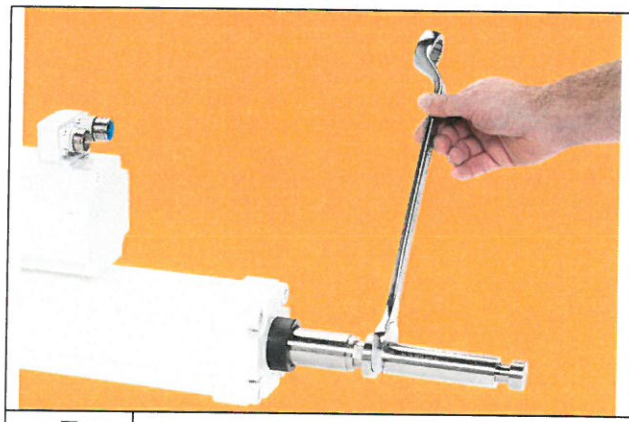

5	Unscrew the tenon

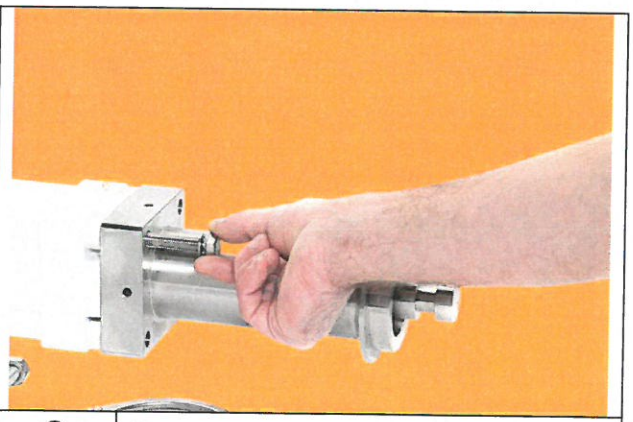

6	Remove the screws

PCM – 17 Rue Ernest Laval – BP 35 – 92173 VANVES CEDEX –
tel : 33 1 41 08 15 15 Fax : 33 1 41 08 15 00
APE 291 B – Capital : 10 154 970 euro – TVA FR 88 572 180 198

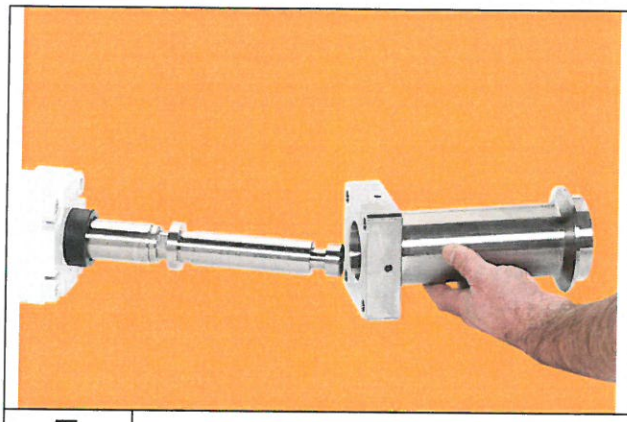		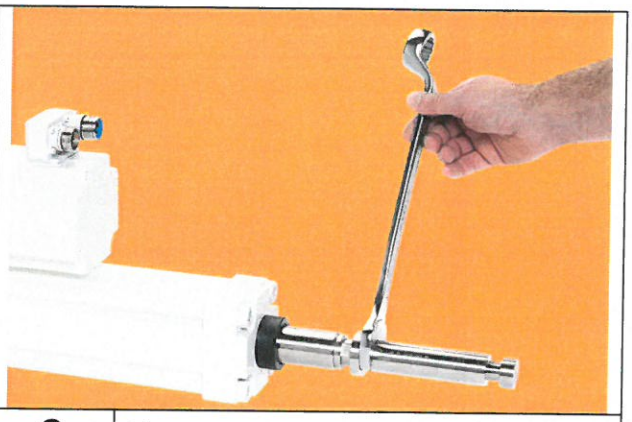	
7	Remove the distance piece	**8**	Unscrew the tenon

PCM – 17 Rue Ernest Laval – BP 35 – 92173 VANVES CEDEX –
tel : 33 1 41 08 15 15 Fax : 33 1 41 08 15 00
APE 291 B – Capital : 10 154 970 euro – TVA FR 88 572 180 198

Assembly

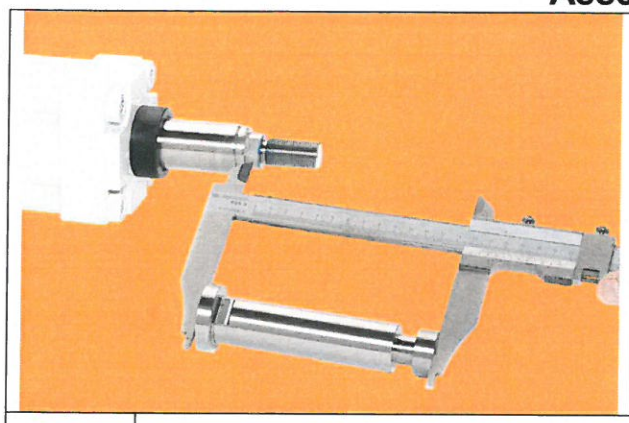

1	Check the length of the tenon

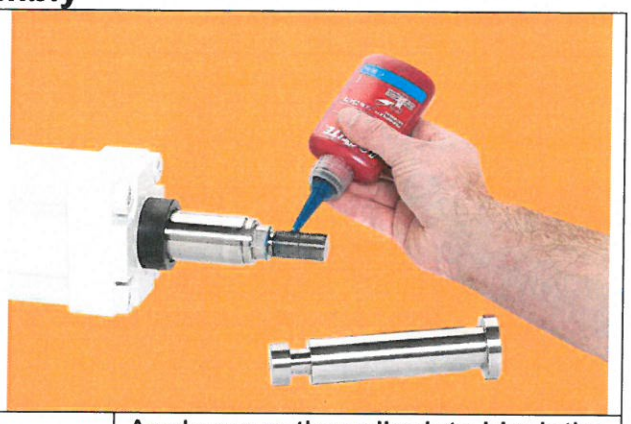

2	Apply some threadlock to block the tenon

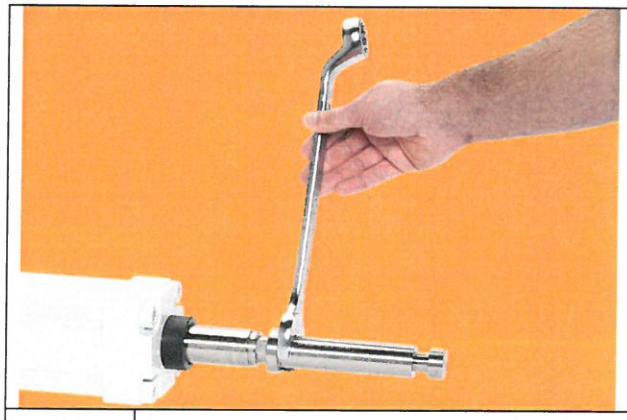

3	Screw in the tenon

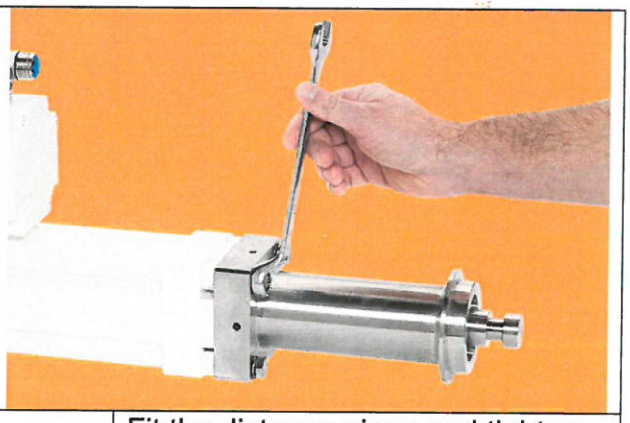

4	Fit the distance piece and tighten the 4 screws

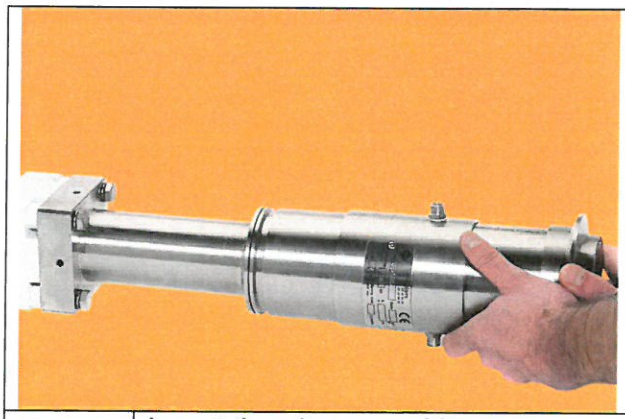

5	Insert the sleeve and its piston on the tenon

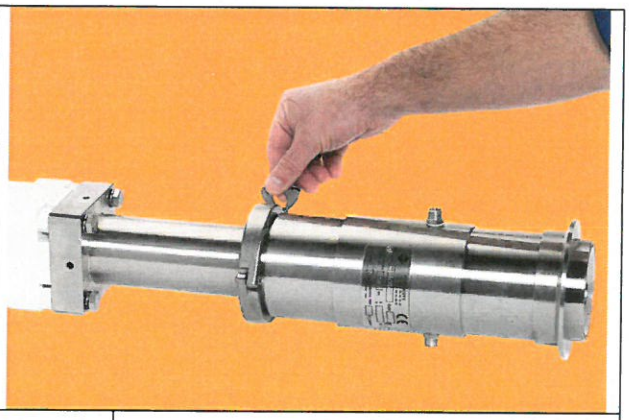

6	Fit the collar clamp and tighten it

PCM – 17 Rue Ernest Laval – BP 35 – 92173 VANVES CEDEX –
tel : 33 1 41 08 15 15 Fax : 33 1 41 08 15 00
APE 291 B – Capital : 10 154 970 euro – TVA FR 88 572 180 198

Disassembly

1	Take hold of the piston

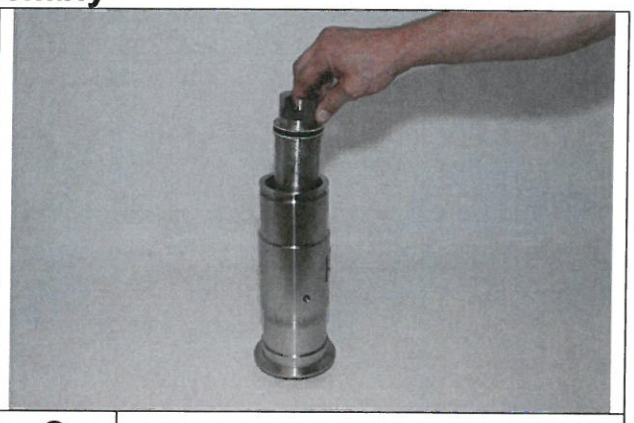

2	Pull the piston upwards

3	Extract the piston from the sleeve

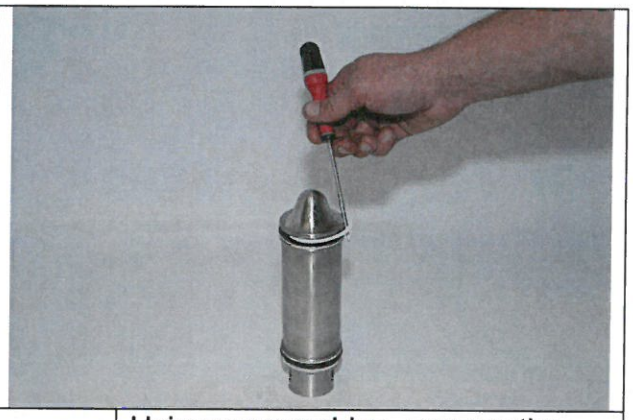

4	Using a screwdrive, remove the anti-extrusion rings

5	Remove the O-ring

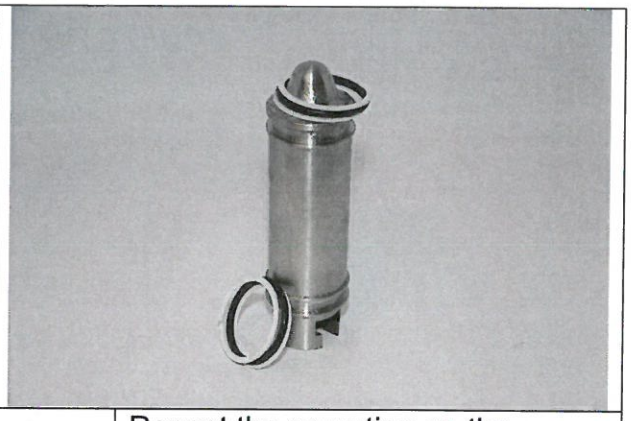

6	Repeat the operation on the second groove

PCM – 17 Rue Ernest Laval – BP 35 – 92173 VANVES CEDEX –
tel : 33 1 41 08 15 15 Fax : 33 1 41 08 15 00
APE 291 B – Capital : 10 154 970 euro – TVA FR 88 572 180 198

Assembly

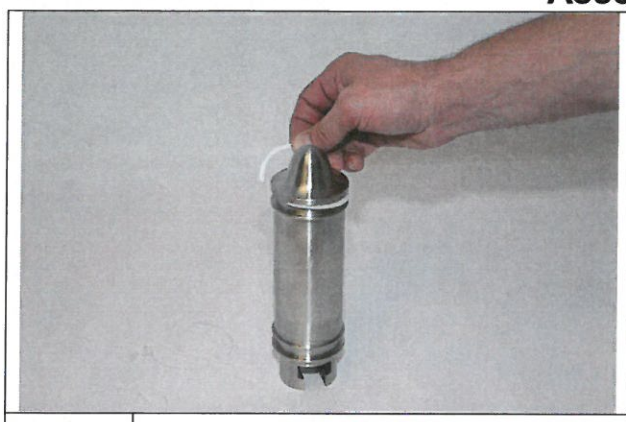

1	Fit the anti-extrusion ring

2	Fit the O-ring

3	Fit the second anti-extrusion ring (block the O-ring) and repeat the operation on the second groove

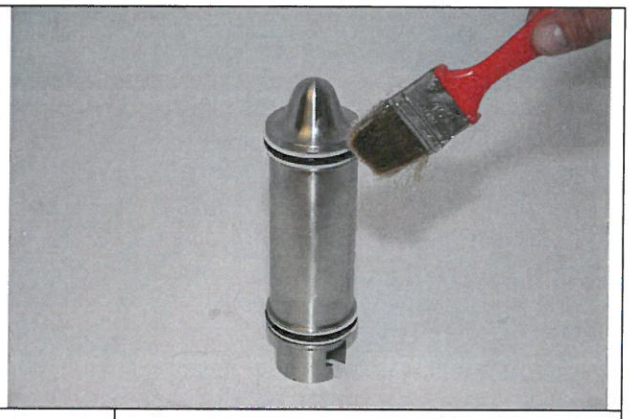

4	Grease the O-rings and the rings on both grooves

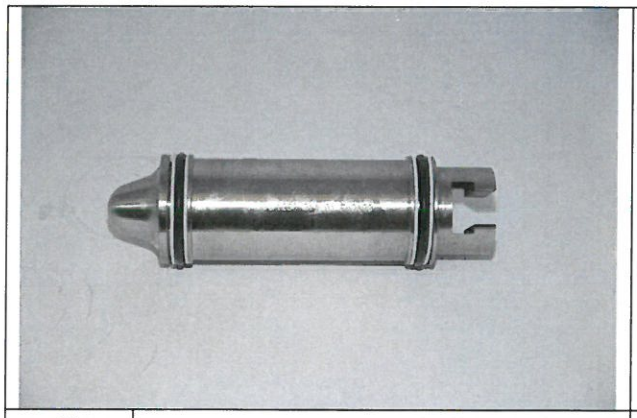

5	The piston is ready

6	Introduce the piston into the sleeve

PCM – 17 Rue Ernest Laval – BP 35 – 92173 VANVES CEDEX –
tel : 33 1 41 08 15 15 Fax : 33 1 41 08 15 00
APE 291 B – Capital : 10 154 970 euro – TVA FR 88 572 180 198

			
7	Insert the piston into the sleeve, taking care not to damage the anti-extrusion rings	**8**	Insert the piston, leaving access to the tenon

PCM – 17 Rue Ernest Laval – BP 35 – 92173 VANVES CEDEX –
tel : 33 1 41 08 15 15 Fax : 33 1 41 08 15 00
APE 291 B – Capital : 10 154 970 euro – TVA FR 88 572 180 198

PCM Keep it moving

INSTRUCTION MANUAL

KEEP THIS DOCUMENT FOR FURTHER REFERENCE

DOSYMIX – DG
SEN462-020

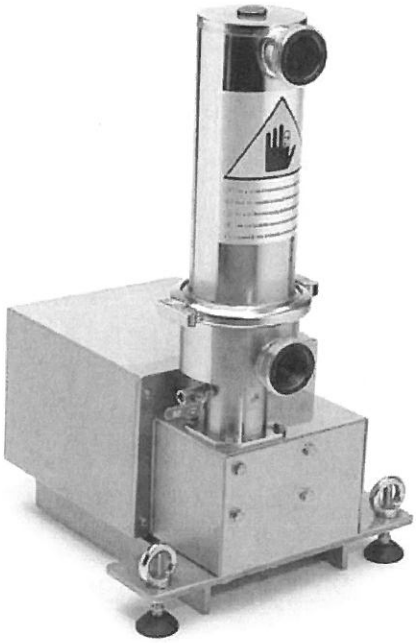

TRANSLATION OF ORIGINAL INSTRUCTION

Revision	Date	Subject	Writer
03	18/02/11	Added valves Burkert 2031 and 2103	MB
02	24/08/10	Update of mechanical seal ref and drawing	MB
01	31/05/10	Integration of 2006/42/EC directive	MB

Reference:	***NIPFDM0403A***	*Approval date: February 2011*

PCM -17 rue Ernest Laval BP 35 - 92173 Vanves Cedex France
Phone : +33 (0)1 41 08 15 15 – Fax : +33 (0)1 41 08 15 00
www.pcm.eu - contact@pcm.eu

CONTENTS

Rep.	Description
A	Reference number
B	Supply voltage
C	Mains frequency
D	Max. pressure (not applicable for the mixers)
E	Internal capacity of the mixer
F	Weight of mixer
G	Machine manufacture date
H	Motor power
I	Air consumption (not applicable for the mixers)
J	Working temperature

1. OPERATING PRINCIPLE AND CHARACTERISTICS

1.1 Operating principle

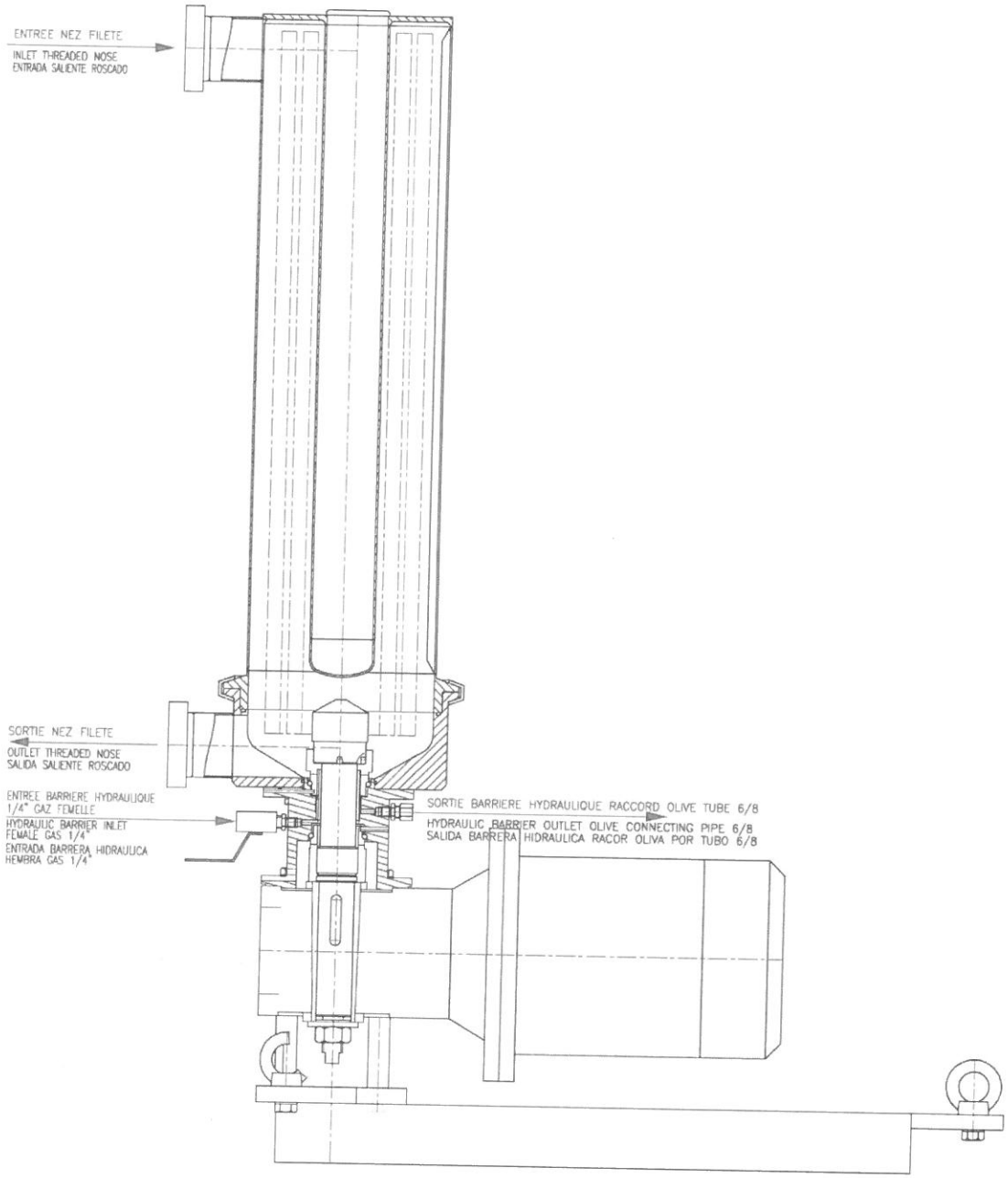

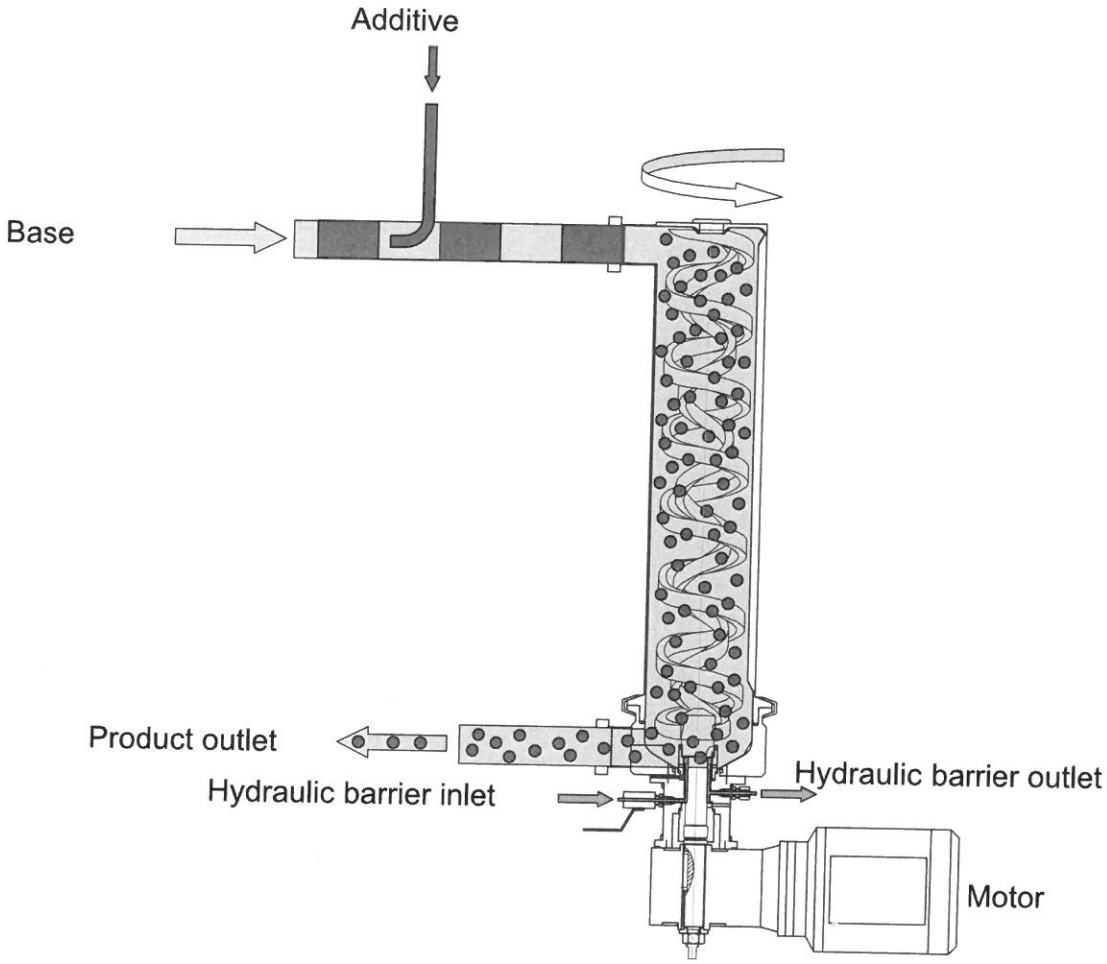

The **DOSYMIX** is a continuous dynamic mix.

A moving part consists of two simultaneously driven reverse-pitch helixes, which creates co and counter circulation inside the mixer.

This principle produces a uniform and gentle mixing action for delicate products.

Circulation is generated by the flow line moving through the mixer (the rotation of the moving part does not generate flow).

Additives must, if possible, be injected at the center point of the hose, in the opposite direction to the inflow and in close proximity to the mixer.

Different solutions for injecting additives into a base:

- Continuous base injection and pulsed additive injection.
- Continuous base injection and continuous additive injection.
- Pulsed base injection and pulsed additive injection.

1.2 Characteristics

1.2.1 Technical characteristics

	DM200	DM1000	DM2000	DM4000	DM8000
Internal capacity (litres)	0.60	3.50	8.00	17.00	23.00
Weight (kg)	23	36	50	81	140
CIP rate (m3/hr)	3	13	13	22	30
Induction and discharge connections	SMS 25	SMS 51	SMS 51	SMS 63	SMS 76
	DIN 25	DIN 50	DIN 50	DIN 65	DIN 80
	CLAMP 25	CLAMP 51	CLAMP 51	CLAMP 63	CLAMP 76

Mixer:

Working temperature:	90°C max. in production mode 140°C max. for 5 mins in static mode
Rotation speed:	145 rpm

Power:

Supply voltage:	220 / 440V three-phase without neutral
Frequency:	50 Hz – 60 Hz

Hydraulic barrier:

Connection olive connector:	Inlet: ¼ female gas connector, outlet: 6/8

▪ In production mode:

Fluid:	Mains water
Quality:	Food quality (see PCM specifications)
Rate:	10 litres/hr required
Pressure:	Network, 2 bars max., vented into air

Cleaning in Place (CIP) *see § 2.3:*

Pressure:	3 bars max.

The characteristics of the mixer (rate, pressure, rotation speed, construction etc.) should not be modified without the written consent of our customer service department.

1.2.2 Constructional characteristic

These are set out in the table below.

DOSYMIX dynamic mixer		
Parts	**Material**	**AFNOR designation**
Helix::	Stainless steel 316L	Z3CND 17 11
Mechanical seal :	Carbon-graphite Silicon carbide	
Flange base:	Stainless steel 316L	Z3CND 17 11
Seals: - Connections - Packing - Casing	ETHYLENE PROPYLENE (FKM) Silicone (VMQ)	EPDM
Casing:	Stainless steel 316L	Z3CND 17 11

The designation of the stainless steel material complies with the **AFNOR** standard.

PCM mixers fitted with a mechanical sealing system, a STAINLESS STEEL helix, a STAINLESS STEEL casing, a STAINLESS STEEL flange base and connectors (SMS, DIN, CLAMP) meet the food quality and hygiene criteria of the entire food-processing industry.

1.2.3 Operating characteristics

The shapes and interior finish of the **PCM** POMPES dynamic mixers ensure simple and quick in-line cleaning. SMS, DIN or CLAMP type connectors are used, the most commonly used connectors in the food processing industries.

They are used in all industries that need high levels of hygiene to carry delicate, viscous, heterogeneous or loaded liquids without deterioration.

The maximum working temperature of the mixer is 90°C in production mode.

1.2.4 General dimensions

Classification	Space occupied (mm)																					
	A	B	C	D	E	F	G	H	I	J	K	L	M	N	O	P	Q	R	S	T	U	V
DM200	147	101	100	461	477	110	320	8	33	420	310	105	274	88	266	58	410	478	76	76	155	360
DM1000	365	111	100	695	724	110	320	10	41	445	350	125	274	88	280	66	443	511	100	123	175	400
DM2000	641	126	100	986	1020	110	320	10	41	445	350	125	274	88	280	66	443	511	130	140	175	400
DM4000	690	137	130	1101	1141	135	310	10	40	681	390	155	300	85	300	85	660	751	170	188	210	450
DM8000	738	144	150	1186	1232	160	365	15	45	681	440	190	330	110	368	105	678	755	185	219	240	500

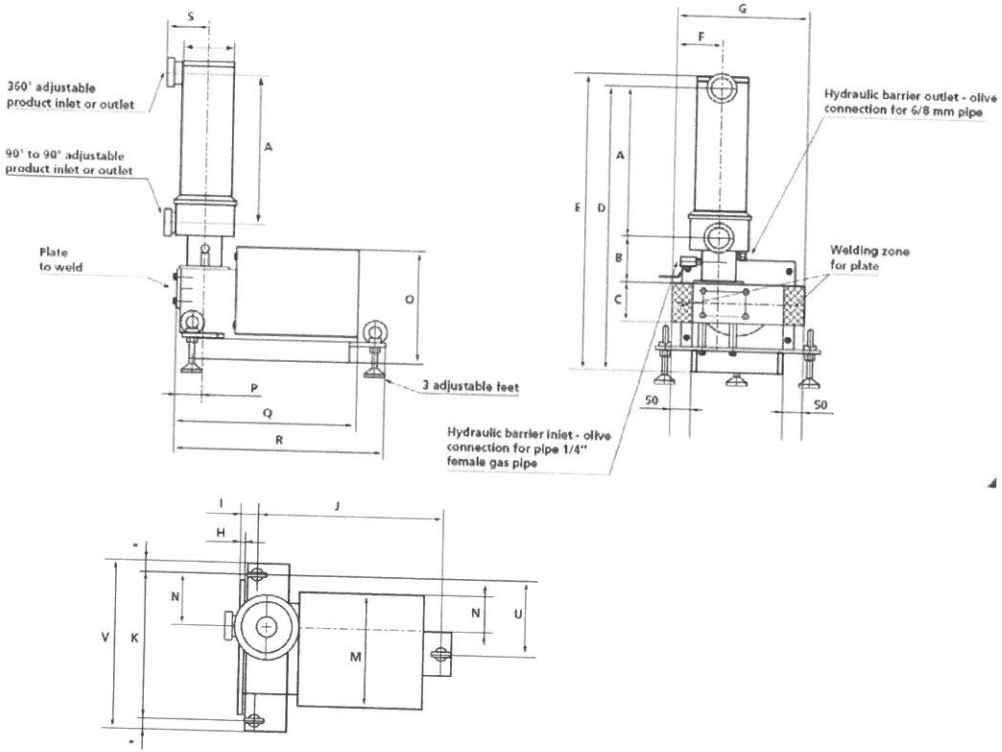

2. RECOMMENDATIONS

2.1 Assembly

Vertical assembly of mixer with the gear motor in the bottom position.

2.2 In production mode

Do not operate the **DOSYMIX** when empty and without water circulating in the hydraulic barrier circuit.

Product circulating in the upward or downward direction.

Preferential direction of rotation: exterior helix rising if flow is descending and vice versa if flow is ascending.

2.3 In Cleaning in Place (CIP) mode

Traditional dairy type CIP: the mixer turns when the CIP solution is delivered and does not when there is no solution.

The CIP rate is equivalent to the rate required by the **DOSYMIX** connection hose. Speed of passage 2 m/sec, see *§ 1.2.*

Option to sanitize or sterilize the mixer (machine switched off), max. 140°C for 5 min.

2.4.1.2 The role of the hydraulic barrier

IN PRODUCTION:

It forms a bacteriological barrier between the product and the air outside the DOSYMIX.

The external air is never in contact with the seals which are connected with the product to be distributed.

IN CIP:

It completely cleans the washers in contact with the product.

2.4.2 Managing the distribution cycle and the hydraulic barrier's circulation controller

2.4.2.1 In production

A) Managing the circulation controller

During production, the circulation of water in the hydraulic barriers is essential. In the absence of water, the automatic controls of the circulation controller must halt the DOSYMIX after 30 seconds and indicate the fault.

B) Hydraulic barrier flow

The flow required is 10 litres/hour maximum and at minimum a continuous flow. The input pressure must not exceed 2 to 3 bars and the outlet of the hydraulic barrier (the sensor of the circulation controller) must be at atmospheric pressure.

2.4.2.2 In CIP

A) Managing the circulation controller

During CIP, it very often happens that the circulation of the solutions is zero between two phases.

If the circulation stops, it is not essential to declare the DOSYMIX faulty or to alert the process sequence.

Information should be sent to the process to report the circulation fault.

B) Flow of the hydraulic barrier

During CIP, the circulation of water in the hydraulic barriers can be maximum.

The flow required is 10 litres/hour maximum and at minimum a continuous flow. The input pressure must not exceed 2 to 3 bars and the outlet of the hydraulic barrier (the sensor of the circulation controller) must be at atmospheric pressure.

2.4.2.3 In SIP

A) Managing the circulation controller

The circulation of the solutions is not supervised during SIP.

B) Flow of the hydraulic barrier

During SIP, the circulation of hot water in the hydraulic barriers can be maximum.

The flow required is 10 litres/hour maximum and at minimum a continuous flow. The input pressure must not exceed 2 to 3 bars and the outlet of the hydraulic barrier (the sensor of the circulation controller) must be at atmospheric pressure.

For steam, do not exceed the pressure corresponding to 140°C.

2.4.3 Quality of water recommended for the hydraulic barrier

This water will be in contact with the mixed product if there is a leak. For this reason, the water used must not contain any:

- Pathogens dangerous to health.
- Micro-organisms increasing the risk of pollution such as moulds, coliforms, etc.
- Sources of metal capable of catalysing fats (iron, manganese, etc.).

Data and specifications (Source Dairy Processing handbook)

Criteria	Water for Dairy product
Coliform bacteria	0
Gelatine bacteria	0
Sediment mg/l	None
Turbidity	None
Smell	None
Taste	None
Colour strength	<10
Dry matter mg/l	<500
Permanganate consumption mg/l	<10
Ammonium mg/l	-
Calcium + Magnesium	<100
Total hardness CaCO3 mg/l	<100
Iron mg/l	0.1
Manganese mg/l	0.05
Copper mg/l	0
Aluminium mg/l	0.1
Zinc mg/l	0
Bicarbonate mg/l	<80
Chloride mg/l	-
Nitrates mg/l	-
Nitrites mg/l	-
Fluorides mg/l	1
Chlorine surplus mg/l	0
Algae protozoa etc	None
Toxic matter	None
PH	7 _ 8,5

2.4.4 Setting and controlling the valve supplying the HB (GEMU 658)

2.4.4.1 Valve closed

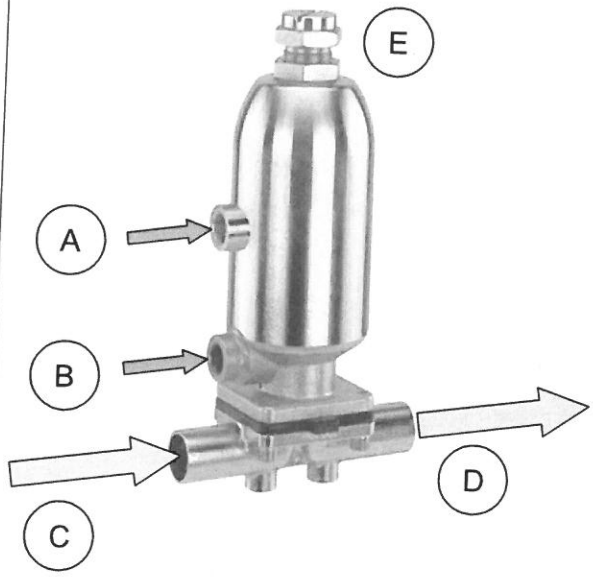	
	A: Compressed air =0
	B: Compressed air =0
	C = CIP solution or water inlet
	D = to hydraulic barrier circuit

2.4.4.2 Valve open in production (reduced flow)

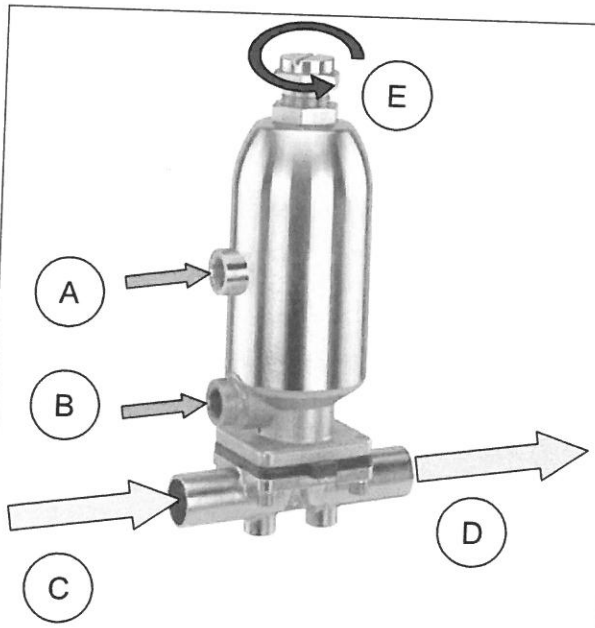	E: Set the flow to 10 litres/hour
	A: Compressed air =1
	B: Compressed air =0
	C = CIP solution or water inlet
	D = to hydraulic barrier circuit

2.4.4.3 Valve open in CIP (full flow)

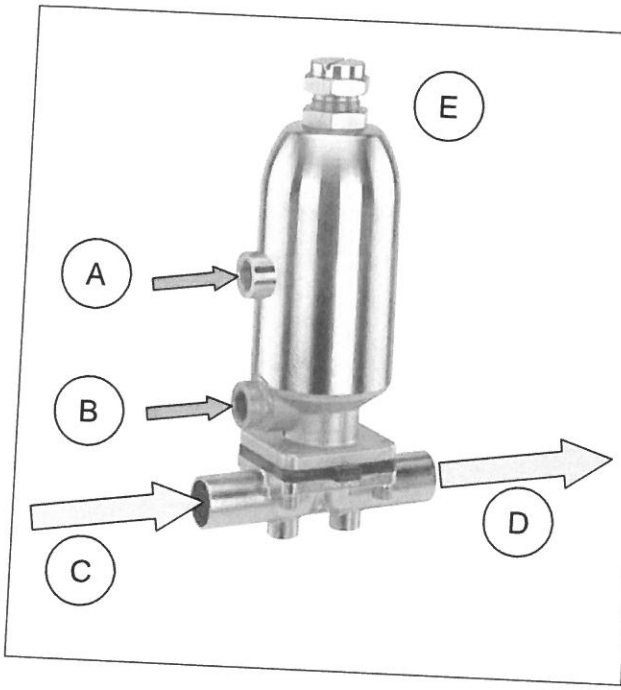

A: Compressed air =0
B: Compressed air =1
C = CIP solution or water inlet
D = to hydraulic barrier circuit

2.4.5 Setting and controlling the valve supplying the HB (BURKERT VALVE 2031)

2.4.5.1 Valve closed

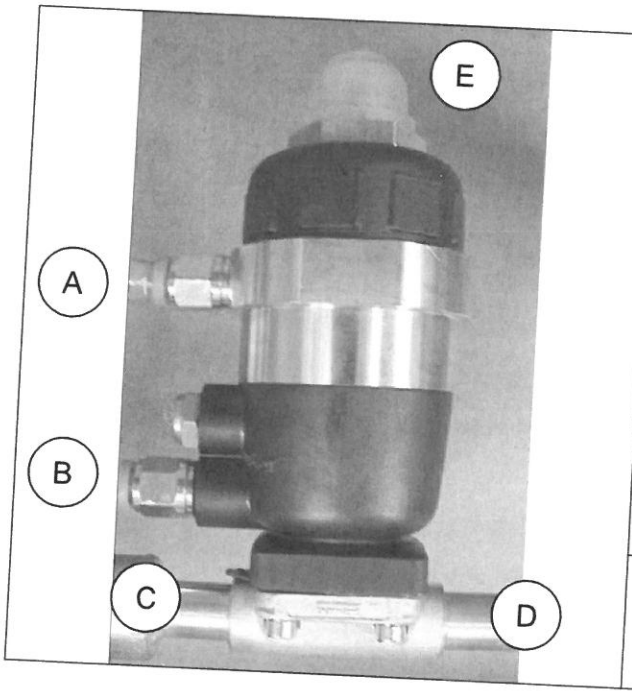

A: Compressed air =0
B: Compressed air =0
C = CIP solution or water inlet
D = to hydraulic barrier circuit

2.4.5.2 Valve open in production (reduced flow)

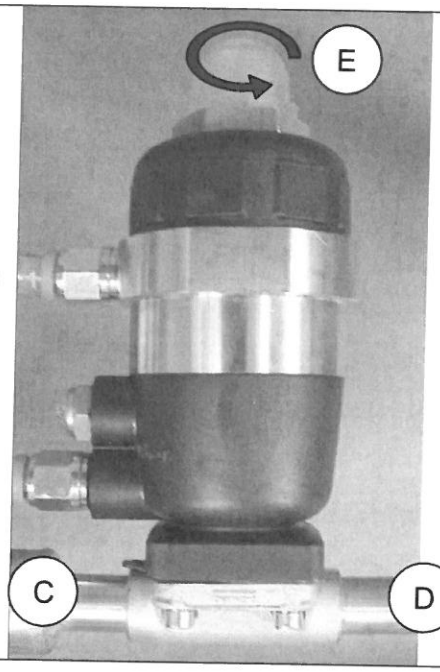

E: Set the flow to 10 litres/hour
A: Compressed air =1
B: Compressed air =0
C = CIP solution or water inlet
D = to hydraulic barrier circuit

2.4.5.3 Valve open in CIP (full flow)

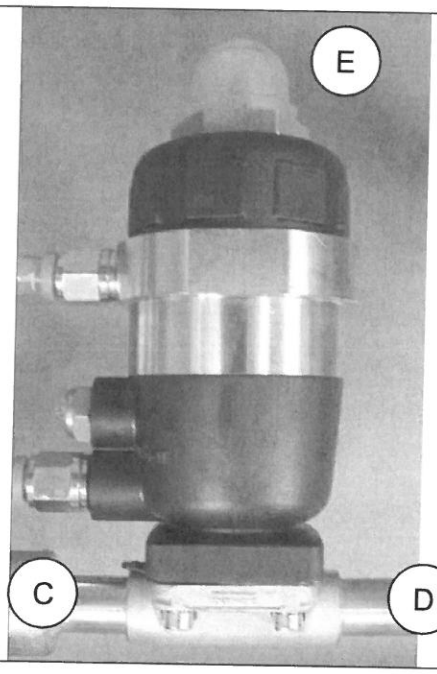

A: Compressed air =1
B: Compressed air =1
C = CIP solution or water inlet
D = to hydraulic barrier circuit

2.4.6 Setting and controlling the valve supplying the HB (BURKERT VALVE 2103)

2.4.6.1 Setting of flow

1. Dismantle the cover 1
2. Unscrew the nut 3
3. Set the flow with the nut 2
4. Screw the nut 3
5. Assemble the cover 1

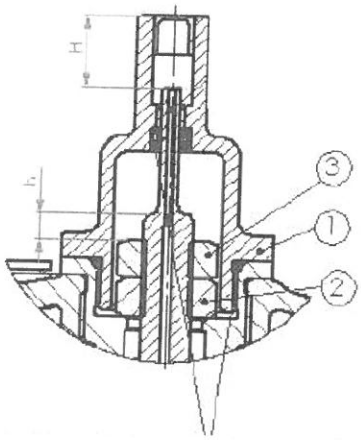

FLOW

KV –

Position of nuts

KV +

Do not damage sealing during cover assembly

2.4.6.2 Valve closed

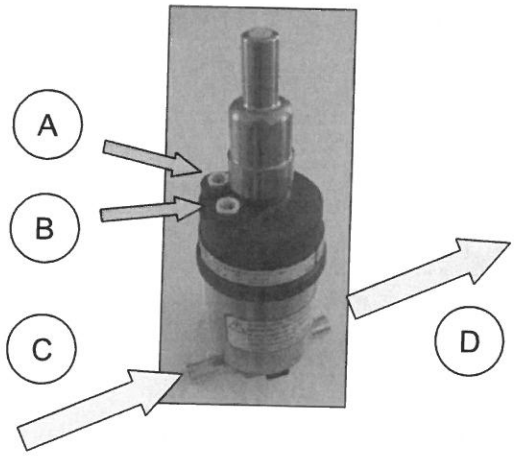

A: Compressed air =0
B: Compressed air =0
C = CIP solution or water inlet
D = to hydraulic barrier circuit

2.4.6.3 Valve open in production (reduced flow)

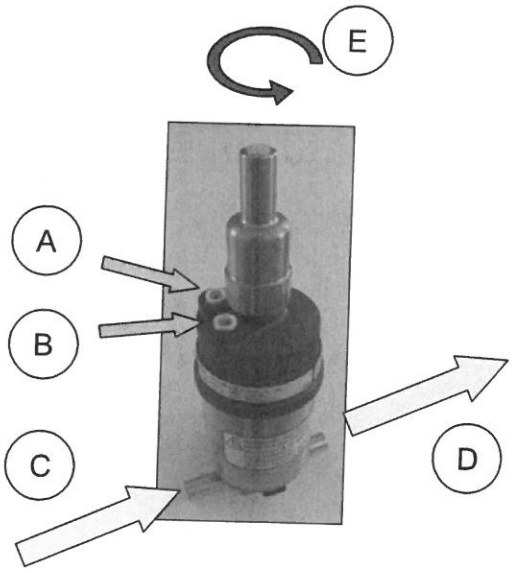	E: Set the flow to 10 litres/hour
	A: Compressed air =1
	B: Compressed air =1
	C = CIP solution or water inlet
	D = to hydraulic barrier circuit

2.4.6.4 Valve open in CIP (full flow)

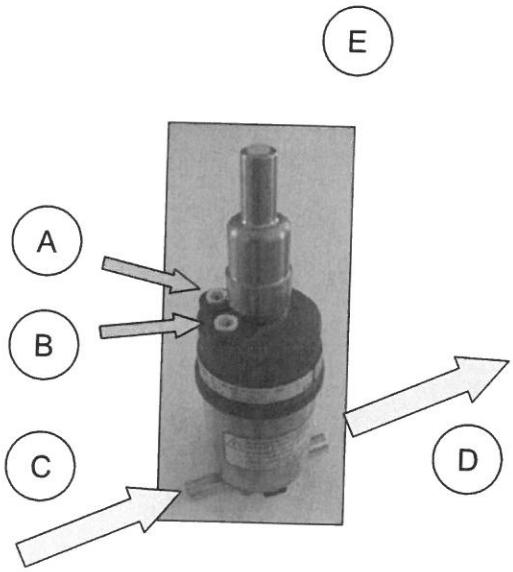	
	A: Compressed air =0
	B: Compressed air =1
	C = CIP solution or water inlet
	D = to hydraulic barrier circuit

2.4.7 Adjusting the circulation controller

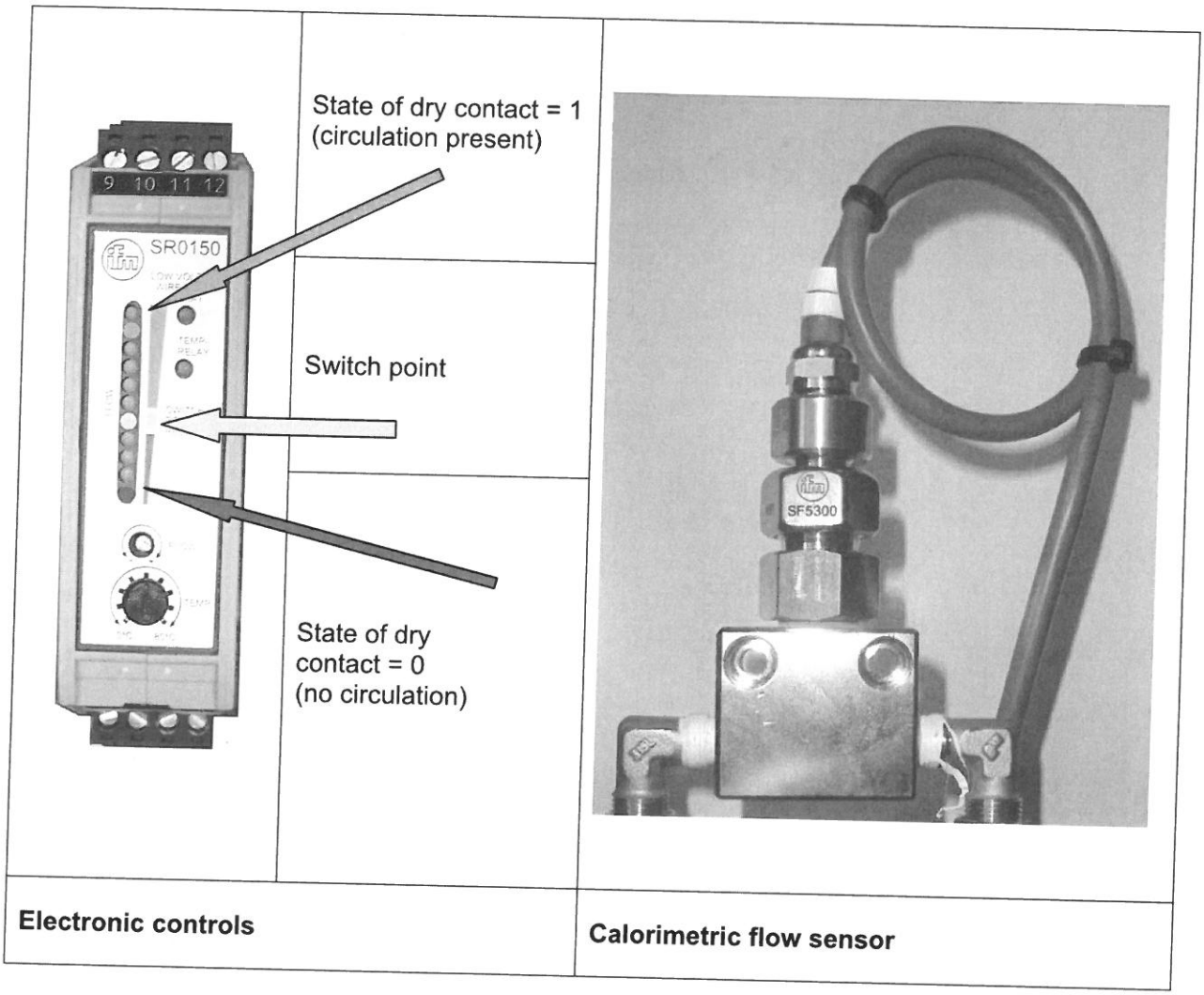

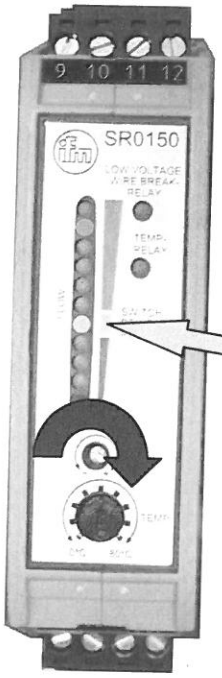	1 - Adjust the water flow in the hydraulic barrier circuit: 10 litres/hour maximum, continuous flow minimum. 2 - Turn the adjustment screw till you reach the switch-point to logic level 1 (see above). **The electronic control is now calibrated.**
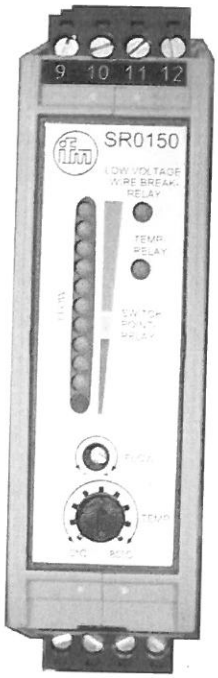	Checking the calibration of the electronic controls. 3 – Cut off the water to the Hydraulic Barrier Ensure that the LED has returned to logic level 0.

2.5 Lubrication

The lubrication used for the assembly of the unions or mechanical seals must be food quality and comply with staff safety standards.

2.6 Mixer CIP and SIP recommendations

The purpose of sanitation is to reduce microorganisms to acceptable levels. This is performed by a heat treatment or chemically with disinfectants.

The sanitation and CIP systems were developed by the dairy industry in the 1950s with a view to reducing cleaning times.

Today, these systems have virtually replaced manual cleaning. They can be separate or combined.

Cleaning in place has three objectives:

1. To remove organic matter (sugar, protein, fat etc.).
2. To remove mineral matter.
3. To reduce the number of micro organisms.

Example of a cleaning in place procedure:

1. Rinsing with cold water to remove deposits.
2. Alkaline detergents e.g. caustic soda (concentration of 2~3%) at 80~85°C for approximately 20 minutes to remove the organic matter.
3. Intermediate rinsing with water.
4. Acid detergents, e.g. HNO_3 (concentration of 1~2%) at 70~75°C for approximately 10 minutes to remove the mineral matter.
5. Final rinsing.

Phases (2) and (4) can be combined by using a product that is both an organic solvent and a de-scaler.

3. INSTALLATION

3.1 Preparing the mixer

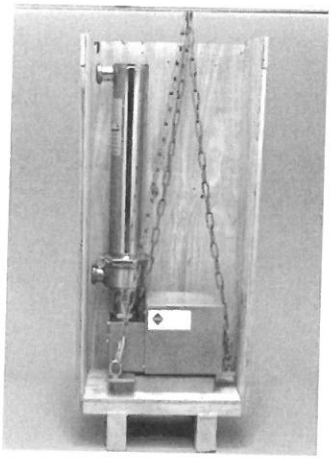

Remove the mixer from the crate

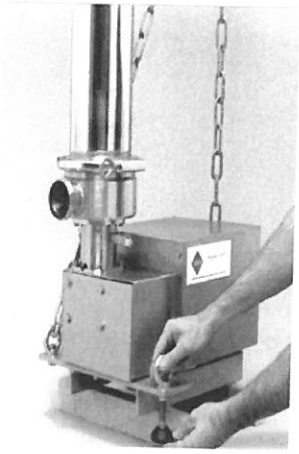

Assemble the feet supplied with the mixer

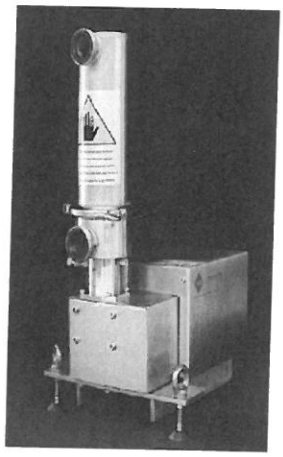

Ensure the mixer is level

Precautions before connecting the mixer:

DOSYMIX mixers are designed to operate vertically, with the gear motor in the bottom position. They can either be placed on the ground using the mounting provided for this purpose or wall-mounted using the fixing plate (for assembling the fixing plate, see the ASSEMBLY-DISMANTLING section). Hoisting eyes are provided for handling.

The following is recommended:

- Arrange for the products to be mixed to be introduced from the top, thereby providing natural drainage at the end of production.
- Arrange for the external helix to rise when rotating.
- Level the mixer before connecting up the utilities (water, electricity).
- Plan for an access area for machine control and maintenance.
- Check that the different constituent elements of the machine are correctly attached.
- Avoid assembling the mixer in places where the ambient temperature is incompatible with the maximum working temperature.

ATTENTION!! Remember to remove the plastic protection inside the casing before switching on the dynamic mixer.

3.2 Connecting the hydraulic barrier

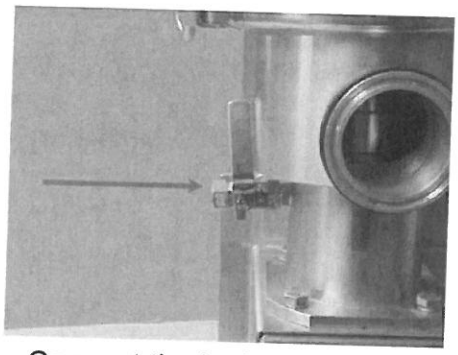

Connect the hydraulic barrier water supply to the quarter turn valve

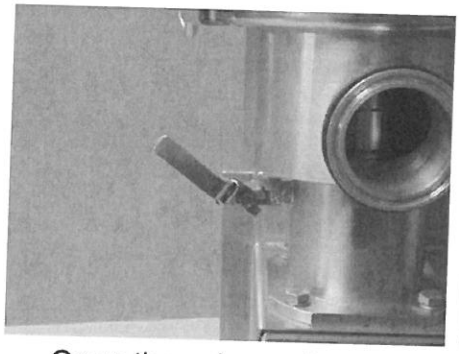

Open the valve as far as necessary to obtain the water flow required to ensure the seal is well lubricated (10 l/hr minimum)

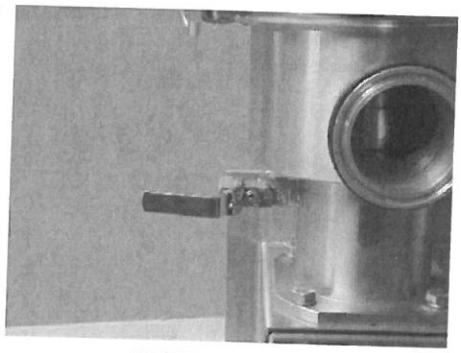

ATTENTION:
During operation, the valve must always be in the open position

ATTENTION!! The valve must be fully open during Cleaning in Place (NEP / CIP) operations in order to guarantee the optimum cleaning of the mixer.

Hydraulic connection diagram:

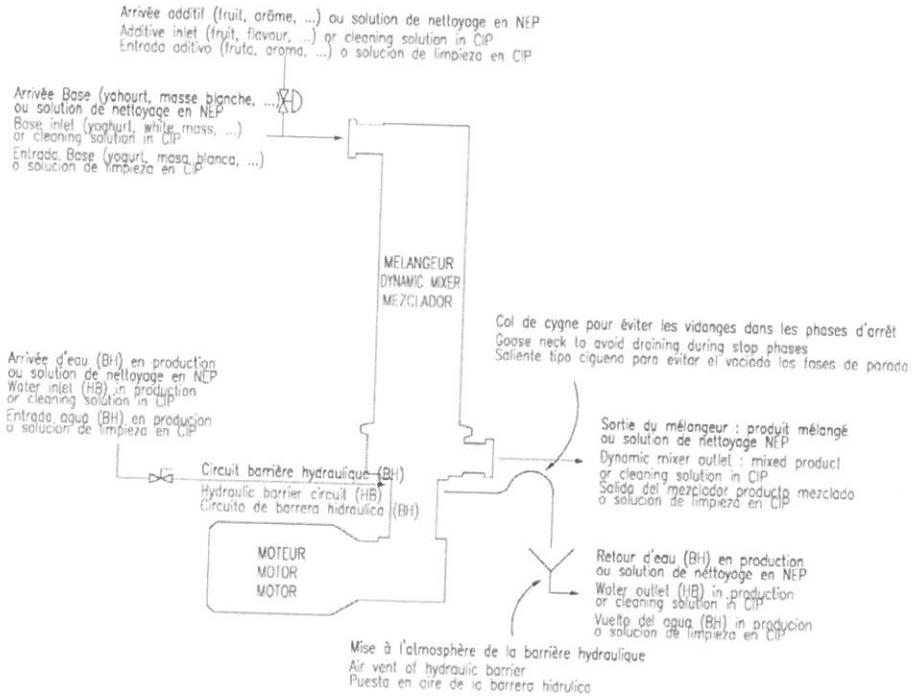

3.3 Connecting the motor

ATTENTION!! Before connecting, ensure that the power supply is compatible with the characteristics on the motor identification plate. The wiring diagram is found in the motor terminal block.

Unscrew the top cover of the mixer (see below) to access the motor.

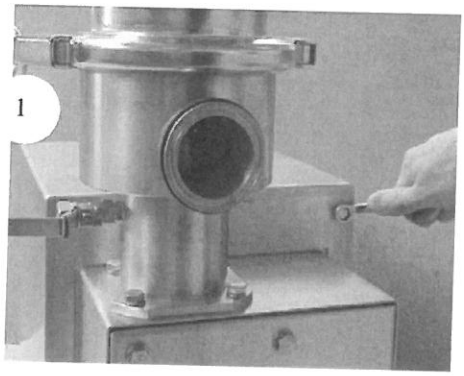

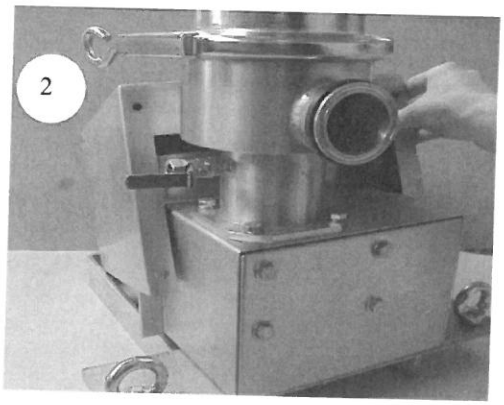

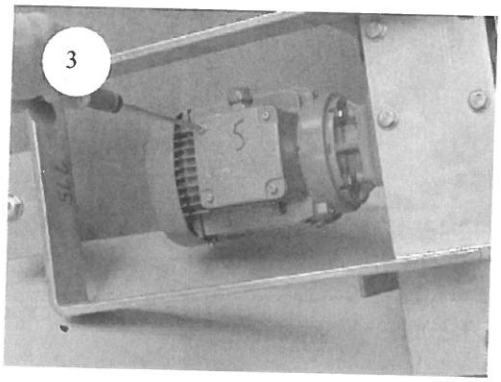

Once you have accessed the motor, unscrew the terminal block cover, paying attention to the sealing point.

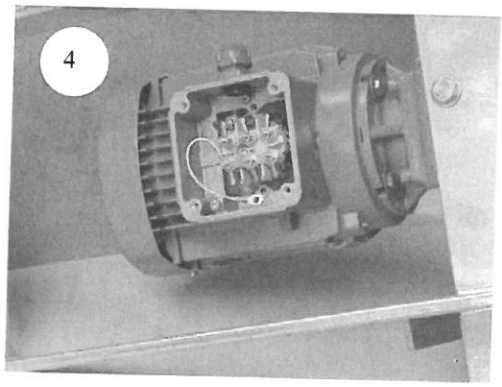

Before connecting, pay attention to the position of the electrical strips and the rotation direction of the motor.

Three-phase motor:

Coupling the motor onto a 400V network in a "Star" configuration.

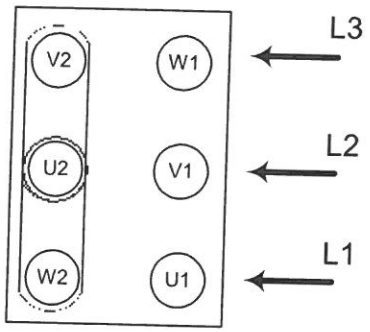

Coupling the motor onto a 220V network in a "Triangle" configuration.

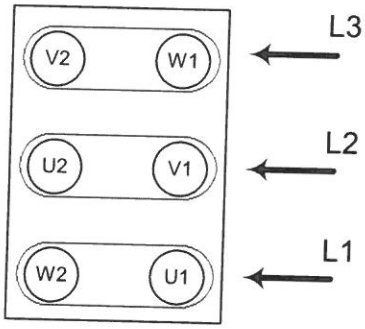

ATTENTION!! All our mixers are delivered with a star assembly kit (400 volt mains supply). Don't forget to earth the mixer (yellow and green wire).

3.4 Starting the mixer for the first time

Before starting the mixer, check the following:

Check that water is circulating in the hydraulic barrier circuit in order to prevent damage to the mechanical seals.

Check that the valves installed upstream and downstream of the mixer are open.

ATTENTION!! Never operate the mixer without water circulating in the hydraulic barrier circuit (mechanical seals will deteriorate prematurely).

Connect the mixer to the mains.

For the first few minutes of operation, check the following:

- The mixer is not vibrating.
- There are no abnormal noises.
- The seal system is working (no water is leaking at the mechanical seal or connection points).
- The gear motor is not overheating abnormally.

ATTENTION!! Always ensure the hoses upstream and downstream of the mixer are clean and free of steel particles before using for the first.

DISMANTLING THE MOVING PART OF THE LOWER SEAL

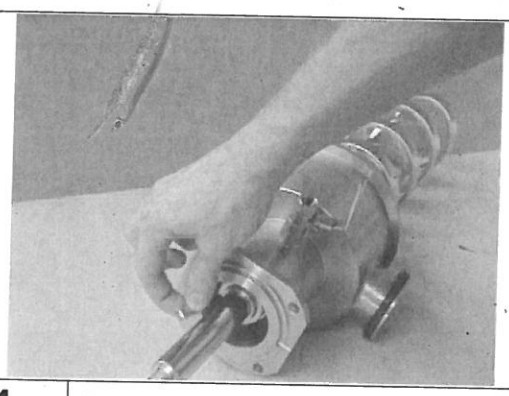

1	Remove the helix shaft key

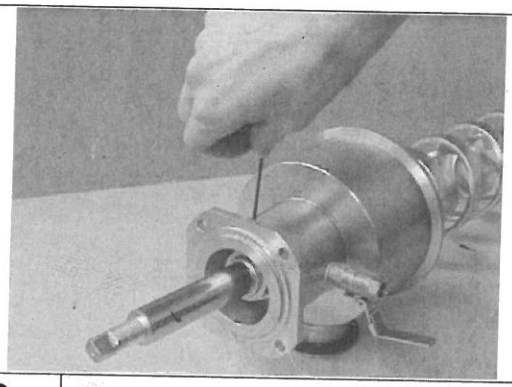

2	Unscrew the two helix support blocks

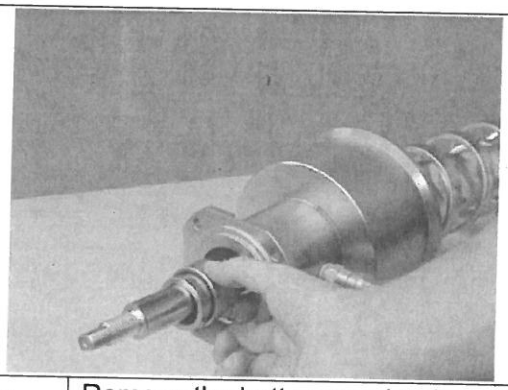

3	Remove the bottom mechanical seal from its shaft

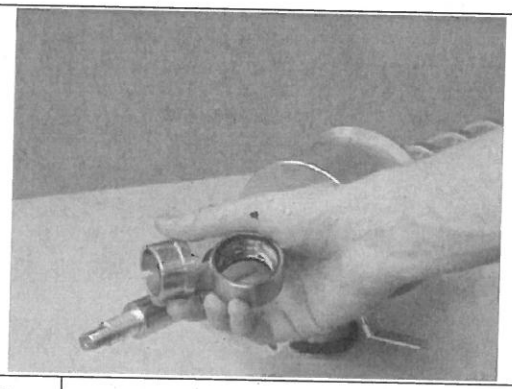

4	View of the bottom mechanical seal

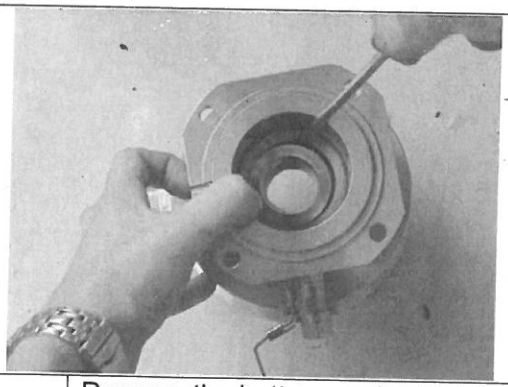

5	Remove the bottom seal using a small screwdriver, taking care not to damage the block

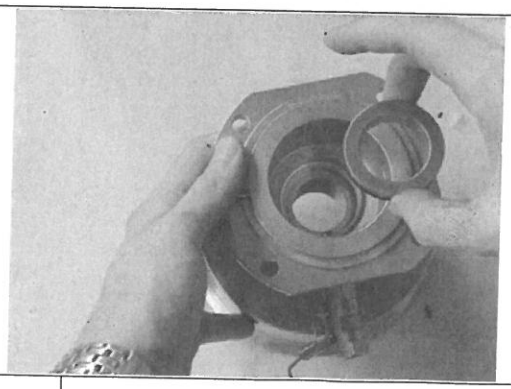

6	Carefully remove the seal from is housing

DISMANTLING THE MOVING PART OF THE TOPSEAL

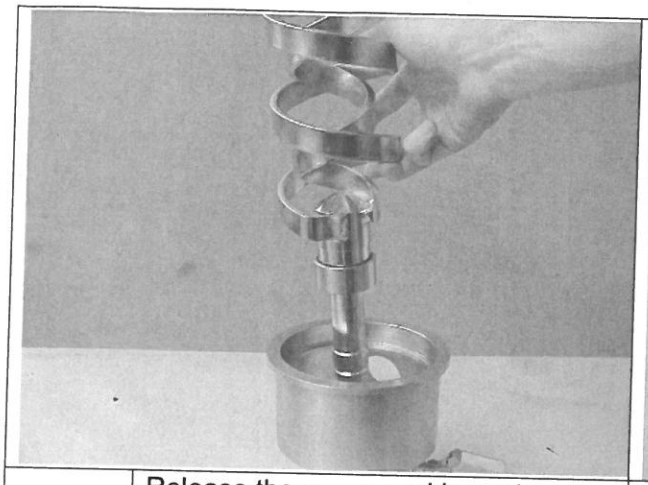

1	Release the upper packing using a small screwdriver, taking care not to damage the assembly

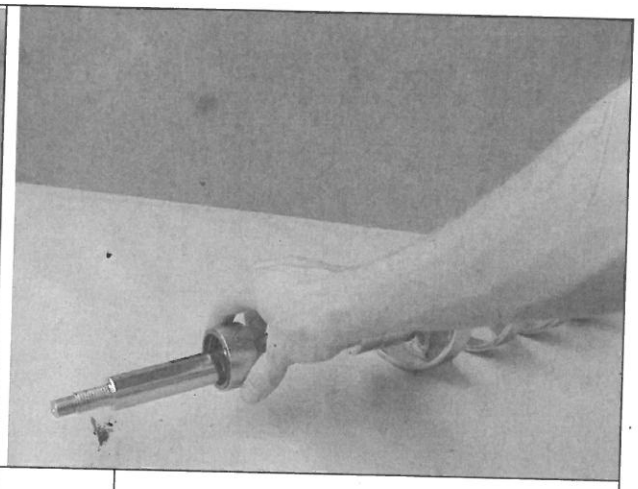

2	Take the packing out gently

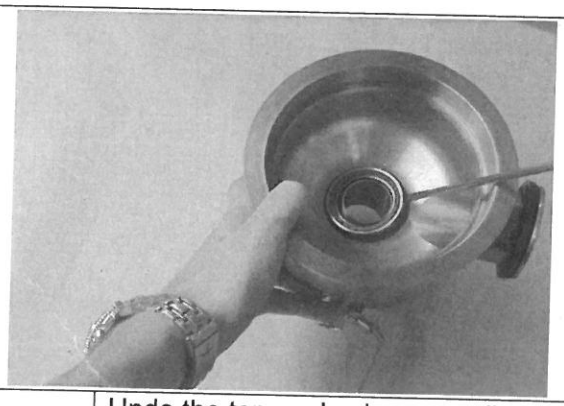

3	Undo the top seal using a small screwdriver, taking care not to damage the block

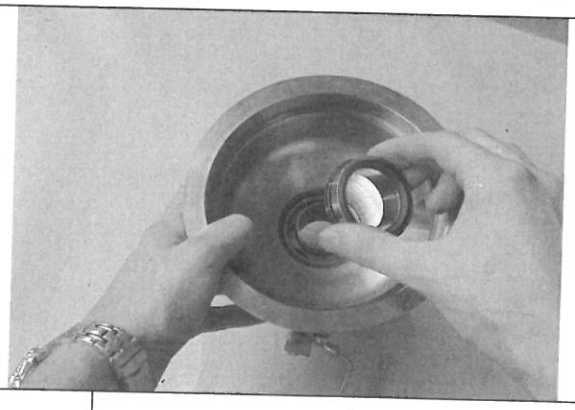

4	Carefully remove the seal

ASSEMBLING THE FIXED PART OF THE TOP SEAL

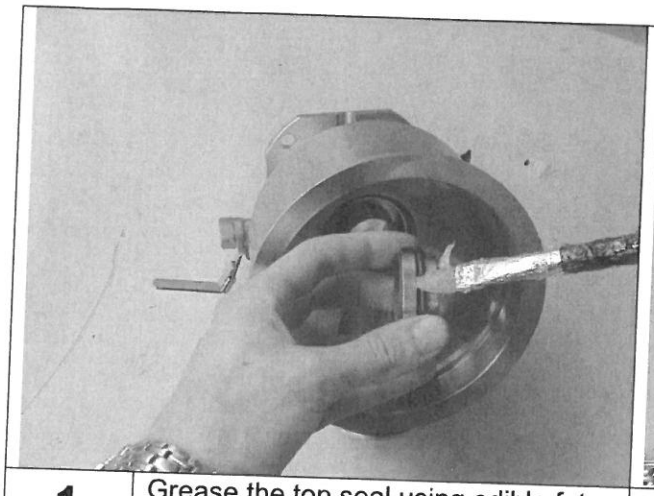

1	Grease the top seal using edible fat alimentary grease

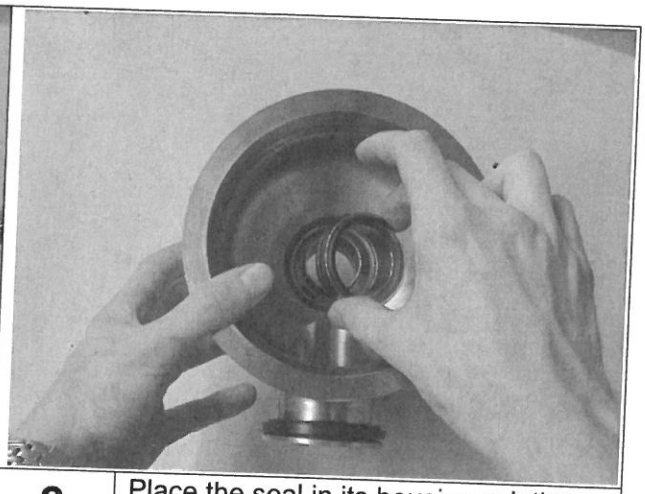

2	Place the seal in its housing relative to the indexing pin

ASSEMBLING THE FIXED PART OF THE BOTTOM SEAL

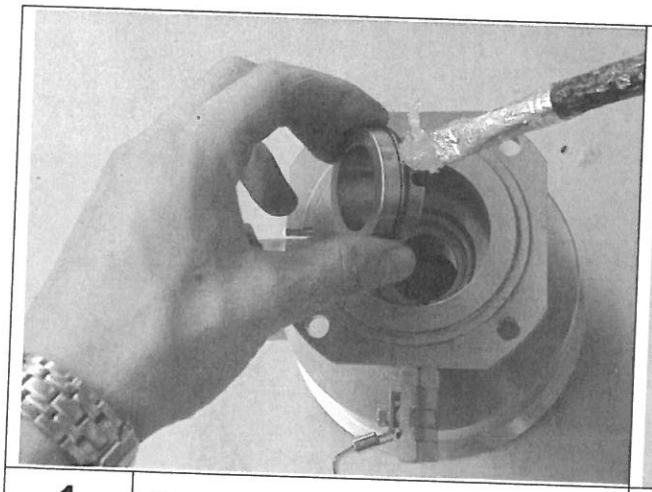

1	Grease the seal using edible fat

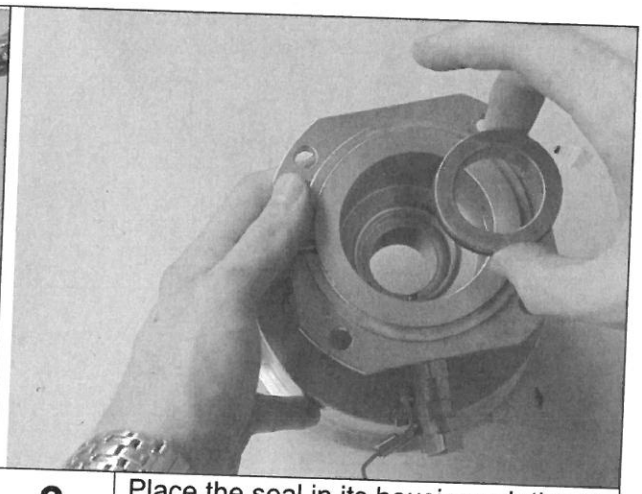

2	Place the seal in its housing relative to the indexing pin

ASSEMBLING THE MOVING PART OF THE TOP SEAL

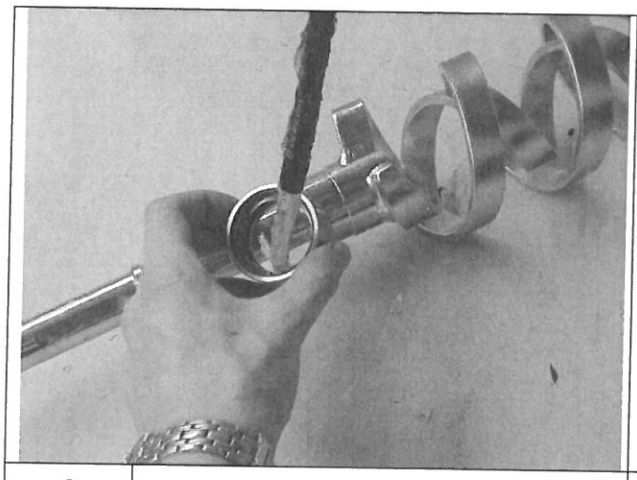

1	Grease the seal using edible fat

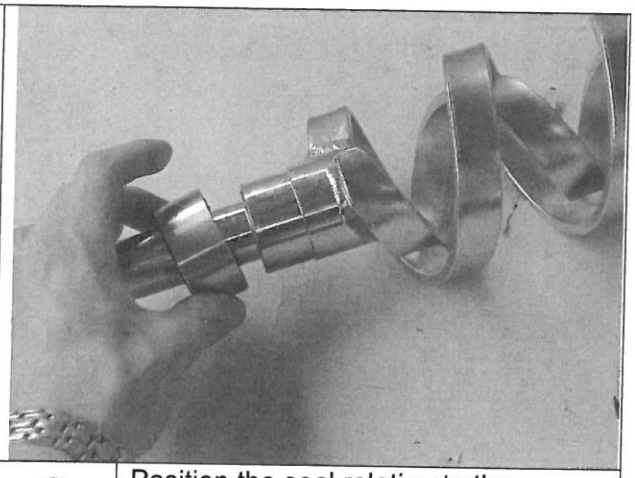

2	Position the seal relative to the indexing pin

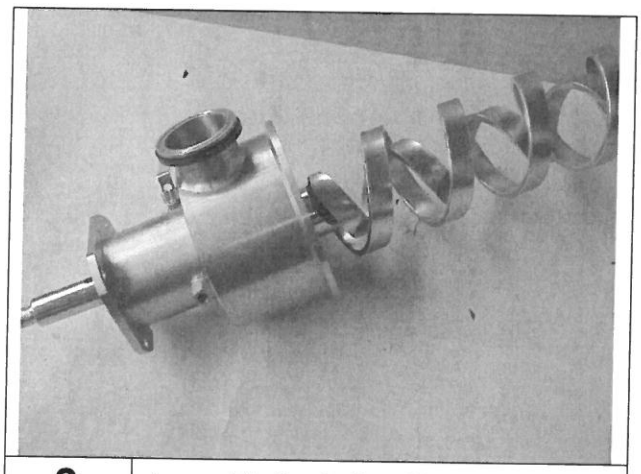

3	Assemble the helix with the block

ASSEMBLING THE MOVING PART OF THE BOTTOM SEAL

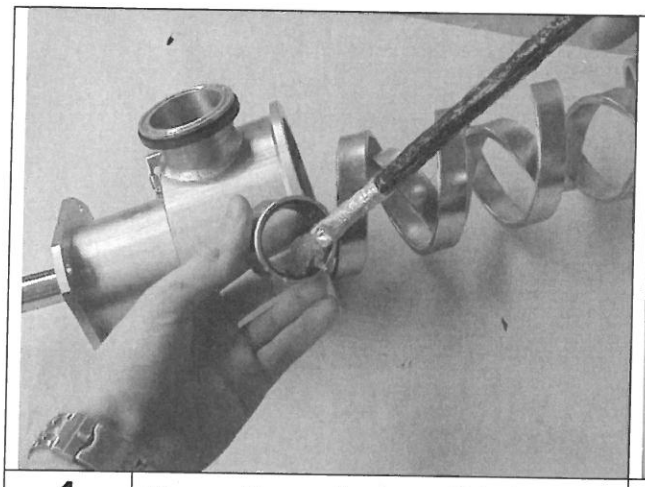

1	Grease the seal using edible fat

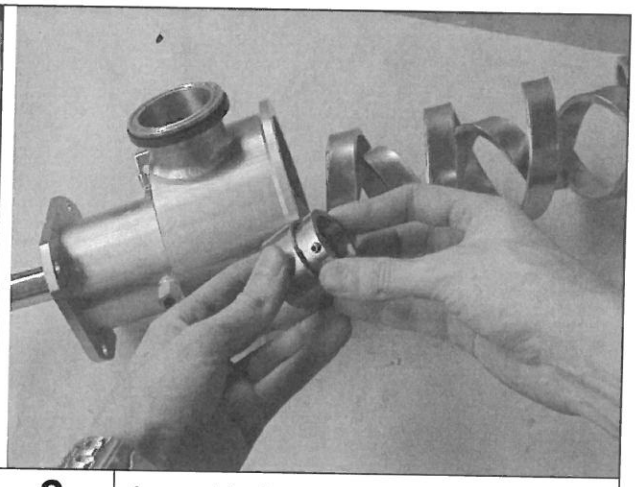

2	Assemble the two parts of the seal

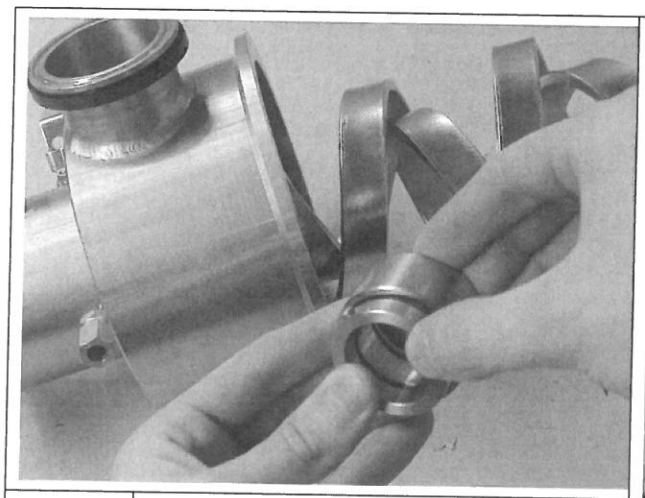

3	Check the seal is correctly assembled and place it on the shaft

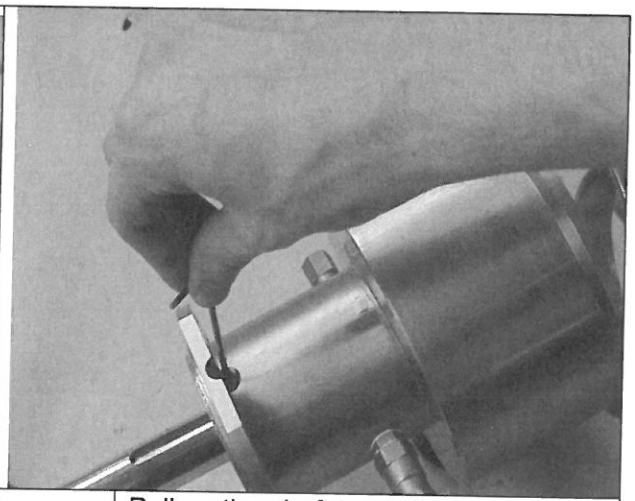

4	Pull on the shaft to compress the seal, check that the set screw is facing the shaft notch and tighten the seal onto the shaft. ATTENTION: there are two screws

REASSEMBLING THE TOP PART OF THE MIXER

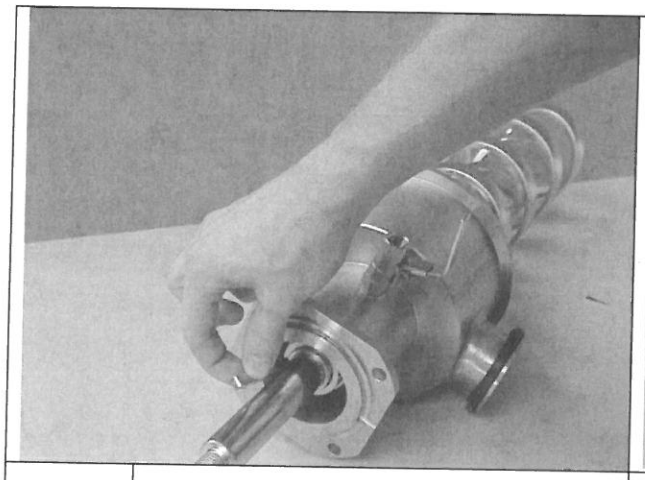

1	Grease the shaft and place the key in its housing

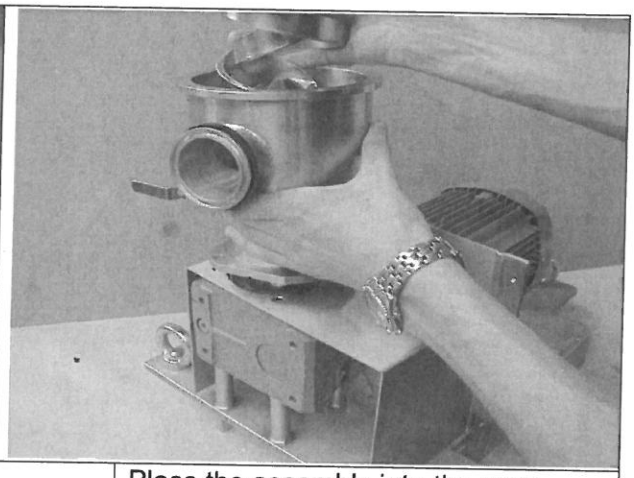

2	Place the assembly into the gear motor and tighten the four fixing screws

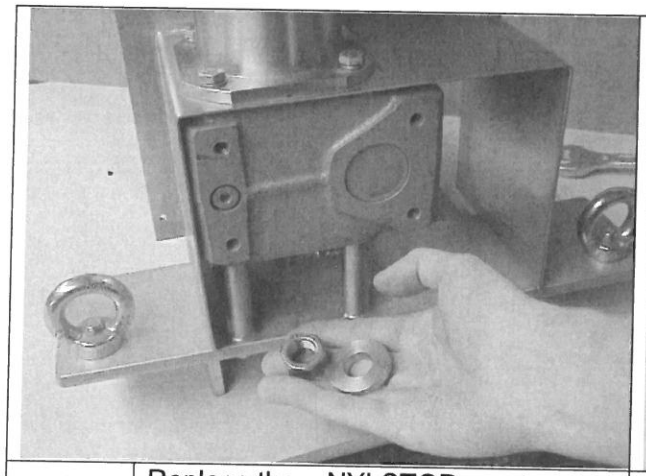

3	Replace the « NYLSTOP » nut and washer

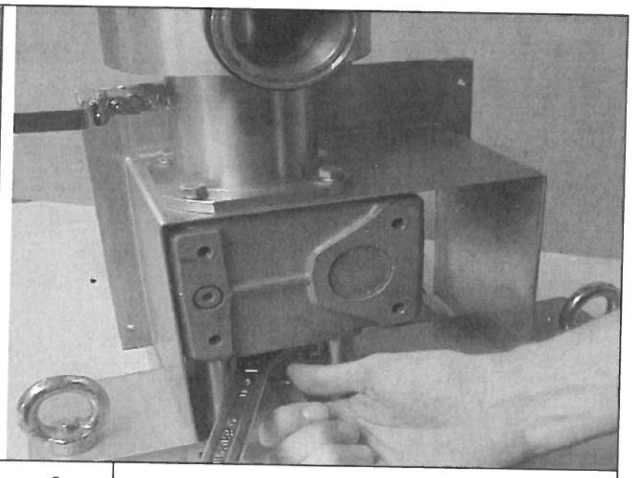

4	Ensure the assembly is fully tightened

ASSEMBLING THE CASING

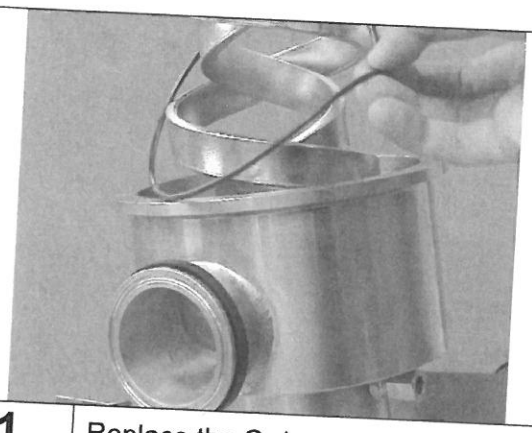

1	Replace the O-ring seal

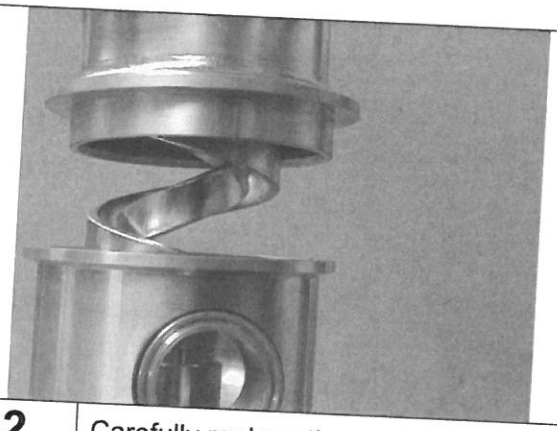

2	Carefully replace the casing

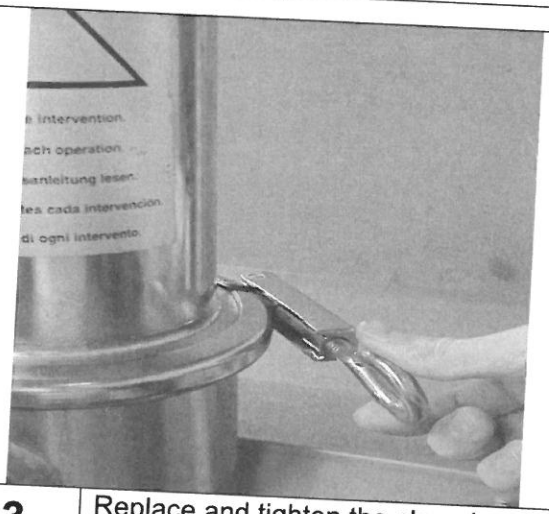

3	Replace and tighten the clamping ring

4.2.1 Troubleshooting

PROBLEM NOTED	SUGGESTED SOLUTION
Product is leaking into the hydraulic barrier	- Check that the helix shaft NYLSOP nut is sufficiently tight. - Check the condition of the seal on the product side.
Water is leaking through the vents	- Check that the helix shaft NYLSOP nut is sufficiently tight. - Check the condition of the outside facing of the seal.
Water is leaking into the product	- Check that the helix shaft NYLSOP nut is sufficiently tight. - Check the condition of the seal on the product side. - Check the hydraulic barrier pressure.
Product is leaking at the connection points	- Check the tightness of the connectors. - Check the condition of the seals.
Product is leaking at the casing connection points	- Check the tightness of the clamping ring. - Check the condition of the O-ring seal.
Motor thermal damage	- Check for any dampness in the motor terminal board. - Check the motor windings.
The mechanical seal is leaking in static mode	- Check the condition of the O-ring seals and the mechanical seal faces. - Reassemble the equipment, making sure you follow the instructions. - Check the geometry.
The mechanical seal leaks in dynamic mode from start up	Check the operating conditions. Review the material selection.
The mechanical seal becomes abnormally hot	Check the hydraulic barrier circuit and ensure there is product in the mixer.
The mechanical seal is making abnormal noises	Re establish the lubricating circuits.

5. APPENDICES

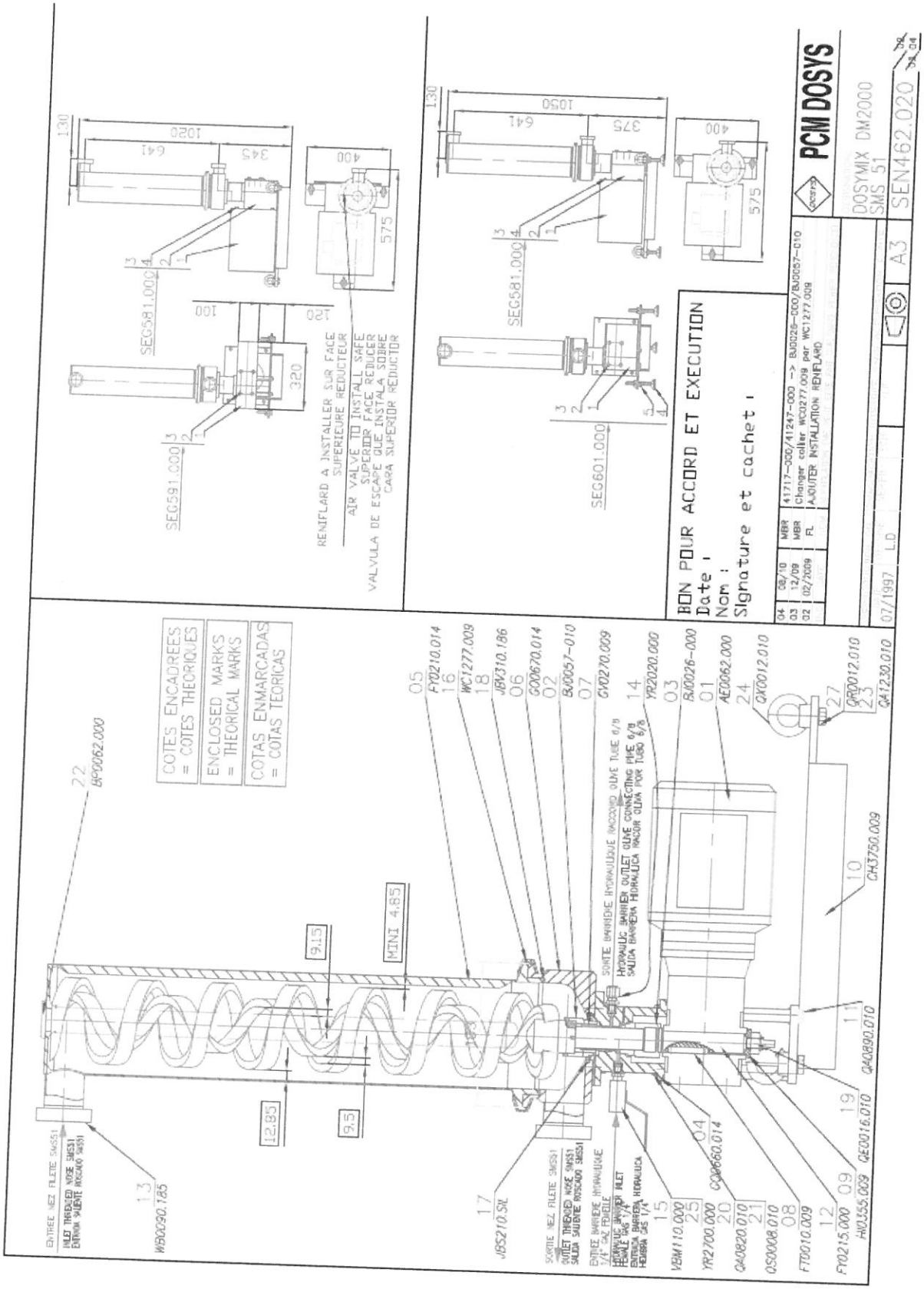

MOTOR REDUCTION UNIT TECHNICAL DATA SHEET (LEROY SOMER)

25

Multibloc 2000 fr - en

LUBRIFICATION

Pour fonctionnement entre -20 et +40°C, le réducteur Multibloc est livré, en standard, lubrifié avec une huile synthétique de type PAO (Poly-alpha-oléfine) ISO VG 460, (T° maxi de l'huile : 100°C en continu).

Nous préconisons un graissage de l'accouplement moteur à la graisse PAO + Argile NLGI 2 (Mobiltemp SHC 100).

Options

Facteur de service K≥1, fonctionnement entre :

- -30 et -10°C : huile synthétique ISO VG 150 (T° maxi de l'huile : 90°C en continu) ;
- -50 et -30°C : huile synthétique ISO VG 32 (T° maxi de l'huile : 40°C en continu).

Lubrification à la graisse extrême pression, grade NLGI 00 :

- fonctionnement entre -10 et +40°C, pour un facteur de service K>1,5 et réducteur peu chargé, la température de la graisse ne dépassant pas 70°C.

Entretien, vidange

- Nous conseillons une vidange de l'huile PAO ISO VG 460, selon la température de fonctionnement en continu :

70°C ---> 25 000 heures	90°C ---> 6 000 heures
80°C ---> 12 000 heures	100°C ---> 3 000 heures

Capacité en huile

Les quantités d'huile indiquées (voir le tableau page 5) doivent être respectées à ± 5% quelque soit la position de fonctionnement.

COMMANDE DE PIECES

Pour toute commande, indiquer s'il vous plaît :

- type du réducteur ;
- forme **NU** (00 ou 33), **NS** (S-00 ou 33), **BSL** (BS-50 ou 53...), **BDL** (BD-50 ou 53...) ;
- position de montage ;
- réduction exacte ;
- numéro de fabrication ;
- numéro, désignation de la pièce (pour l'arbre lent, préciser les dimensions) ;
- le type, la polarité, la puissance et la bride **FF** (B5) ou **FT** (B14) du moteur (voir plaques signalétiques).

LUBRICATION

For operation between -20 and +40°C, Multibloc reducer is delivered as standard, with synthetic oil type SHC (Synthetic-hydrocarbon) ISO VG 460, (T° oil maxi : 100°C).

We suggest a grease SHC + Clay NLGI 2 (Mobiltemp SHC 100) for the coupling of the motor.

Options

Service factor K≥1, for operation between :

- -30 and -10°C : synthetic oil ISO VG 150, (T° oil maxi : 90°C) ;
- -50 and -30°C : synthetic oil ISO VG 32, (T° oil maxi : 40°C).

Grease lubrication: extreme pressure type NLGI 00 :

- for operation between -10 and +40°C, for service factor K>1.5, gearbox low loaded and a grease temperature in operation less than 70°C.

Maintenance oil change (according to oil T°)

- Synthetic oil PAO ISO VG 460 : require change, according to the oil temperature for a continuous duty :

70°C ---> 25 000 hours	90°C ---> 6 000 hours
80°C ---> 12 000 hours	100°C ---> 3 000 hours

Oil capacities

Oil capacities must be within ± 5% : of the quantity indicated (refer to the chart p5) on any of the mounting position.

HOW TO ORDER

When ordering, please indicate :

- reducer type ;
- design **NU** (00 or 33), **NS** (S-00 or 33), **BSL** (BS- 50 or 53...), **BDL** (BD-50 or 53 ...) ;
- mounting position ;
- exact ratio ;
- serial number ;
- number and designation of spare part (for output shaft, please give dimensions) ;
- type, RPM, power and flange FT (B14) or FF (B5) of motor (refer to nameplates).

IMPORTANT !
Avant mise en service : monter le bouchon reniflard en partie haute à la place d'un bouchon de fermeture.

WARNING !
Before first running fit breather plug at the highest point in place of an oil retention plug.

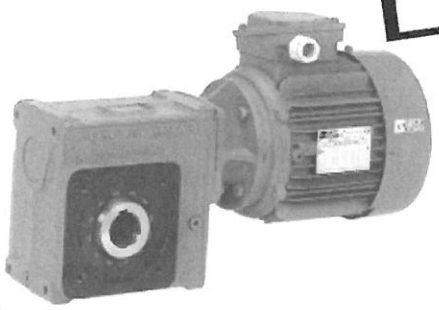

Malgré tout le soin apporté à la fabrication et au contrôle de ce matériel, Leroy-Somer ne peut garantir à vie l'absence de fuite de lubrifiant. Au cas où de légères fuites pourraient avoir des conséquences graves mettant en jeu la sécurité des biens et des personnes, il appartient à l'installateur et à l'utilisateur de prendre toutes les précautions nécessaires pour éviter des conséquences.
Les données sont susceptibles d'évolution sans avis préalable.

Despite all the care taken in the manufacturing and inspection processes of our products, Leroy-Somer cannot guarantee 100% against lubricant leakage. In cases where these leaks could be serious, putting at risk the safety and well being of people, it is the responsibility of the fitters to take all necessary precautions to avoid these eventualities occurring.
Data is subject to change without notice.

LEROY SOMER

Ref. 2910 - 4.33 / e - 1.03

Multibloc 2000

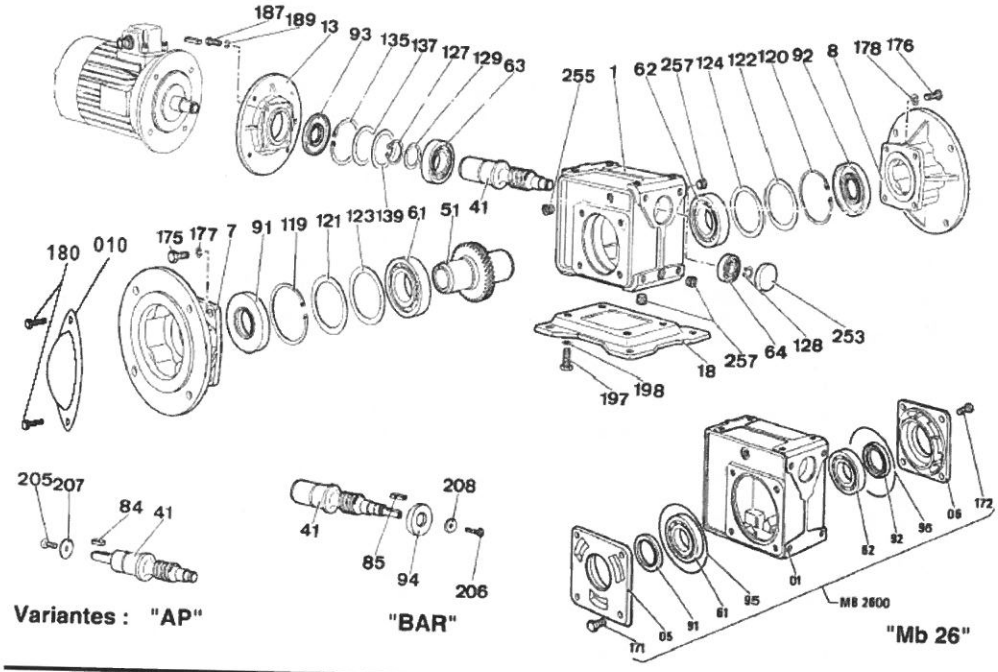

Variantes : "AP" "BAR" "Mb 26"

Nomenclature Multibloc

Rep.	Désignation	Qté	Rep.	Désignation	Qté	Rep.	Désignation	Qté
001	carter	1	092	joint droit	1	129	rondelle d'appui	1
05/6	palier pour Mb 26	2	093	joint en entrée	1	135	circlips I	1
010	capot protection arbre cr.*	1	95/96	joint torique (Mb 26)	2	137	rondelle	1
041	vis sans fin	1	119	circlips I gauche	1	139	cales de réglage	1jeu
051	roue en bronze	1	120	circlips I droit	1	171/2	vis fixation de005 / 6	8
061	roulement gauche	1	121	rondelle gauche	1	180	vis fixation capot (010)	2
062	roulement droit	1	122	rondelle droite	1	253	bouchon obturateur	1
063	roulement en entrée	1	123/4	cales de réglage	1	255	bouchon reniflard	1
064	roulement avant	1	127	circlips E	1	257	bouchon huile	4
091	joint gauche	1	128	circlips E				

* : taille 22 à 25

Nomenclature "AP"

Rep.	Désignation	Qté
041	vis AP	1
084	clavette AP	1
205	vis de bout d'arbre	1
207	rondelle de bout d'arbre	1

Nomenclature "BAR"

Rep.	Désignation	Qté
041	vis avec BAR	1
085	clavette BAR	1
094	joint	1
206	vis de bout d'arbre	1
208	rondelle de bout d'arbre	1

Multibloc part list

Rep.	Designation	Qty	Rep.	Designation	Qty	Rep.	Designation	Qty
001	housing	1	092	seal (right side)	1	129	ring	1
05/6	endshield	2	093	input seal	1	135	retaining ring	1
010	hollow output shaft cover*	1	95/96	"O" rign seal	2	137	spacer	1
041	worm	1	119	retaining ring (left side)	1	139	adjusting shims	1 set
051	wheel	1	120	retaining ring (right side)	1	171/2	screws for Mb 26	8
061	bearing (left side)	1	121	spacer (left side)	1	180	fixing bolt cover (010)	2
062	bearing (right side)	1	122	spacer (right side)	1	253	cap	1
063	worm input bearing	1	123/4	adjusting shims	1	255	breather plug	1
064	worm front bearing	1	127	retaining ring	1	257	oil plug	4
091	seal (left side)	1	128	retaining ring				

* : size 22 to 25

"AP" part list

Rep.	Designation	Qty
041	AP screw	1
084	key AP	1
205	end shaft screw	1
207	end shaft washer	1

"BAR" part list

Rep.	Designation	Qty
041	high speed shaft screw	1
085	key	1
094	seal	1
206	end shaft screw	1
208	end shaft washer	1

Pièces d'usure

1st maintenance parts

Taille Mb	standard			AP			standard	
Mb size	061-062	063	064	063	064	093	094 (BAR)	091-092
2601	6212	3211*	6305			AS 65x100x13	A 25x62x10	AS 65x85x13
2501	6018	3210*	6304 2RS	3210	6304 2RS	AS 50x90x8	A 20x52x7	AS 90x140x13
2401	6212	6209 2RS	6303 2RS	3209 2RS*	6303 2RS	AS 45x85x8	A 17x47x7	AS 60x110x13
2301	6012	6207 2RS	6203 2RS	3207 2RS*	6203 2RS	AS 35x72x7	A 17x40x7	AS 60x95x10
2201	6208	6206 2RS	6301 2RS	3206 2RS*	6301 2RS	AS 30x62x7	A 12x37x7	AS 40x80x10

*: sans encoche de remplissage.

*: without filling slot.

☎: +33 (0)1 41 08 15 15 : www.pcm.eu

Multibloc 2000

Kit socle à pattes

Rep.	Désignation	Qté
018	socle à pattes	1
197	vis de fixation	4
198	rondelles plates	4

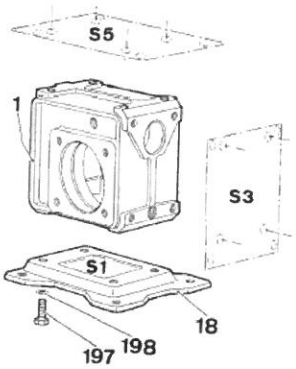

Foot mounting kit

Rep.	Designation	Qty
018	feet	1
197	bolt	4
198	washer	4

Kit bride d'entrée

Rep.	Désignation	Qté
013	bride pour moteur	1
187	vis de fixation	4
189	rondelle frein	4
209	vis de fixation moteur	4
210	rondelle	4

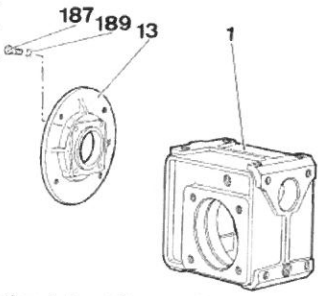

Gearbox input flange kit

Rep.	Designation	Qty
013	input gearbox flange for motor	1
187	bolt	4
189	stop washer	4
209	bolt for motor	4
210	washer	4

ATTENTION ! : Toutes les vis de fixation doivent être serrées jusqu'à 70% de leur limite élastique

ATTENTION ! : All the bolts must be screwed up to 70% of their elastic strenght

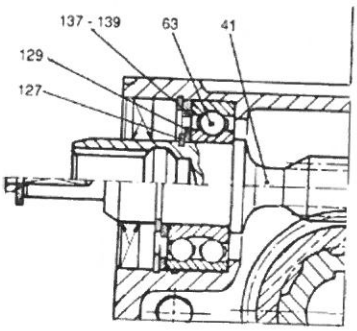

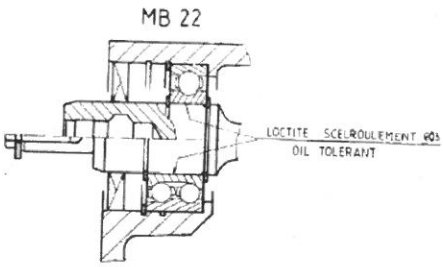

Nouveau montage (06/1996), type Mb 22, Mb 23 et Mb 24.

L'épaulement sur la vis sans fin rep.041 est remplacé par un deuxième circlips rep.127. Le roulement rep.063 est monté au "loctite scelroulement 603". Les rondelles d'appui rep.129 et 137 sont supprimées ainsi que les cales de réglage rep.139.

Dans le cas d'une nouvelle vis dans un ancien carter, le montage est possible en conservant la rondelle d'appui rep.137 ainsi que les cales de réglage rep.139.

New mounting (06/1996), type Mb 22, Mb 23 and Mb 24.

Shoulder on worm rep.041 is replaced with a second retaining ring rep.127. Bearing rep.063 is fitted on worm with "loctite scelroulement 603". Spacers rep.129 and rep.137 are not fitted any more as well as adjusting shims rep.139.

In case of new worm in a old housing, assembling is possible keeping spacer rep.137 and adjusting shims rep.139.

Multibloc 2000

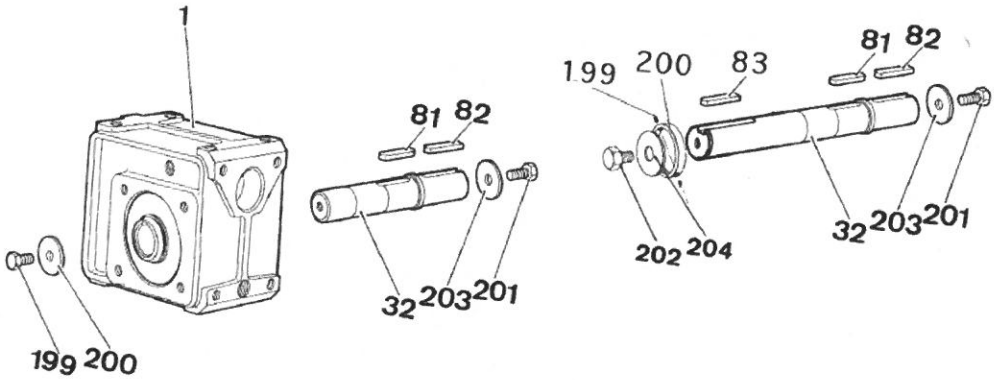

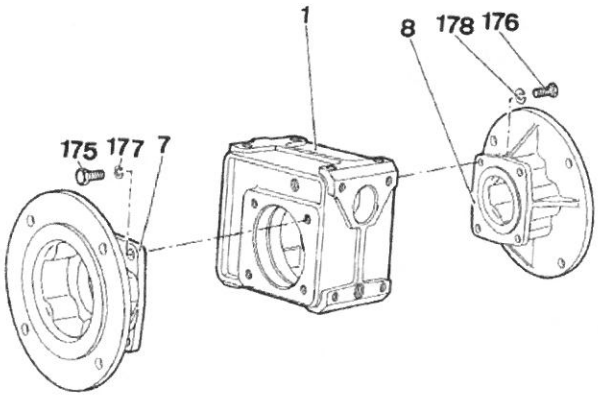

Kit arbre de sortie L (G) ou R (D)

Rep.	Désignation	Qté
032	arbre lent	1
081	clavette de moyeu	1
082	clavette client	1
199	vis de maintien de l'arbre	1
200	rondelle plate	1
201	vis de bout d'arbre	1
203	rondelle plate	1

Kit arbre de sortie LR (X)

Rep.	Désignation	Qté
032	arbre lent	1
081	clavette de moyeu	1
082-3	clavettes client	2
199	vis d'arrêt	2
200	bague d'arrêt	1
201-2	vis de bout d'arbre	2
203-4	rondelle plate	2

Kit bride de sortie (sauf Mb 26)

Rep.	Désignation	Qté
007	bride gauche	1
008	bride droite	1
175	vis de fixation	4
176	vis de fixation	4
177	rondelle frein	4
178	rondelle frein	4

Output shaft kit L (G) or R (D)

Rep.	Designation	Qty
032	output shaft	1
081	hollow shaft key	1
082	driven shaft key	1
199	bolt	1
200	washer	1
201	bolt	1
203	washer	1

Output shaft kit LR (X)

Rep.	Designation	Qty
032	output shaft	1
081	hollow shaft key	1
082-3	driven shaft key	1
199	bolt	2
200	ring	2
201-2	shaft end screw	1
203-4	washer	2

Output flange kit (except Mb 26)

Rep.	Designation	Qty
007	output flange (left side)	1
008	output flange (right side)	1
175	bolt	4
176	bolt	4
177	stop washer	4
178	stop washer	4

☎: +33 (0)1 41 08 15 15 : www.pcm.eu

Multibloc 2000

MONTAGE DU BRAS DE COUPLE

Le bras de couple (17) sera fixé sur le carter par les 4 trous de la face latérale choisie au moyen de vis (195) type CHc de classe 8.8 minimum (selon NFE 27-005).
Ces quatre vis doivent être freinées par un adhésif anaérobie (Loctite Freinfilet normal 243 par exemple) qui devra résister aux sollicitations vibratoires tout en permettant le démontage des vis si nécessaire.

Moment de serrage des vis de fixation

Le serrage se fera progressivement et simultanément sur les quatre vis (serrage en croix).

Kit bras de couple

Rep.	Désignation	Qté
17	bras de réaction	1
195	vis de fixation	4

TORQUE ARM MOUNTING

Screw the torque arm (17) on the fixing side by using four screws (195) CHc type (class 8.8 minimum according to NFE 27-005).
The screws must be stopped by an anaerobic adhesive (Loctite Freinfilet normal 243 for example). This adhesive must resist to vibrations and may allow dismounting of torque arm if necessary.

Braking torque of fixing screws

Tighten four screws simultaneously and progressively.

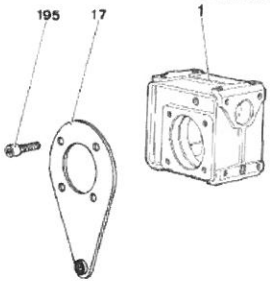

Torque arm kit

Rep.	Designation	Qty
17	torque arm	1
195	fixing bolt	4

Position bouchons suivant position réducteur

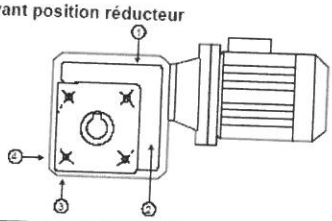

Position of plugs considering gearbox position

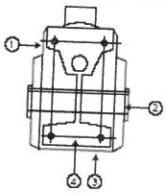

	B3 ou/or B5 (B)	B8 ou/or B53 (P)	V5 ou/or V1 (H)	V6 ou/or V3 (T)	B7 ou/or B54 (V)	B6 ou/or B52 (W)	
Remplissage ▽	1	3 ou/or 4	2	1	2	4 ou/or 3	Filling ▽
Event △	1	3	2	1	2	4	Breather △
Vidange ▼	3	1	1	2	4	2	Draining ▼

Mb	22 à/to 25	26	
Bouchon avec joint	3 x G 1/8"	3 x G 3/8"	Plug with seal
Bouchon d'évent à soupape	1 x G 1/8"	1 x G 3/8"	Breather plug with valve

Lubrification — **Lubrication table**

Volume d'huile / Quantity of oil	Taille Mb - Mb size 2601	2501	2401	2301	2201	Vitesse d'entrée / Input speed
litres ± 5%	2,2	1	0,63	0,3	0,21	n > 500 min⁻¹
litres ± 5%	2,8	1,3	0,63	0,3	0,21	n < 500 min⁻¹

Tableau des lubrifiants — **Table of lubricants**

Marques / Trade mark	HUILES Poly-alpha-oléfine / OIL Synthetic-hydrocarbon ISO VG 460	220	32	460 - H1[1]
KLUBER				KLUBEROIL 4 UH1 - 460
MOBIL	SHC 634 (-42°C)	SHC 629 (-45°C)	SHC 624 (-54°C)	

[1]: Agro-alimentaire

: lubrifiants qualifiés Leroy-Somer

[1]: Food processing applications

: lubricant qualified by Leroy-Somer

LEROY SOMER

5

Multibloc 2000

HAUTEUR D'AXE : 71 à 132
FRAME SIZE : 71 to 132

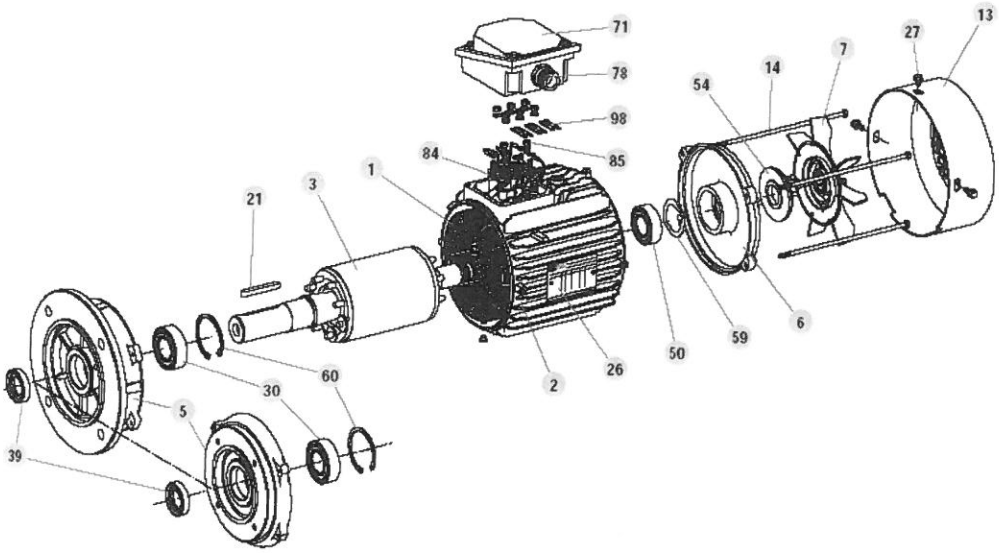

Rep. N°	Désignation Description	Qté Qty
1	Stator bobiné / *Wound stator*	1
2	Carter / *Housing*	1
3	Rotor / *Rotor*	1
5	Flasque côté accouplement / *Drive end shield*	1
6	Flasque arrière / *Non-drive end*	1
7	Ventilateur / *Fan*	1
13	Capot de ventilation / *Fan cover*	1
14	Tiges de montage / *Tie rods*	4
21	Clavette de bout d'arbre / *Shaft extension key*	1
26	Plaque signalétique / *Identification plate*	1
27	Vis de fixation du capot / *Fan cover screw*	4

Rep. N°	Désignation Description	Qté Qty
30	Roulement côté accouplement / *Drive end bearing*	1
39	Joint côté accouplement / *Drive end bearing*	1
50	Roulement arrière / *Non-drive end bearing*	1
59	Rondelle de précharge / *Preloading (Wavy) washer*	1
60	Segment d'arrêt (circlips) / *Circlip*	1
71	Boîte à bornes / *Terminal box*	1
78	Presse-étoupe / *Cable gland*	1-2
84	Planchette à bornes / *Terminal block*	1
85	Vis de planchette / *Set screw*	2
98	Barettes de connexions / *Connecting bars*	3

PCM

LEROY SOMER®

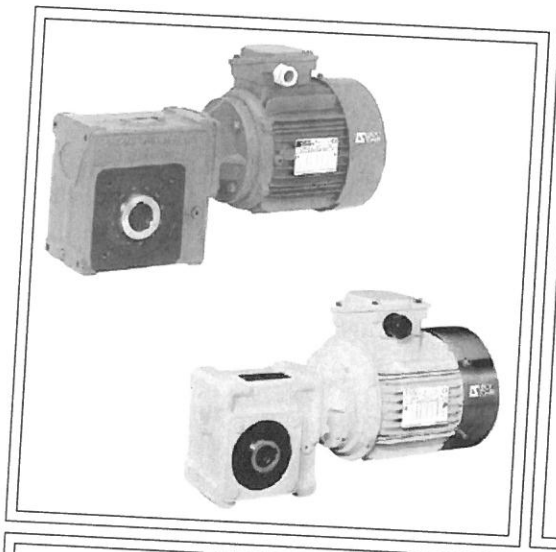

2910 - 12.2006 / h

25

en

This manual is to be given to the end user

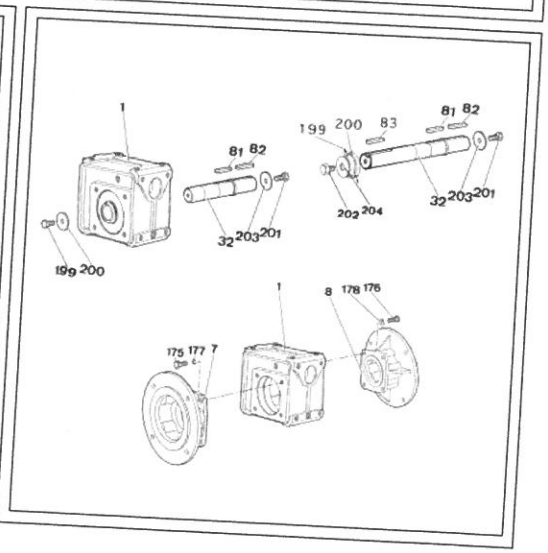

Mb 3101, Mb 2000, Mb IA

Geared motors

Installation and maintenance

☎: +33 (0)1 41 08 15 15 : www.pcm.eu

LEROY-SOMER	INSTALLATION AND MAINTENANCE	2910 - 12.2006 / h

Mb 3101, Mb 2000, Mb IA

Geared motors

NOTE - CAUTION - CONTENTS

NOTE

LEROY-SOMER reserves the right to modify the characteristics of its products at any time in order to incorporate the latest technological developments. The information contained in this document may therefore be changed without notice.
LEROY-SOMER gives no contractual guarantee whatsoever concerning the information published in this document and cannot be held responsible for any errors it may contain, nor for any damage resulting from its use.

CAUTION

Throughout the manual, this symbol warns of consequences which may arise from inappropriate use of the Multibloc geared motor, since the risks may lead to material or physical damage.

Despite all the care taken in the manufacturing and inspection processes of our products, Leroy-Somer cannot guarantee 100% against lubricant leakage. In cases where these leaks could be serious, putting at risk the safety of people and property, it is the responsibility of the fitters to take all necessary precautions to avoid these eventualities occurring.

IMPORTANT!

Before commissioning: fit the breather plug at the highest point in place of an oil retention plug.

CONTENTS

☎: +33 (0)1 41 08 15 15 : www.pcm.eu

LEROY-SOMER	INSTALLATION AND MAINTENANCE	2910 - 12.2006 / h

Mb 3101, Mb 2000, Mb IA
Geared motors
EXPLODED VIEWS, PARTS LISTS

3 - EXPLODED VIEWS, PARTS LISTS

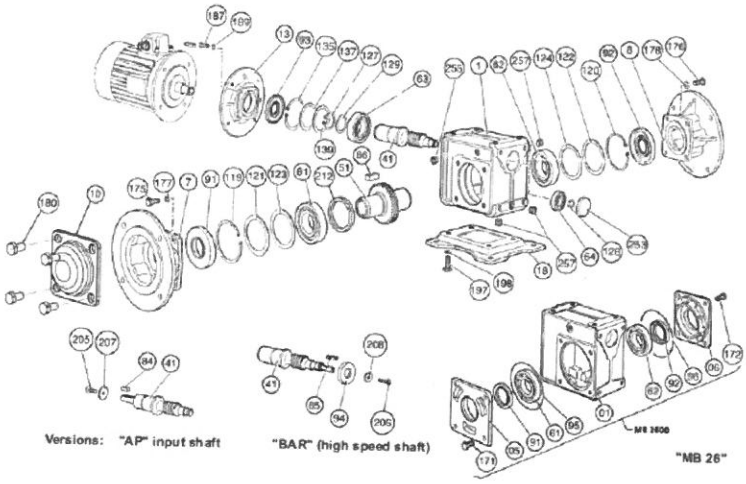

Multibloc 3101, 22 to 26 parts list

Ref.	Description	Qty
001	frame	1
005/006	end shield for Mb 26	2
010	hollow shaft protective cover	1
041	worm	1
051	bronze wheel	1
061	bearing (left side)	1
062	bearing (right side)	1
063	input bearing	1
064	DE bearing	1
086	key (Mb 31)	1
091	seal (left side)	1

Ref.	Description	Qty
092	seal (right side)	1
093	input seal	1
095/096	O ring seal (Mb 26)	2
119	I circlip (left side)	1
120	I circlip (right side) (Mb 22 to	1
121	washer (left side) (Mb 22 to 26)	1
122	washer (right side) (Mb 22 to	1
123/124	adjusting shims (Mb 22 to 26)	1
127	E circlip (Mb 22 to 24)	1 or 2
128	E circlip (Mb 22 to 26)	1 or 2
129	cable gland washer (Mb 25-26)	1

Ref.	Description	Qty
135	I circlip	1
137	washer (Mb 25-26)	1
139	adjusting shims (Mb 25-26)	1 set
171/172	screws for 005/006 (Mb 25-26)	8
180	cover fixing screw (010)	4
212	spacer (Mb 31)	1
253	blanking plug	1
255	breather plug	1
257	oil plug	2 to 4

Mb 22 to 26 "AP" parts list

Ref.	Description	Qty
041	AP screw	1
084	AP key	1
205	shaft extension screw	1
207	shaft extension washer	1

Mb 22 to 26 "BAR" parts list

Ref.	Description	Qty
041	high speed shaft screw	1
085	high speed shaft key	1
094	seal	1
206	shaft extension screw	1
208	shaft extension washer	1

3.1 - Output flange kit for Mb 3101, Mb 22 to 25

Ref.	Description	Qty
007	flange (left side)	1
175	fixing screws	4
177	lock washer	4
008	flange (right side)	1
176	fixing screws	4
178	lock washer	4

3.2 - Input flange kit for Mb 22 to 26

Ref.	Description	Qty
013	flange for motor	1
187	fixing screws	4
189	lock washer	4
209	motor fixing screws	4
210	washer	4

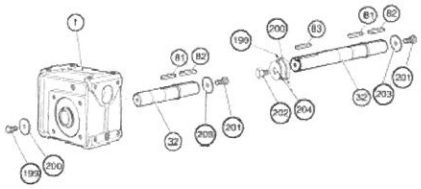

3.3 - Shaft kits for Mb 3101, Mb 22 to 26

Output shaft kit L (G) or R (D)

Ref.	Description	Qty
032	slow speed shaft	1
081	hub key	1
082	client key	1
199	shaft retaining screw	1
200	washer	1
201	shaft extension screw	1
203	washer	1

Output shaft kit LR (X)

Ref.	Description	Qty
032	slow speed shaft	1
081	hub key	1
082-3	keys	2
199	stop screw	2
200	locking collar	1
201-2	shaft extension screw	2
203-4	washer	2

3.4 - Torque arm kit for Mb 31, Mb 22 to 25

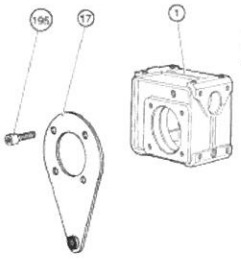

Ref.	Description	Qty
017	torque arm	1
195	fixing screws	4

MOUNTING THE TORQUE ARM

The torque arm (17) should be fixed onto the frame using the 4 holes on the chosen side with cheese head screws (195) class 8.8 minimum (according to NFE 27-005).
These four screws should be locked with an anaerobic adhesive (Loctite 243 Removable Threadlocker for example) which should resist vibrations but still allow the screws to be removed if necessary.

Tightening torque of fixing screws

All four screws should be tightened gradually and simultaneously.

3.5 - Foot mounting kit for Mb 22 to 26

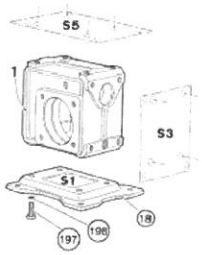

Ref.	Description	Qty
018	foot plate	1
197	fixing screws	4
198	washers	4

All the fixing screws must be tightened up to 70% of their yield strength.

en

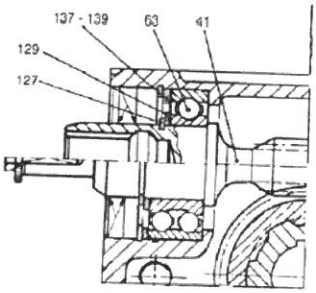

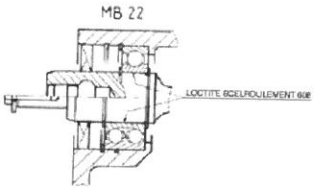

Mounting (06/1996), type Mb 22, Mb 23 and Mb 24.

The shoulder on the worm ref. 041 is replaced by a second circlip ref. 127. The bearing ref. 063 is fitted with Loctite 603 retaining compound. The cable gland washers ref. 129 and 137 are not used, nor are the adjusting shims ref. 139.
If a new worm is being fitted in an old frame, the cable gland washer ref. 137 and adjusting shims ref. 139 should still be used for mounting.

3.6 - Primary maintenance parts

Mb size	standard			AP		standard		
	061-062	063	064	063	064	093	094 (BAR)	091-092
2601	6213	3211*	6305	-	-	AS 55x100x13	A 25x62x10	AS 65x95x13
2501	6018	3210*	6304 2RS	3210	6304 2RS	AS 50x90x8	A 20x52x7	AS 90x140x13
2401	6212	6209 2RS	6303 2RS	3209 2RS*	6303 2RS	AS 45x85x8	A 17x47x7	AS 60x110x13
2301	6012	6207 2RS	6203 2RS	3207 2RS*	6203 2RS	AS 35x72x7	A 17x40x7	AS 60x95x10
2201	6208	6206 2RS	6301 2RS	3206 2RS*	6301 2RS	AS 30x62x7	A 12x37x7	AS 40x80x10
3101	-	-	-	-	-	-	-	-

*Without filling slot.

Mb 3101, Mb 2000, Mb IA
Geared motors
EXPLODED VIEWS, PARTS LISTS

3.7 - LS motor: frame size 71 to 132

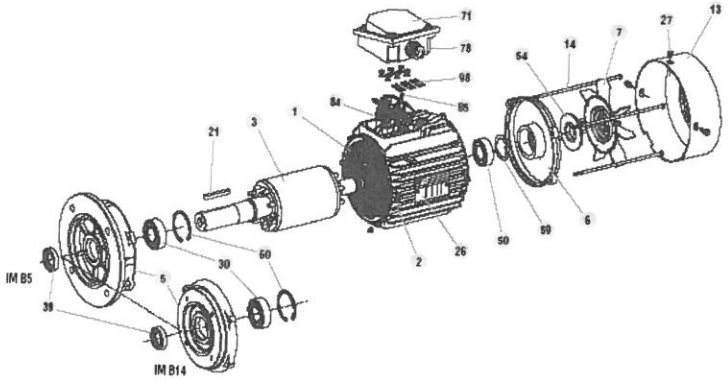

Ref.	Description	Qty	Ref.	Description	Qty	Ref.	Description	Qty
001	Wound stator	1	021	Shaft extension key	1	060	Circlip	1
002	Frame	1	026	Nameplate	1	071	Terminal box	1
003	Rotor	1	027	Fan cover screw	4	078	Cable gland	1
005	DE shield	1	030	Drive end bearing	1	084	Terminal block	1
006	NDE shield	1	039	Drive end seal	1	085	Set screw	1
007	Fan	1	050	Non drive end bearing	1	098	Connectors	1
013	Fan cover	1	054	Non drive end seal	1			1
014	Tie rods	4	059	Preloading (wavy) washer	1			1

3.8 - Non-ventilated FLS motor: frame size 80 to 132

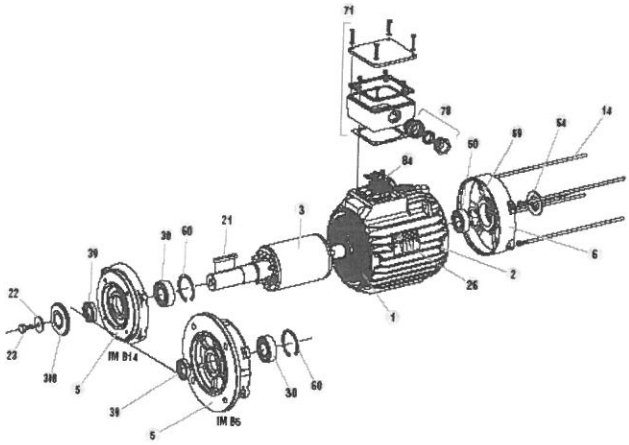

Ref.	Description	Qty	Ref.	Description	Qty	Ref.	Description	Qty
001	Wound stator	1	022	Shaft extension washer	1	059	Preloading (wavy) washer	1
002	Frame	1	023	Shaft extension screw	1	060	Circlip	1
003	Rotor	1	026	Nameplate	1	071	Terminal box	1
005	Drive end shield (DE)	1	030	Drive end bearing	1	078	Cable gland	1
006	Non-drive end shield (NDE)	1	039	Drive end seal	1	084	Terminal block	1
014	Tie rods	4	050	Non drive end bearing	1	308	Labyrinth seal	1
021	Shaft extension key	1	054	Non drive end seal	1			

Note: The above illustration of parts does not necessarily show details, forms and volumes accurately.

Mb 3101, Mb 2000, Mb IA
Geared motors
Mb IA

4 - Mb IA

For applications in the food processing industry, we supply gearboxes conforming to the machinery directive 89/392/EEC and complying with the requirements of the USDA (United States Department of Agriculture) with the PAO H1 option: lubricant which can come into accidental contact with food. They are painted in white RAL 9010 epoxy and wrapped in specially-designed packaging to withstand normal transport and storage conditions. Avoid any abrupt movements.

Identification:
1 - gearbox type: **Mb IA 2401**
2 - operating position: **B5 (B)**
3 - mounting form: **NU**(00), **H** (C) hollow output shaft
4 - exact reduction: **40**
5 - manufacturing number: **303257020/001**
6 - lubricant

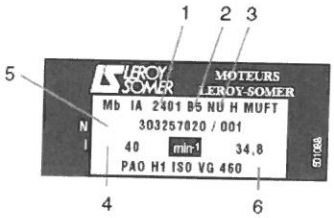

en

4.1 - Exploded view of Mb IA 31, Mb IA 22 to Mb IA 25

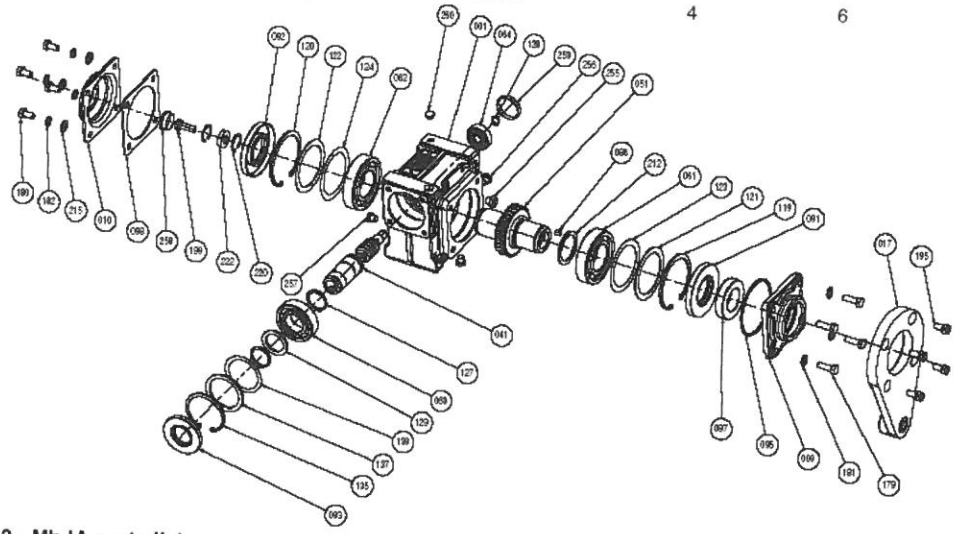

4.2 - Mb IA parts list

Ref.	Description	Qty	Ref.	Description	Qty	Ref.	Description	Qty	Ref.	Description	Qty
001	frame	1	064	DE bearing	1	121	washer (left side) (Mb IA 22 to 25)	1	137	washer (Mb IA 25)	1
010	hollow shaft protective cover	1	096	key (Mb IA 31)	1	122	washer (right side) (Mb IA 22 to 25)	1	139	adjusting shims (Mb IA 25)	1 set
041	worm	1	061	seal (left side)	1	123/124	adjusting shims (Mb IA 22 to 25)	8/8	180	st. steel cover fixing screw	4
051	bronze wheel	1	062	seal (right side)	1	127	E circlip (Mb IA 22 to 24)	1 or 2	212	spacer (Mb IA 31)	1
061	bearing (left side)	1	093	input seal	1	128	E circlip (Mb IA 22 to 25)	1 or 2	253	blanking plug	1
062	bearing (right side)	1	119	I circlip (left side)	1	129	cable gland washer (Mb IA 25)	1	255	breather plug	1
063	input bearing	1	120	I circlip (right side) (Mb IA 22 to 25)	1	135	I circlip	1	256/257	oil plug	3

4.3 - Torque arm kit

Ref.	Description	Qty
017	torque arm	1
195	st. steel fixing screws	4

4.4 - Torque arm kit with sealing cartridge
Mb IA 31, Mb IA 22 to Mb IA 25

Ref.	Description	Qty
009	seal retainer	1
017	torque arm	1
095	O ring seal	1
097	cartridge seal	1
195	st. steel fixing screw	4

Mounting the torque arm: see section 3.4

4.5 - Sealing cartridge kit

Ref.	Description	Qty
009	seal retainer	1
095	O ring seal	1
097	cartridge seal	1
179	st. steel fixing screw	1
181	st. steel washer	4

4.6 - Hollow shaft protection kit

Ref.	Description	Qty
010	hollow shaft protective cover	1
098	seal	1
180	st. steel cover fixing screw (010)	4
182	st. steel washers	4
199	st. steel screw	1
215	washer	4
220	circlip	2
222	washer	1
258	protective cap	1
999	tub of grease	1

Mounting the hollow shaft protection:
Place the seal (ref. 098) on the protective cover (ref. 010) and fix them on the frame using the 4 holes on the chosen side with the screws (ref. 180), not forgetting the washers (ref. 182), to avoid scratching the paint.

4.7 - Mounting the cylindrical hollow shaft, with the shaft of the driven machine

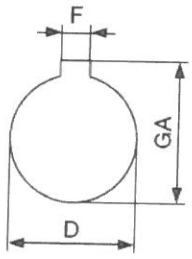

Type	Hollow output shaft			Client shaft						
	Ø DH7	F	GA	Ø Dg6	Length L		Ref. 097[1]		Thread	
					Min.	Max.	ØJC	L1	O	Z
Mb 2601	50	14	53.8	50	-	-	-	-	-	-
Mb 2501	45	14	48.8	45	130	132	56 h8	25	M16	36
Mb 2401	35	10	38.3	35	105	109	45 h8	25	M12	28
Mb 2301	30	8	33.3	30	90	93	35 h8	21	M10	22
Mb 2201	25	8	28.3	25	85	90	35 h8	20	M10	22
Mb 3101	20	6	22.8	20	70	72	25 h8	17	M6	16

1. Cartridge seal Ø (ref. 097).

1 - Check that the cylindrical shaft has been machined in accordance with standard NF - E 22 - 175, with a slide fit: g6, (the hub is: H7).
2 - Check that the key is standard and the shaft is the minimum length L (see above table) tapped at the end (O.Z).
3 - Before mounting, degrease all the parts, taking care not to splash any solvent on the seals.
Use the supplied jar of grease (PAO compound) (ref. 999) to lubricate any parts in contact, to avoid corrosion.

Mounting:

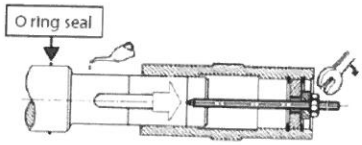

Mounting should be performed as described in the procedure above, without jolting.
The Mb IA gearbox is mounted on the machine shaft using a threaded rod, screwed into the shaft.
By screwing the nut down onto the washer (ref. 222), the shaft is smoothly inserted into the cylindrical hub of the Mb IA.
Tighten with the screw (ref. 199).

Dismantling:

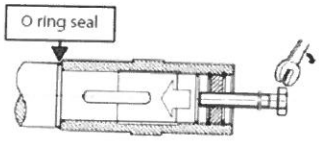

Use a spanner with a diameter corresponding to the washer thread (ref. 222) and turn the screw until the shaft comes out.

Fixing on a shouldered shaft:

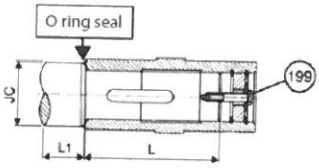

Fixing on an untapped shaft:

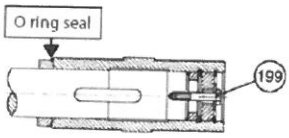

BH1
BH2

FOLIO	DESIGNATION
03	POLARITY
04	POLARITY
05	INVERTER PUMP 1
06	SOCKET X12 INVERTER PUMP 1
07	SOCKET X22 INVERTER PUMP 1
08	CONTROL
09	SECURITY CHAIN
10	PLC
11	FLOWCONTROLER
12	INPUTS E0.0 to E0.7
13	INPUTS E1.0 to E1.7
14	INPUTS E2.0 to E2.7
15	INPUTS E3.0 to E3.7
16	OUTPUTS A4.0 to A4.7
17	OUTPUTS A5.0 to A5.7
18	OUTPUTS A6.0 to A6.7
19	OUTPUTS A7.0 to A7.7
20	INPUTS E8.0 to E8.7
21	INPUTS E9.0 to E9.7
22	OUTPUTS A8.0 to A8.7
23	OUTPUTS A9.0 to A9.7
24	CUSTOMER EXCHANGES
25	FRAME CABINET
26	CABINET PANEL
27	NEUMATICAL BOX FRAME
28	NEUMATIC BOX PANEL
29	NEUMATIC
30	NEUMATIC
31	Terminal : X0 X0 - 1/1
32	Terminal : X1 X1 - 1/1
33	Terminal : X10 X10 - 1/1
34	Terminal : XD XD - 1/1
35	Terminal : XE XE - 1/1
36	Terminal : XM XM - 1/1
37	Terminal : XR XR - 1/1

PCM Keep it moving

DOSYS

TETRA PAK HELLAS

INDICE	LIBELLE	DESSINATEUR	VERIFICATEUR	DATE

N° D'AFFAIRE:		CH070-00	
N° DE NOMENCLATURE:		SEA9C9.000	
1	CREATION	RF	31/08/2007
2	VERIFICATION	VF	03/09/2007
ARM	DATE D'EDITION		19/11/2007

CE DOSSIER A ETE REALISE AVEC LE LOGICIEL SEE WORLDWIDE d'IGE+XAO

PCM
10 RUE MEGE MOURIES
ZA DU BEL AIR
BP 101
78513 RAMBOUILLET CEDEX
TEL: 01 30 46 50 00
FAX: 01 34 94 92 83

NBRE TOTAL DE FOLIOS	FOLIO
40	01

CD057-00

TETRA PAK HELLAS

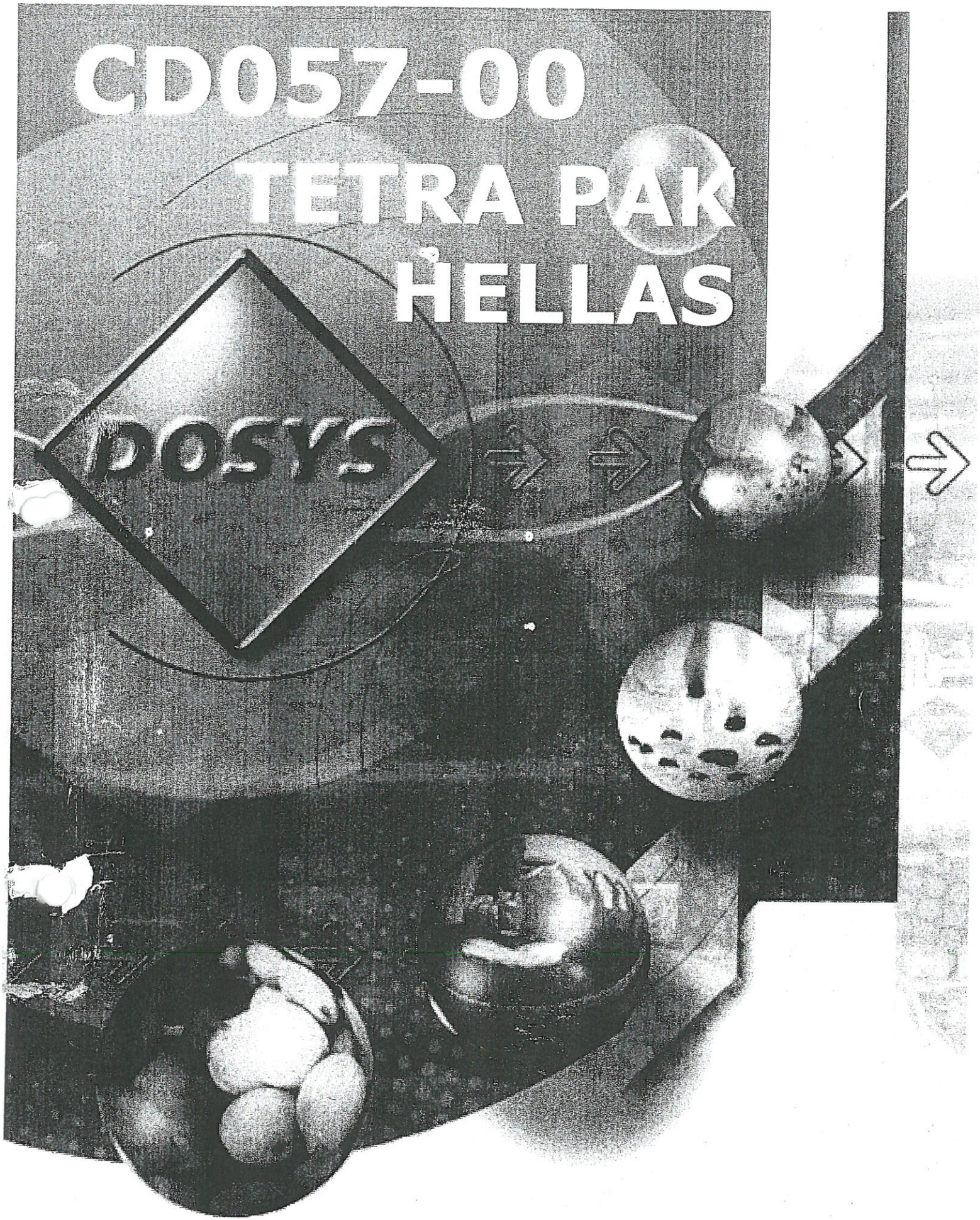

TECHNICAL MANUAL

DOSYS

Des pompes au process

DESIGN AND ASSEMBLY
PCM DOSYS
10, rue Mege Mouries
ZA Bel Air
78 513 RAMBOUILLET CEDEX
France
Tel : 33 01 30 46 50 00
Fax : 33 01 34 94 92 83

Project implementation manager :	Patrick VARET Serge COUSTENOBLE
Project manager :	David BASTIERE
Automation :	Victor FERREIRA Jean Pierre GAROFALO
After sells departement :	Jérôme HEURTEVIN Aurélien HESPEL Fabien GUILLOT Philippe CORFDIR

Matériel : DOSYFRUIT + DM4000 + DM2000

Date : 23/12/03

TECHNICAL CHARACTERISTICS - FRUITS STATION CD057-00 TETRA PAK HELLAS	
DOSING UNIT	
Type :	D.A.C.C 63/100-23
Quantity :	1
Capacity :	12,5 to 311.7 cc
Operating temperature range :	90° C Max in production
	140° C Max for 5 min. in static mode
Rate :	30 cycles/min.
Suction coupling :	SMS Male part1"
Discharge coupling :	SMS Male part 1"
ELECTRICITY	
Power supply voltage :	400 V Triphase + Neutral
Frequency :	50-60 Hz
Power :	8 kW with DM control or 5kW without DM control
Connection :	Terminals 1, 2 and 3 of X0 terminal block
COMPRESSED AIR	
Pressure :	6 bar
Consumption :	4 Nm3/h at 6 bar and 30 cycles/min.
Coupling :	3/8 inch gas female
Quality :	Dry, non-lubricated.
HYDRAULIC BARRIERS	
Coupling :	SMS Male part 1"
IN PRODUCTION :	
Fluid :	Main water
Quality :	Food (see DOSYS)
Flow rate :	10 l/h necessary
Pressure :	System-2 bar max
DURING CLEANING :	
Fluid :	C.I.P. Solutions
Flow rate :	Given by the CIP station
Pressure :	Given by the CIP station
Operating temperature range :	90° C Max in production
	140° C Max during 5 min. in static mode
CLEANING IN PLACE (C.I.P.)	
Pressure :	From 2 to 3 bar
Flow rate :	10 m3/h
Coupling :	SMS Male part 2"
Product :	Soda 80°C 2% / Acid 75°C 1.5%
STEAM STERILISATION	
Coupling :	SMS Part 1"
Fluid :	Steam 140°C / 5mn or 120°C / 20 mn
Pressure :	4 bar at 140°C or 2 bar at 120°C
FRAME	
Quality :	AISI 314 brushed finishing
Material :	Stainless steel square tube
Fixation :	4 fixed feets, adjustable for height (up to 50 mm)
ELECTRICAL CONTROL PANEL	
Water proof :	IP 55
Quality :	AISI 304L
Instruction onto control panel :	GREEK
PLC :	SIEMENS S7-300 + ETHERNET
Control Panel :	SIEMENS TP170
PNEUMATICAL PANEL	
Regulator filter :	FESTO
Pneumatic distributor :	FESTO

DOSYS

Des pompes au process

Declaration of conformity with "machine" directive

(Directive 89/392/CEE modified)
and with regulations instituted for its transposition

THE MANUFACTURER:

PCM DOSYS
10 *rue* Mège Mouries
ZA du bel Air
BP 101
78513 RAMBOUILLET CEDEX
Tél (33) 01 30 46 50 00
Fax (33) 01 34 94 92 83

DECLARES THAT THE MACHINE INDICATED BELOW:

DOSYFRUIT + DM4000 + DM2000
No. CD057-00

IS IN CONFORMITY WITH THE PROVISIONS OF THE AMENDED "MACHINE" DIRECTIVE
(DIRECTIVE 89/392/CEE) AND WITH THE NATIONAL LEGISLATIONS TRANSPOSING IT.

RAMBOUILLET, date 23/12/03

Stéphane BIANCO
Deputy Manager
P.O. P. VARET

DOSYS

Des pompes au process

DECLARATION OF INCORPORATION

THE MANUFACTURER: PCM DOSYS
10 rue Mège Mouries
ZA du bel Air
BP 101
78513 RAMBOUILLET CEDEX
Tél (33) 01 30 46 50 00
Fax (33) 01 34 94 92 83

DECLARES THAT THE MACHINE DESIGNATED BELOW:

- DOSYFRUIT + DM4000 + DM2000

No. CD057-00

WAS BUILT ACCORDING TO THE PROVISIONS OF DIRECTIVE 89/392/CEE AND THE NATIONAL TRANSPOSITION PROVISIONS WITHOUT ATTAINING THE OBJECTIVES OF
THIS DIRECTIVE ON THE FOLLOWING ELEMENTS:

MIXER INLET AND OUTLET ORIFICE

AS IT IS NOT MASTER OF THE ENVIRONMENT CLOSE TO THE MIXER OUTLET AND INLET
RIFICES, PCM DOSYS CANNOT ENSURE THE SAFETY OF OPERATING PERSONNEL AT
THE LEVEL OF THESE PARTS.

THEREFORE, IT IS PROHIBITED TO PUT THESE MACHINE PARTS INTO SERVICE UNTIL
THE MACHINES ON WHICH THEY ARE TO BE INCORPORATED HAVE BEEN DECLARED TO
BE IN CONFORMITY WITH THE PROVISIONS OF DIRECTIVE 89/392, AMENDED, OF JUNE 14,
1989 OR THE NATIONAL PROVISIONS TRANSPOSING IT.

At RAMBOUILLET, date 23/12/03

Stéphane BIANCO
Directeur Général Délégué
P.O. AVARET

INSTALLATION

Assembly of machine:

- Level the machine before connecting the utilities (water, electricity, air)
- Provide an access area for control and maintenance of the machine:
- Check that the various component parts are properly attached.

Connection of utilities:

- Before electric, pneumatic and hydraulic connection, check the specific characteristics of the machine (electric voltage, power, air consumption, flow of utilities (water, cleaning solutions, etc.)).
- The various pipes are marked according to the type of product they convey and the connection direction.

NOTE: You will obtain specific information about connection of this machine in the Chapter entitled TECHNICAL CHARACTERISTICS of this file.

WARNING

This machine has parts that can be dangerous under some conditions:

DOSING UNIT:

- When the pipes are connected there are no moving parts outside the dosing unit.
- On the other hand, whenever the suction or discharge pipes are removed, it is extremely dangerous to insert your fingers into the valve which is designed to establish a clear-cut break during rotation. This danger is indicated by notices affixed to the machine.

PIPING:

- During the CIP or STERILIZATION phases, the temperature of the entire machine will rise. Therefore, it is indispensable to take all necessary precautions (gloves, overalls, boots) to prevent any risk of thermal or chemical burns caused by the spraying of cleaning solutions during work on the machine.

☞IT IS ESSENTIAL TO APPLY THE EMERGENCY STOP, CUT OFF ALL THE ENERGY SOURCES (ELECTRICITY AND COMPRESSED AIR) AND SHUT DOWN THE MACHINE BEFORE MAINTENANCE ON THIS PART

NB: IT SHOULD BE NOTED THAT THE INSERTION OF ANY HARD OBJECTS INTO THE INSTALLATION CAN CAUSE EXTENSIVE DAMAGE TO THE EQUIPMENT IN GENERAL.

DOSYS

Des pompes au process

HYDRAULIC DIAGRAM

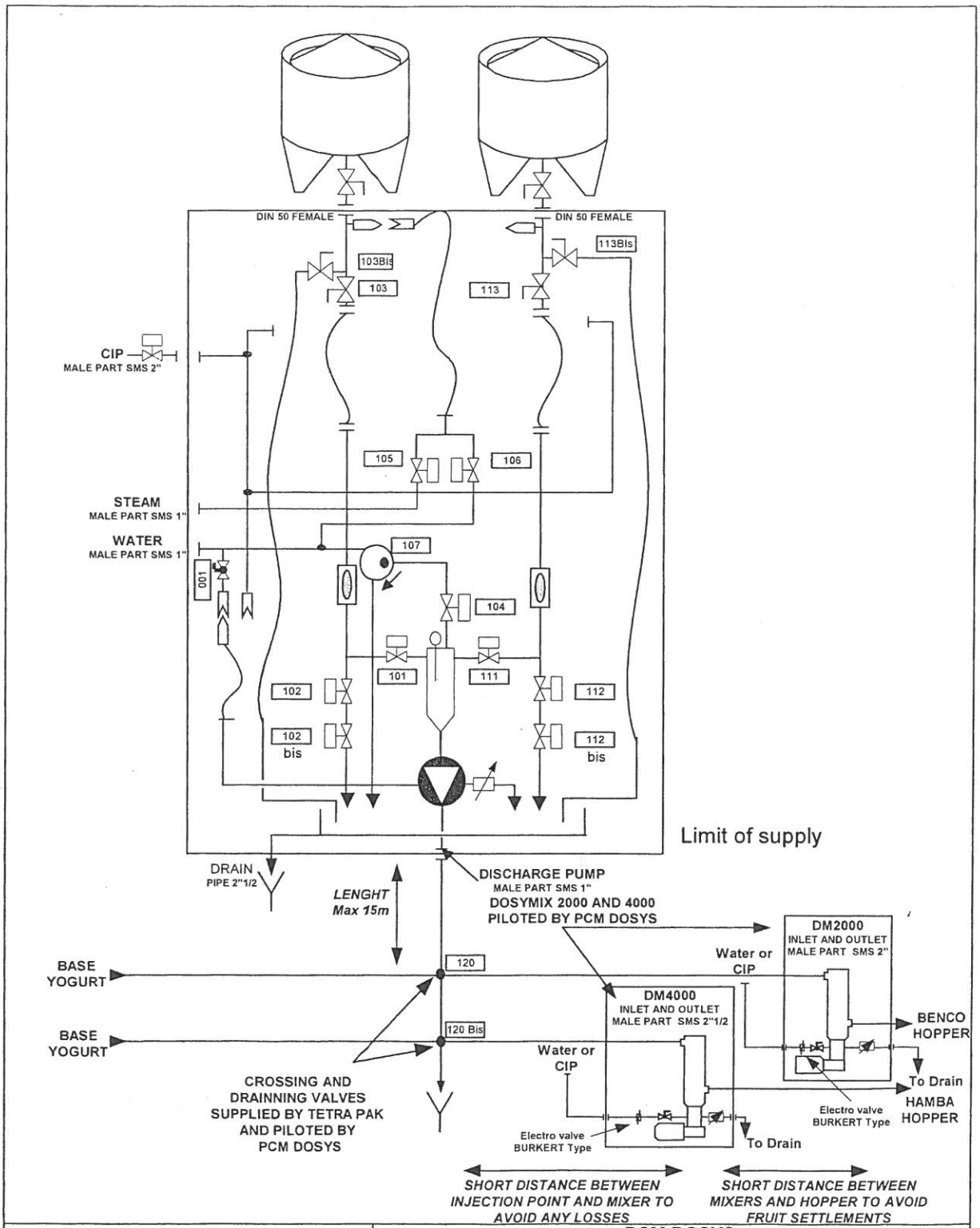

TETRA PAK HELLAS S.A 96 Marinou Antypa 142 35 N. Ionica, GREECE Tel : +30 210 2702565 Fax : +30 210 2718116		**PCM DOSYS** 10 rue Mège Mouriès, 78518 Rambouillet cedex - Tel: (33) (0)1 30 46 50 05 / Fax: (33) (0) 1 30 59 88 02	
		DOSYFRUIT V 4	
Dessiné par: LH + PV	31/07/03	PROJECT N° CD057-00	N° CD057-002-HYD

CD057 Date : 23 décembre 2003

CE

SOMMAIRE

1. INTRODUCTION

Preparation for initial production

To be able to change containers during production, each of the pumps may be fed by 2 independent lines (line A or line B) while the choice of line in service is arbitrary.

Before starting initial production, the operator must first of all start the following function from the user screen:

- CIP function

Using the controls remoted to the electro-pneumatic cabinets of each skid, the operator must then run through the following steps:

- Sleeve rinsing.
- Sleeve sterilisation.
- Sleeve priming.

Finally, from the operator screen, the operator must initiate the function:

- Complete line priming function.

Note:
The sleeve priming and sterilisation functions can be started off line during production to prepare for a change of containers, for instance.

2. CLEANING IN PLACE

Scope:

Used for cleaning:

- Fruit sleeves (between fruit container and Dosys)
- The pumps

Implementation:

The installation must be energized and at a stop.

- ❑ **Make sure that the sterilization sleeves are disconnected from the fruit supply sleeves.**
- ❑ **Connect the fruit supply sleeves of lines A and B to their CIP port.**
- ❑ **Press on the CIP button.**
- ❑ **Adjust the pumps to 100% for efficient cleaning**
- ❑ **The piston rises to the upper dead centre.**

Launching of cleaning on Dosyfruit screen.

Make sure that everything is connected for cleaning (bridging table, sleeves, etc.))

Press the **CIP** button.

The display indicates: **CLEANING IN PLACE** function
The operator presses the **Return** function
The cleaning in place function has to be cancelled.
The display indicates the system main page.

The display indicates: **CLEANING IN PLACE** function and displays the following message
"AWAITING CIP LAUNCHING FUNCTION"

Dosyfruit is ready for CIP and is in the process standby function.

Launching of cleaning on PROCESS screen.

The process launches the cleaning start function.

⇨ **CIP IS IN PROGRESS.**

DOSYS undertakes a succession of cleaning phases with beating of the valves and circulation of the product through all the piping.

Confirmation by Dosys

- The display indicates: The **CLEANING IN PLACE** function and displays the elapsed cleaning time.

- Pressing the **STOP** key provokes the stoppage of the cleaning request.
  DOSYS displays the time taken for cleaning in minutes.

- The process launches the cleaning end function.
  The pump cleaning and stopping phases stop.

- The display indicates: **CLEANING IN PLACE** function and displays the **TERMINATED** message with the total CIP time.

→ Description: Filar (or via network) exchange informing about the operating condition of the installation during cleaning.

Setting of the installation to the cleaning position (capacity of the pumps at 100% connection of the container connection sleeves. etc.)

Validation by operator manning the control panel

DOSYS	Ready for CIP →	Client

Information = 0 : Dosys installation not ready for cleaning
Information = 1 : Dosys installation ready for cleaning, pumps in open position and at a stop. Dosys displays the message "Ready for CIP".

Launching of cleaning on Clinet screen.

DOSYS	← CIP Start	Client

Information = 0: The pumps are in the open position and at a stop.
Information = 1: The information goes to 1 when the client sends the CIP solutions to the Dosys installation Dosys: the pumps are in the open position and run the cycles in sequence. Dosys displays the message "CIP in progress".

Confirmation by Dosys

DOSYS	CIP in progress →	Client

Information = 0: Dosys installation not in cleaning phase.
Information = 1: The Dosys information with the pumps in the open position, runs through the cleaning phases. Dosys displays the message "CIP in progress".

Stoppage of cleaning on Client screen.

DOSYS	← End of CIP	CLIENT

Information = 0:

Information = 1: The information goes to 1 at the end of CIP. The cleaning phases are interrupted and the Dosys installation is stopped pending selection by the operator pending his selection of another mode of operation.

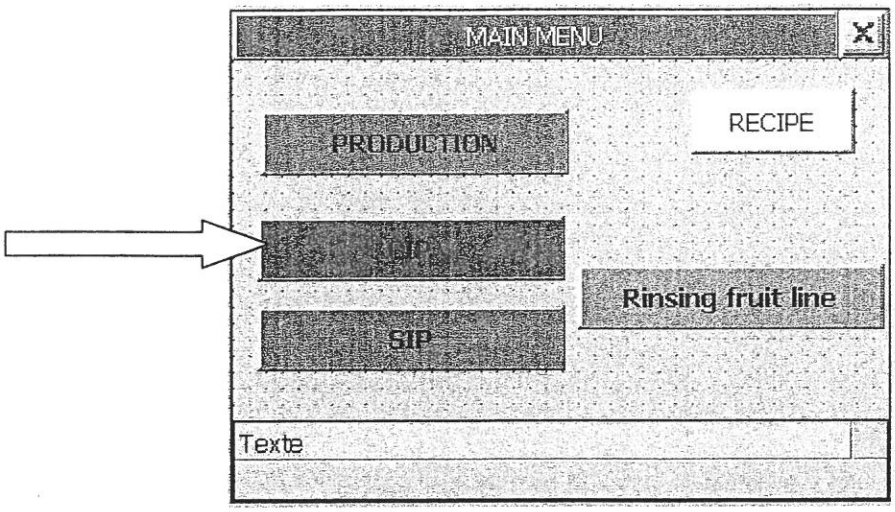

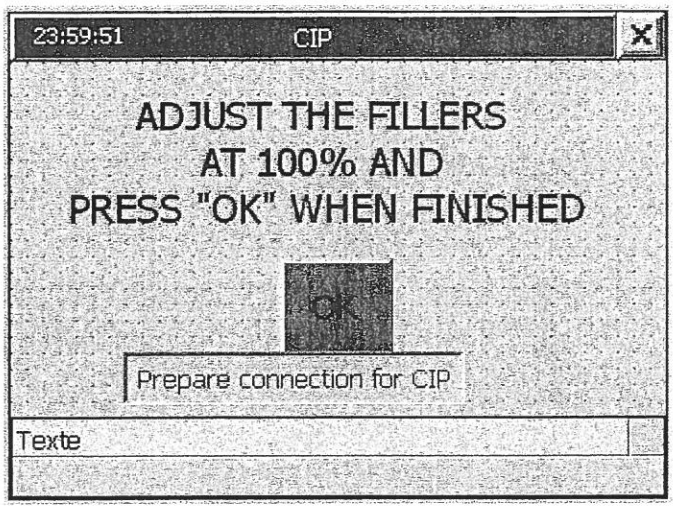

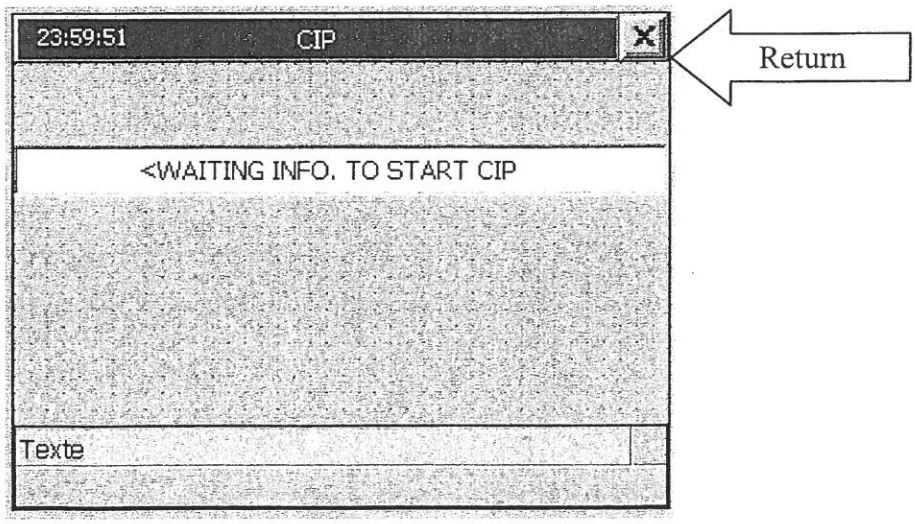

2.1. TIMING DIAGRAM

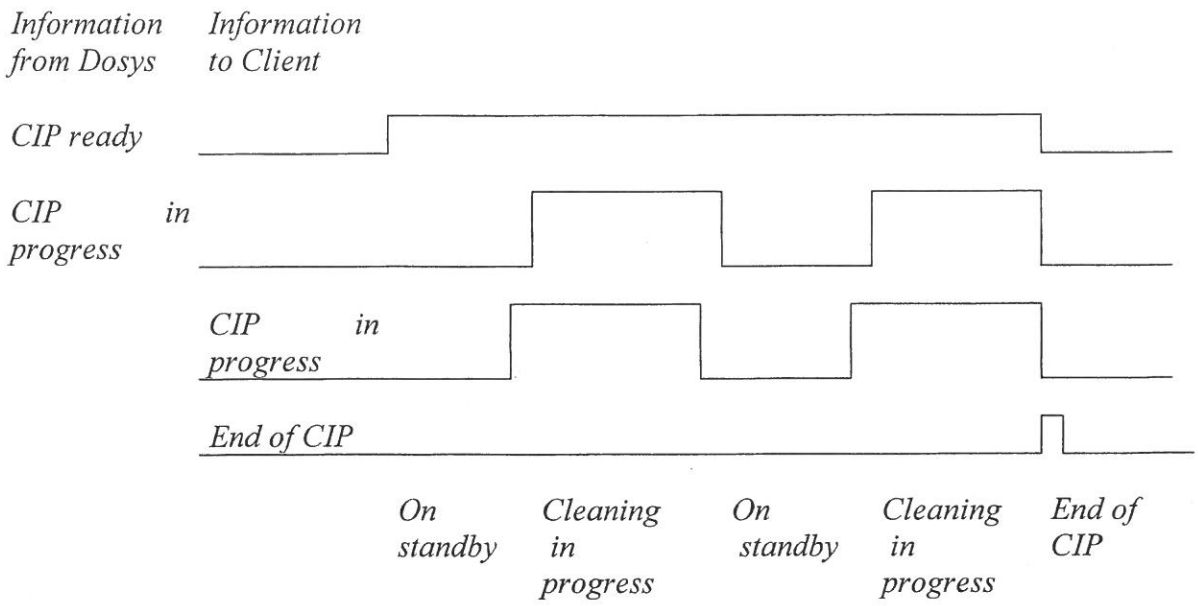

From Dosys to CLient	From Client to Dosys
Ready for CIP	
	CIP Start
CIP in progress	
	End of CIP

3. PREPARATION FOR PRODUCTION

3.1. SLEEVE RINSING

Scope:

Used for cleaning:

- Fruit sleeves (between fruit container and Dosys)
- The pumps

Implementation:

The installation must be energized and at a stop.

- ❑ **Make sure that the sterilization sleeves are connected to the fruit supply sleeves.**

3.2. FRUIT SUPPLY SLEEVE STERILISATION

Scope:

This operation is necessary before any production begins to make sure that the lines between the containers and the detection chambers are clean.

The sleeves must be sterilised before the container foot valve is opened in the following cases:

- initial production
- change of production (fruit on fruit push)

The sterilisation of the sleeves for a change of production or change of container is described in chapter 2.

Note 1:
To prevent residual soiling inside the fruit supply sleeves from cooking, sterilisation is only authorised if the sleeves have already been rinsed out.

Note 2:
Unoccupied sleeves may be rinsed and sterilised separately, off-line during production.

Implementation:

CIP is terminated and the container foot valve is closed.

- ❑ **Make sure that the recovery channels contain enough water to cover the steam evacuation pipes.**
- ❑ **Connect the fruit supply sleeve to the container.**
- ❑ **Connect the sterilisation sleeve to the fruit supply sleeve end**

- **Turn each of the selector switches above the pumps on the electro-pneumatic cabinets to the rinsing position.**

  Note:
  Within the framework of initial production, there is no need to remain in the rinsing position because the installation was already rinsed at the end of the CIP.

- **Then turn each of the selector switches to the sterilisation position.**
  ⇒ Sterilisation is initiated and will only be validated if it has lasted 10 minutes.
  ⇒ The green lighted sterilisation buttons will flash slowly.

  - The sterilisation is complete.
    ⇒ The green lighted sterilisation buttons will light up.
    ⇒The steam inlet valves will close automatically.
    ⇒ The sleeves are ready to be primed.

- **Then bring the selector switches to the off position and allow the sleeve to cool for a few moments.**

3.3 SLEEVE PRIMING

Scope:
Used for filling the supply lines with fruit, with lines running from container to detection pot located just upstream of the pump

Implementation:
The sleeves are connected to their container, they are sterilised, and the green lighted push buttons are flashing slowly.

- **Before priming, make sure that the temperature of the sleeves has come back down.**

- **Connect the sterile flexible hoses at the head of the container.**
  ⇒ The containers are pressurised at a minimum of 0.6 bar.

- **Disconnect the sterilisation sleeves from the fruit supply sleeves using clubs to avoid burns.**

- **Open the manual valves at the foot of the container.**

- **Hold the flashing green pushbutton down until the fruit entirely fills the sight at the detection pot inlet.**
  - ⇒ The sleeve is now primed.
  - ⇒ The lighted button remains on continuously.

- **Repeat the operation for each of the pump assemblies.**

Note 1:
If the button has been released too early, press it again until the fruit fills the sight entirely.

Note 2:
Any sleeves that are not connected may be primed independently off line during production.

Note 3:
It is possible that a little fruit is spilled into the recovery chute during the priming of the sleeve.

Simultaneous connection of two sleeves:

If the supply sleeves of the same pump are both connected to a container, it is possible to prime the 2 sleeves in succession.

By default, production start-up will be on the first of the two primed machines. (the one for which the lighted button remains lit).

⇒ The lighted button of the first primed sleeve remains on.
⇒ The lighted button of the second primed sleeve flashes quickly.

However, after priming the two sleeves, if the operator wants to begin production with the last primed sleeve he must:

- **Press first on the fast flashing button corresponding to the second primed sleeve.**

⇒ The button of the first sleeve begins to flash.
⇒ The fast flashing of the button becomes a steady light.

By default, production start-up will be on the second of the two primed machines. (the one for which the lighted button remains lit).

⇒ The lighted button of the first primed sleeve continues to flash quickly.
⇒ The lighted button of the second primed sleeve is on.

Note 1:
An unlit indicator light means that the sleeve is deactivated. Therefore, it is necessary to rinse, sterilise and primed it to reactivate.

- **Pressing the flashing lighted button of a primed sleeve a second time.**

This provides free selection of the sleeve for production.
It is a way of manually changing over the container in production.

⇒ The flashing button of the first sleeve stays on continuously.
⇒ The button of the first sleeve continues to flash.

4 . PRIMING LINE

Scope:

Two completely prime the fruit lines from the containers to the injection points located upstream of the mixers.

Implementation:

Each of the pumping units must be ready to produce; this means that at least one sleeve should be connected and primed up to the detection chamber.

- **First press on the priming key to gain access to the priming function.**

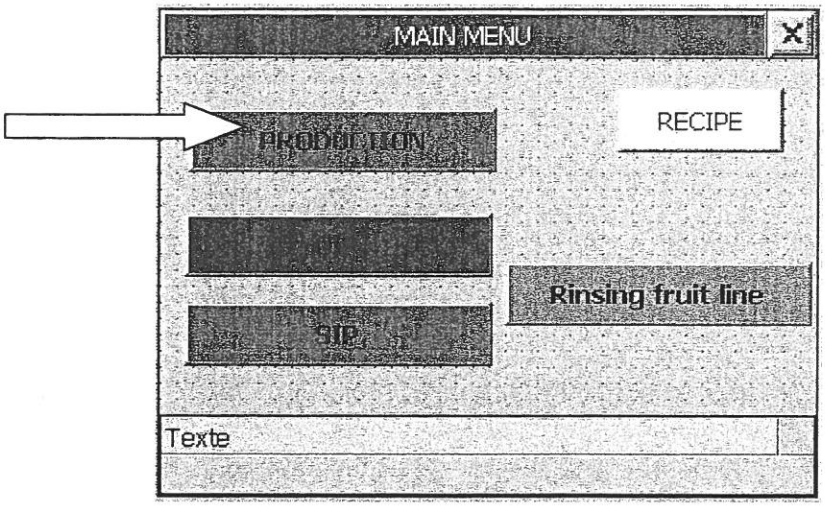

- The pumps are adjusted to 100 percent of their capacity by the operator.
  ⇒ The one hundred percent capacity is achieved.

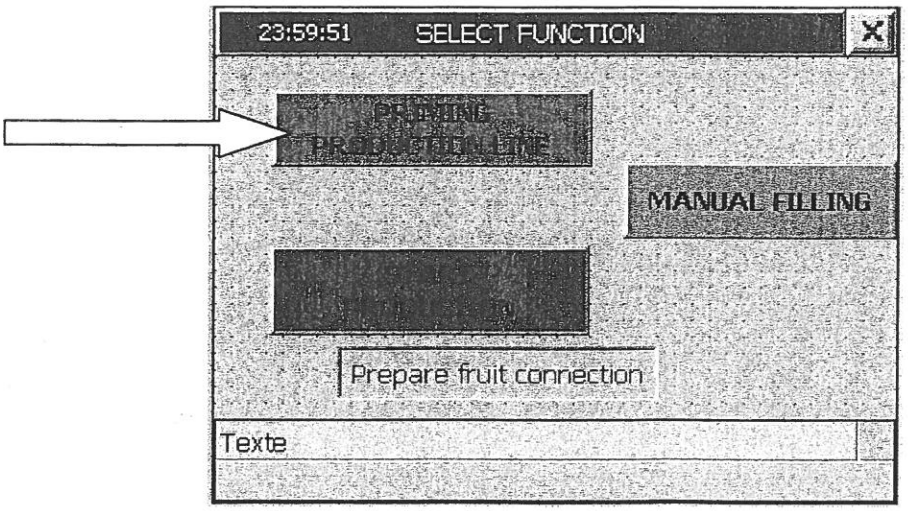

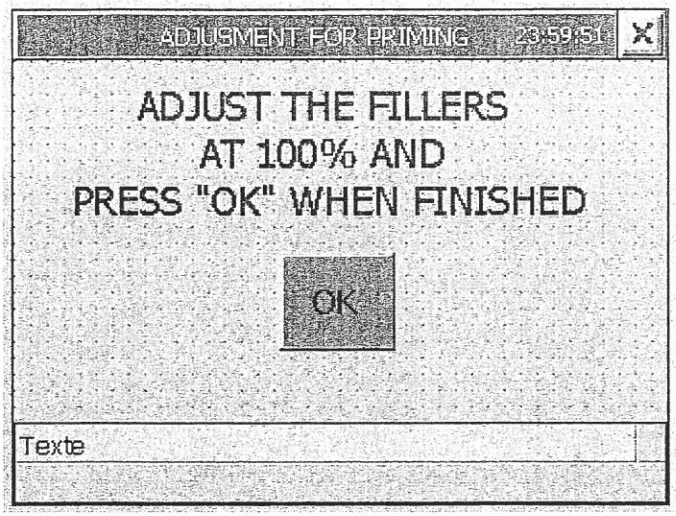

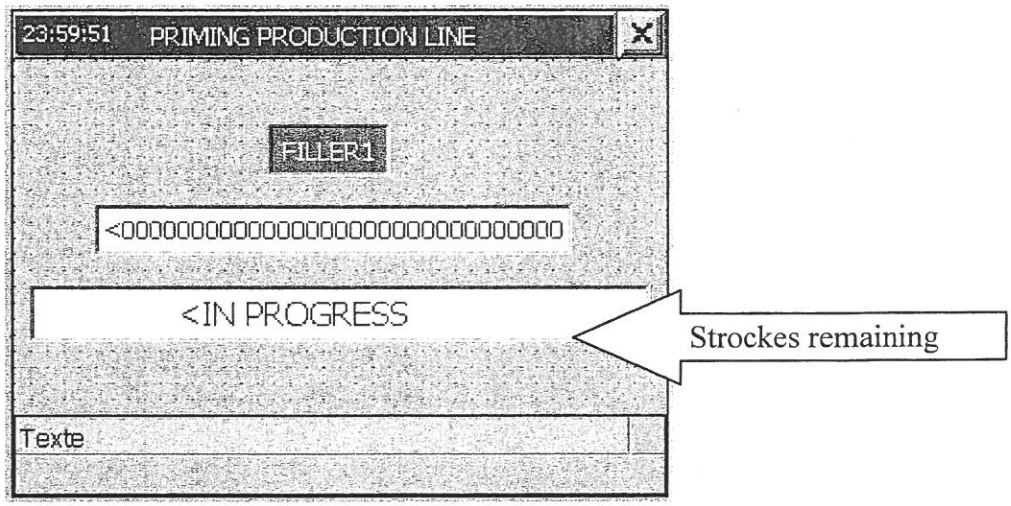

The pumps begin operating at the same time for the preselected number of strokes.
When the number of strokes reaches zero for the two pumps, priming is complete.

Note 1:
If, during the priming phase, the detection pot detects that the fruit level is too low, a "fruit shortage" fault will appear on the main control screen.
The causes and remedies of this problem may be:

- Insufficient container pressurising.
  ⇒ check that the container head pressure is at least 0.5 bar.

- Incorrect priming of one or several sleeves.
  ⇒ check that the sights are full of fruit.

- Excessive product viscosity.
  ⇒ check that the containers have not been stored in too cold a place.

- An SMS coupling that is incorrectly tightened at the container foot causing an air intake.
  ⇒ tighten the SMS coupling

- The container foot valve is not open.
  ⇒ open the valve.

- The Liquefying level probe is maladjusted or defective.
  ⇒ check the operation of the probe.

Note 2:
After correcting the problem, acknowledge the fault by pressing the fault acknowledgement button.

- Automatic priming continues and can be completed in manual mode to compensate for any lost pump strokes on the line which suffered from the problem.

5. PRODUCTION MODE

Scope

The automatic mode is the main operating mode.
In this mode, the operation of the fruit pumping units is synchronised with the conditioning machine pump.

Implementation:

- **First press on the AUTO button to enter the pumping menu.**
- Select the desired recipe number from the digital keypad then press OK.
- **Press Valid to enter the automatic mode.**
  The settings of the pumps to be made are displayed as a percentage calculated with respect to the recipe under way.

- The installation is waiting for the pumping pulse, depending on the conditioning machine.

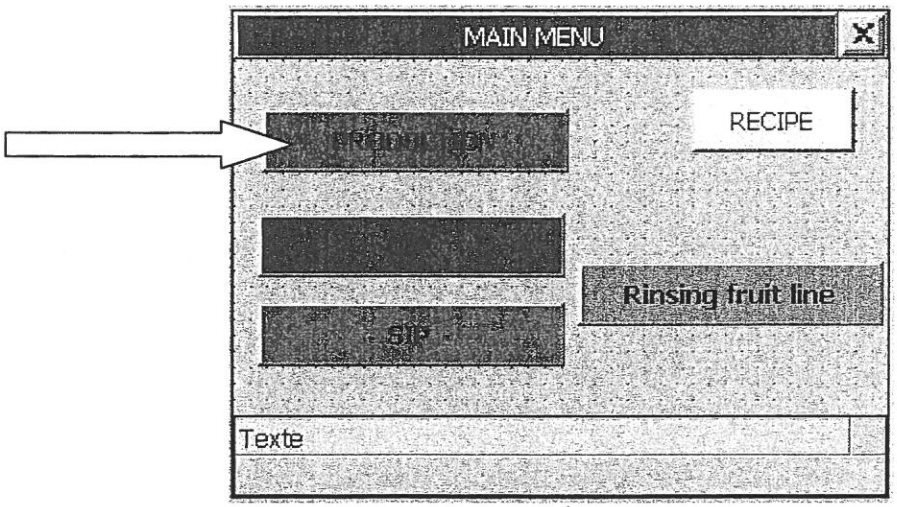

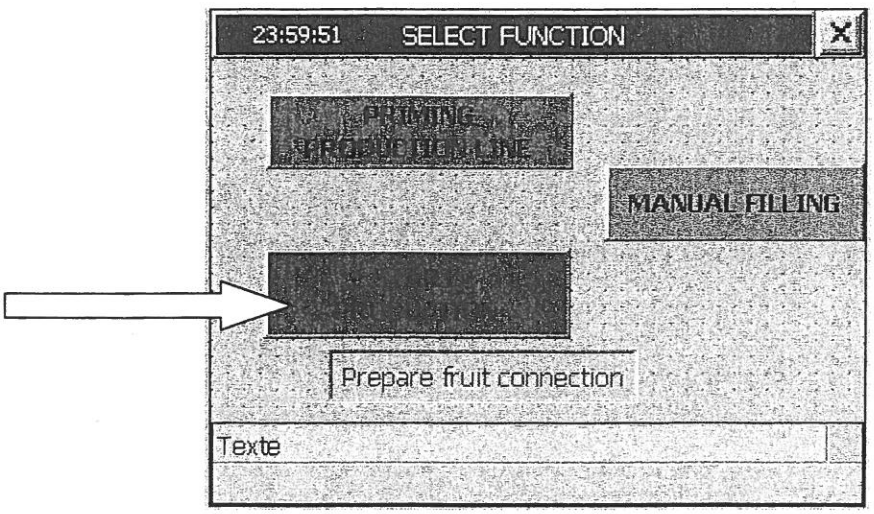

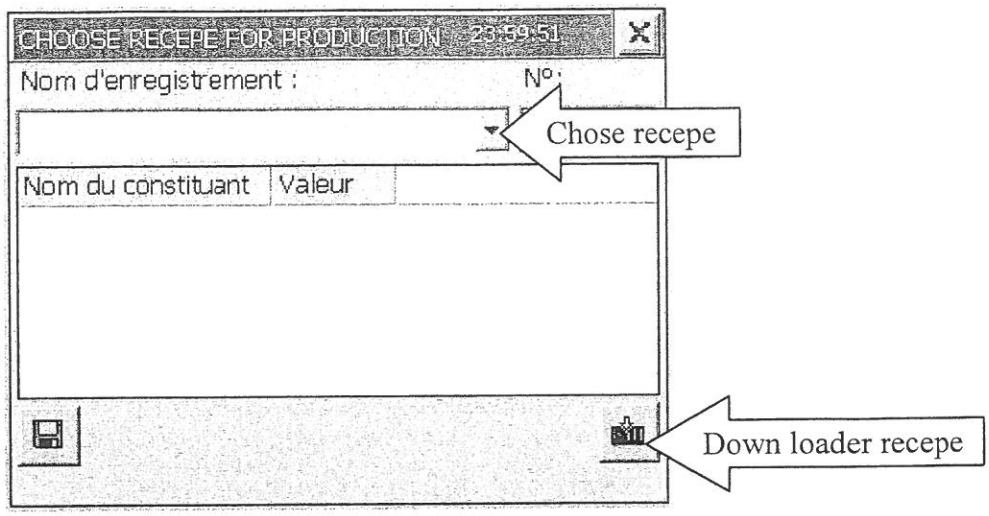

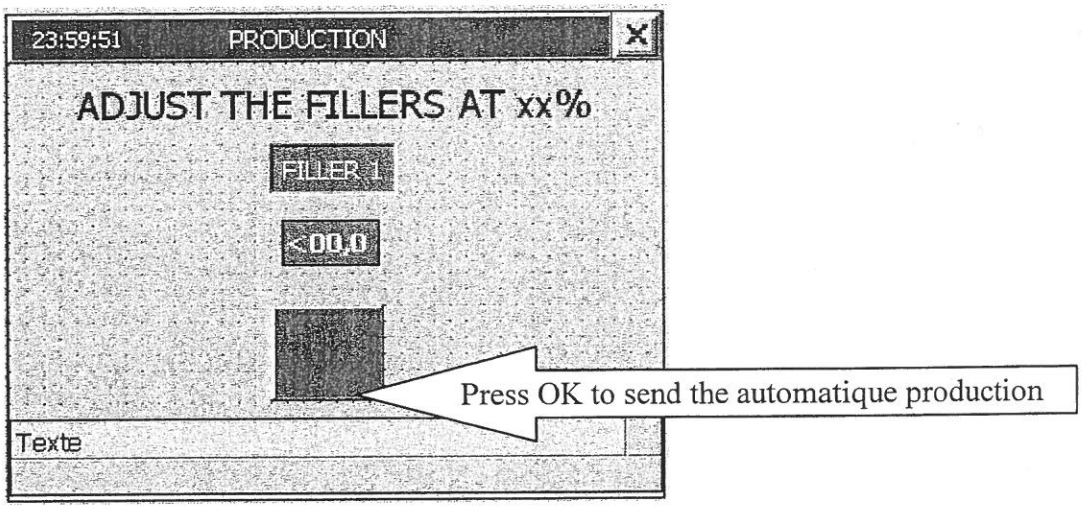

Pumping pulse

→ Description: Cabling exchange giving the order to pump to the Dosys installation.

The dosys installation is in production All the conditions are satisfied to ensure automatic operation. The product containers are ready, connected and primed.

DOSYS	← Pumping pulse	Client

Information = 0: No pumping.

Information = 1: The information is set to 1 when the conditioning pump does not start its suction phase (duration = 0.2 seconde). All the client valves are in the production position.

End of cycle
Dosys validates the fact that pumping was successful.

DOSYS	End of cycle →	Client

Information = 0: The pumping cycle is under way.
Information = 1: The information is set to 1 when the Dosys pump has completed its cycle. The client has to wait to receive the "End of cycle = 1" information before giving another "pumping pulse = 1" pumping order.

To check the performance of the pump, the Client must check the loss of cycle end information then feed back the cycle end information.

5.1 TIMING DIAGRAM

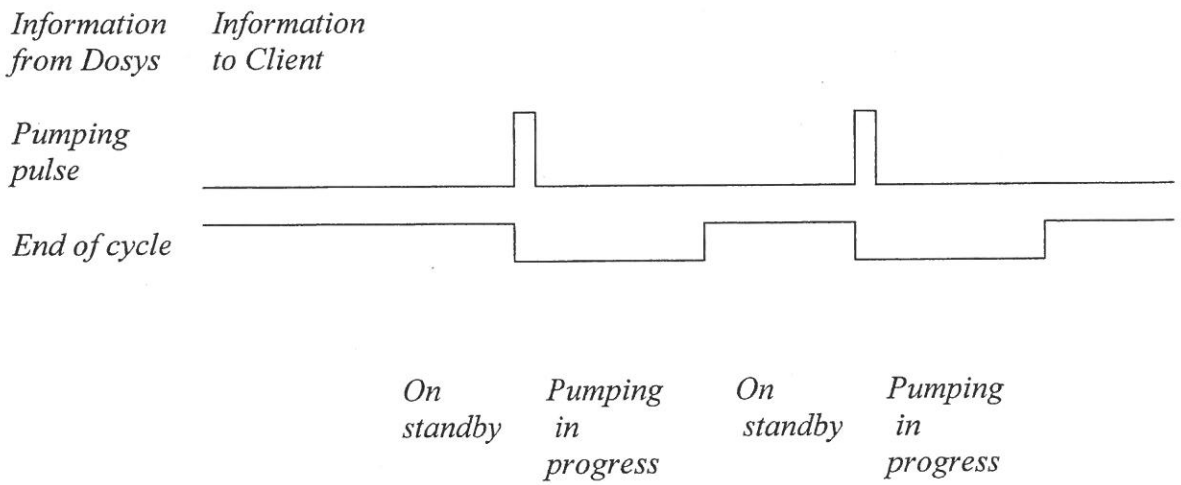

From Dosys to CLient	From Client to Dosys
End of cycle	
	Pumping pulse

6. AUTOMATIC CONTAINER CHANGEOVER

During production, at the end of a container, the installation changes over from the empty container to the full container if the latter has been prepared. On changeover, a siren sounds and continues to operate until the operator acknowledges it (sleeve sterilized and primed).

This operation is systematic and has its own advantages and drawbacks.

Attention must be paid to the following points:

- The container on standby must contain the right fruit.
- When it about time to change fruit, if there is any doubt about the quantity of fruit still in the container in use, it is better to wait until the last moment to validate the primingof the replacement container.

  This method avoids the risks of inadvertently changing over which could cause a loss of production.

7. CHANGE OF PRODUCTION (OR CHANGE OF FRUIT)

Scope

This function makes it possible to change fruit during production by minimizing the amount of lost product and time.

Implementation:

The installation is in production with automatic mode engaged.

- **Prepare the new fruit containers by sterilization rinsing and priming of the sleeves and pressurizing the containers.**

  ⇒ The green indicator lights corresponding to the prepared sleeves then flash quickly.

- **Start the CHANGE FRUIT function.**
- **Select the lines to be changed over for the change of production.**

  ⇒ It will be possible to validate the change of production only if at least one line has been selected and if this line has one sleeve in production and one on standby.

Dosys calculates the number of strokes remaining to be pumped with the former flavor and compares it with the number of strokes needed for fruit-on-fruit pushing. Dosys changes over to the new container, starts the pushing counter and displays a "Change of fruit in progress" message. Fruit pushing takes place in synchronization with the conditioning machine.

- . This changeover is calculated according to the change of production volumes entered into the recipe and, if necessary, taking into consideration the number of pots to be produced, before pushing is over.

  Dosys calculates the number of strokes remaining to be pumped with the former flavor and compares it with the number of strokes needed for fruit-on-fruit pushing. Provided the number of strokes yet to be pumped using the old flavor is greater than the number of strokes required for fruit-on-fruit pushing, Dosys will continue to pump the old flavor and display a "Waiting for change of fruit" message. When the two values are identical, Dosys changes over to the new container, starts the pushing counter and displays a "Change of fruit in progress" message.
- When the number of strokes remaining is zero, fruit-on-fruit pushing terminates. Dosyfruit closes the injection valve, opens the purge valves so as to evacuate the dilution front to the drain and display a message "Change of fruit purge in progress". This number of strokes is calculated using the purge volume for a change of production entered into the recipe, and is not synchronized by the pumping pulses.

→ Description: Filar exchange (or via network) informing the client about the state of the installation for production.

The Dosys installation is in production All the conditions are satisfied to ensure automatic operation. The product containers are ready, connected, primed and the product line is primed.

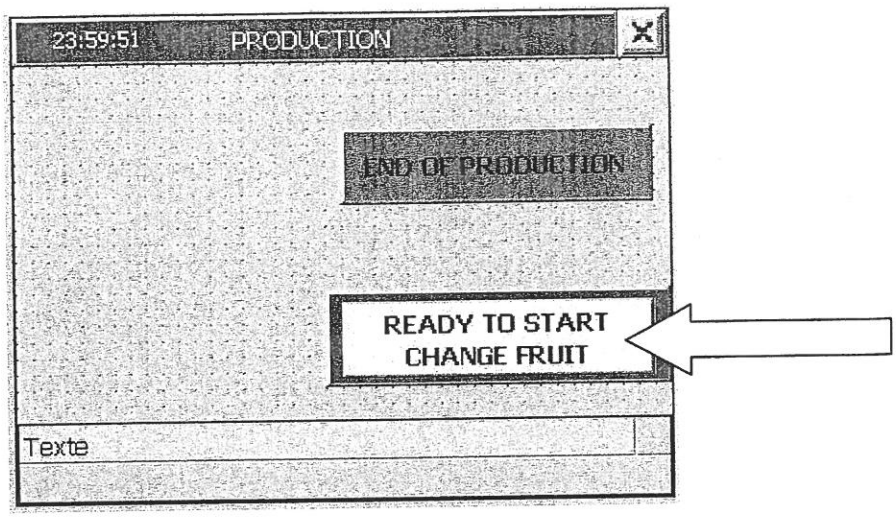

Change of flavor:
The operator prepares a container of the new flavor on the line that is not is operation and validates it by the corresponding pushbutton.
PROCESS anticpates the demand for a change of flavors before the end of its production.

DOSYS	Change of fruits ←	PROCESS

Information = 0:
Information = 1: The information goes to 1 when the client is ready for a change of flavor for the Dosys installation.

DOSYS	Fruit on fruit push in progress →	PROCESS

Information = 1: Infor goes to 1 when Dosys starts fruit on fruit pushing.
Information = 0: Info goes to 0 when Dosys has finished fruit on fruit pushing and at the same time the "fruit ready" goes to zero. Dosys purges the dilution front. The operator has chosen a new recipe an operator console, the "Fruit ready" information is set to 1 and Dosys is ready to produce.

7.1. TIMING DIAGRAM

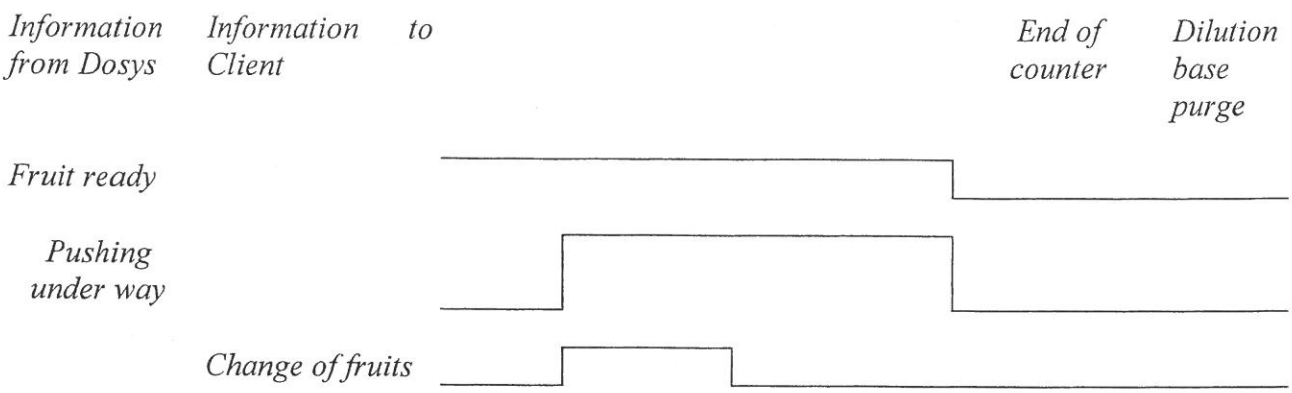

From Dosys to Client	From Client to Dosys
Fruit ready	
	Change of fruits
Pushing under way	

8. MANUAL MODE

Scope

The manual mode is a way of manually running each of the pumps to:

- Complete an incomplete priming,
- Estimate the number of strokes of the pump needed during the priming and change of fruit phases.

Implementation:

This mode is only accessible if each of the dosing pump groups ahs at least one primed sleeve. (operates in theory with complete priming of the fruit lines).

- **Press on the MANU button.**

- **Press the key corresponding to the pump for which operation is to be forced.**

  ⇒ To stop the pump, press the key again.

Diagram of manual mode phase identical to previous chapter.

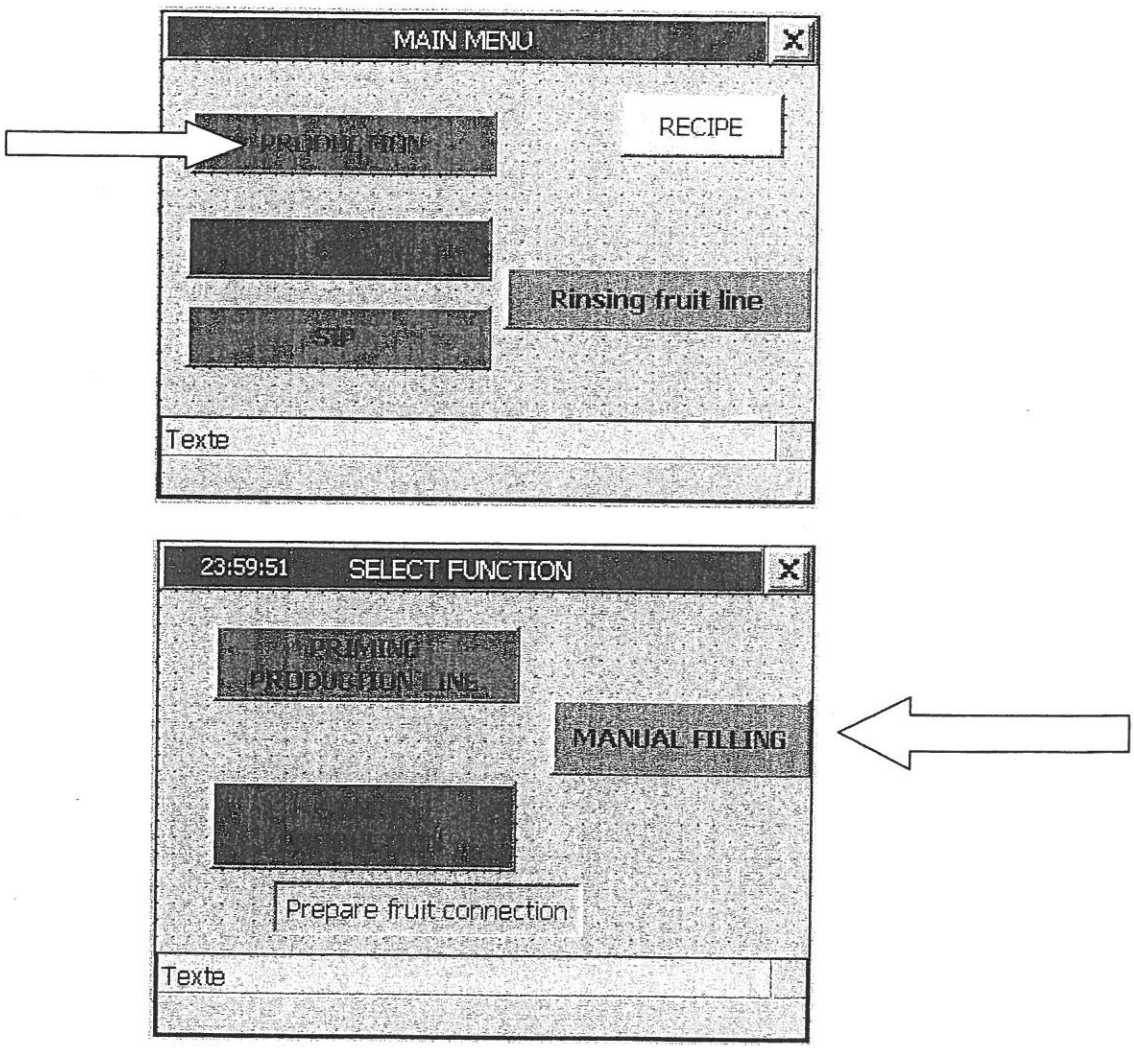

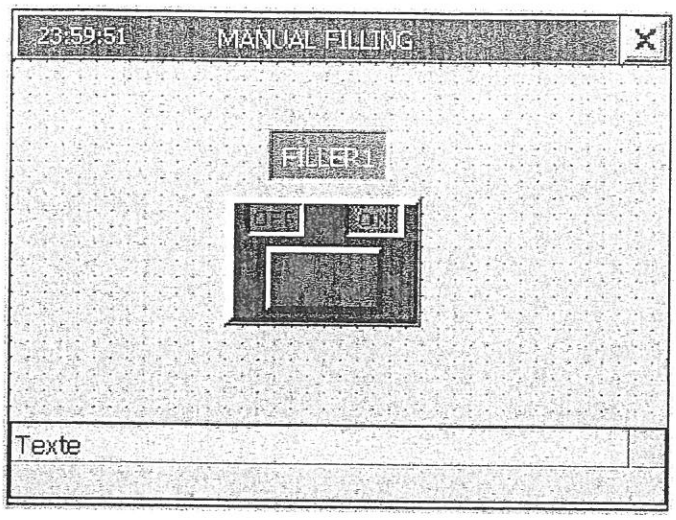

9. END OF PRODUCTION .

Scope

This function makes it possible to push fruit with water during production by minimizing the amount of lost product and time.

Implementation:

The installation is in production with automatic mode engaged.

- **Prepare the both fruit lines :** second time to stop.
  ⇒ Close the tank' s valves connected to the sleeves.

- **Start the PUSH WATER function.**
  ⇒ The green indicator lights corresponding to the prepared sleeves then stop to flash .

Dosys calculates the number of strokes remaining to be pumped with the former flavor and compares it with the number of strokes needed for fruit-on-fruit pushing. Dosys changes over to the new container, starts the pushing counter and displays a "End of production in progress" message. Fruit pushing takes place in synchronization with the conditioning machine.

- . This changeover is calculated according to the end production volumes entered into the recipe and, if necessary, taking into consideration the number of pots to be produced, before pushing is over.
  Dosys calculates the number of strokes remaining to be pumped with the fruit and compares it with the number of strokes needed for the water pushing. Provided the number of strokes yet to be pumped using the old flavor is greater than the number of strokes required for the water pushing, Dosys starts the pushing counter and displays a "push water in progress" message.

  The End of production can be sent by the process or directly by Dosys.

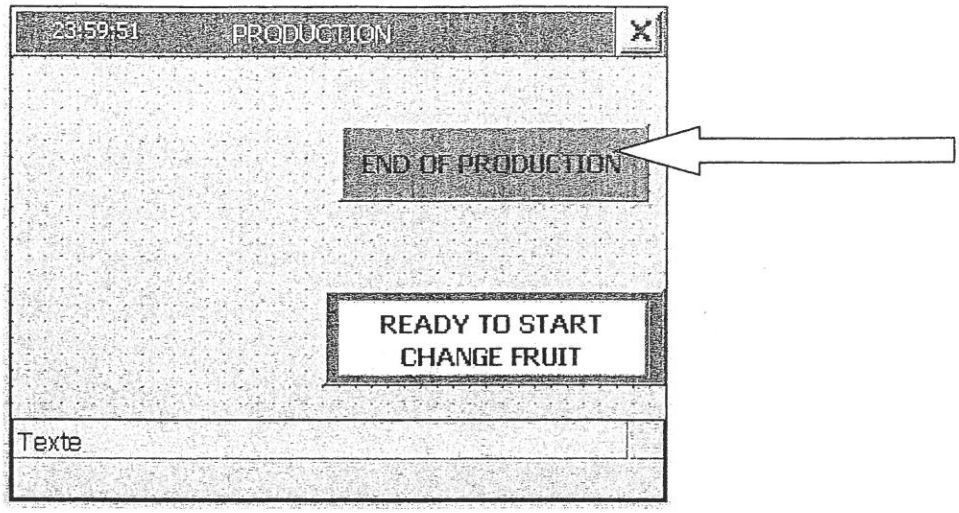

DOSYS	End of production ←	PROCESS OR DOSYS

Information = 1: The information goes to 1 when the client is ready for a Push water for the Dosys installation.

DOSYS	End of production in progress →	PROCESS

Information = 1: Infor goes to 1 when Dosys starts fruit on fruit pushing.
Information = 0: Info goes to 0 when Dosys has finished fruit pushing with water. Dosys purges the dilution front .

10.RINSING FUNCTION

Scope
This function is a way of rinsing the fruit pipes out with water. To be used more particularly during cleaning. During this function, the valve is lowered and valves 120 and 220 are opened. It is accessible during the end of production or starting from the general menu.

There are two possible cases:

During the end of production, a process request is all it takes to rinse the line in production.

Conversely it will be necessary to select the line to be rinsed from the main menu.

Implementation:

- **First press on the rinsing key to gain access to the rinsing function.**

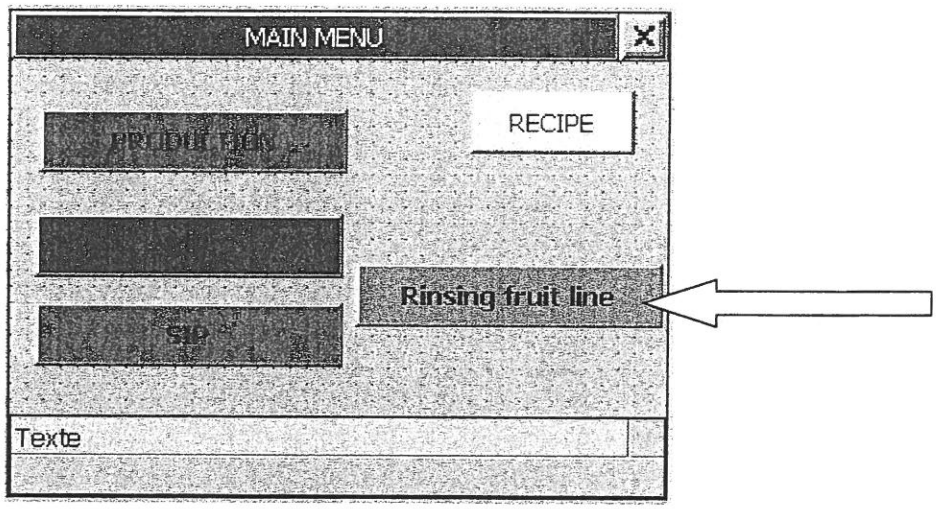

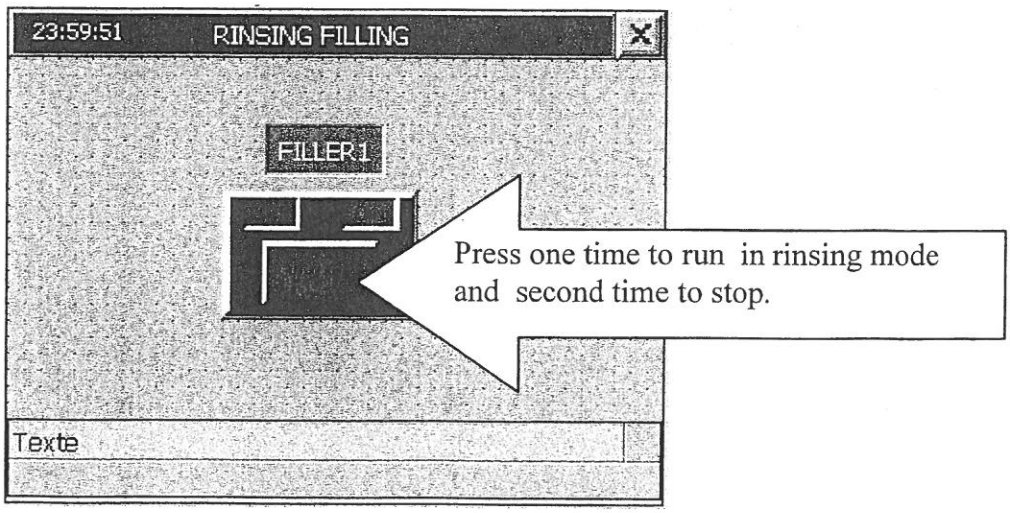

FOLIO	DESIGNATION
02	POLARITY
03	POLARITY
04	POLARITY
05	INTERFACE I/O X12
06	INTERFACE I/O X22
07	SECURITY
08	FLOW CONTROLER
09	inputs E0.0 to E0.7
10	inputs E1.0 to E1.7
11	inputs E2.0 to E2.7
12	inputs E3.0 to E3.7
13	outputs A4.0 to A4.7
14	outputs A5.0 to A5.7
15	outputs A6.0 to A6.7
16	outputs A7.0 to A7.7
17	inputs E8.0 to E8.7
18	outputs A8.0 to A8.7
19	CUSTOMER EXCHANGES
20	NEUMATIC
21	TERMINAL : X0 X0 - 1/1
22	TERMINAL : X1 X1 - 1/1
23	TERMINAL : X10 X10 - 1/1
24	TERMINAL : XD XD - 1/1
25	TERMINAL : XDM1 XDM1 - 1/1
26	TERMINAL : XDM2 XDM2 - 1/1
27	TERMINAL : XE XE - 1/1
28	TERMINAL : XR XR - 1/0
29	Nomenclature (Rep./Folio/Design.Ang/Ref./Fab./Gpic)
30	Nomenclature (Rep./Folio/Design.Ang/Ref./Fab./Gpic)
31	Nomenclature (Rep./Folio/Design.Ang/Ref./Fab./Gpic)

TETRA PACK

IND	MODIFICATION	VISA	DATE

DESSINE	PCM DOSYS	DATE CREATION	23/07/2003
APPROUVE	PCM DOSYS	DATE APPROBATION	07-10-2003
VERIFIE	PCM DOSYS	DATE VERIFICATION	07-10-2003

CE DOSSIER A ETE REALISE AVEC LE LOGICIEL SEE WORLDWIDE d'IGE+XAO

DOSYS Des pompes au process

PCM - DOSYS
10 RUE MEGE MOURIES
ZA DU BEL AIR
BP 101
78513 RAMBOUILLET CEDEX
TEL: 01 30 46 50 00
FAX: 01 34 94 92 83

No D'AFFAIRE: CD057-00

NBRE TOTAL DE FOLIOS	FOLIO
31	01

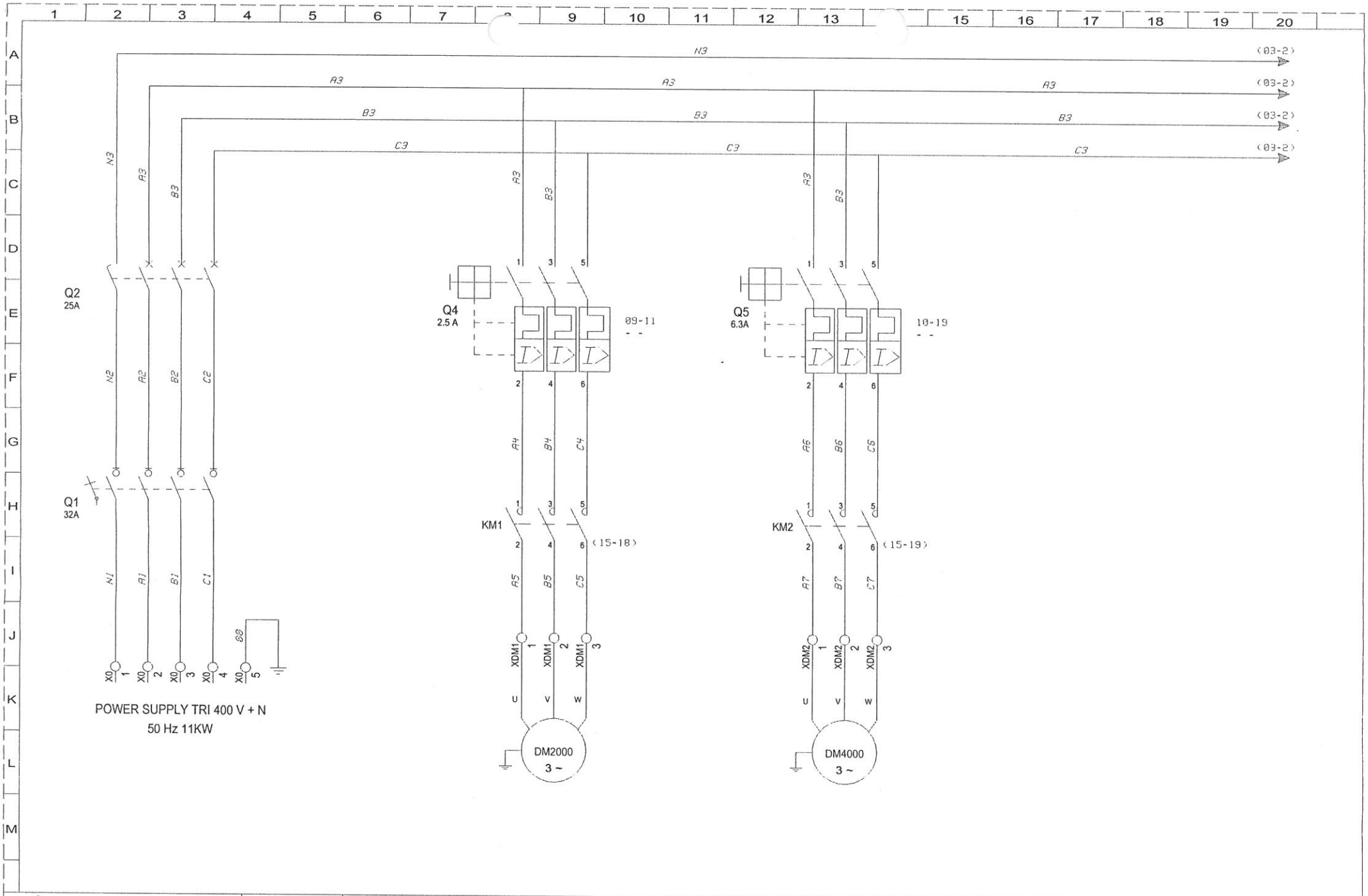

DOSYS Des pompes au process	DESSINE PAR PCM DOSYS	DATE DE CREATION 23/07/2003	TETRA PACK POLARITY	IND	DATE	MODIFICATION	VISA	see WORLDWIDE IGE+XAO	FOLIO: 02
	VERIFIE PAR PCM DOSYS	DATE DE VERIFICATION 07-10-2003							CD057-00

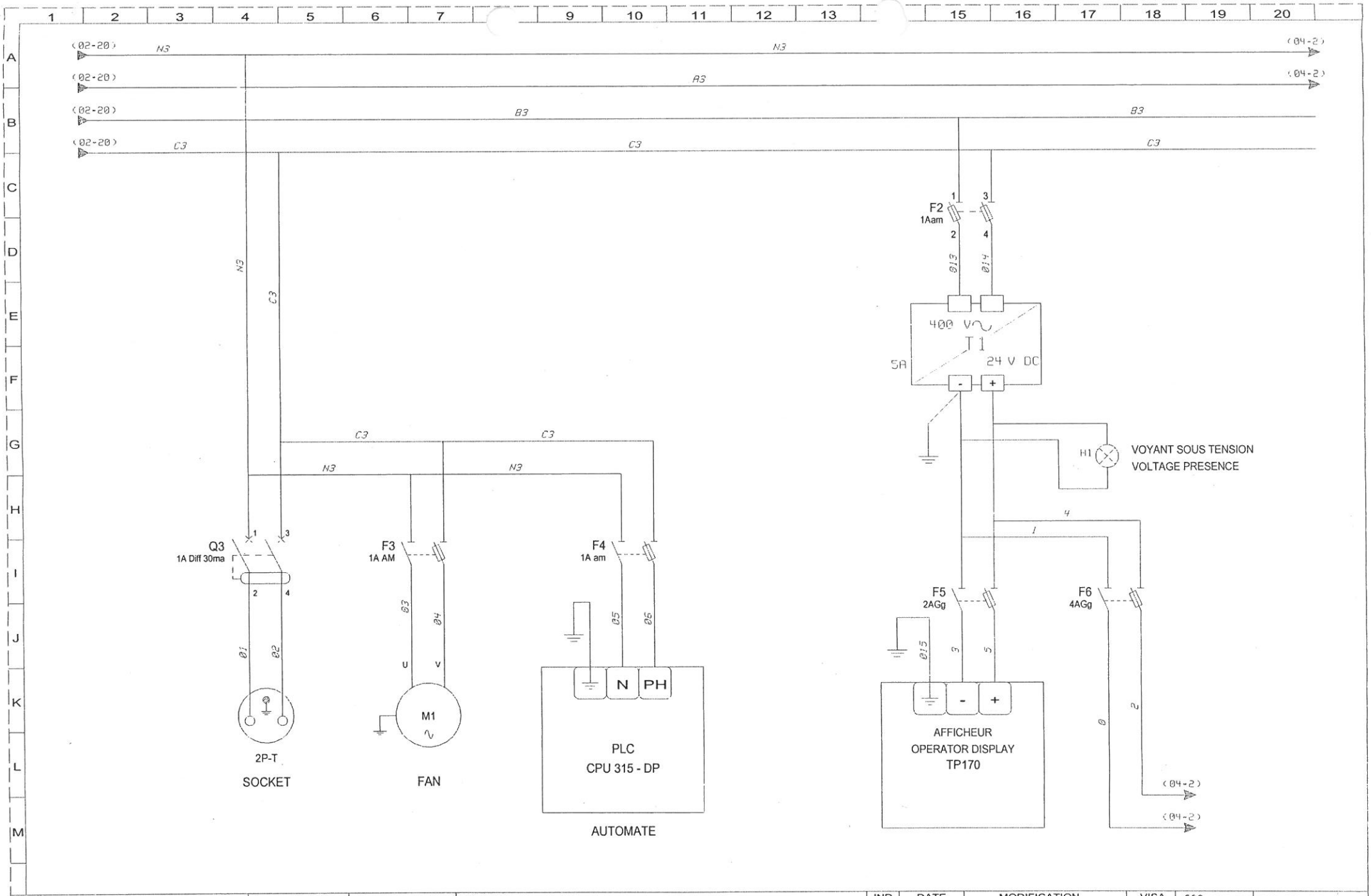

DOSYS Des pompes au process

DESSINE PAR	DATE DE CREATION	TETRA PACK POLARITY	IND	DATE	MODIFICATION	VISA	see WORLDWIDE IGE+XAO	FOLIO: 03
PCM DOSYS	23/07/2003							
VERIFIE PAR	DATE DE VERIFICATION							CD057-00
PCM DOSYS	07-10-2003							

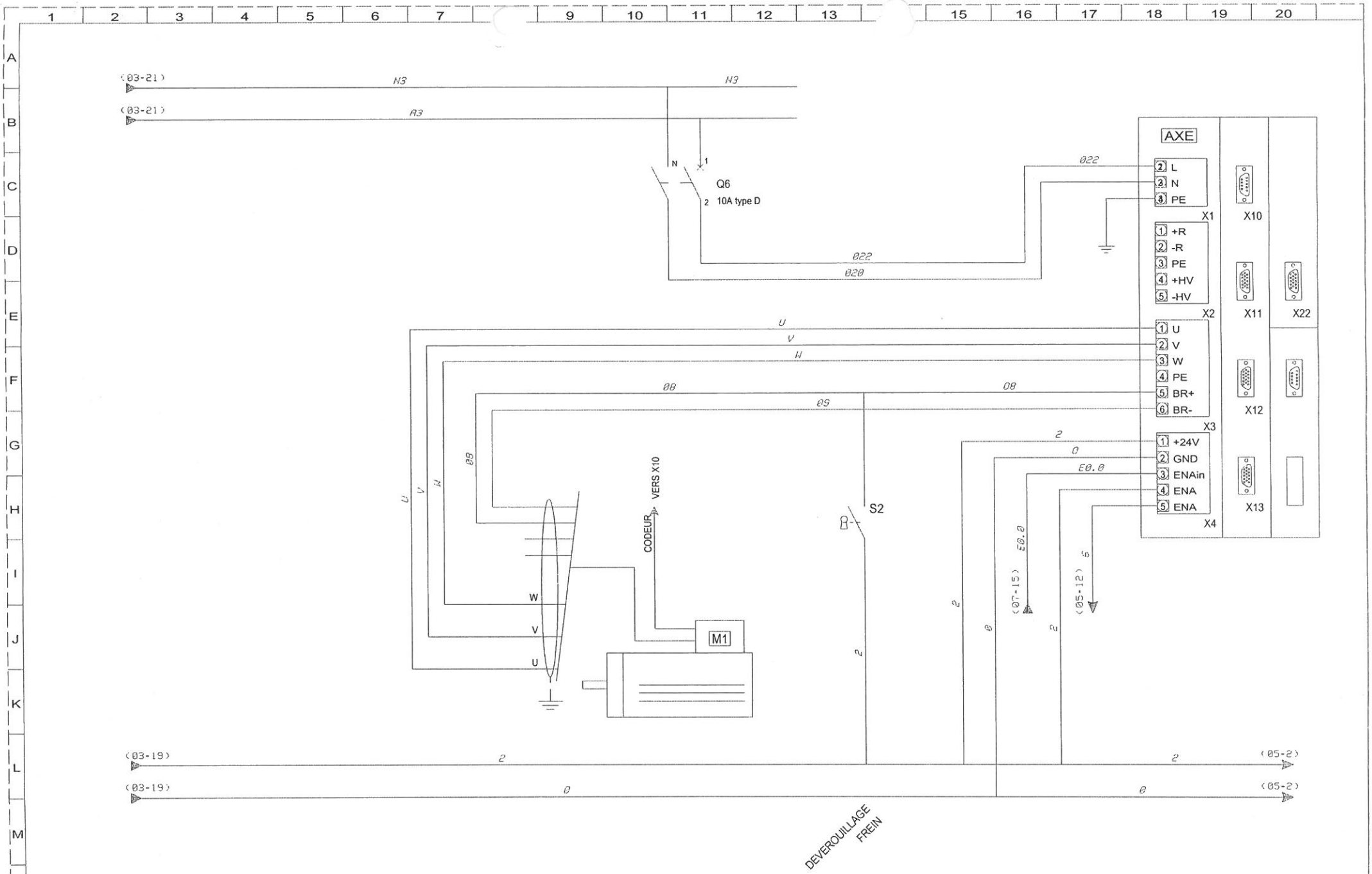

DOSYS Des pompes au process	DESSINE PAR PCM DOSYS	DATE DE CREATION 23/07/2003	TETRA PACK POLARITY	IND	DATE	MODIFICATION	VISA	see WORLDWIDE IGE+XAO	FOLIO: 04
	VERIFIE PAR PCM DOSYS	DATE DE VERIFICATION 07-10-2003							CD057-00

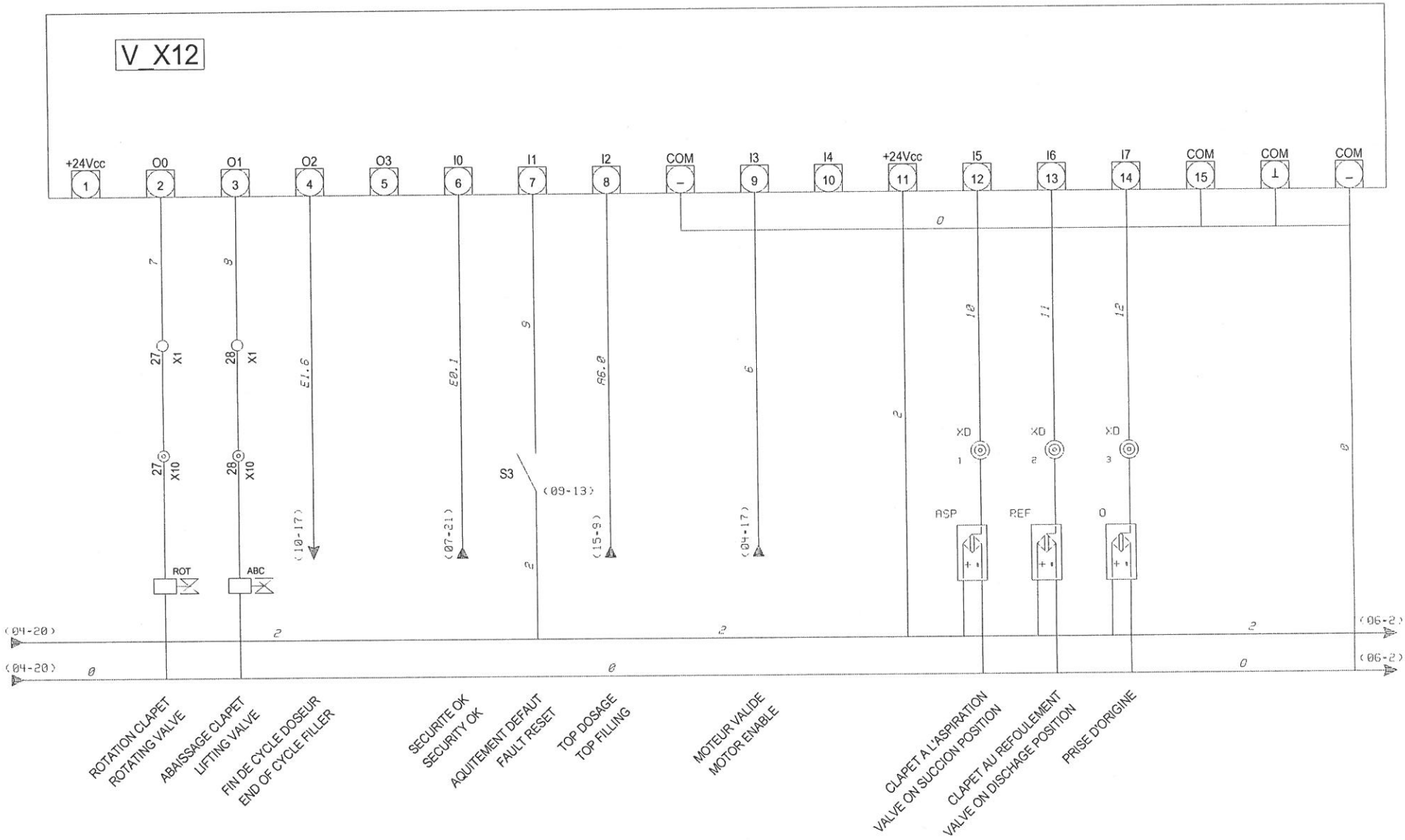

DOSYS Des pompes au process

DESSINE PAR	DATE DE CREATION	TETRA PACK	IND	DATE	MODIFICATION	VISA	SEC WORLDWIDE IGE+XAO	FOLIO: 05
PCM DOSYS	23/07/2003	INTERFACE I/O X12						
VERIFIE PAR	DATE DE VERIFICATION							CD057-00
PCM DOSYS	07-10-2003							

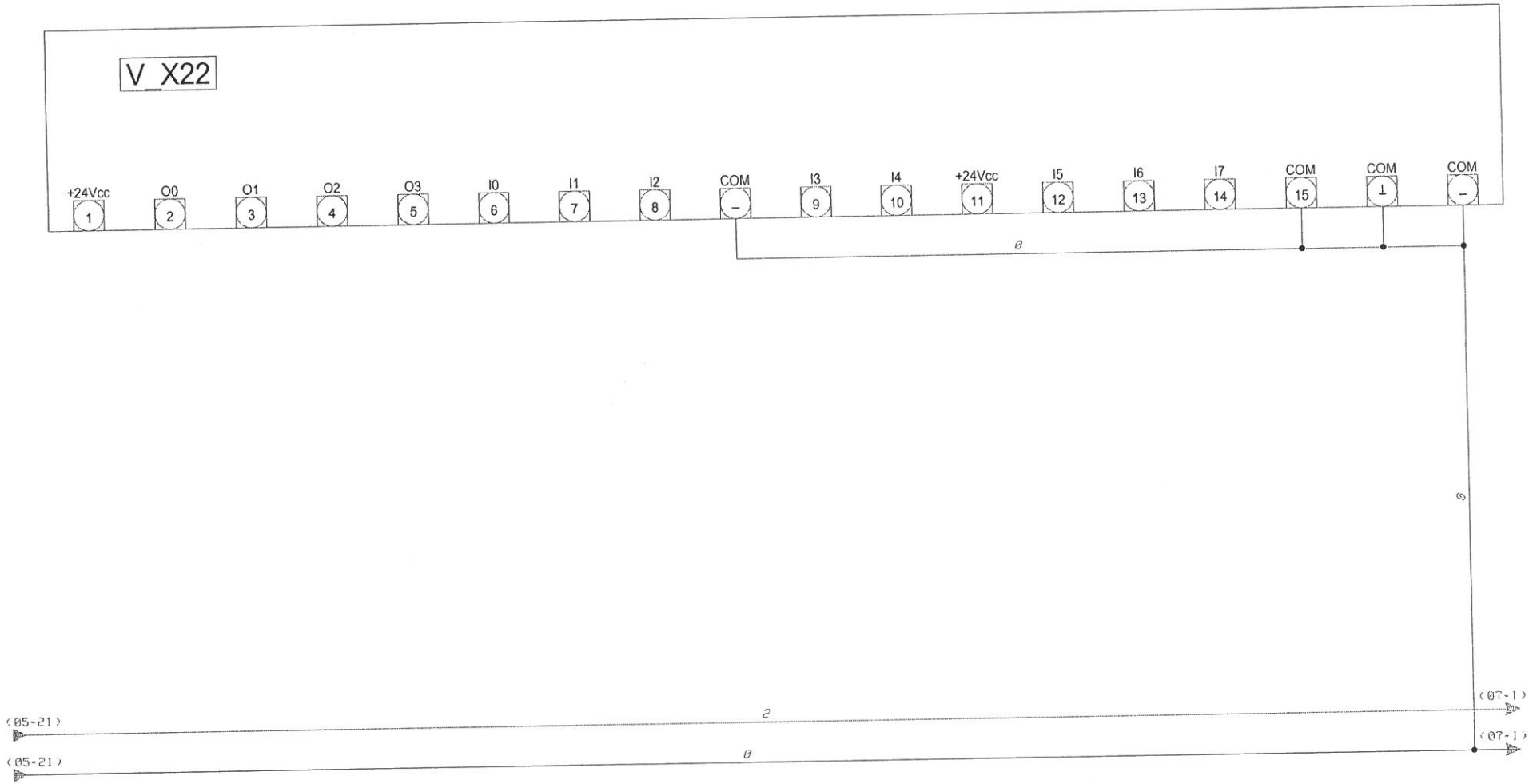

DOSYS Des pompes au process

DESSINE PAR	DATE DE CREATION
PCM DOSYS	23/07/2003
VERIFIE PAR	DATE DE VERIFICATION
PCM DOSYS	07-10-2003

TETRA PACK
INTERFACE I/O X22

IND	DATE	MODIFICATION	VISA

see WORLDWIDE IGE+XAO

FOLIO: 06

CD057-00

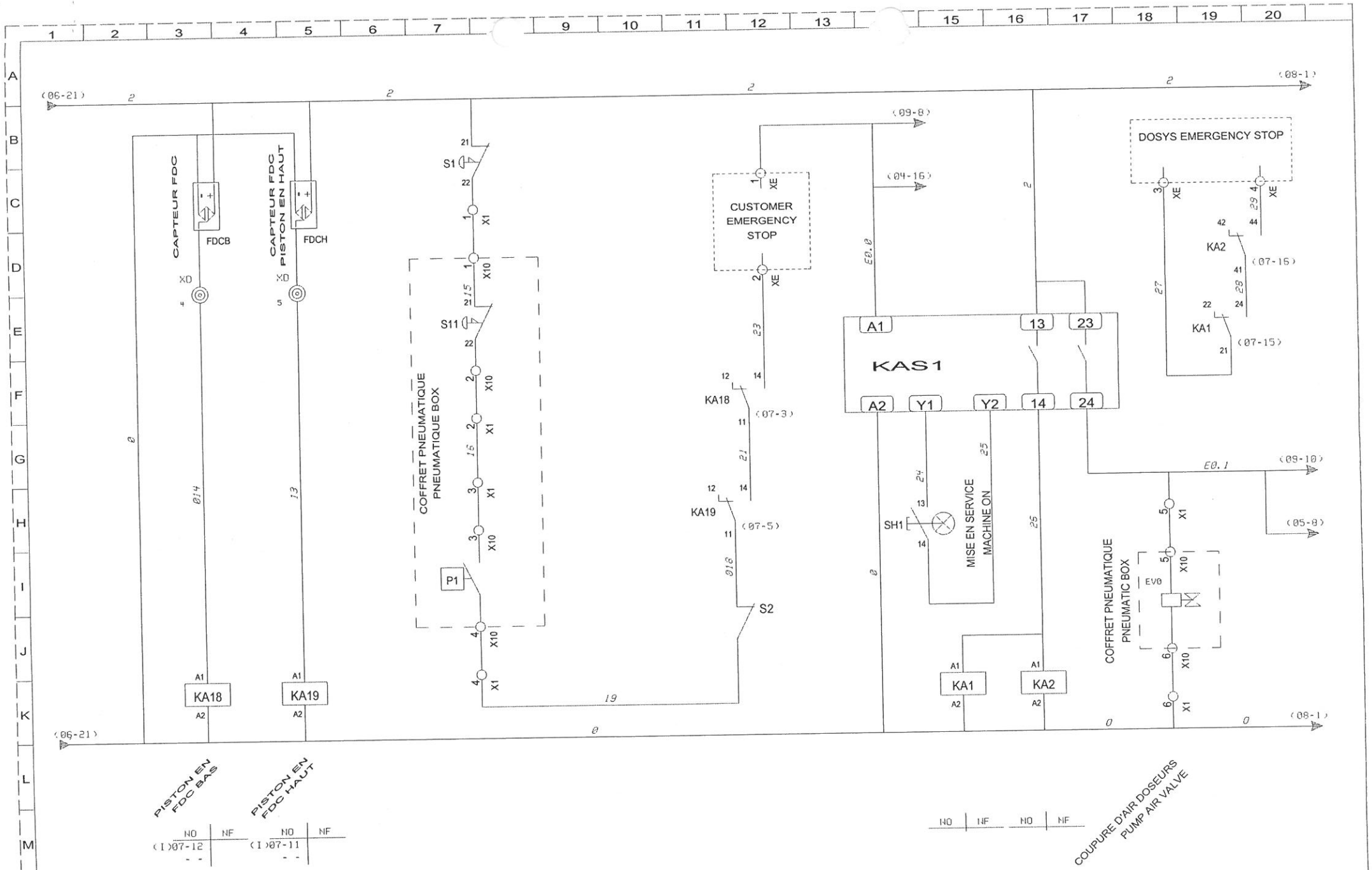

DOSYS Des pompes au process	DESSINE PAR PCM DOSYS	DATE DE CREATION 23/07/2003	TETRA PACK SECURITY	IND	DATE	MODIFICATION	VISA	see WORLDWIDE IGE+XAO	FOLIO: 07
	VERIFIE PAR PCM DOSYS	DATE DE VERIFICATION 07-10-2003							CD057-00

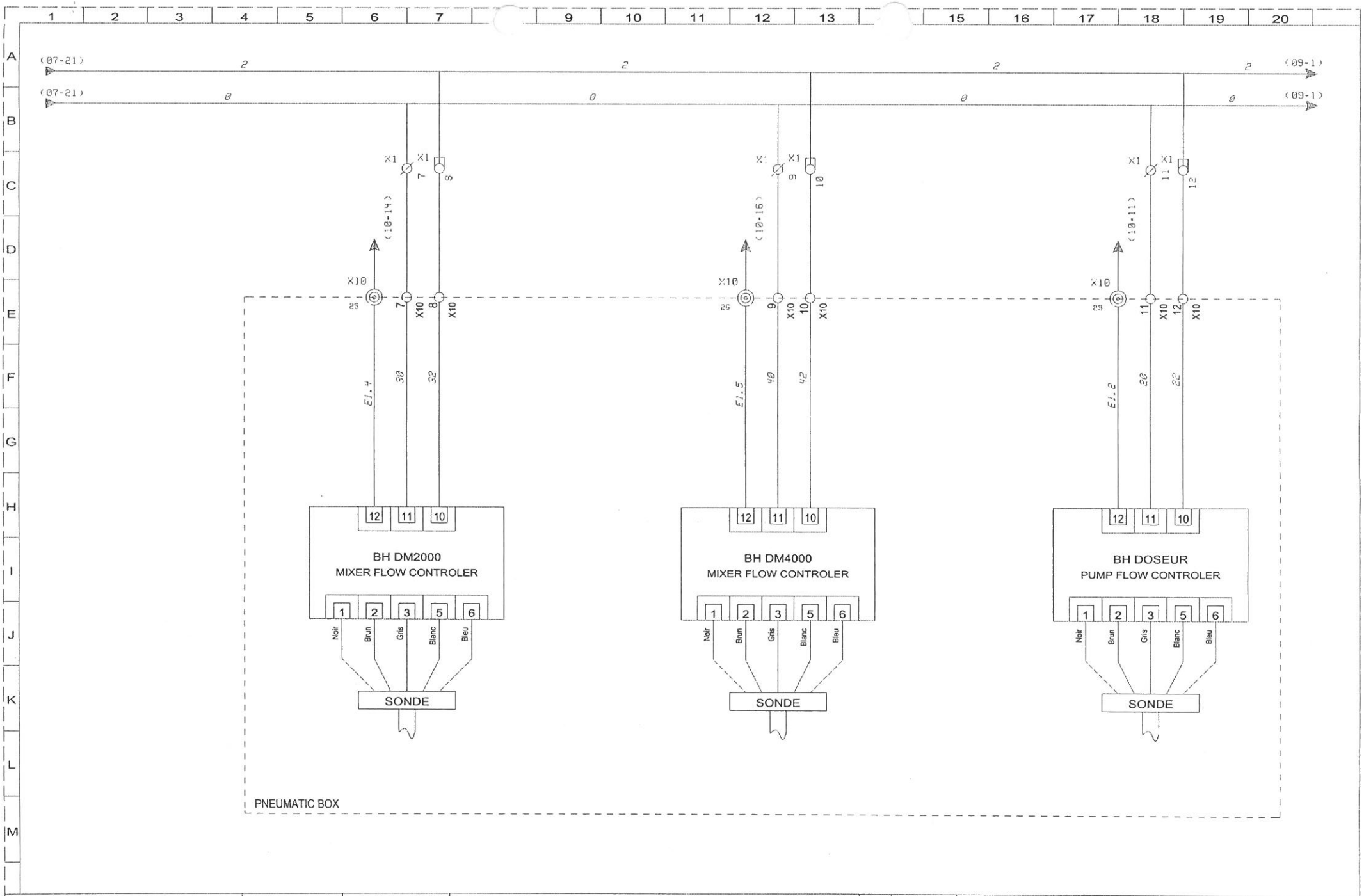

DOSYS Des pompes au process	DESSINE PAR PCM DOSYS	DATE DE CREATION 23/07/2003	TETRA PACK FLOW CONTROLER	IND	DATE	MODIFICATION	VISA	SEC WORLDWIDE IGE+XAO	FOLIO: 08
	VERIFIE PAR PCM DOSYS	DATE DE VERIFICATION 07-10-2003							CD057-00

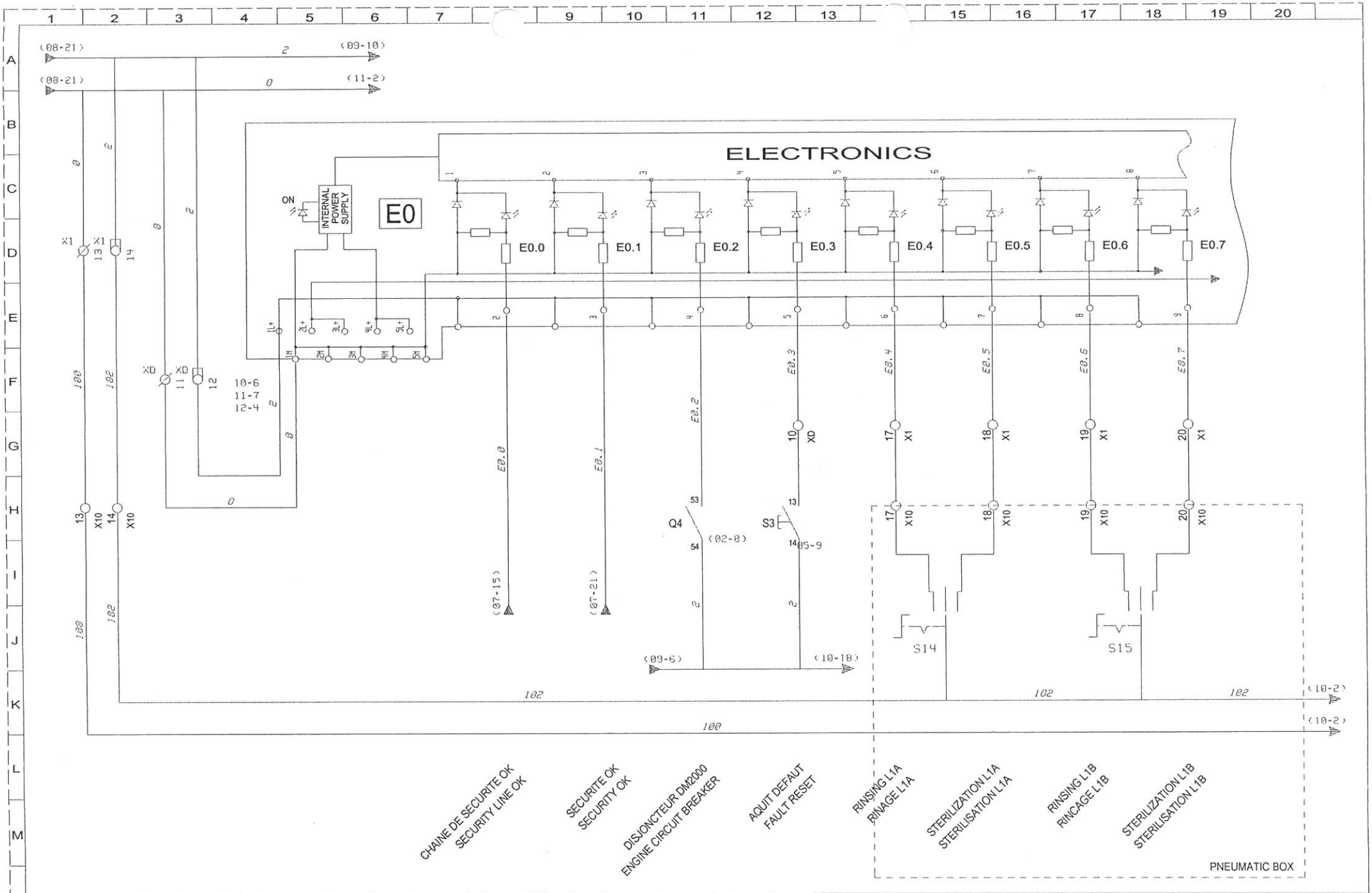

DOSYS Des pompes au process

DESSINE PAR	DATE DE CREATION	TETRA PACK	IND	DATE	MODIFICATION	VISA	see WORLDWIDE IGE+XAO	FOLIO: 09
PCM DOSYS	23/07/2003	inputs E0.0 to E0.7						
VERIFIE PAR	DATE DE VERIFICATION						CD057-00	
PCM DOSYS	07-10-2003							

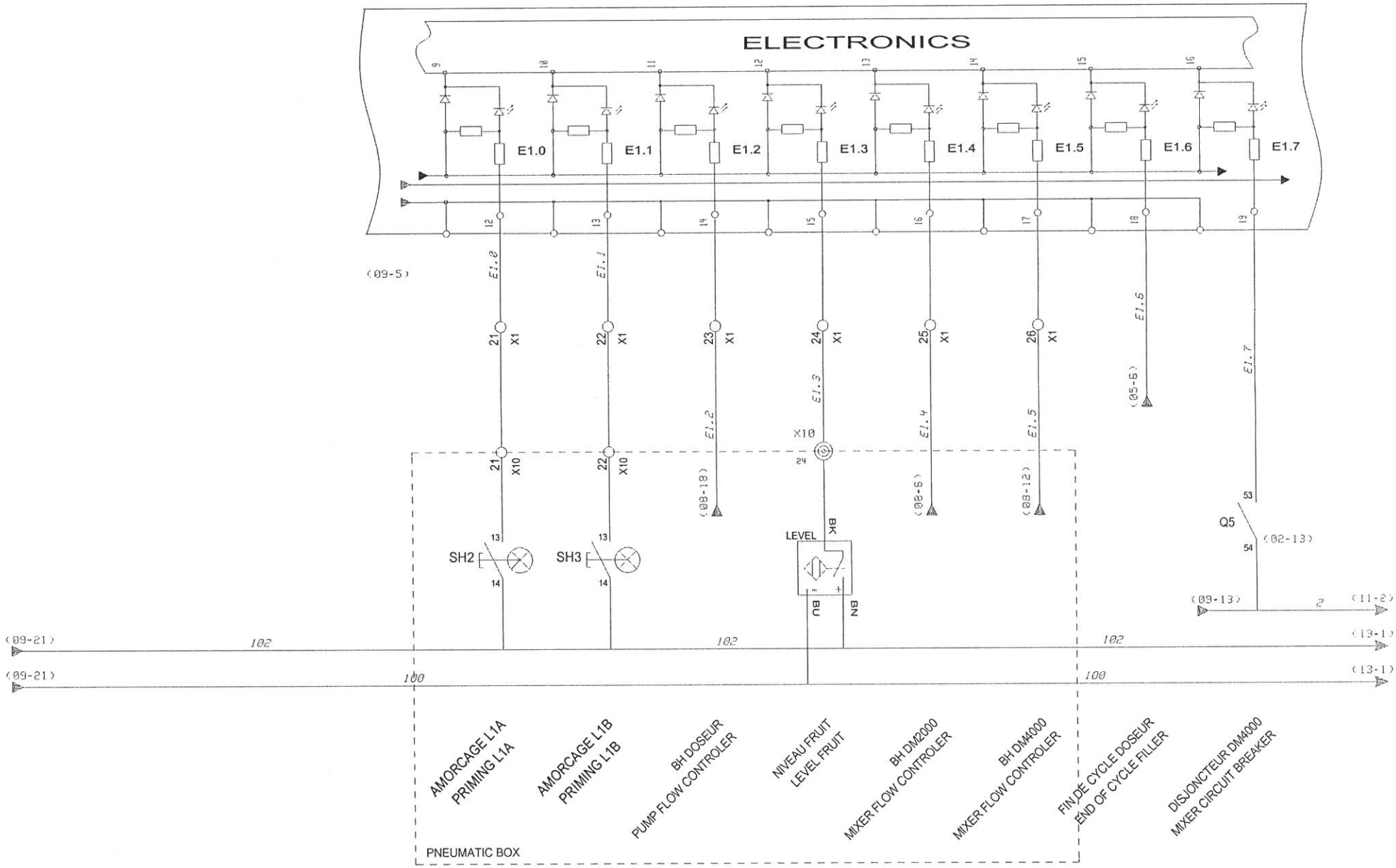

DOSYS Des pompes au process	DESSINE PAR PCM DOSYS	DATE DE CREATION 23/07/2003	TETRA PACK inputs E1.0 to E1.7	IND	DATE	MODIFICATION	VISA	see WORLDWIDE IGE+XAO	FOLIO: 10
	VERIFIE PAR PCM DOSYS	DATE DE VERIFICATION 07-10-2003							CD057-00

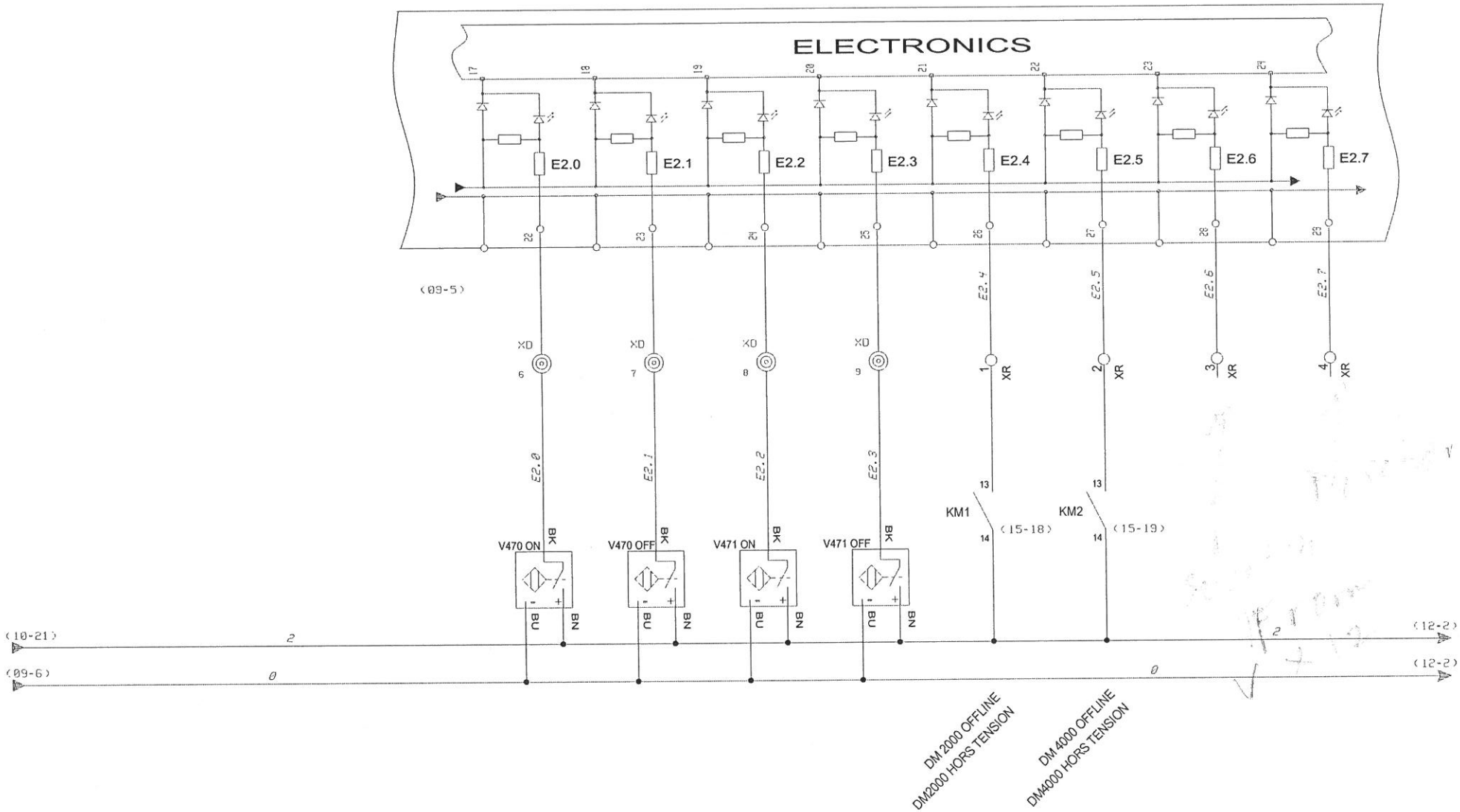

DOSYS Des pompes au process	DESSINE PAR PCM DOSYS	DATE DE CREATION 23/07/2003	TETRA PACK inputs E2.0 to E2.7	IND	DATE	MODIFICATION	VISA	see WORLDWIDE IGE+XAO	FOLIO: 11
	VERIFIE PAR PCM DOSYS	DATE DE VERIFICATION 07-10-2003							CD057-00

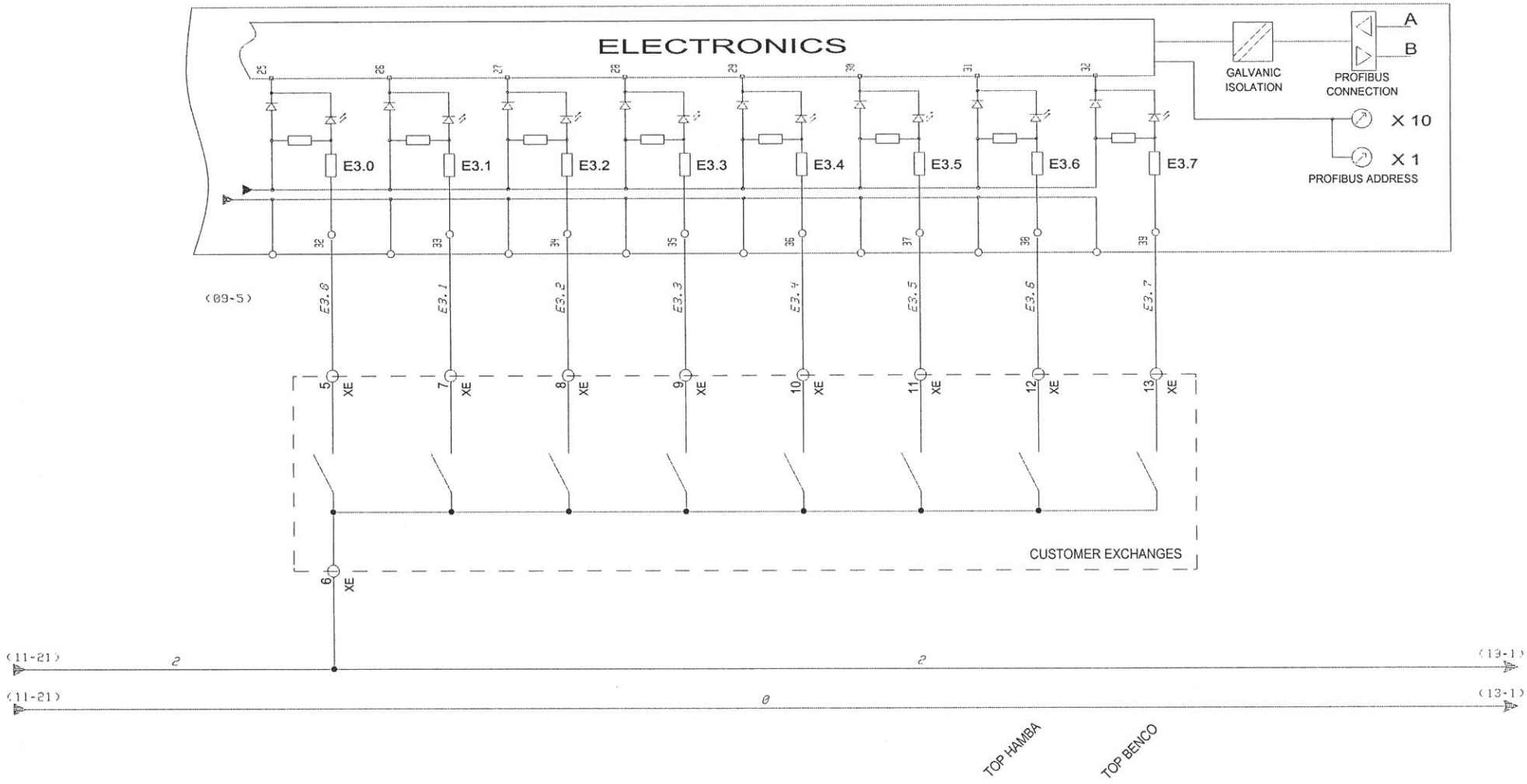

DOSYS Des pompes au process	DESSINE PAR PCM DOSYS	DATE DE CREATION 23/07/2003	TETRA PACK inputs E3.0 to E3.7	IND	DATE	MODIFICATION	VISA	see WORLDWIDE IGE+XAO	FOLIO: 12
	VERIFIE PAR PCM DOSYS	DATE DE VERIFICATION 07-10-2003							CD057-00

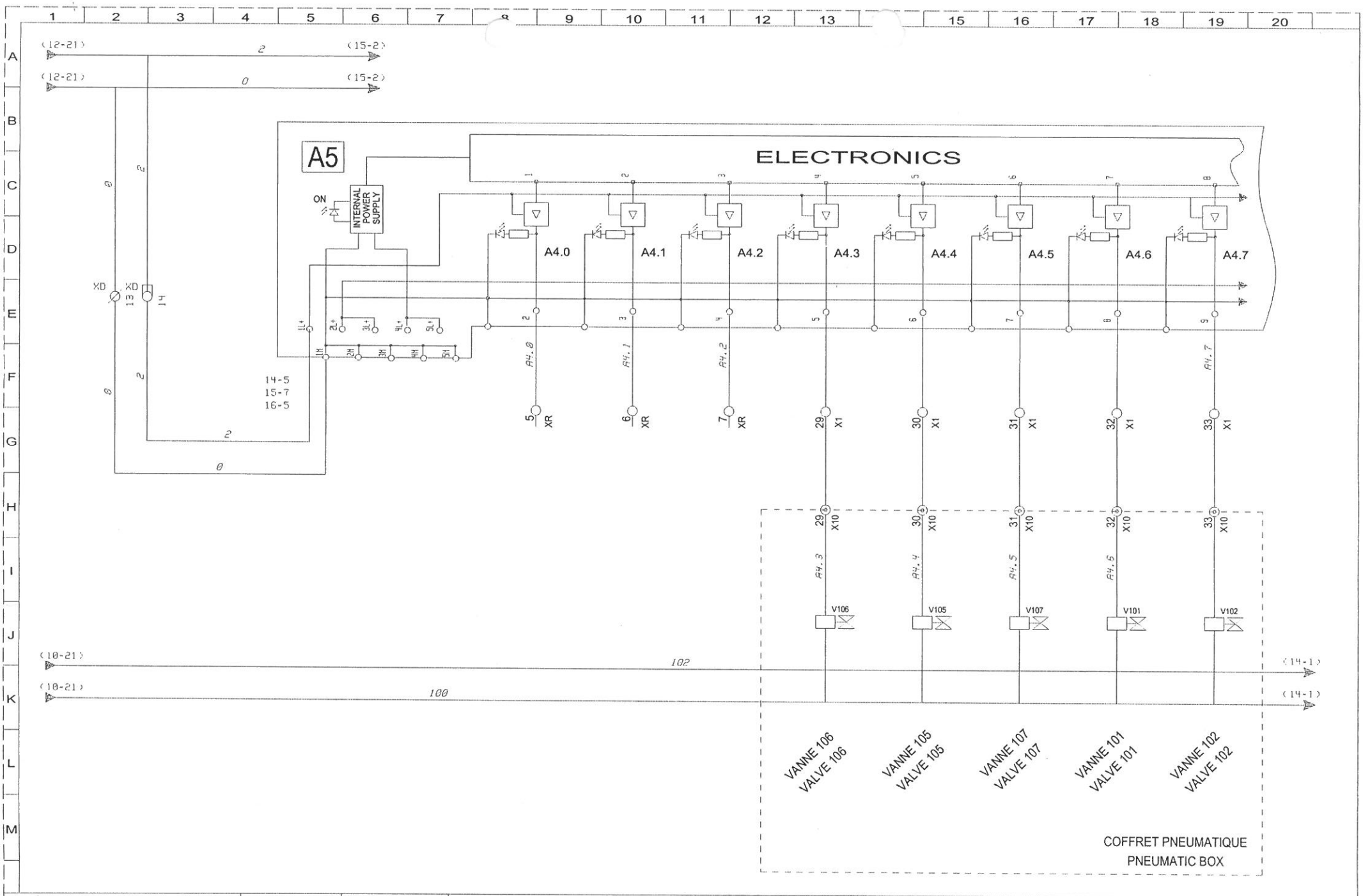

DOSYS Des pompes au process	DESSINE PAR PCM DOSYS	DATE DE CREATION 23/07/2003	TETRA PACK outputs A4.0 to A4.7	IND	DATE	MODIFICATION	VISA	SEE WORLDWIDE IGE+XAO	FOLIO: 13
	VERIFIE PAR PCM DOSYS	DATE DE VERIFICATION 07-10-2003							CD057-00

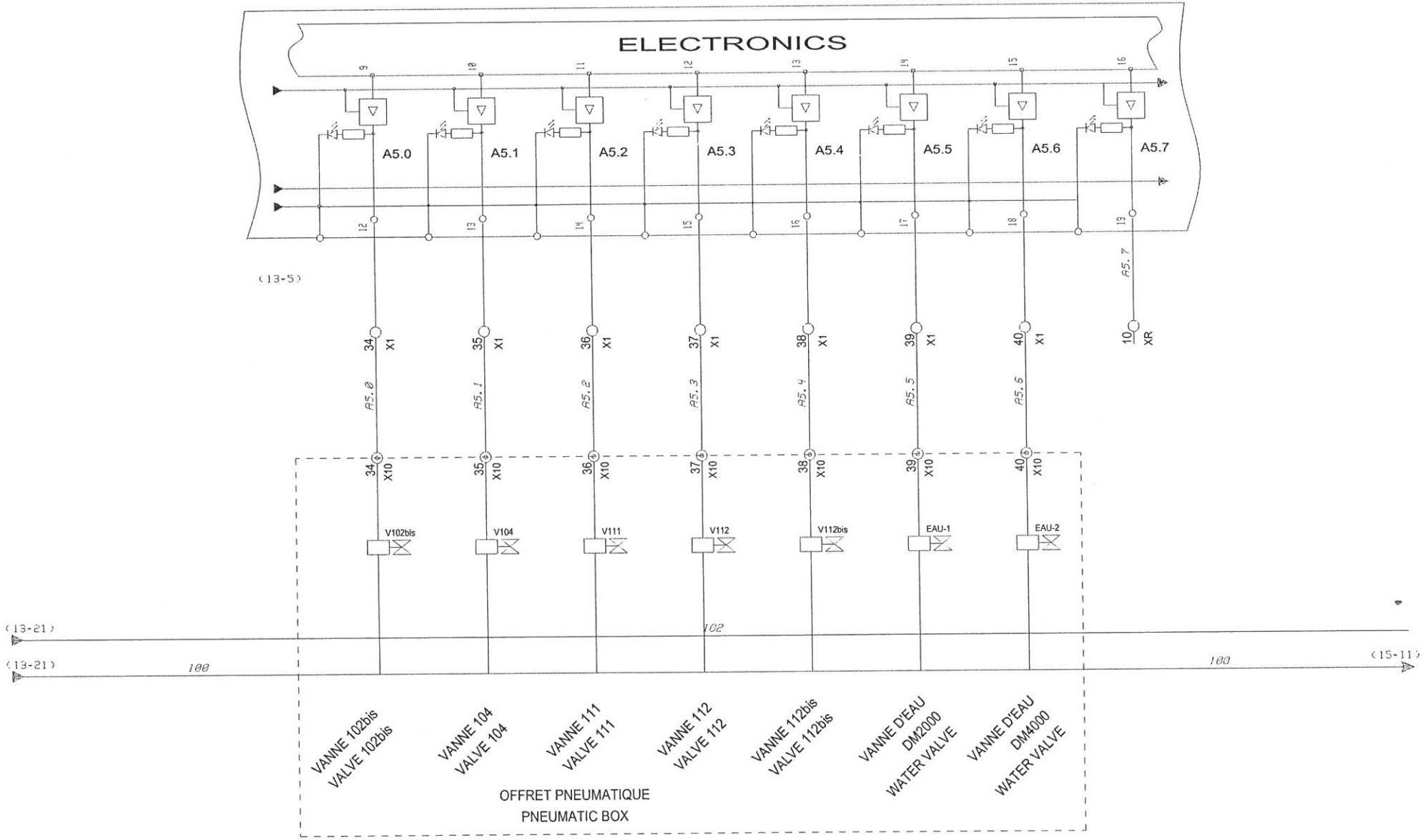

DOSYS Des pompes au process	DESSINE PAR PCM DOSYS	DATE DE CREATION 23/07/2003	TETRA PACK outputs A5.0 to A5.7	IND	DATE	MODIFICATION	VISA	see WORLDWIDE IGE+XAO — FOLIO: 14
	VERIFIE PAR PCM DOSYS	DATE DE VERIFICATION 07-10-2003						CD057-00

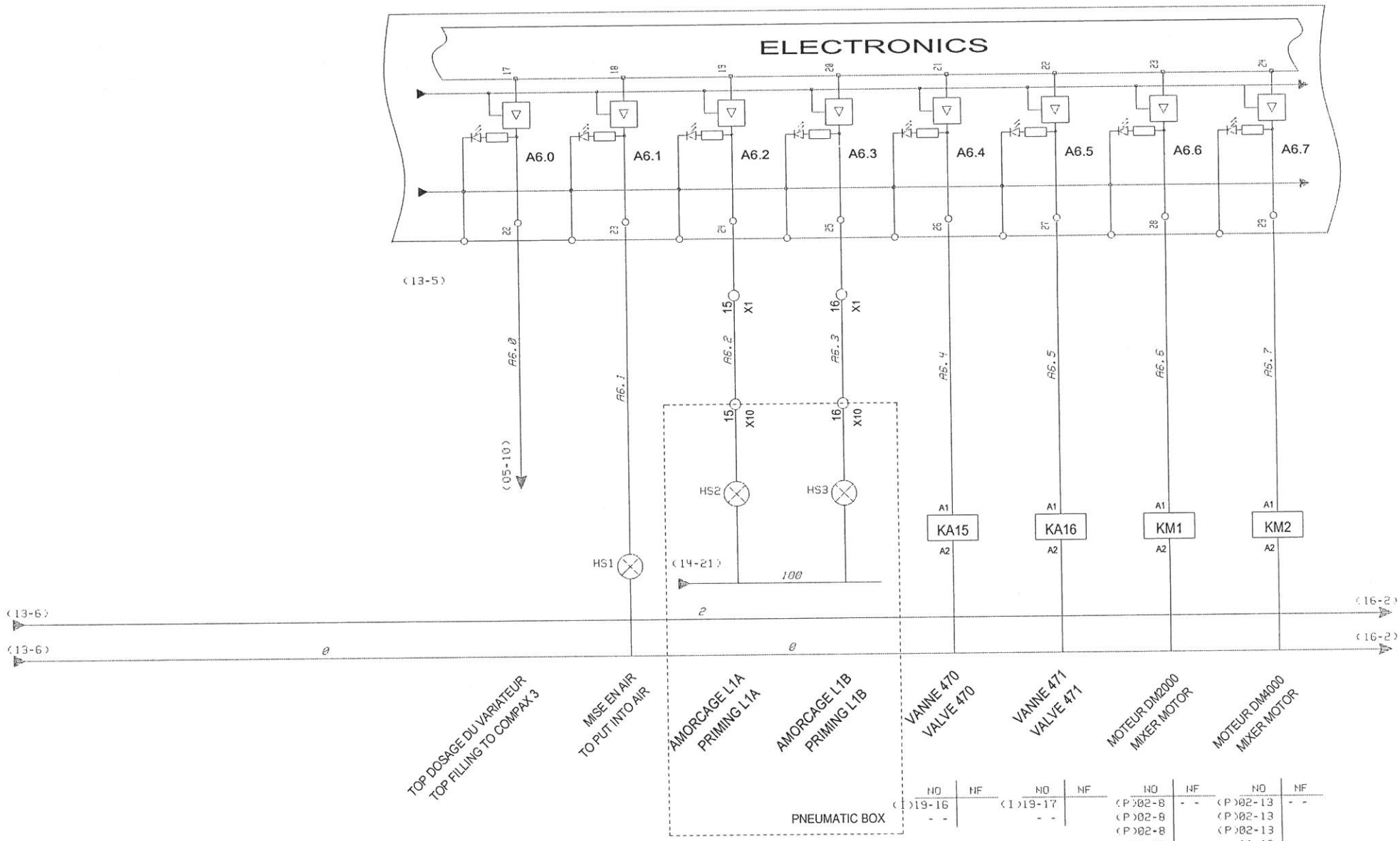

DOSYS Des pompes au process	DESSINE PAR PCM DOSYS	DATE DE CREATION 23/07/2003	TETRA PACK outputs A6.0 to A6.7	IND	DATE	MODIFICATION	VISA	SCC WORLDWIDE IGE+XAO	FOLIO: 15
	VERIFIE PAR PCM DOSYS	DATE DE VERIFICATION 07-10-2003							CD057-00

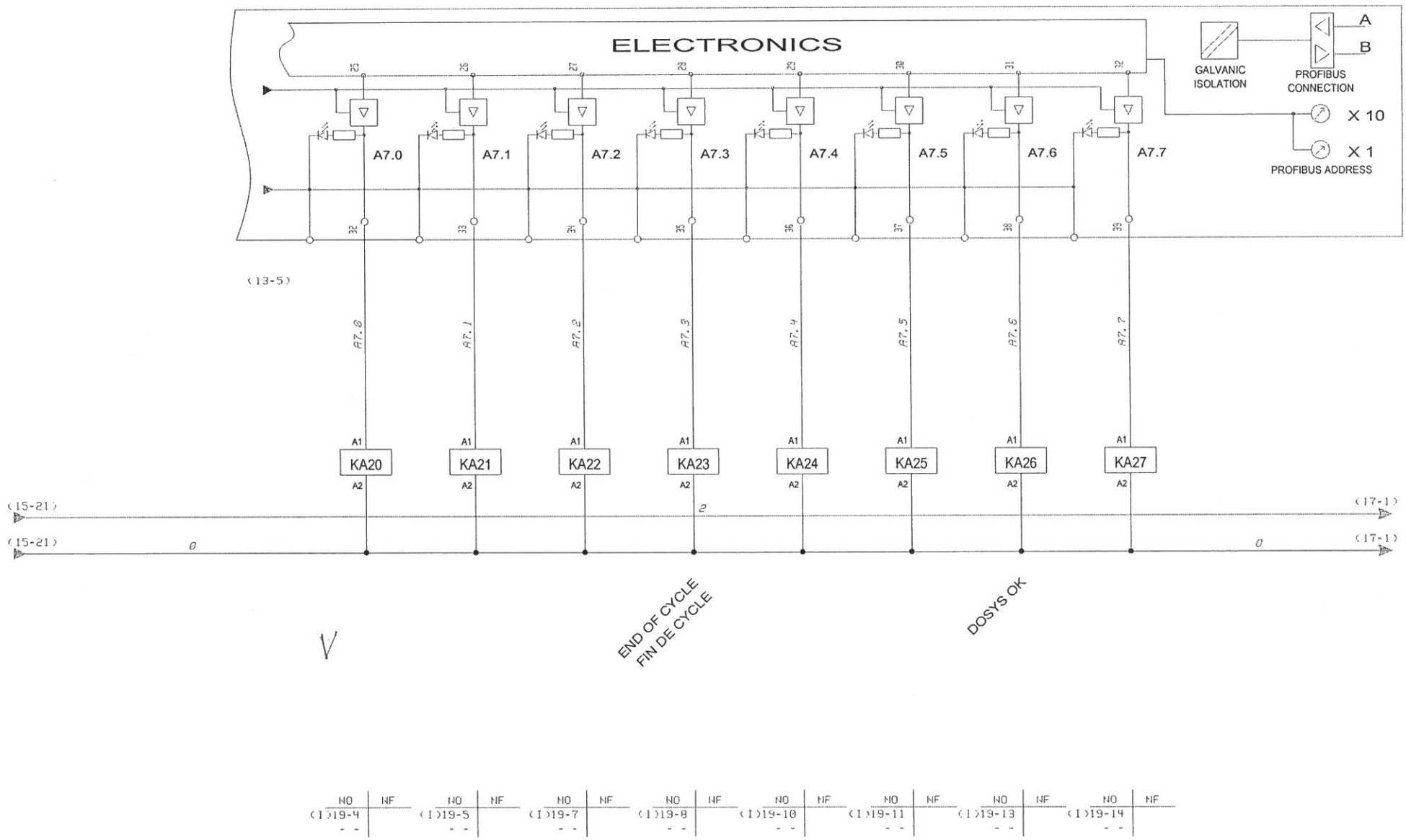

NO	NF	NO	NF	NO	NF	NO	NF	NO	NF	NO	NF	NO	NF	NO	NF
(I)19-4		(I)19-5		(I)19-7		(I)19-8		(I)19-10		(I)19-11		(I)19-13		(I)19-14	
- -		- -		- -		- -		- -		- -		- -		- -	

DOSYS Des pompes au process

DESSINE PAR	DATE DE CREATION
PCM DOSYS	23/07/2003
VERIFIE PAR	DATE DE VERIFICATION
PCM DOSYS	07-10-2003

TETRA PACK
outputs A7.0 to A7.7

IND	DATE	MODIFICATION	VISA

see WORLDWIDE IQE+XAO

FOLIO: 16

CD057-00

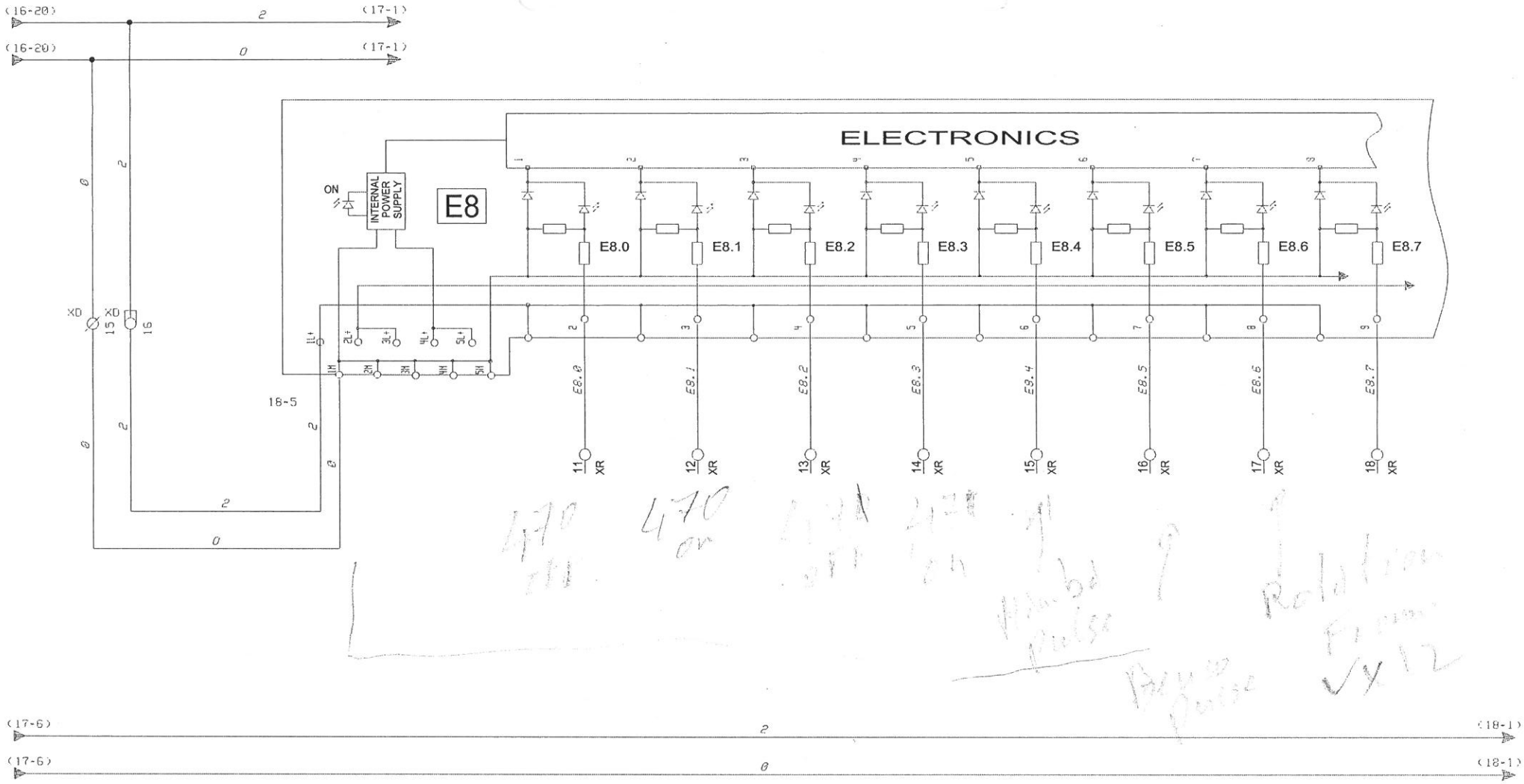

DOSYS Des pompes au process	DESSINE PAR PCM DOSYS	DATE DE CREATION 23/07/2003	TETRA PACK inputs E8.0 to E8.7	IND	DATE	MODIFICATION	VISA	see WORLDWIDE IGE+XAO	FOLIO: 17
	VERIFIE PAR PCM DOSYS	DATE DE VERIFICATION 07-10-2003							CD057-00

ARMOIRE DOSYS

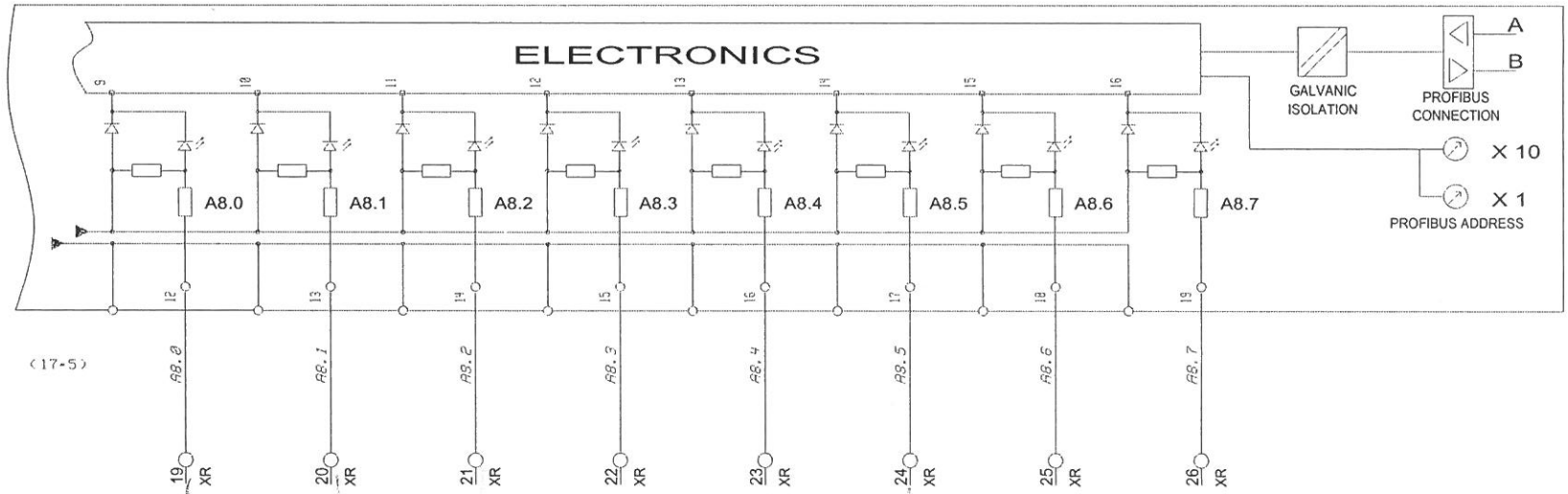

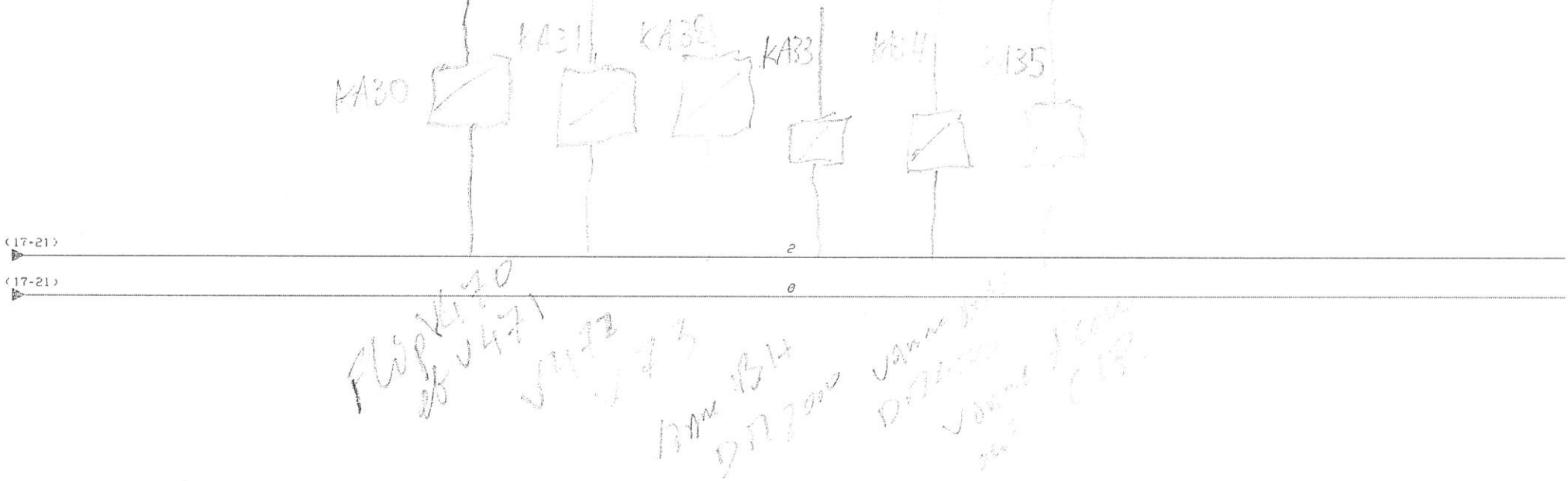

DOSYS Des pompes au process	DESSINE PAR PCM DOSYS	DATE DE CREATION 23/07/2003	TETRA PACK outputs A8.0 to A8.7	IND	DATE	MODIFICATION	VISA	see WORLDWIDE IGE+XAO	FOLIO: 18
	VERIFIE PAR PCM DOSYS	DATE DE VERIFICATION 07-10-2003							CD057-00

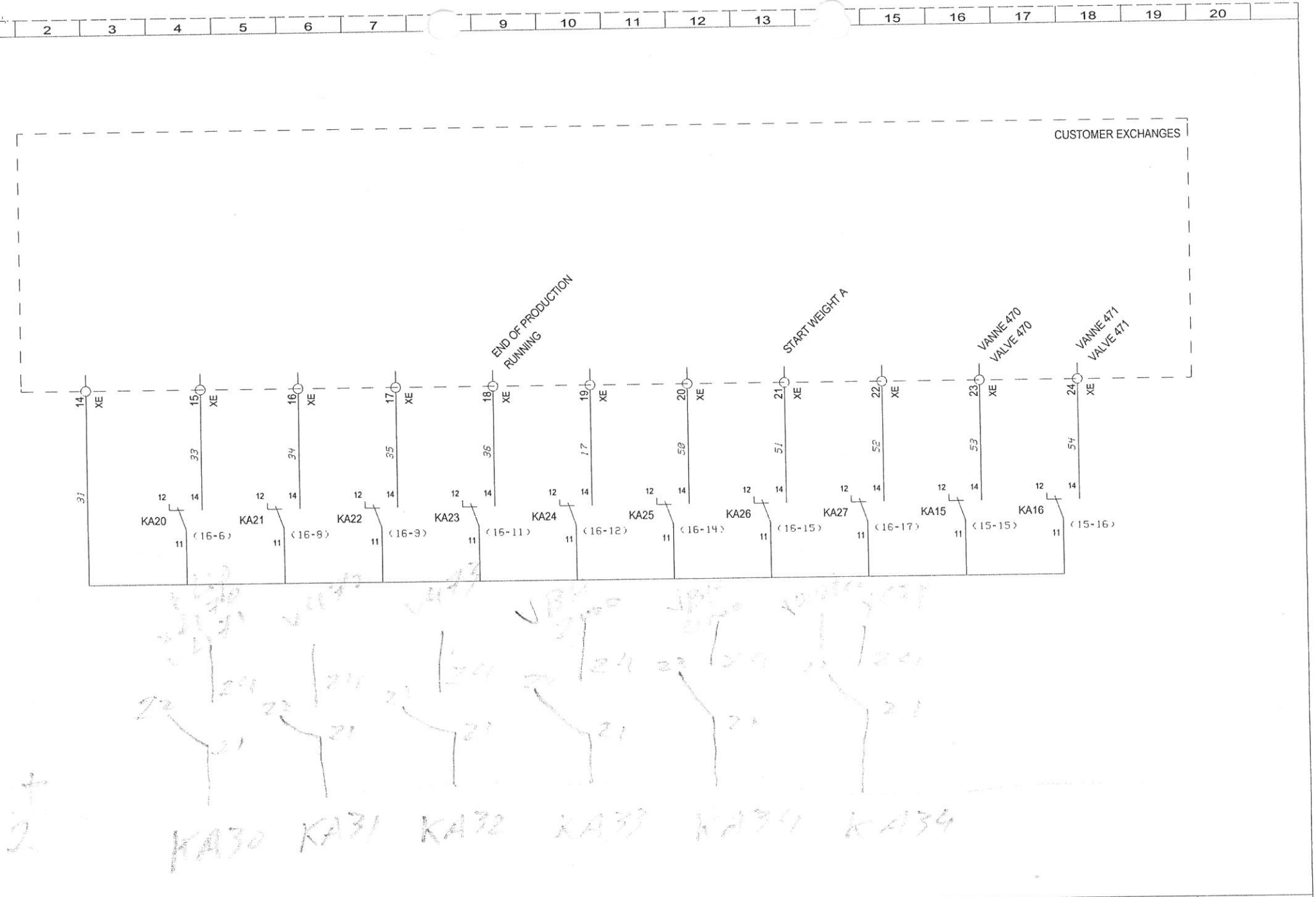

DOSYS Des pompes au process	DESSINE PAR PCM DOSYS	DATE DE CREATION 23/07/2003	TETRA PACK CUSTOMER EXCHANGES	IND	DATE	MODIFICATION	VISA	see WORLDWIDE IGE+XAO	FOLIO: 19
	VERIFIE PAR PCM DOSYS	DATE DE VERIFICATION 07-10-2003							CD057-00

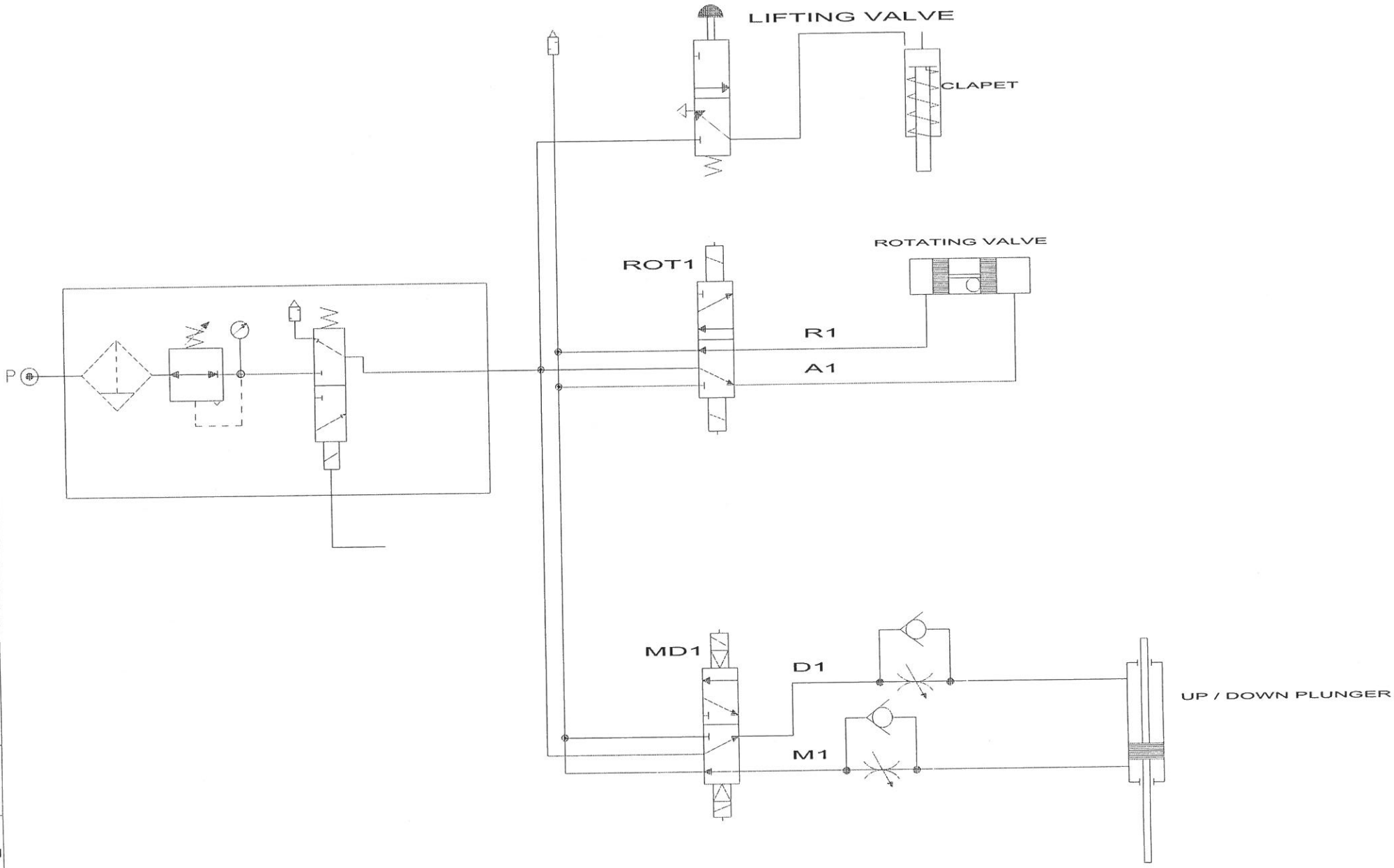

DOSYS Des pompes au process	DESSINE PAR PCM DOSYS	DATE DE CREATION 23/07/2003	TETRA PACK NEUMATIC	IND	DATE	MODIFICATION	VISA	see WORLDWIDE IGE+XAO	FOLIO: 20
	VERIFIE PAR PCM DOSYS	DATE DE VERIFICATION 07-10-2003							CD057-00

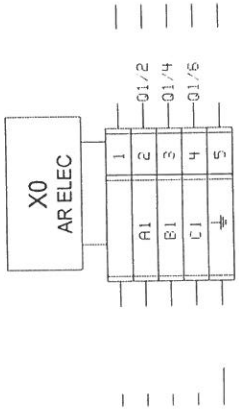

DOSYS Des pompes au process	DESSINE PAR PCM DOSYS	DATE DE CREATION 23/07/2003	TETRA PACK	IND	DATE	MODIFICATION	VISA	see WORLDWIDE IGE+XAO	FOLIO: 21
	VERIFIE PAR PCM DOSYS	DATE DE VERIFICATION 07-10-2003	TERMINAL : X0	A	01-03-2001	LIGNE DE SECURITE			CD057-00

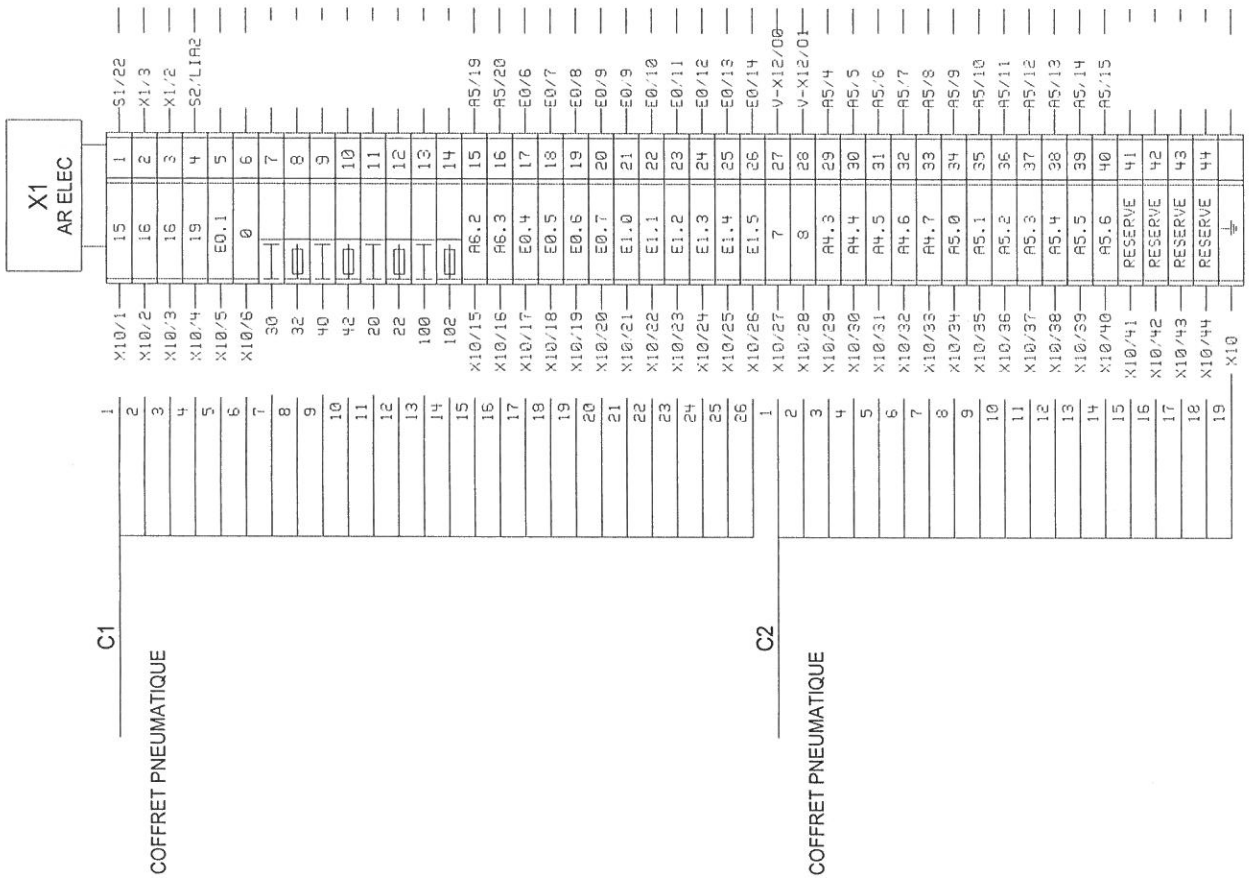

DOSYS Des pompes au process	DESSINE PAR PCM DOSYS	DATE DE CREATION 23/07/2003	TETRA PACK TERMINAL : X1	IND	DATE	MODIFICATION	VISA	see WORLDWIDE IGE+XAO FOLIO: 22
	VERIFIE PAR PCM DOSYS	DATE DE VERIFICATION 07-10-2003		A	01-03-2001	LIGNE DE SECURITE		CD057-00

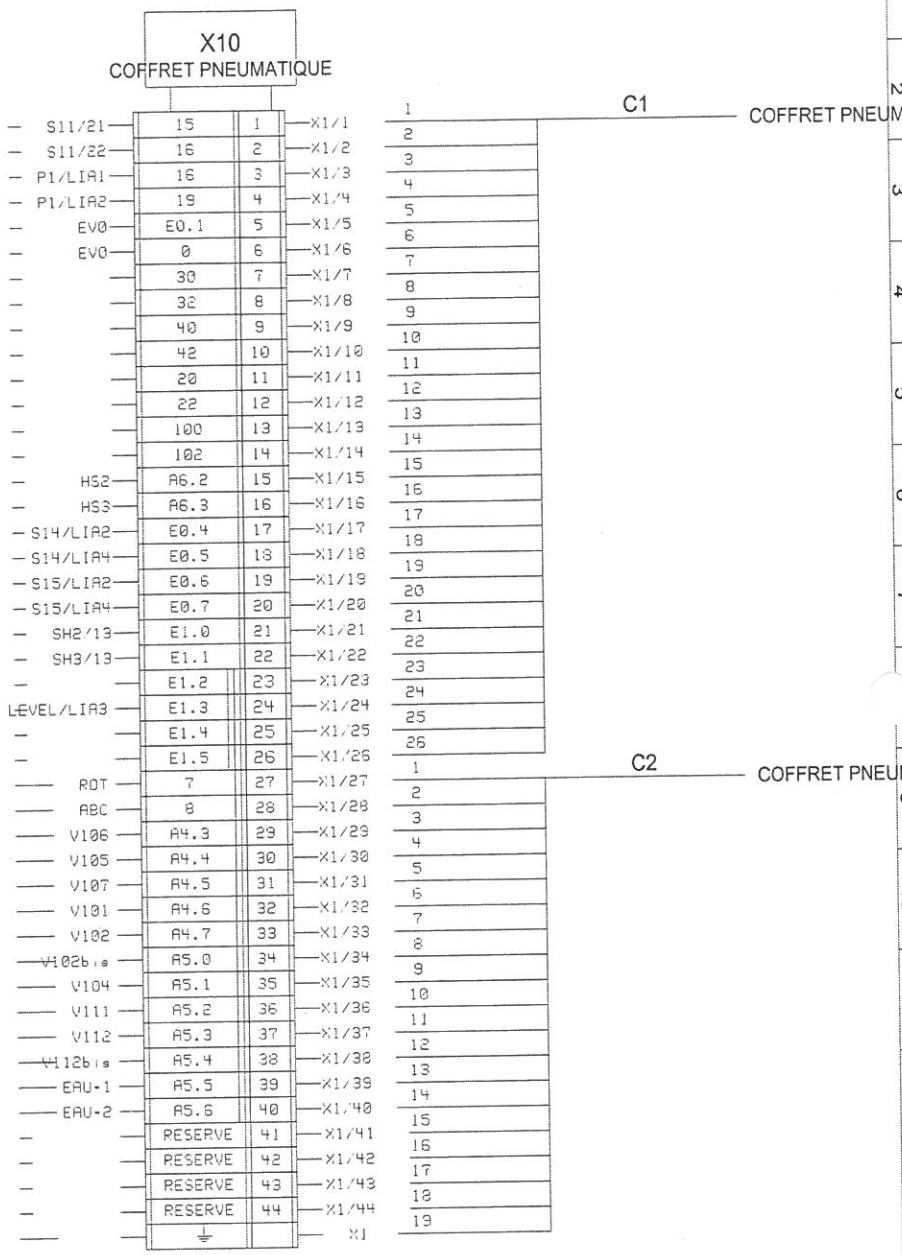

DOSYS Les pompes au process

DESSINE PAR	PCM DOSYS
VERIFIE PAR	PCM DOSYS
DATE DE CREATION	23/07/2003
DATE DE VERIFICATION	07-10-2003

TETRA PACK
TERMINAL : X10

IND	DATE	MODIFICATION	VISA
A	01-03-2001	LIGNE DE SECURITE	

SEE WORLDWIDE IGE+XAO

CD057-00

FOLIO: 23

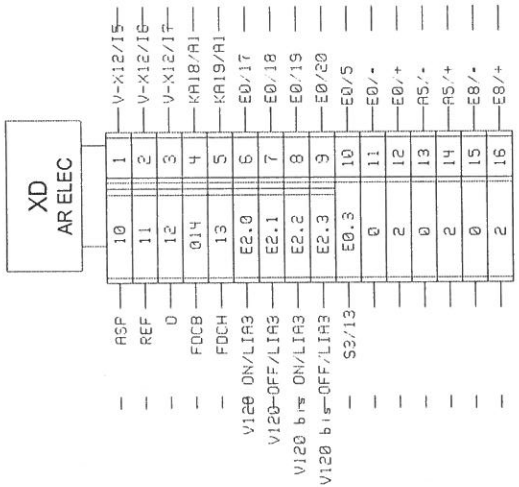

DOSYS Des pompes au process	DESSINE PAR PCM DOSYS	DATE DE CREATION 23/07/2003	TETRA PACK TERMINAL : XD	IND	DATE	MODIFICATION	VISA	see WORLDWIDE IGE+XAO	FOLIO: 24
	VERIFIE PAR PCM DOSYS	DATE DE VERIFICATION 07-10-2003		A	01-03-2001	LIGNE DE SECURITE			CD057-00

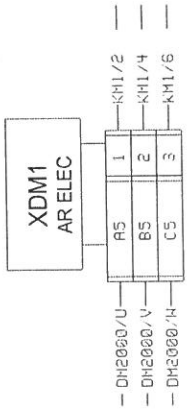

DOSYS Des pompes au process	DESSINE PAR PCM DOSYS	DATE DE CREATION 23/07/2003	TETRA PACK TERMINAL : XDM1	IND	DATE	MODIFICATION	VISA	see WORLDWIDE IGE+XAO	FOLIO: 25
	VERIFIE PAR PCM DOSYS	DATE DE VERIFICATION 07-10-2003		A	01-03-2001	LIGNE DE SECURITE			CD057-00

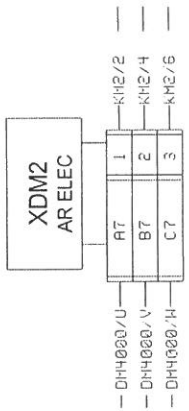

DOSYS Des pompes au process	DESSINE PAR PCM DOSYS	DATE DE CREATION 23/07/2003	TETRA PACK TERMINAL : XDM2	IND	DATE	MODIFICATION	VISA	see WORLDWIDE IGE+XAO	FOLIO: 26
	VERIFIE PAR PCM DOSYS	DATE DE VERIFICATION 07-10-2003		A	01-03-2001	LIGNE DE SECURITE			CD057-00

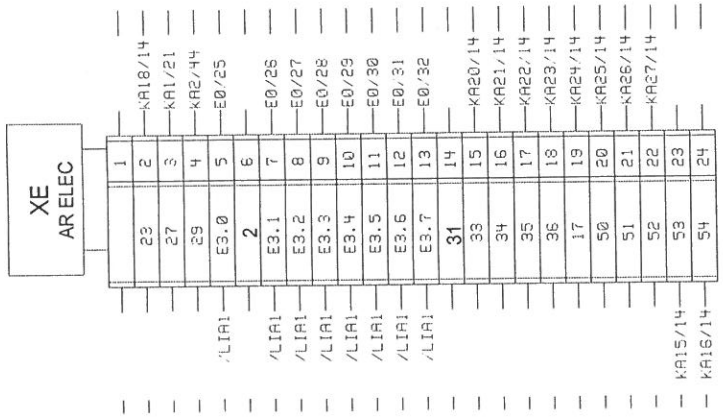

DOSYS Des pompes au process	DESSINE PAR PCM DOSYS	DATE DE CREATION 23/07/2003	TETRA PACK TERMINAL : XE	IND	DATE	MODIFICATION	VISA	see WORLDWIDE IGE+XAO	FOLIO: 27
	VERIFIE PAR PCM DOSYS	DATE DE VERIFICATION 07-10-2003		A	01-03-2001	LIGNE DE SECURITE			CD057-00

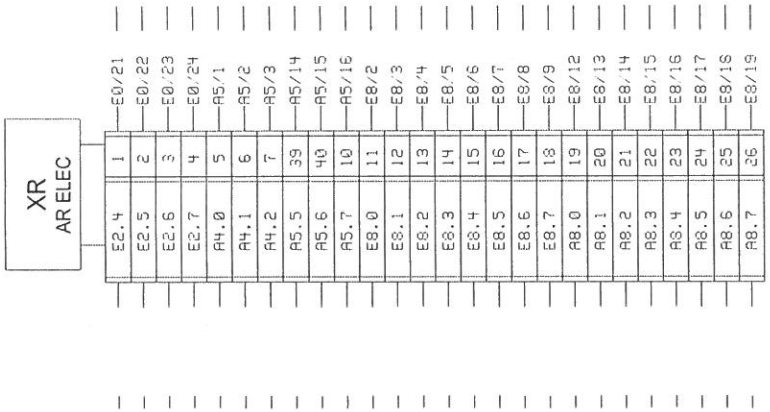

DOSYS Des pompes au process

DESSINE PAR	DATE DE CREATION
PCM DOSYS	23/07/2003
VERIFIE PAR	DATE DE VERIFICATION
PCM DOSYS	07-10-2003

TETRA PACK
TERMINAL : XR

IND	DATE	MODIFICATION	VISA
A	01-03-2001	LIGNE DE SECURITE	

see WORLDWIDE IGE+XAO

FOLIO: 28

CD057-00

FOLIO	REPERE	DESIGNATION	FABRIQUANT	REFERENCE	CODE GPIC
02	Q1	MAIN POWER SUPPLY SWITCH 32A	SCHNEIDER	VCD-1	
02		POLE NEUTRE ADDITIONNEL	SCHNEIDER	VZ-11	ZC4020.000
02	Q2	CIRCUIT BREAKER C60N 4P 25A	MERLIN GERIN	24230	ZP5041.000
02	Q4	ENGINE CIRCUIT BREAKER P25M 1.6 to 2.5 A	MERLIN GERIN	21106	ZP5108.000
02		AUXILIAR CIRCUIT BREAKER CONTACT 1NO + 1NC FOR P25M	MERLIN GERIN	21120	ZP5107.000
02	Q5	ENGINE CIRCUIT BREAKER P25M 4 to 6.3 A	MERLIN GERIN	21108	ZP5106.000
02		AUXILIAR CIRCUIT BREAKER CONTACT 1NO + 1NC FOR P25M	MERLIN GERIN	21120	ZP5107.000
03	PC	SOCKET	LEGRAND	04280	ZC3000.000
03	Q3	DIFFERENCIAL CIRCUIT BREAKER 1A/30mA	MERLIN GERIN	19307	ZP5047.000
03	F3	FUSE CIRCUIT BREAKER STI 1P+N	MERLIN GERIN	15646	ZP1000.000
03		FUSE 10.3*38 1A am	LEGRAND	13001	ZP0021.000
03	M1	FAN	RITTAL	SK3322.100	ZV0010.000
03		FILTRE	RITTAL	SK3322.200	ZV0011.000
03	PLC	PLC CPU-315-2 DP	SIEMENS	6ES7 315-2AG10-0AB0	ZA2295.000
03	CPU 315 - DP	POWER SUPPLY PS 307 120/230V 2A	SIEMENS	6ES7 307-1BA00-0AA0	ZA2219.000
03		BATTERY	SIEMENS	6ES7 971-1AA00-OAAO	ZA2220.000
03		FLASH EEPROM MEMORY 64 Ko	SIEMENS	6ES7 953-8LF00-0AA0	ZA2290.000
03		PLC ACCESSORIE	SIEMENS	6ES7 390 1AE80 OAAO	ZA2251.000
03		ETHERNET INTERFACE CP 343-1	SIEMENS	6GK7 343-1EX11-0XE0	ZA2261.000
03	F4	FUSE CIRCUIT BREAKER STI 1P+N	MERLIN GERIN	15646	ZP1000.000
03		FUSE 10.3*38 2A Gg	LEGRAND	13302	ZP0012.000
03	F5	FUSE CIRCUIT BREAKER STI 1P+N	MERLIN GERIN	15646	ZP1000.000
03		FUSE 10.3*38 2A Gg	LEGRAND	13302	ZP0012.000
03	T1	24V DC POWER SUPPLY 5A	EUROGI	EAGMLE0524-E000302	ZA5035.000
03	F2	FUSE CIRCUIT BREAKER STI 2P	MERLIN GERIN	15651	ZP1002.000
03	TP170	OPERATOR DISPLAY TP170B	SIEMENS	6AV6 545-0BC15-2AX0	ZA2224.000
03		PROFIBUS CONNECTOR	SIEMENS	6ES7 972-0BB40-0XA0	ZA2230.000
03	H1	HEAD OF WIHTE LIGHT	SCHNEIDER	ZB4-BV01	ZC0600.000
03		BODY OF INDICATOR WITHOUT LAMP	SCHNEIDER	ZB4-BV6	ZC0610.000
03	F6	FUSE CIRCUIT BREAKER STI 1P+N	MERLIN GERIN	15646	ZP1000.000
03		FUSE 10.3*38 4A Gg	LEGRAND	13304	ZP0013.000
04	Q6	CIRCUIT BREAKER C60N 2P type D 10A	MERLIN GERIN	24586	ZP5046.000
07	KA18	2 CONTACTS AUXILIARY RELAY	FINDER	40529024	ZR0211.000

FOLIO	REPERE	DESIGNATION	FABRIQUANT	REFERENCE	CODE GPIC
07		AUXILIARY RELAY INTERFACE	FINDER	95.75	ZR0210.000
07	KA19	2 CONTACTS AUXILIARY RELAY	FINDER	40529024	ZR0211.000
07		AUXILIARY RELAY INTERFACE	FINDER	95.75	ZR0210.000
07	S1	PUSCH-PULL EMERGENCY STOP BUTTON	SCHNEIDER	XB4-BT42	ZC0550.000
07		TAG "EMERGENCY STOP"	SCHNEIDER	ZB2-BY8330	ZC0548.000
07	S11	PUSCH-PULL EMERGENCY STOP BUTTON	SCHNEIDER	XB4-BT42	ZC0550.000
07		TAG "EMERGENCY STOP"	SCHNEIDER	ZB2-BY8330	ZC0548.000
07	KAS1	SECURITY RELAY	SCHNEIDER	XPSAL5110	ZR0075.000
07	SH1	BLUE LIGHT PUSH BUTTON	SCHNEIDER	ZB4-BW36	ZC0712.000
07		COMPLETE BODY PUSH BUTTON	SCHNEIDER	ZB4-BW061	ZC0712.000
07	KA1	4 CONTACTS AUXILIARY RELAY	SCHNEIDER	RXN-41G12BD	ZR0002.000
07	KA2	4 CONTACTS AUXILIARY RELAY	SCHNEIDER	RXN-41G12BD	ZR0002.000
09	E0	32 INPUTS 24Vdc INTERFACE	SIEMENS	6ES7 321-1BL00-OAAO	ZA2264.000
09		FRONTAL CONNECTOR FOR 40 POINTS I/O CARD	SIEMENS	6ES7 922-3BF00-0AC0	ZA2266.000
09	S3	BLUE PUSH BUTTON	SCHNEIDER	XB4BA61	ZC0706.000
09			SCHNEIDER	ZBE 101	ZC0515.000
09	S14	3 POSITIONS SWITCH	SCHNEIDER	XB4-BD33	ZC0519.000
09	S15	3 POSITIONS SWITCH	SCHNEIDER	XB4-BD33	ZC0519.000
10	SH2	GREEN HEAD PUSH BUTTON	SCHNEIDER	ZB4-BW33	ZC0501.000
10		COMPLETE BODY PUSH BUTTON	SCHNEIDER	ZB4-BW061	ZC0712.000
10	SH3	GREEN HEAD PUSH BUTTON	SCHNEIDER	ZB4-BW33	ZC0501.000
10		COMPLETE BODY PUSH BUTTON	SCHNEIDER	ZB4-BW061	ZC0712.000
13	A5	32 INPUTS 24Vdc INTERFACE	SIEMENS	6ES7 321-1BL00-OAAO	ZA2264.000
13		FRONTAL CONNECTOR FOR 40 POINTS I/O CARD	SIEMENS	6ES7 922-3BF00-0AC0	ZA2266.000
15	KA15	2 CONTACTS AUXILIARY RELAY	FINDER	40529024	ZR0211.000
15		AUXILIARY RELAY INTERFACE	FINDER	95.75	ZR0210.000
15	KA16	2 CONTACTS AUXILIARY RELAY	FINDER	40529024	ZR0211.000
15		AUXILIARY RELAY INTERFACE	FINDER	95.75	ZR0210.000
15	KM1	ENGINE CONTACTOR 9 A 24Vdc	SCHNEIDER	LC1D09BD	ZP6006.000
15	KM2	ENGINE CONTACTOR 9 A 24Vdc	SCHNEIDER	LC1D09BD	ZP6006.000
16	KA20	2 CONTACTS AUXILIARY RELAY	FINDER	40529024	ZR0211.000
16		AUXILIARY RELAY INTERFACE	FINDER	95.75	ZR0210.000
16	KA21	2 CONTACTS AUXILIARY RELAY	FINDER	40529024	ZR0211.000

FOLIO	REPERE	DESIGNATION	FABRIQUANT	REFERENCE	CODE GPIC
16		AUXILIARY RELAY INTERFACE	FINDER	95.75	ZR0210.000
16	KA22	2 CONTACTS AUXILIARY RELAY	FINDER	40529024	ZR0211.000
16		AUXILIARY RELAY INTERFACE	FINDER	95.75	ZR0210.000
16	KA23	2 CONTACTS AUXILIARY RELAY	FINDER	40529024	ZR0211.000
16		AUXILIARY RELAY INTERFACE	FINDER	95.75	ZR0210.000
16	KA24	2 CONTACTS AUXILIARY RELAY	FINDER	40529024	ZR0211.000
16		AUXILIARY RELAY INTERFACE	FINDER	95.75	ZR0210.000
16	KA25	2 CONTACTS AUXILIARY RELAY	FINDER	40529024	ZR0211.000
16		AUXILIARY RELAY INTERFACE	FINDER	95.75	ZR0210.000
16	KA26	2 CONTACTS AUXILIARY RELAY	FINDER	40529024	ZR0211.000
16		AUXILIARY RELAY INTERFACE	FINDER	95.75	ZR0210.000
16	KA27	2 CONTACTS AUXILIARY RELAY	FINDER	40529024	ZR0211.000
16		AUXILIARY RELAY INTERFACE	FINDER	95.75	ZR0210.000
17	E8	16 INPUTS 24Vdc INTERFACE	SIEMENS	6ES7 321-1BH01-0AA0	ZA2275.000
17		FRONTAL CONNECTOR FOR 20 POINTS I/O CARD	SIEMENS	6ES7 922-3BF00-0AB0	ZA2267.000

DOSYS

Des pompes au process

MAINTENANCE DOSEUR TYPE
MAINTENANCE OF METERING UNIT TYPE
MAINTENIMIENTO DEL DOSIFICADOR DE TIPO
WARTUNG STANDARD-DOSIERVORRICHTUNG

DACC

CE

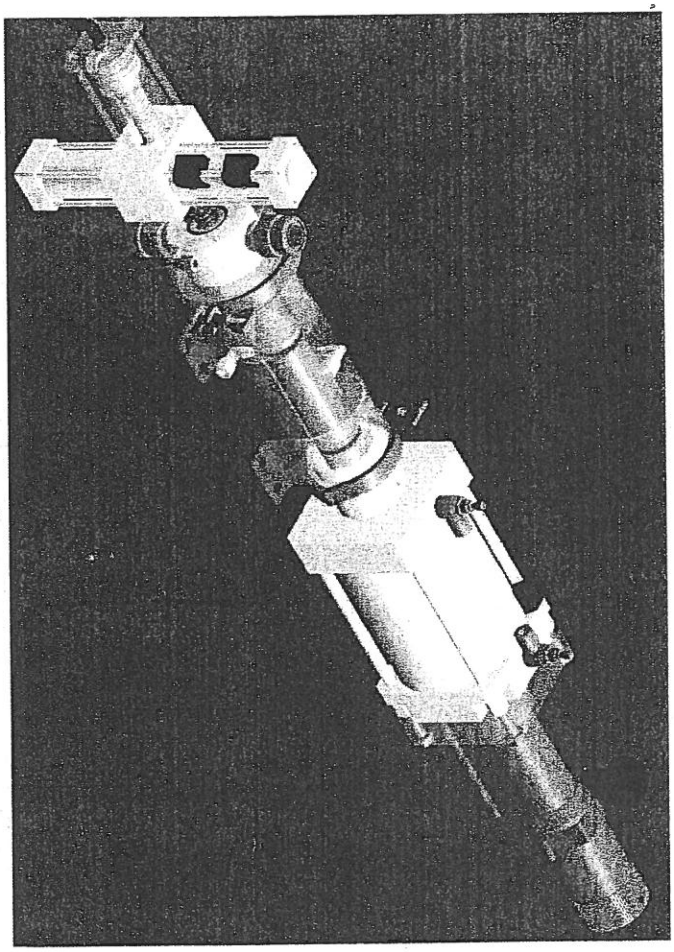

Maintenance de la tête
Maintenance of the head
Mantenimiento del cabeza
Wartung des Kopfes

Maintenance du piston
Maintenance of the piston
Mantenimiento del piston
Wartung des Kolbens

Maintenance du système de réglage
Maintenance of the sytem of adjustment
Mantenimiento del sistema de regulatcion
Wartung des Regulierungssystems

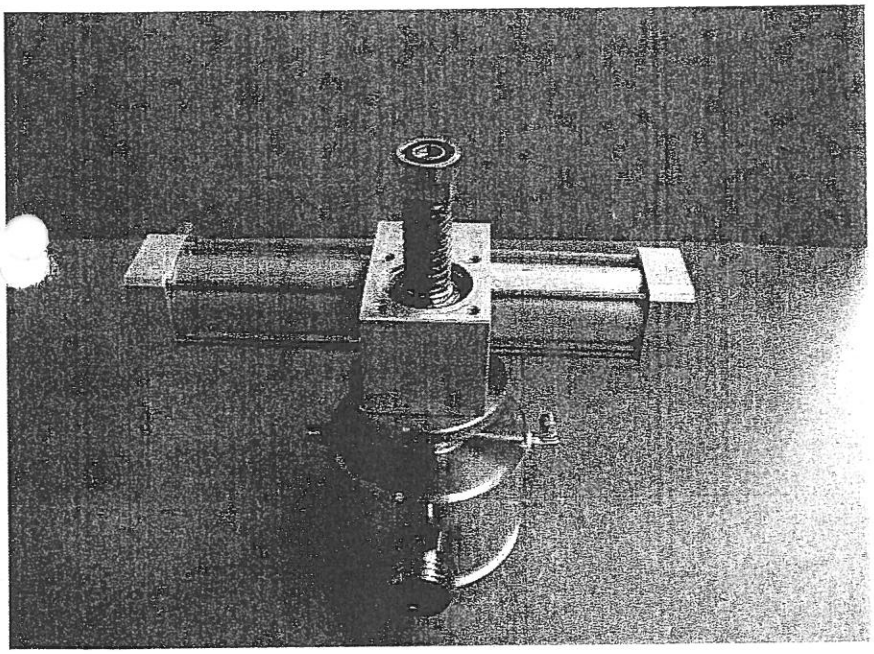

Maintenance de la tête

Maintenance of the head

Mantenimiento del cabeza

Wartung des Kopfes

Déposer le collier clamp.
To deposit the necklace clamp.
Aflojar la brida por encima del gato.
Den Clamp-Ring abnehmen.

Dégager la tête de la chemise.
To release the head of the cylinderet.
Desaflojar la cabeza del dosificador hacia alto
Den Kopf vom Mantel abnehmen.

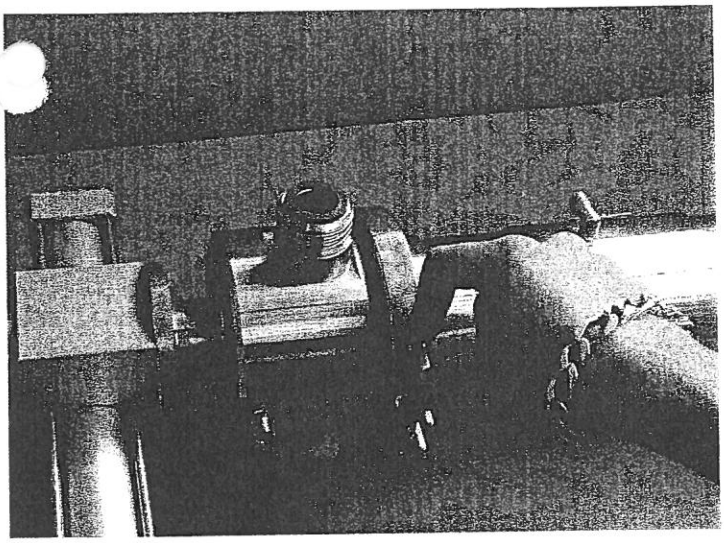

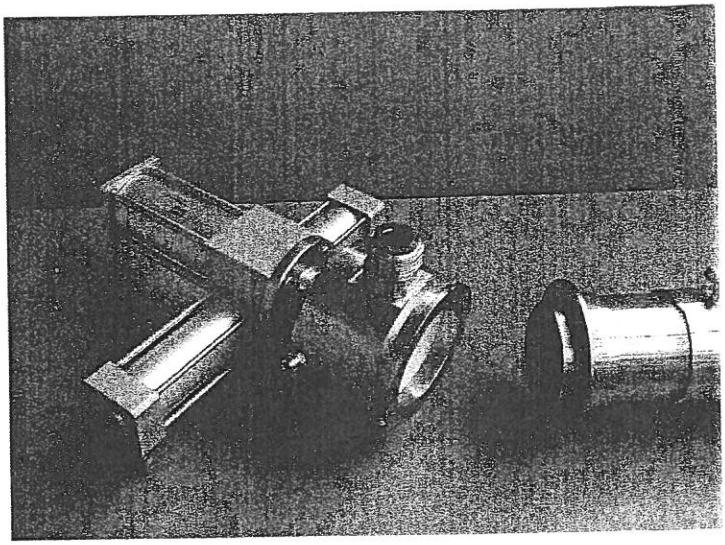

Dévisser les 4 vis du vérin pneumatique d'abbaissage clapet.

To unscrew 4 screws of the pneumatic cylinder of lifting valve.

Desatornillar los 4 tornillos del gato de descento clapeta.

Die 4 Schrauben des Druckzylinders der Klappensenkung abschrauben.

Déposer le vérin pneumatique.

To deposit the pneumatic cylinder.

Deponer el gato.

Den Druckzylinder abnehmen.

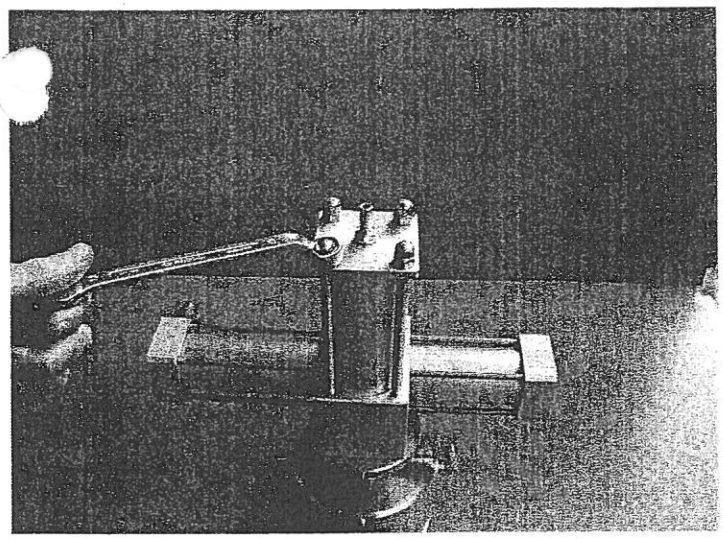

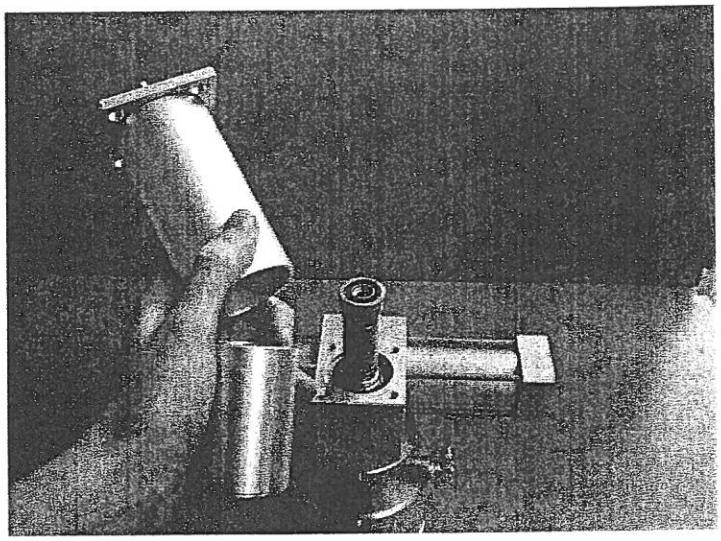

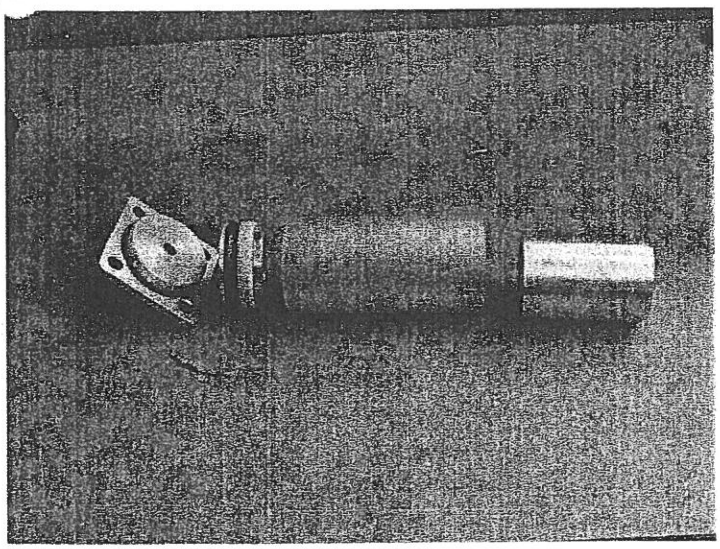

Déposer le piston du vérin d'abbaissage clapet.

To deposit the piston of the cylinder of the lifting valve.

Deponer el piston del gato de descenso clapeta.

Den Kolben des Zylinders der Klappensenkung abnehmen.

Tête de doseur.

Head of filler.

Conjunto de la cabeza con el sistema de retroceso de la clapeta

Dosierkopf

Déblocage de l'écrou de précontrainte.

Unblanking of the nut of constraint.

Debloquear la tuerca de contencion previa del resorte.

Öffnen der Vorspannungsmutter.

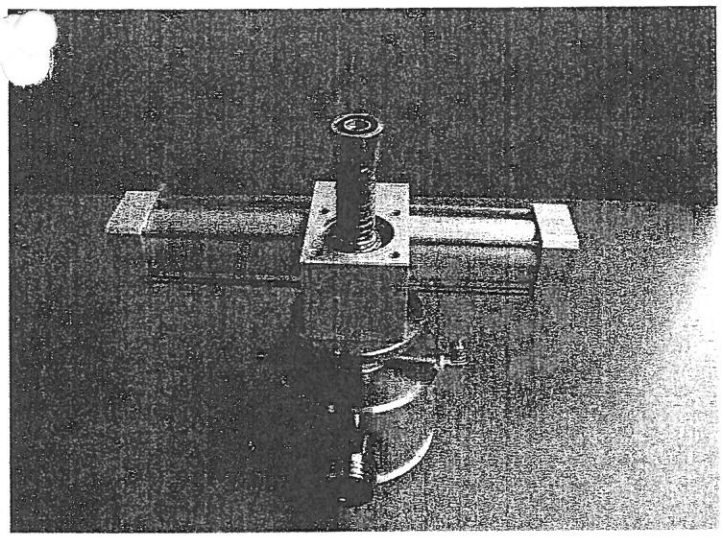

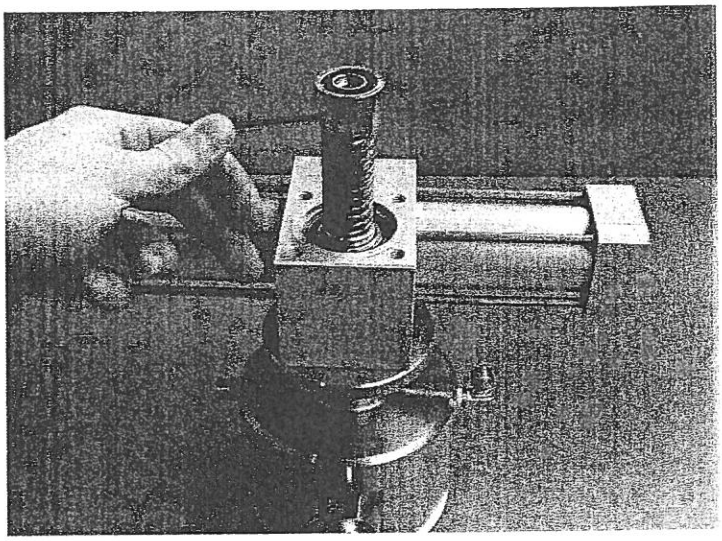

Dévisser l'écrou de contrainte.
To unscrew the nut of constraint.
Aflojar la tuerca de contencion previa.
Spannungsmutter aufschrauben.

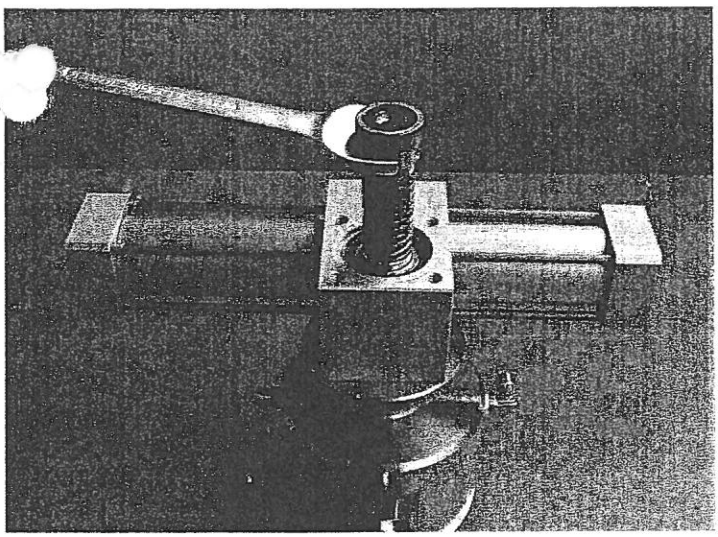

Dégager le ressort et l'écrou.
To release the spring and the nut.
Desaflojar el resorte y la tuerca.
Die Feder und die Mutter abnehmen.

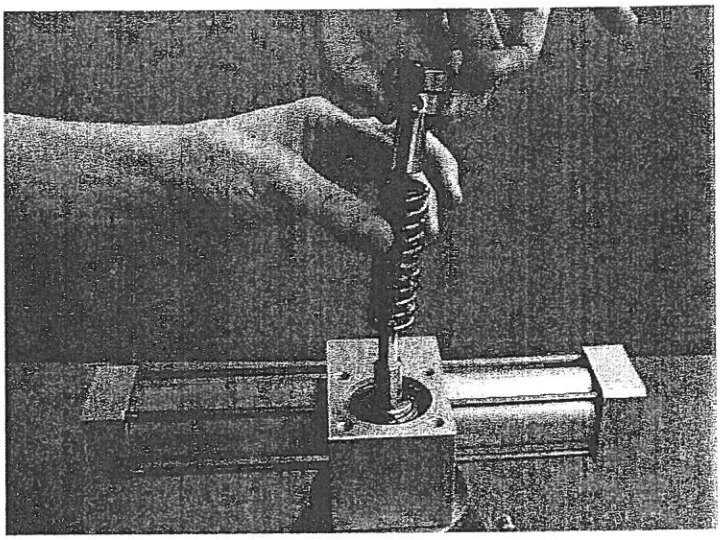

Dévisser les 4 vis du vérin pneumatique rotatif.

To unscrew 4 screws of the rotary pneumatic cylinder.

Desatornillar los 4 tornillos abajo del gato rotative

Die 4 Schrauben des Rotations-Druckzylinder aufschrauben.

Dégager le verin pneumatique.

To release the rotary pneumatic cylinder.

Desaflojar la gato rotative.

Rotations-Druckzylinder abnehmen.

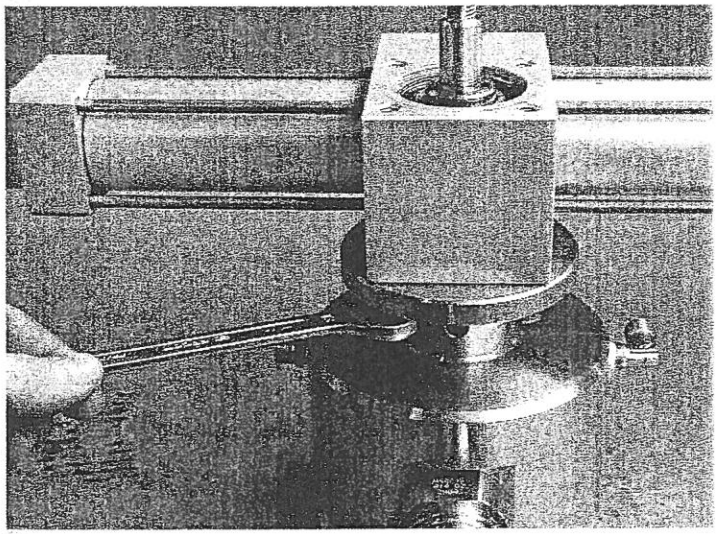

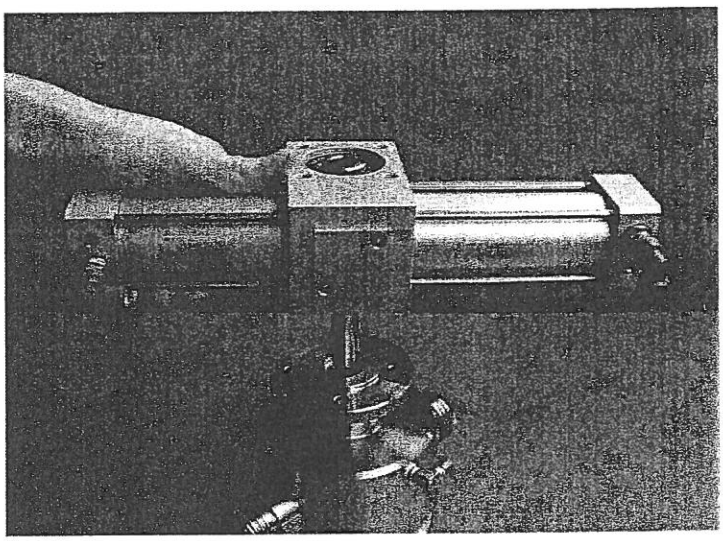

Retirer la clavette de la tige du clapet.

To pull the wedge of the stem of the valve.

Extraer la chaveta.

Den Keil des Klappenstifts entnehmen.

Déposer le clapet par le bas de la tête.

To deposit the valve by the low of the head.

Saltar el clapeto abajo de la cabeza.

Die Klappe über den Unterteil des Kopfes abnehmen.

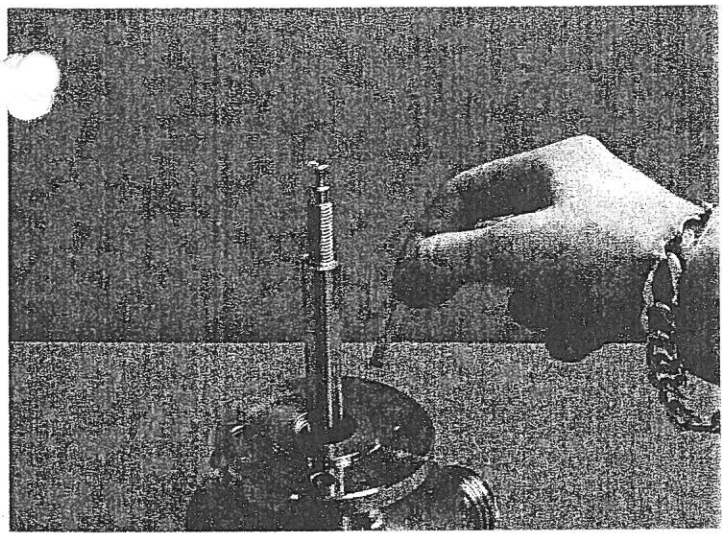

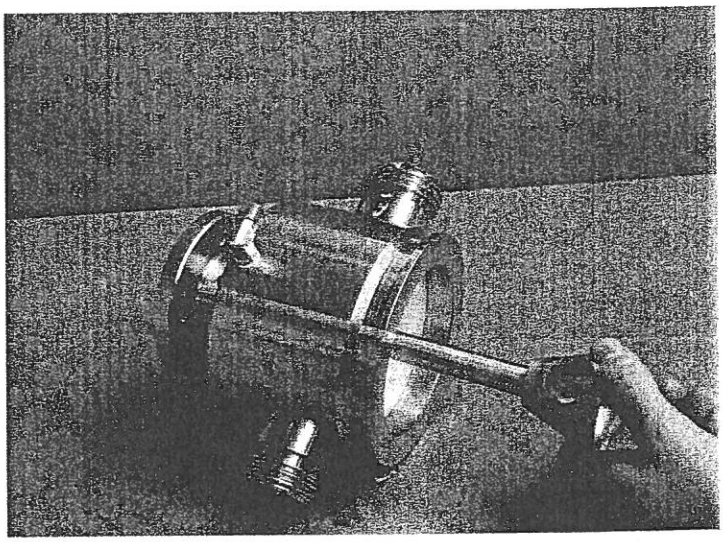

Devisser les 2 nes filetés d'entrée et sortie produit.

To unscrew 2 threaded noses, arrival and output produces.

Desatornillar los 2 racores de aspiracion y de impulsion.

Die zwei Gewindenasen der Produkteingabe und nausgabe abschrauben.

Déposer le siège de la tête.

To deposit the seat of the head.

Extraer el asiento de la cabeza.

Den Sitz des Kopfes abnehmen.

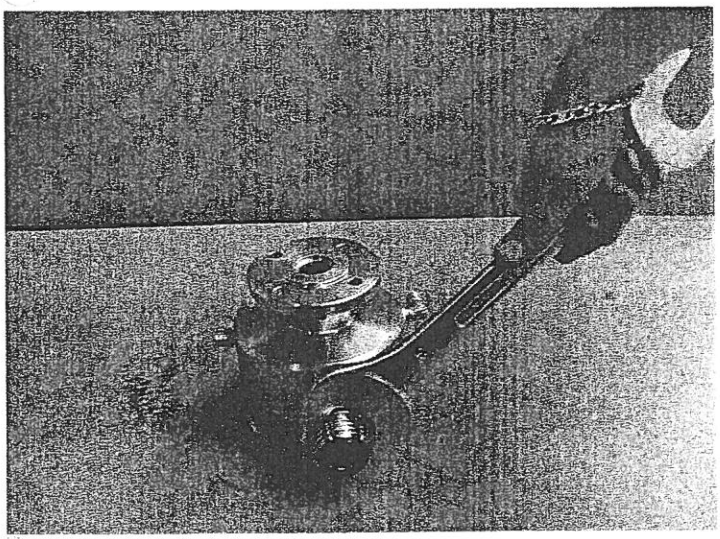

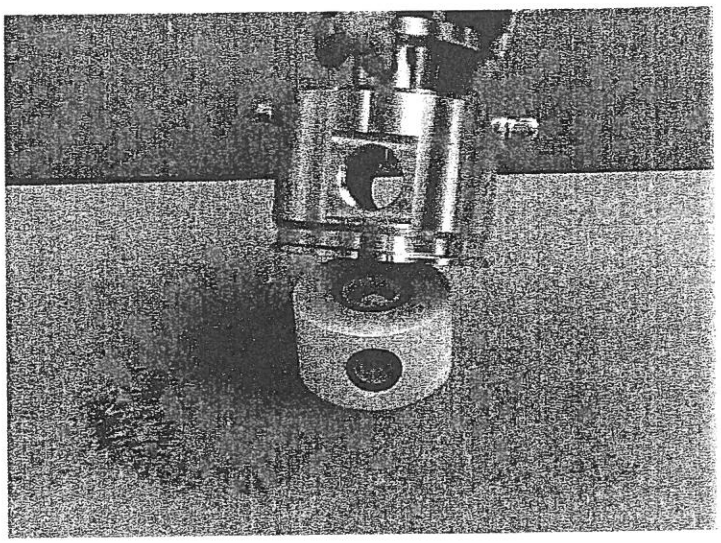

Déposer les joints torique.
To deposit o'ring seals.
Extraer la junta torica.
Die O-Ring-Dichtungen abnehmen.

Sortir le joint racleur.
To exit the seal.
Saltar la junta rascadora.
Den Abstreifer herausnehmen.

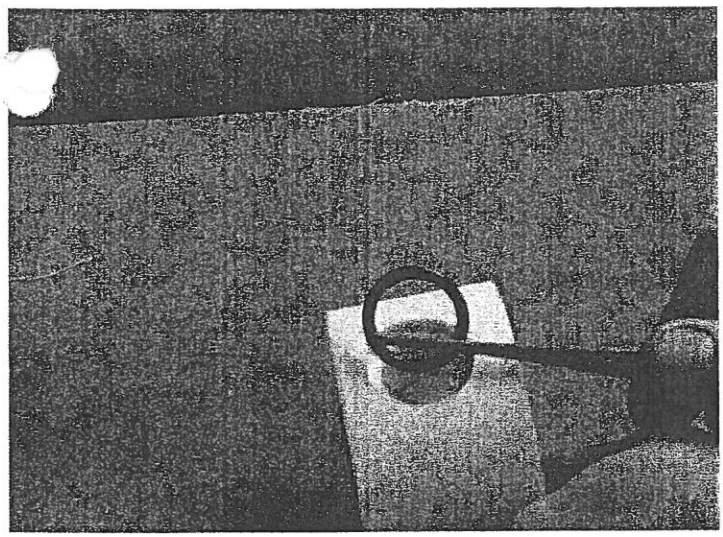

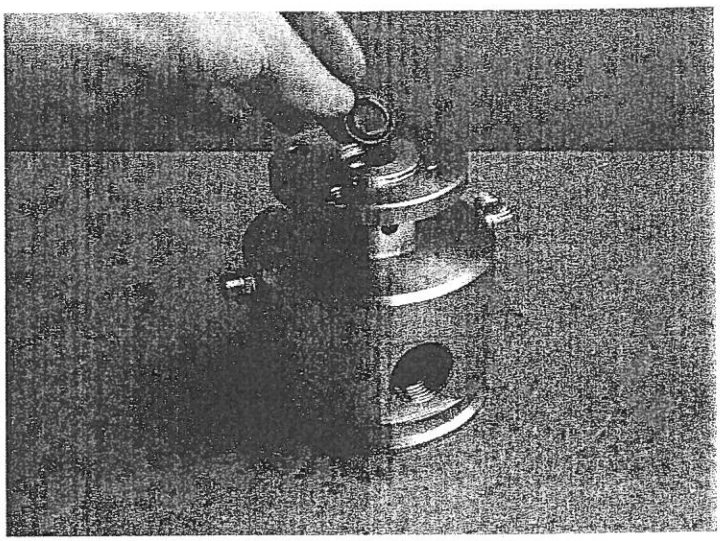

Déposer la bague porte joint.

To deposit the ring wears joint.

Saltar el anillo.

Den Dichtungsträgerring abnehmen.

Déposer les joint de la bague.

To deposit joint of the ring.

Extraer la junta.

Die Dichtung vom Ring abnehmen.

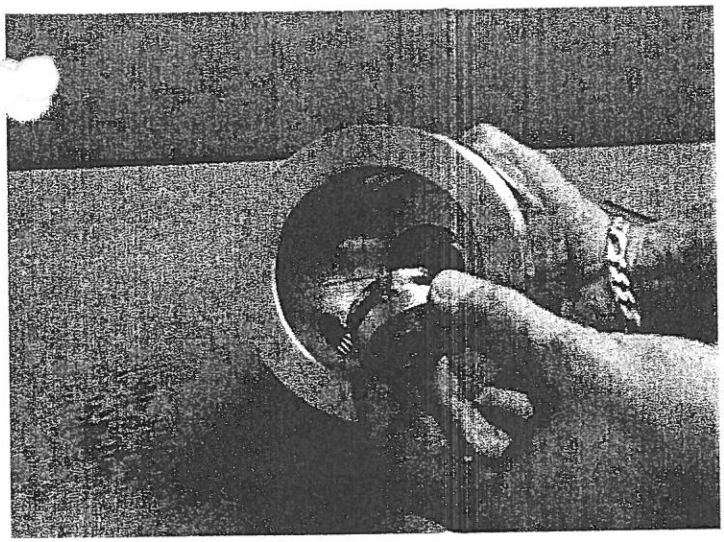

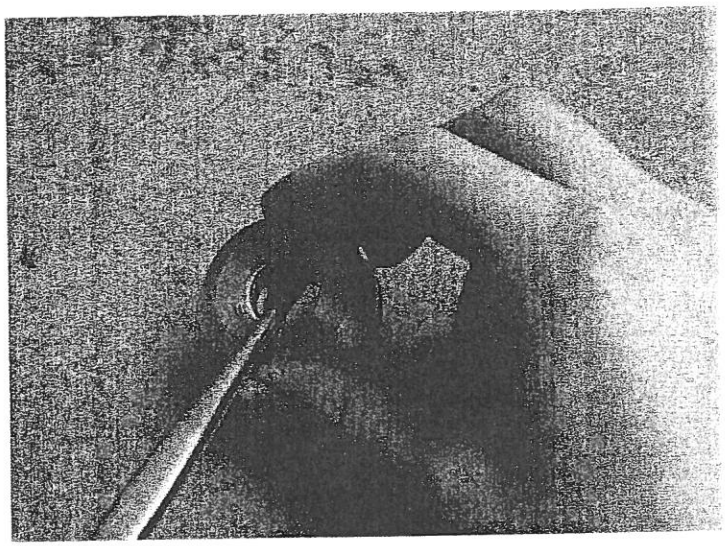

Joint à lobes.
Joint to lobes.
La junta lobulada.
Keulen-Dichtung

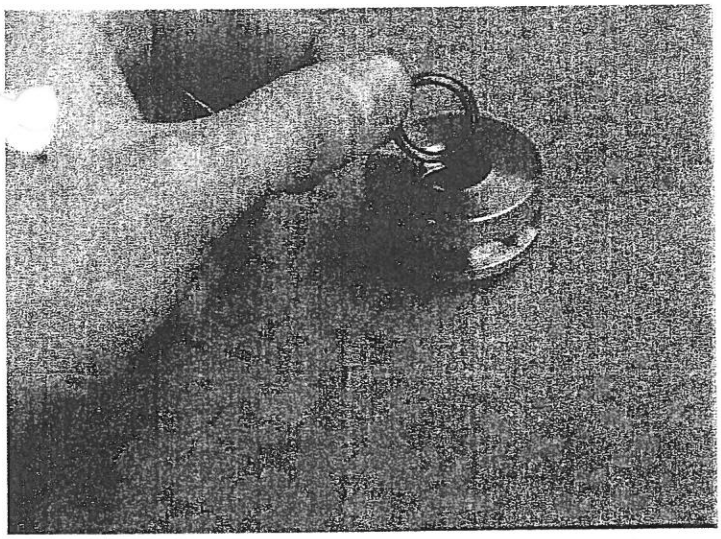

Bagues anti extrusion.
Rings anti extrusion.
Anillo anti-extrusion.
Anti-Extrusions-Ring

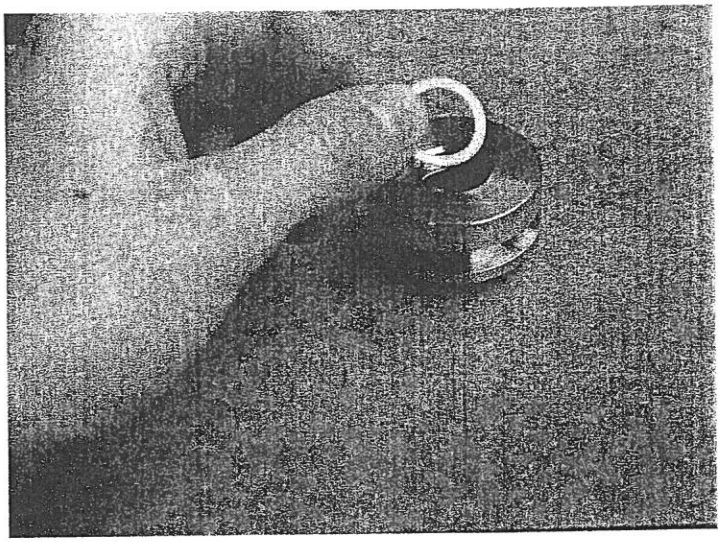

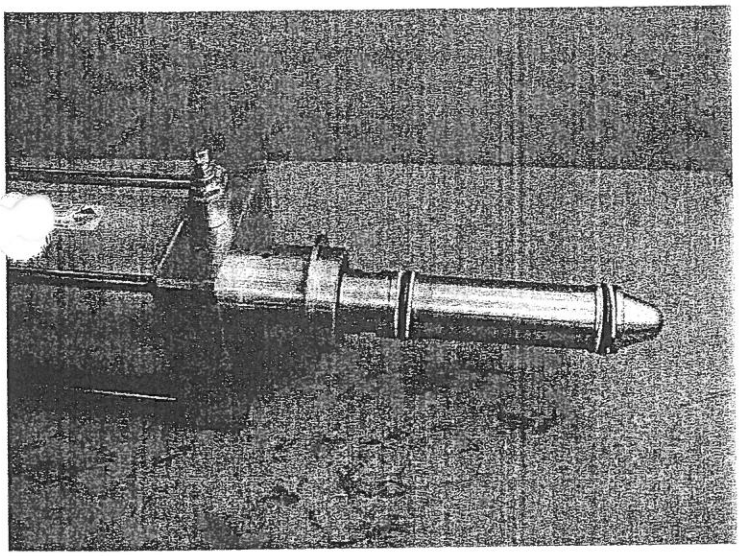

Maintenance du piston

Maintenance of the piston

Mantenimiento del piston

Wartung des Kolbens

Desserer le collier clamp

To loosen the clamp collar

Aflojar la brida por encima del gato

Clamp-Ring öffnen.

Déposer l'ensemble, vérin pneumatique et piston.

To deposit the totality, pneumatic cylinder and piston.

Deponer el conjunto gato y piston

Den Satz Druckzylinder und Kolben abnehmen

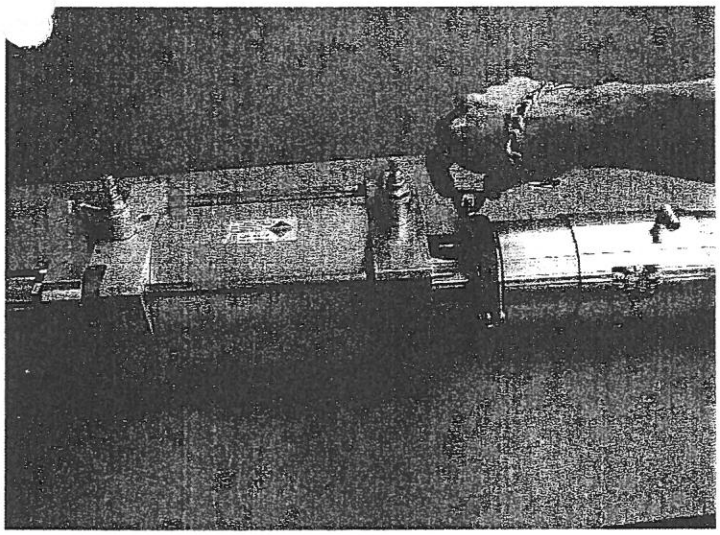

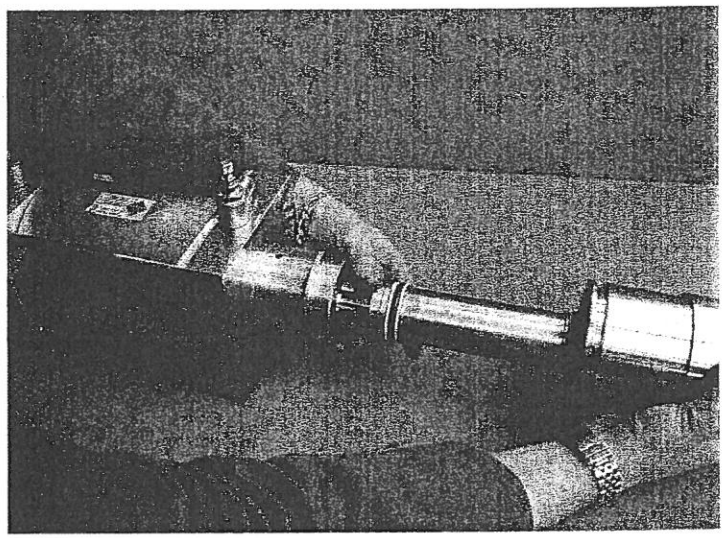

Dégager le piston de l'axe du vérin pneumatique.

To release the piston of the axis of the pneumatic cylinder.

Desaflojar el piston del eje del gato

Den Kolben von der Achse des Druckzylinders abnehmen.

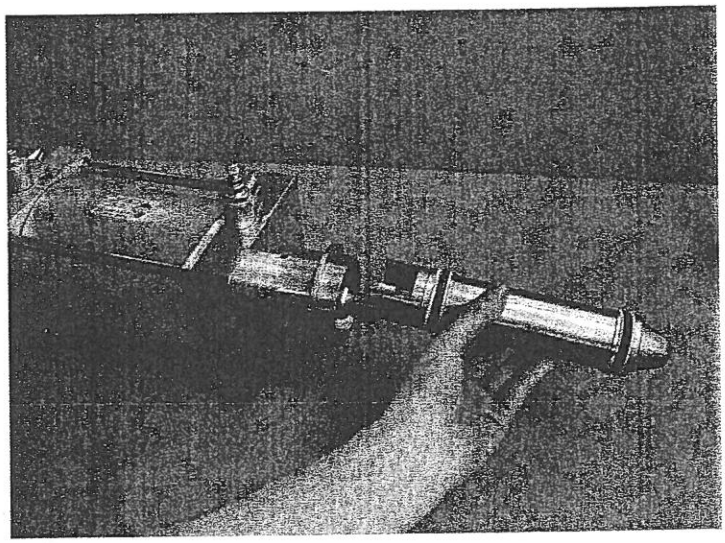

Déposer la bague anti extrusion.
To deposit the anti extrusion ring.
Deponer el anillo anti-extrusion.
Den Anti-Extrusions-Ring abnehmen.

Déposer le joint torique.
To deposit the o'ring seal.
Deponer la junta torica.
Die O-Ring-Dichtung abnehmen.

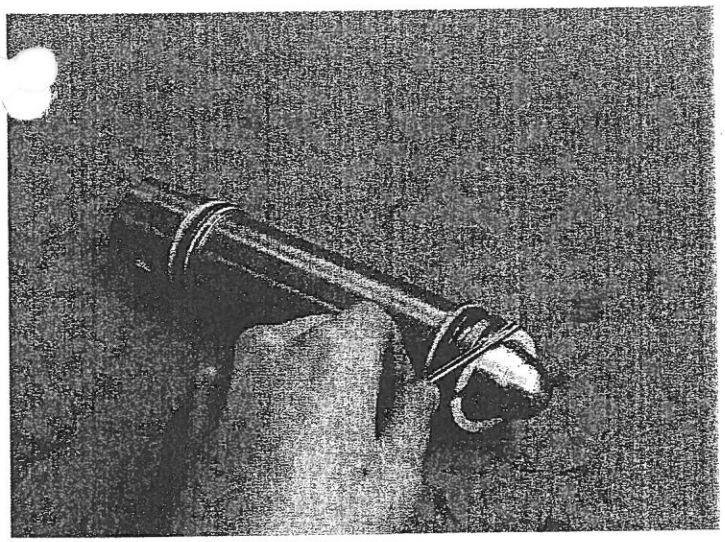

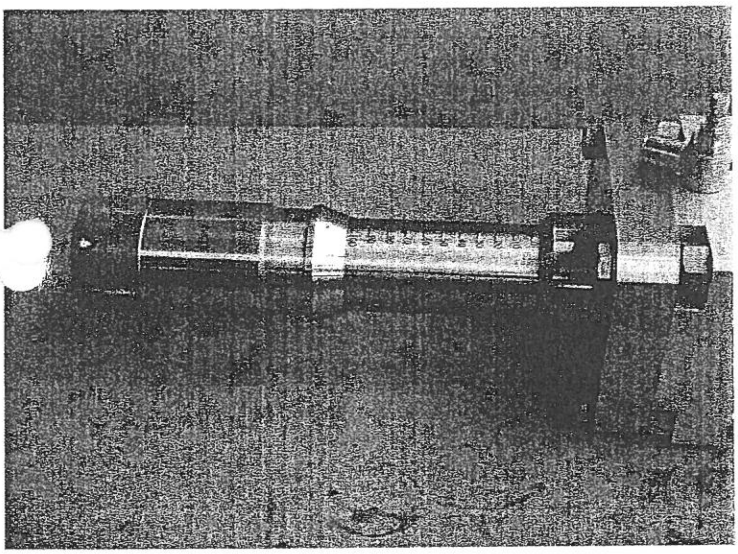

Maintenance du système de réglage

Maintenance of the sytem of adjustment

Mantenimiento del sistema de regulatcion

Wartung des Regulierungssystems

Démonter les 4 vis de liaison entre le vérin pneumatique et le système de réglage.

To pull 4 screws of linking between the pneumatic cylinder and the system of adjustment.

Desatornillar los 4 tornillos de enlace entre el gato y el sistema de regulacion.

Die 4 Verbindungsschrauben zwischen Druckzylinder und Regulierungssystem abmontieren.

Dégager le système de réglage du vérin pneumatique.

To release the system of adjustment of the pneumatic cylinder.

Desaflojar el sistema de regulacion del gato.

Das Regulierungssystem vom Druckzylinder abnehmen.

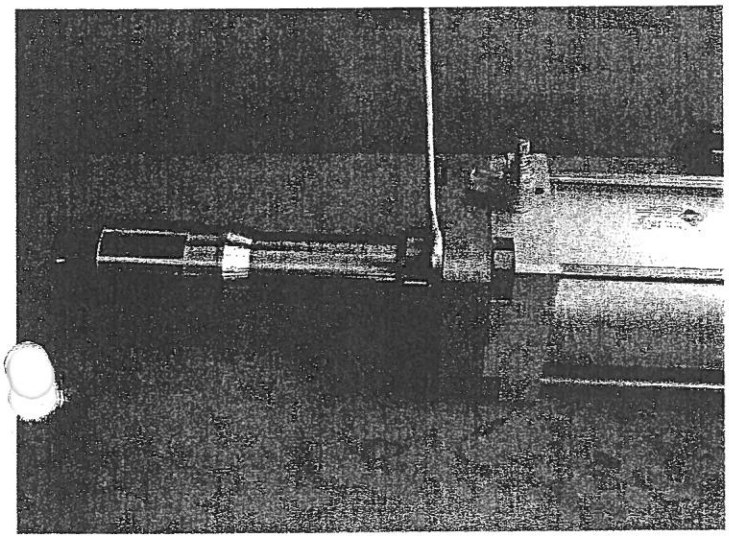

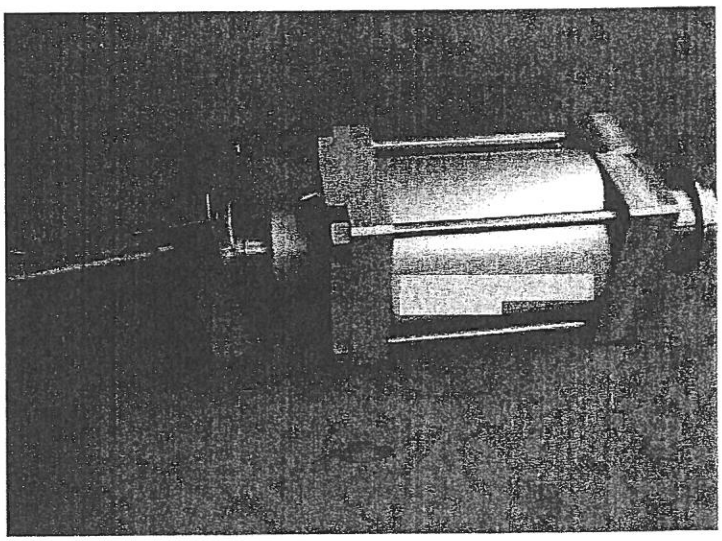

Dévisser les deux vis pointeaux.

To unscrew 2 screws.

Desatornillar los 2 tornillos .

Die 2 schrauben aufschrauben.

Dégager le vernier de réglage.

To release the vernier of adjustment.

Desaflojar el posicionador.

Den Regulierungsnonius abnehmen.

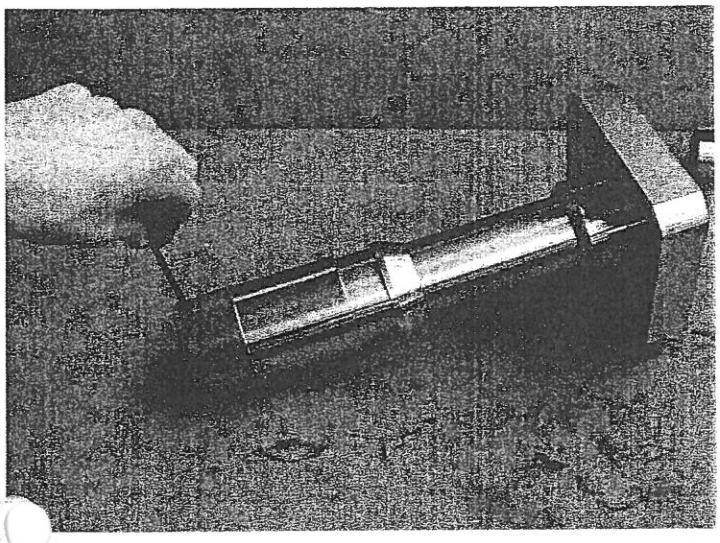

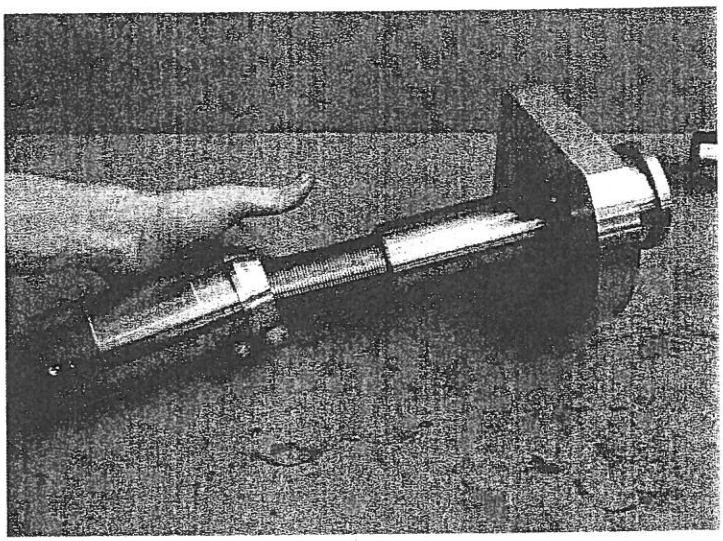

Dévisser la butée.
To unscrew the backstop.
Desatornillar el tope.
Den Anschlag abschrauben.

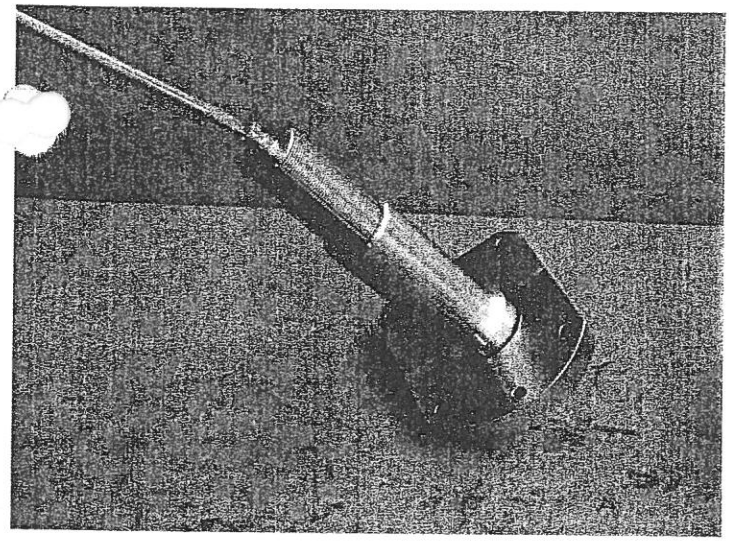

Retirer la butée.
To pull the backstop.
Sacar el tope.
Den Anschlag entnehmen.

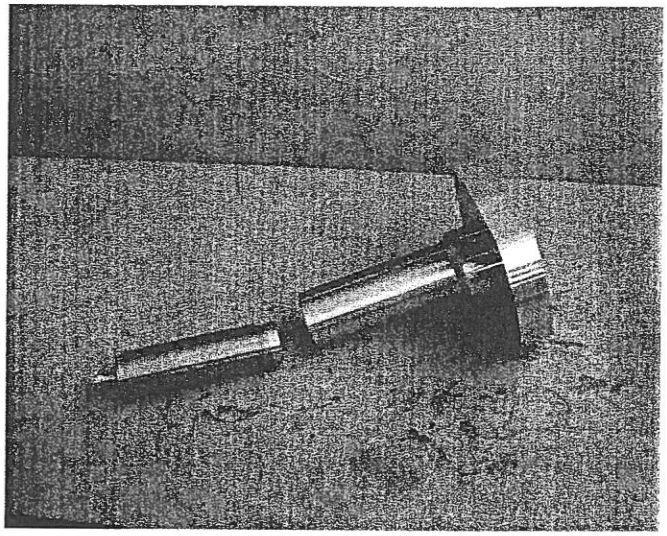

Retirer la butée plastique.

To pull the plastic backstop.

Sacar el tope.

Den Plastikanschlag entnehmen.

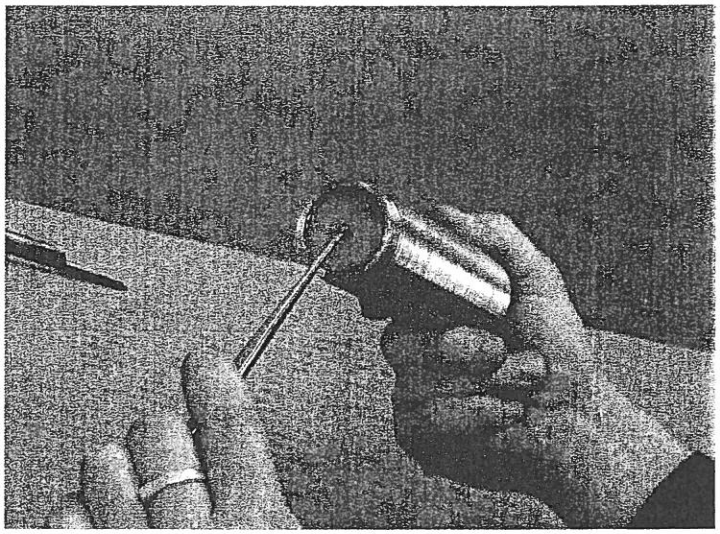

INSTRUCTION MANUAL

CE

DOSYMIX MIXERS

DM 2000

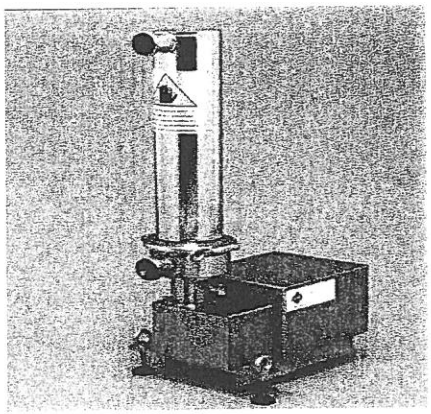

CONTENTS

CHARACTERISTICS

TECHNICAL CHARACTERISTICS

MIXER:

Type :	DM 2000
Capicity :	8 Litres
Operating temperature range :	90° C Maxi in production 140° C Maxi for 5 min. in static mode
Suction coupling :	Nez SMS 51
Discharge coupling :	Nez SMS 51
Weight :	50 kg

ELECTRICITY:

Power supply voltage :	220V-380 V tri
Frequency :	50 Hz
Power :	0.75 Kw

HYDRAULIC BARRIER :

Coupling :	1/4 inch gas female

IN PRODUCTION :

Fluid :	Mains water
Quality :	Food
Flow-rate :	10l/h necessary
Pressure :	2 bar

DURING CLEANING:

Fluid :	CIP solution.
Flow-rate :	10l/h
Pressure :	3 bar maxi

CLEANING IN PLACE (N.E.P. ou C.I.P en anglais)

Pressure :	3 bar maxi
Flow-rate :	22 m^3/h mini
Coupling :	SMS 51
Product :	Souda 80°C 2% Acid 75°C 1.5%

THEORY OF OPERATION

The base products are fed in from the side on the mixer inlet.

Mixing is caused by the forward flow and backflow simultaneous circulation (two impellers rotating) The product is evacuated from the outlet side of the mixer, depending on the inlet flow.

VARIOUS SOLUTIONS FOR THE INJECTION OF THE BASE AND ADDITIVE.

- CONTINUOUS INJECTION OF BASE AND ADDITIVE IN PULSED MODE,
- CONTINUOUS INJECTION OF BASE AND ADDITIVE IN CONTINUOUS MODE,
- INJECTION OF BASE IN PULSED MODE AND ADDITIVE IN PULSED MODE.

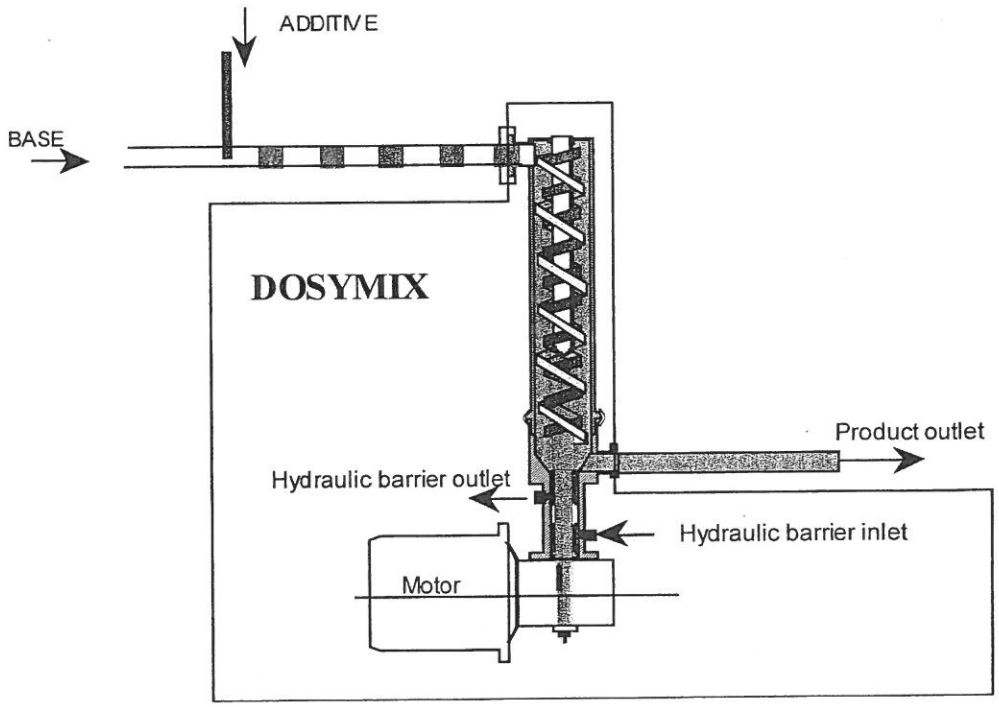

DESCRIPTION OF NAMEPLATE

V	Hz	Tr/min	Cos φ	KW

V: phase-to-phase voltage for star connection
Hz: voltage frequency
Tr/min: motor revolutions per minute
Cos φ: cosine of the phase shift angle between the voltage and the current consumed by the motor
KW: motor power.

MOTOR TECHNICAL DOCUMENTATION

MOTOR REDUCTION UNIT TECHNICAL DATA SHE

Product: Motor reduction unit Mb assembly MU / Motor series LS 4 poles carcass of light aluminum, front bearing of cast iron rear bearing of cast iron, terminal box of aluminum alloy.
designation: Mb2201 B3 NU H 10.33 MUFT / 4P - 1500 min-1 LS100L 0.75 KW 400YV-50Hz terminal box in position A (above standard), cable gland in position 1 (right)

Motor			
Series:	LS	Insulation class	F
Nominal voltage and frequency	400 V - 50Hz	Coupling	star
Polarity - speed	4P - 1500 min-1	Max. ambient temperature (°C)	40
Maximum altitude (m)	1000	Apparent nominal power (kVA)	1.39
Assigned power (kW)	0.75	Type of service	S1
Nominal speed under load (min-1)	1400	Rated current (A)	2.01
Nominal moment (Nm)	5.12	Id/In	4.50
Starting moment (Nm)	12.28	No-load current (A)	
Max starting moment (Nm)	12.79	Minimum acceptable starting time (s)	12.6
Cold stall rotor time (s)	12	Hot stall rotor time (s)	6
Cos phi at 4/4 load	0.77	Efficiency at 4/4 load (%)	70
Cos phi at 3/4 load	0.71	Efficiency at 3/4 load (%)	70
Cos phi at 2/4 load	0.59	Efficiency at 2/4 load (%)	66
Moment of inertia J (Kg.m²)	0.0018	Weight (kg)	9.3
Balancing class	N (normal)	Acoustic pressure level (dBA)	47
Balancing type	H (half-key: standard)	Acoustic pressure level (dBA)	55
Front bearing	6204 ZZ C3	Quantity of lubricant/ front bearing (g)	
Rear bearing	6203 ZZ C3	Quantity of lubricant/ rear bearing (g)	
Motor protection index:	IP55	Bearing lubricating intervals (h)	

type f impregnation: T (for relative humidity < 90%) ; type of nameplate: standard; balancing type: H (half-key, standard) ; balancing class: N (normal) ; tapped hole flange FT 85

Reducer			
Reducer type	Mb2201	Input thermal power (kW)	1.2
Exact reduction	10,3333	Slow shaft	Hollow shaft
Reducer input speed (min-1)	1400	Generic attachment	Bare casing
Slow shaft available moment (Nm)	42.53	Reducer input flange	FT 85
Exact output speed	135.48	Type of lubricant	synthetic oil PAO ISO VG 460
K factor	2.37	Quantity of oil (l)	1.21
Agma class	III	Motor reducer mass (kg)	20.8

LEROY SOMER

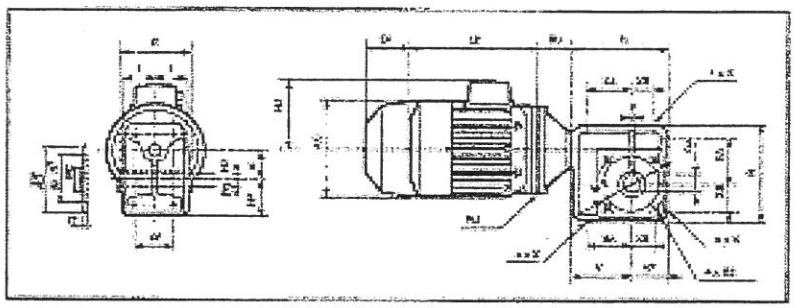

(mm)

AB	CP	D	E	F	G	GA	H	HA	HC	HF	HG	HU	I
	21,5	25H7	108	8		28,3				56			49
IN	IT	M2	MC	phi	R	RB	RD	S2	V	VR	X	X	XA
80	3	105	40	96	140,00			4-M8 x 12	84		45	4-M8 x 12	67
XB	XC	XF											
38		60											

Motor						
AC	HJ	J	LB	LJ	I	II
170	133	89,00	215	19,50	43,00	60,00

DOSYS

Des pompes au process

INSTRUCTION MANUAL

CE

DOSYMIX MIXERS

DM 4000

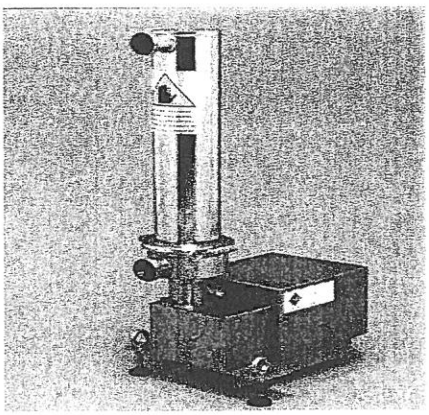

CONTENTS

CHARACTERISTICS

TECHNICAL CHARACTERISTICS

MIXER:

Type :	DM 4000
Capicity :	17 Litres
Operating temperature range :	90° C Maxi in production 140° C Maxi for 5 min. in static mode
Suction coupling :	Nez SMS 63
Discharge coupling :	Nez SMS 63
Weight :	81 kg

ELECTRICITY :

Power supply voltage :	220V-380 V tri
Frequency :	50 Hz
Power :	2.2 Kw

HIDRAULIC BARRIER :

Coupling :	1/4 inch gas female

IN PRODUCTION :

Fluid :	Mains water
Quality :	Food
Flow-rate :	10l/h necessary
Pressure :	System, 2 bar

DURING CLEANING:

Fluid :	CIP solution.
Flow-rate :	10l/h
Pressure :	3 bar maxi

CLEANING IN PLACE (N.E.P. ou C.I.P en anglais)

Pressure :	3 bar maxi	
Flow-rate :	22 m³/h mini	
Coupling :	SMS 63	
Product :	Souda 80°C 2%	Acid 75°C 1.5%

THEORY OF OPERATION

The base products are fed in from the side on the mixer inlet.

Mixing is caused by the forward flow and backflow simultaneous circulation (two impellers rotating) The product is evacuated from the outlet side of the mixer, depending on the inlet flow.

VARIOUS SOLUTIONS FOR THE INJECTION OF THE BASE AND ADDITIVE.

- CONTINUOUS INJECTION OF BASE AND ADDITIVE IN PULSED MODE,
- CONTINUOUS INJECTION OF BASE AND ADDITIVE IN CONTINUOUS MODE,
- INJECTION OF BASE IN PULSED MODE AND ADDITIVE IN PULSED MODE.

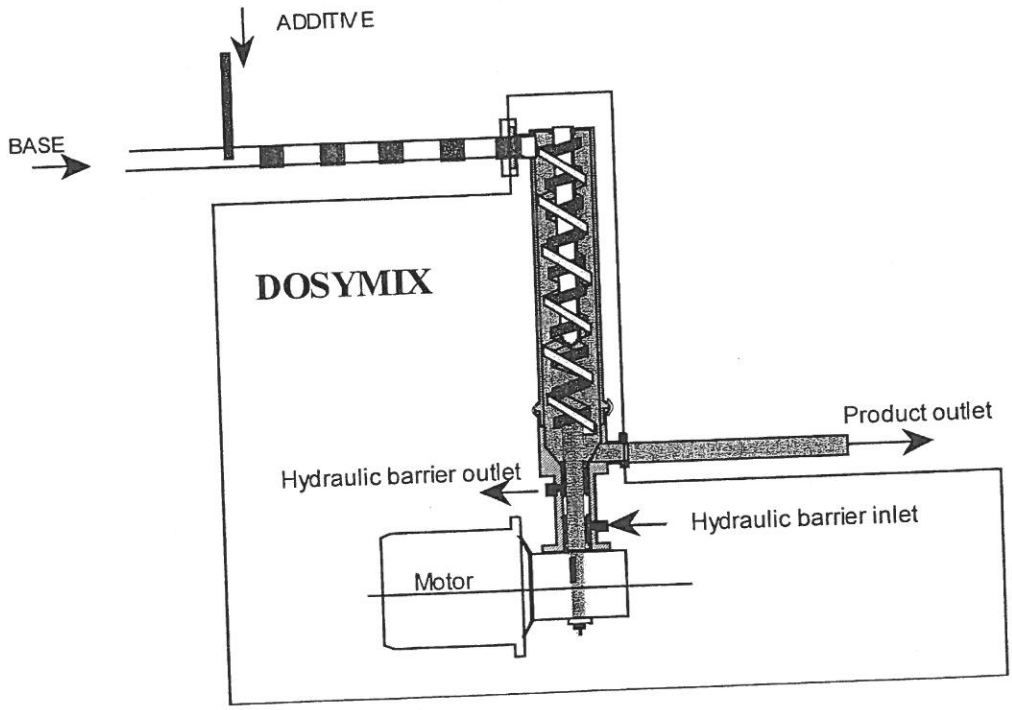

DESCRIPTION OF NAMEPLATE

V	Hz	Tr/min	Cos φ	KW

V: phase-to-phase voltage for star connection
Hz: voltage frequency
Tr/min: motor revolutions per minute
Cos φ: cosine of the phase shift angle between the voltage and the current consumed by the motor
KW: motor power.

MOTOR TECHNICAL DOCUMENTATION

MOTOR REDUCTION UNIT TECHNICAL DATA SHE

Product: Motor reduction unit Mb assembly MU / Motor series LS 4 poles carcass of light aluminum, front bearing of cast iron rear bearing of cast iron, terminal box of aluminum alloy. designation: Mb2401 V6 NU H 10.33 MUFT / 4P - 1500 min-1 LS100L 2.2 KW 400YV-50Hz terminal box in position A (above standard), cable gland in position 1 (right)

Motor			
Series:	LS	Insulation class	F
Nominal voltage and frequency	400 V - 50Hz	Coupling	star
Polarity - speed	4P - 1500 min-1	Max. ambient temperature (°C)	40
Maximum altitude (m)	1000	Apparent nominal power (kVA)	3,35
Assigned power (kW)	2,2	Type of service	S1
Nominal speed under load (min-1)	IP55	Rated current (A)	4,8
Nominal moment (Nm)	14,63	Id/In	6
Starting moment (Nm)	30,72	No-load current (A)	8
Max starting moment (Nm)	36,57	Minimum acceptable starting time (s)	4
Cold stall rotor time (s)	8	Hot stall rotor time (s)	81
Cos phi at 4/4 load	0,81	Efficiency at 4/4 load (%)	91,5
Cos phi at 3/4 load	0,73	Efficiency at 3/4 load (%)	79,8
Cos phi at 2/4 load	0,59	Efficiency at 2/4 load (%)	20
Moment of inertia J (Kg.m²)	0,0043	Weight (kg)	48
Balancing class	N (normal)	Acoustic pressure level (dBA)	57
Balancing type	H (half-key: standard)	Acoustic pressure level (dBA)	
Front bearing	6206 ZZ C3	Quantity of lubricant/ front bearing (g)	
Rear bearing	6205 ZZ C3	Quantity of lubricant/ rear bearing (g)	
Motor protection index:	IP55	Bearing lubricating intervals (h)	

type f impregnation: T (for relative humidity < 90%) ; type of nameplate: standard; balancing type: H (half-key, standard) ; balancing class: N (normal) ; tapped hole flangeFT130

Reducer			
Reducer type	Mb2401	Input thermal power (kW)	2,3
Exact reduction	10,3333	Slow shaft	Hollow shaft
Reducer input speed (min-1)	1436	Generic attachment	Bare casing
Slow shaft available moment (Nm)	125,96	Reducer input flange	FT 130
Exact output speed	138,97	Type of lubricant	synthetic oil PAO ISO VG 460
K factor	1,99	Quantity of oil (l)	0,63
Agma class	II	Motor reducer mass (kg)	48

DOSYS

Des pompes au process

LEROY SOMER

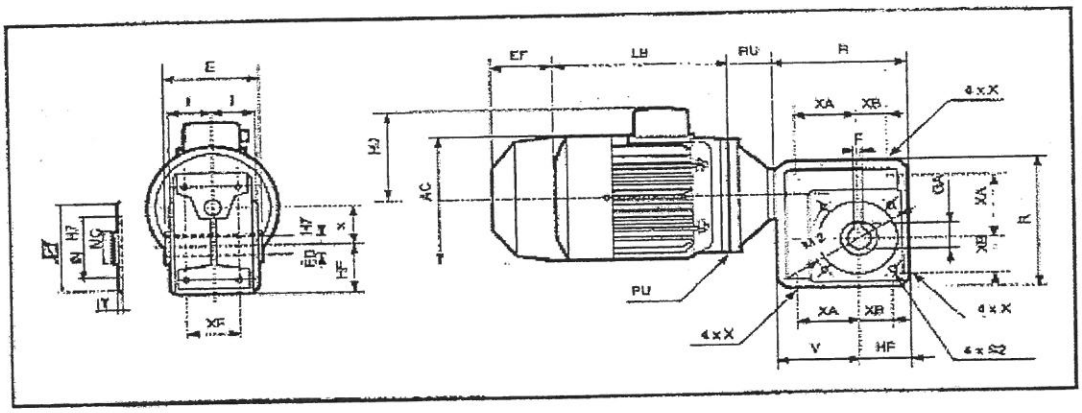

(mm)

AB	CP	D	E	F	G	GA	H	HA	HC	HF	HG	HU	I
	24.5	35H7	13.8	10		38.3				75			64
IN	IT	M2	MC	phi	R	RB	RD	S2	V	VR	X	X	XA
110	3.5	130	60	132	190,00			4-M10 x 15	115		63	4-M10 x 15	101
XB	XC	XF											
61		86											

Motor

AC	HJ	J	LB	LJ	T	U
200	148	90,00	290	19,50	43,00	60,00

INSTALLATION

PREPARING THE MIXER

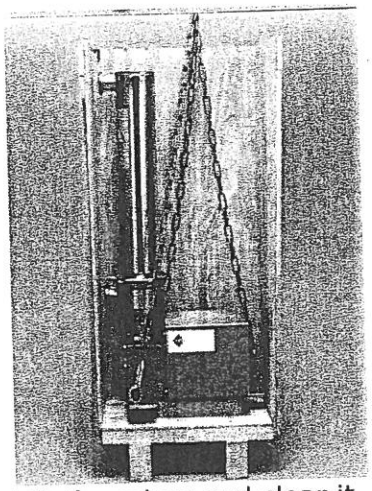

Lift the mixer and clear it from the case.

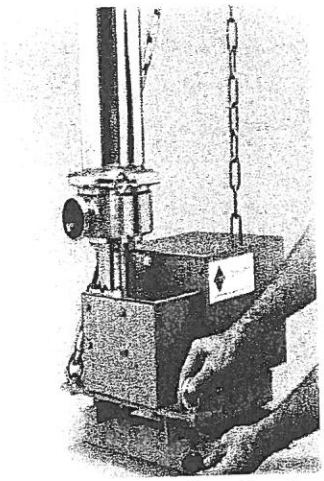

Assemble the feet supplied with the mixer

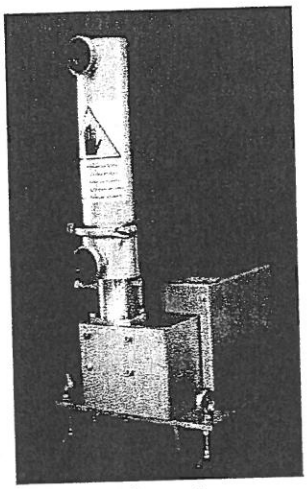

Remember to level the mixer.

PRECAUTION BEFORE MAKING CONNECTIONS

DOSYMIX machines are designed to operate vertically with the motor-reduction gear at the bottom.

They can stand on the floor using the support chassis provided for the purpose or may be wall-mounted using the attaching plate (see ASSEMBLY-DISASSEMBLY). Lifting rings are included.

It is preferable to:

- provide for an inlet in the upper part for the products to be mixed, so as to allow manual emptying at the end of production.
- make sure that the outside impeller ensures lifting during rotation.
- make sure the mixer is level before connecting the utilities (water and electricity).
- provide an access area for the control and maintenance of the machine.
- check that the various component parts are securely attached.

Before making any electric and hydraulic connections, check the specific aspects of the machine (electric voltage, power, fluid flow (water, cleaning solutions).

The various pipes are identified according to the type of product they carry, and the direction of connection.

ELECTRICAL CONNECTION

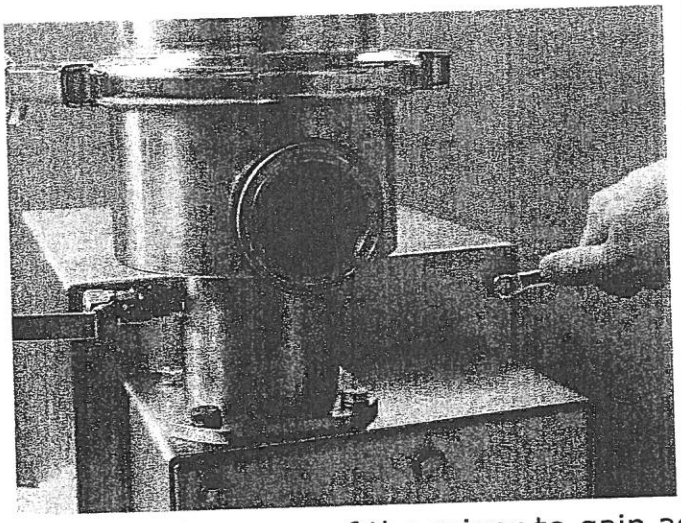


Unscrew the cover of the mixer to gain access to the motor.

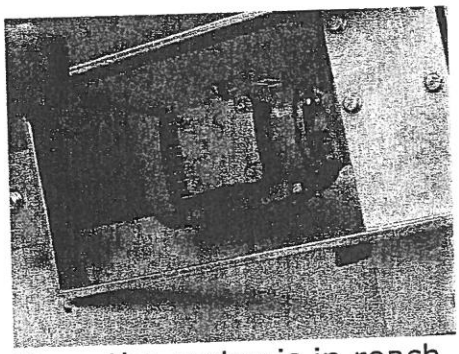

Once the motor is in reach, unscrew the cover from the electric box, paying attention to the tightness point.

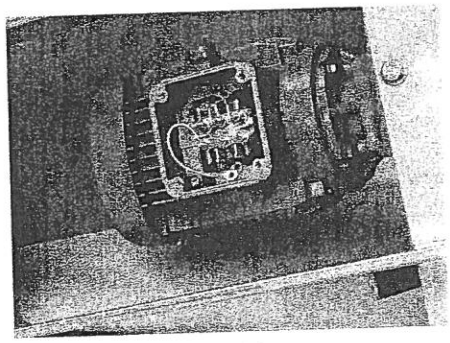

Before connecting, pay attention to the positioning of the electric bars, then to the running direction of the motor.

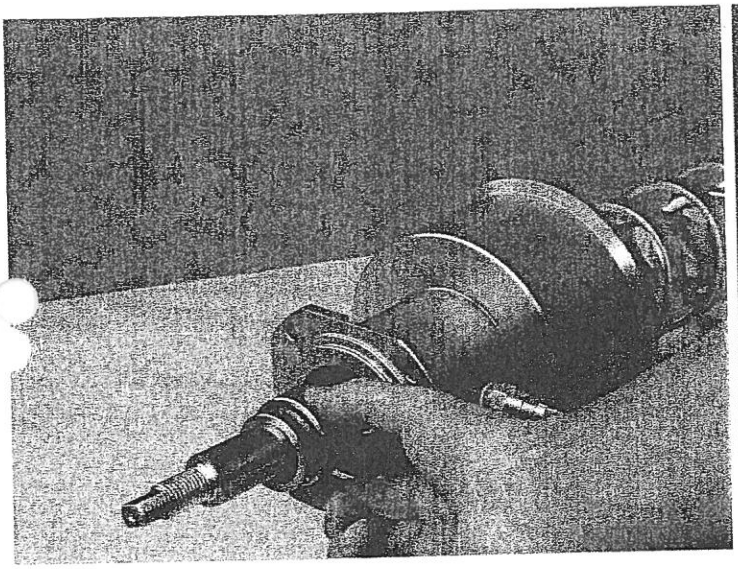

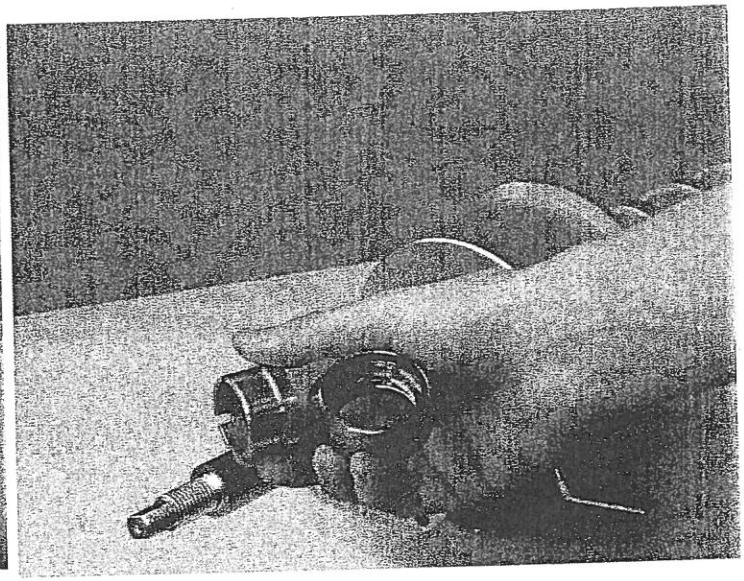

(F) Sortir la garniture de son arbre.
(GB) Take the packing out of the shaft
(E) Saque la empaquetadura de su eje
(D) Den Dichtungseinsatz von seiner Spindel entfernen.

F DEMONTAGE PARIE FIXE DE LA GARNITURE INFERIEURE
GB DESASSEMBLY OF FISED PART IN LOWER PACKING
E DESMONTAR LA PARTE FIJA DE LA EMPAQUATA INFRIOR
D DEMONTAGE DE FESTEN TEILE DES UNTEREN DICHTUNGSEINSATZS

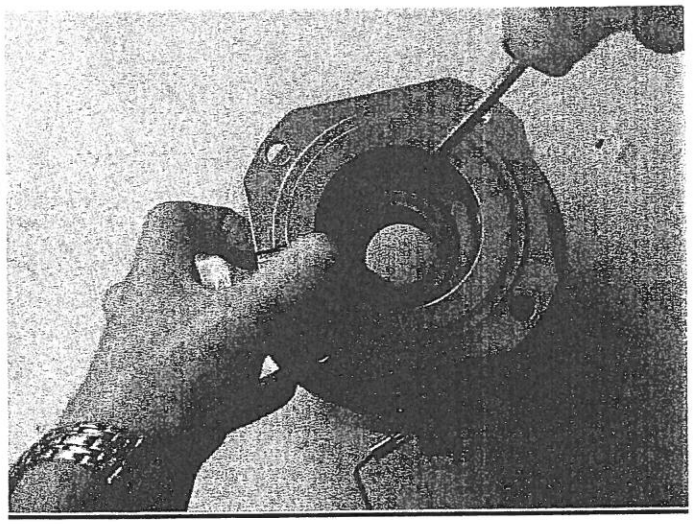

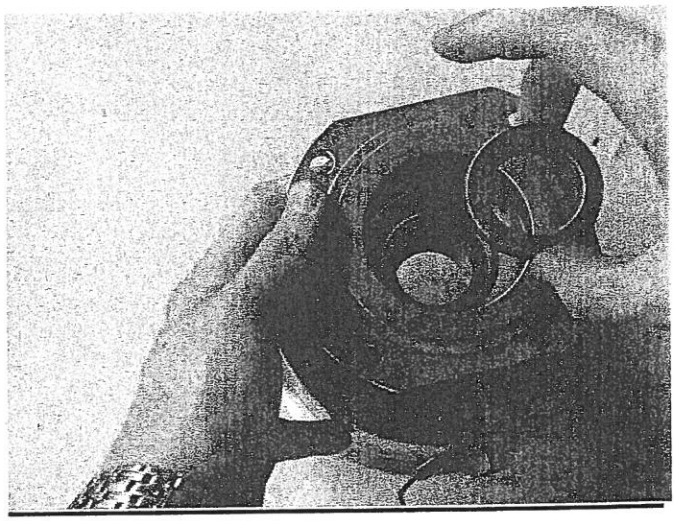

F Défaire la garniture inférieure avec l'aide d'un petit tournevis, en faisant attention de ne pas abîmer le bloc.

GB Release the upper packing using a small screwdriver, taking care not to damage the assembly.

E Afloje la empaquetadura inferior utilizando un destornillador pequeño, cuidadosamente para no estropear el bloque.

D Den unteren Dichtungseinsatz mit einem kleinen Schraubendreher lösen und acht geben, dass dabei der Block nicht beschädigt wird.

F Sortir délicatement la garniture.

GB Take the packing out gently.

E Retire cuidadosamente la empaquetadura.

D Vorsichtig den Dichtungseinsatz herausnehmen.

F DEMONTAGE PARTIE MOBILE DE LA GARNITURE SUPERIEURE
GB DISASSEMBLY OF UPPER PACKING MOBILE PART
E DESMONTAR LA PARTE MOVIL DE LA EMPAQUETUDERA SUPERIOR
D DEMONTAGE DES BEWEGLICHEN TEILS DES OBEREN DICHTUNGSEINSATZES

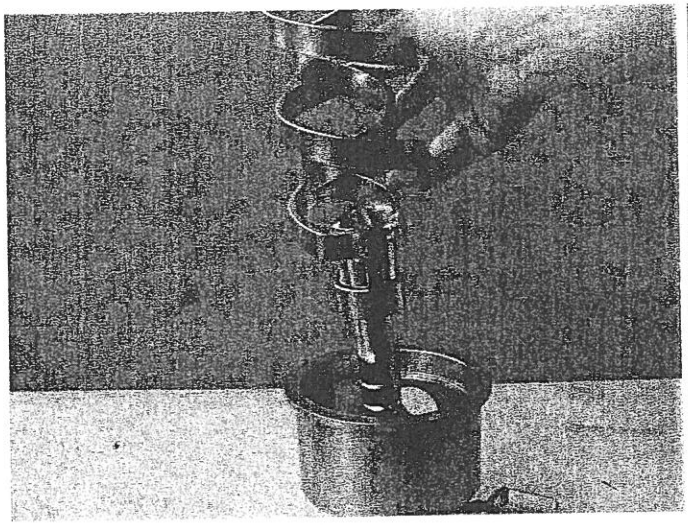

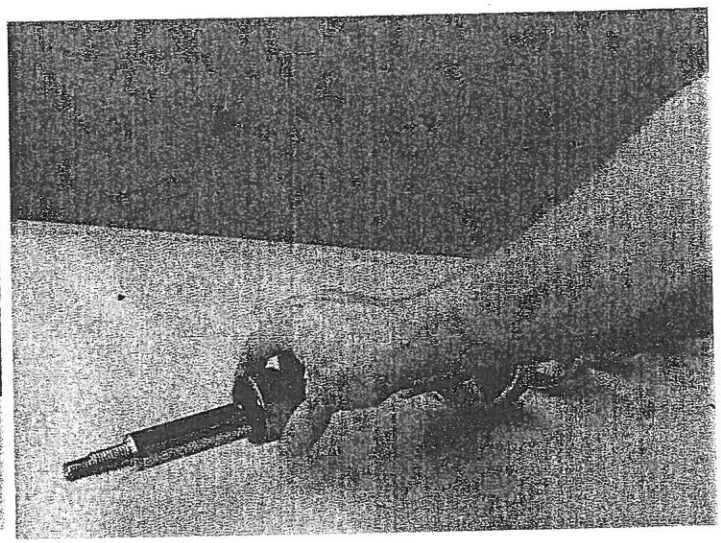

F Sortir l'hélice du bloc en faisant attention à l'arbre.

GB Release the upper packing using a small screwdriver, taking care not to damage the assembly.

E Saque la hélice del bloque teniendo cuidado con el eje.

D Die Welle aus dem Block heraus nehmen und dabei auf die Spindel acht geben.

F Retirer la garniture supérieure de l'hélice.

GB Take the packing out gently.

E Retire la empaquetadura superior de la hélice

D Den oberen Dichtungseinsatz der Welle entnehmen.

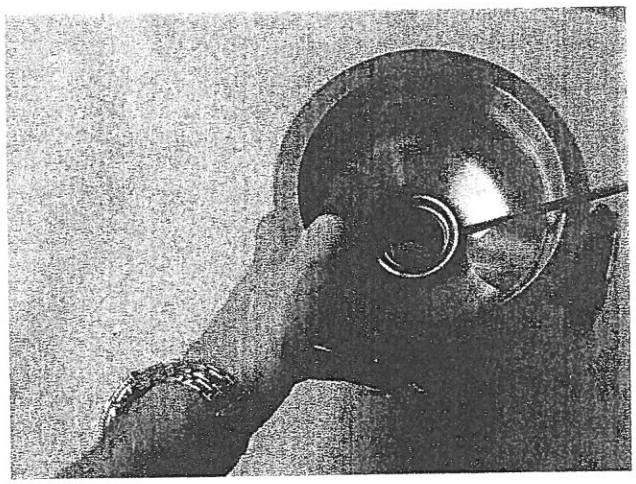

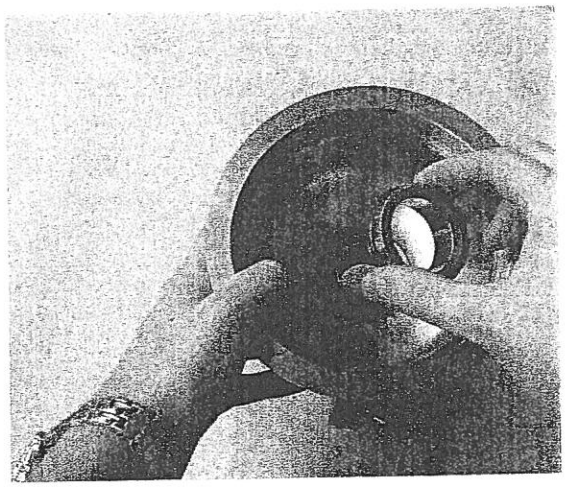

(F) Défaire la garniture inférieure avec l'aide d'un petit tournevis, en faisant attention de ne pas abîmer le bloc.

(GB) Release the upper packing using a small screwdriver, taking care not to damage the assembly.

(E) Afloje la empaquetadura inferior utilizando un destornillador pequeño, cuidadosamente para no estropear el bloque.

(D) Den unteren Dichtungseinsatz mit einem kleinen Schraubendreher lösen und acht geben, dass dabei der Block nicht beschädigt wird.

(F) Sortir délicatement la garniture.

(GB) Take the packing out gently.

(E) Retire cuidadosamente la empaquetadura.

(D) Vorsichtig den Dichtungseinsatz herausnehmen.

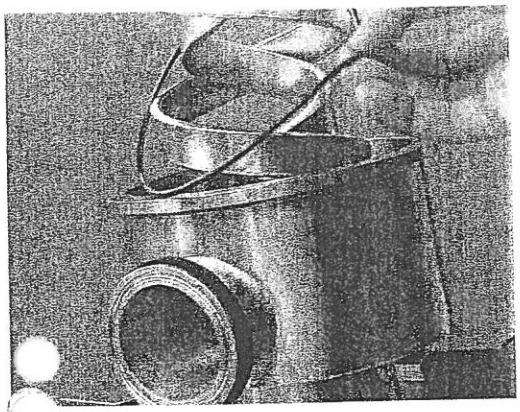

F Sortir le joint torique d'étanchéité.
GB Take out the O-ring.
E Retire la junta tórica de estanqueidad.
D Die O-Ring-Dichtung herausnehmen.

(F) MONTAGE PARTIE FIXE DE LA GARNITURE SUPERIEURE
(GB) ASSEMBLY OF UPPER PACKING FIXED PART
(E) MONTAR LA PARTE FIJA DE LA EMPAQUETADURA SUPERIOR
(D) MONTAGE DES FESTEN TEILS DES OBEREN DICHTUNGSEINSATZES

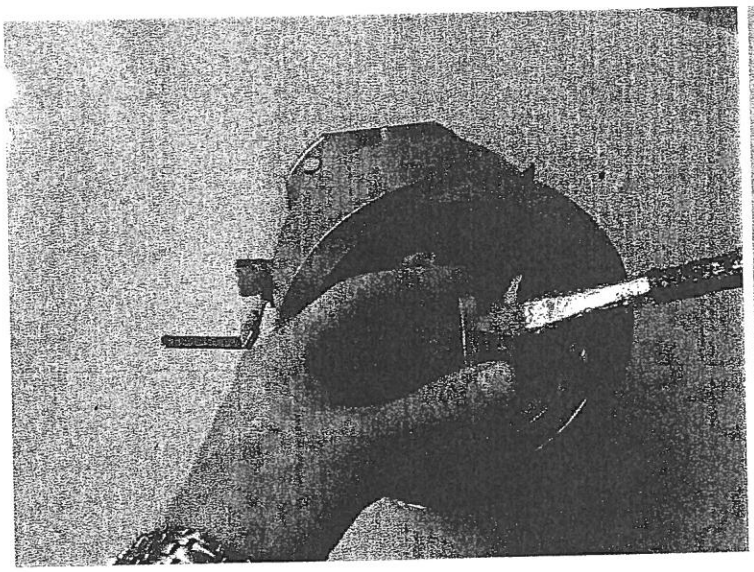

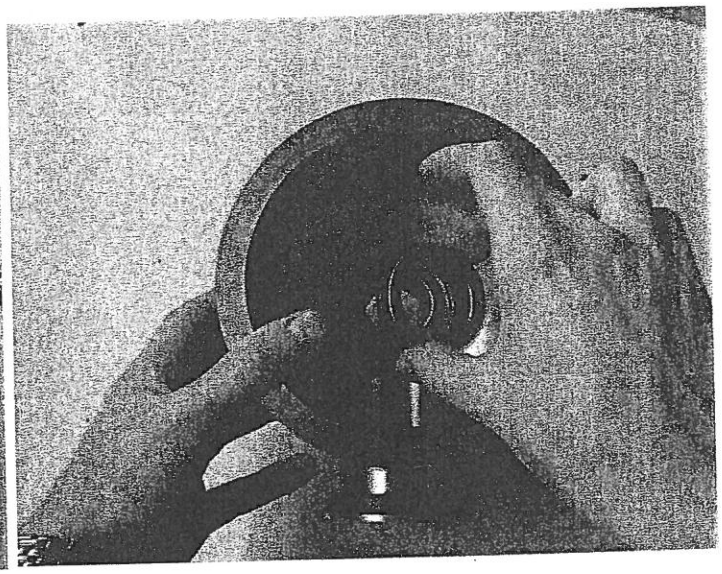

(F) Graisser la garniture supérieure avec de la graisse alimentaire.
(GB) Grease the upper packing with food quality grease.
(E) Engrase la empaquetadura superior con grasa alimenticia.
(D) Den oberen Dichtungseinsatz mit Lebensmittelfett schmieren.

(F) Mettre la garniture dans son logement par rapport au dé trompeur.
(GB) Fit the packing in its place as indicated by the polariser.
(E) Coloque la empaquetadura en su alojamiento de acuerdo a la marca de guía.
(D) Den Dichtungseinsatz entsprechend dem Polarisator in seinen Sitz einlegen.

F MONTAGE PARTIE FIXE DE LA GARNITURE INFERIEURE
GB ASSEMBLY OF FIXED PART IN LOWER PACKING
E MONTAR LA PARTE FIJA DE LA EMPAQUETADURA INFERIOR
D MONTAGE DES FESTEN TEILE DES UNTEREN DICHTUNGSEINSATZES

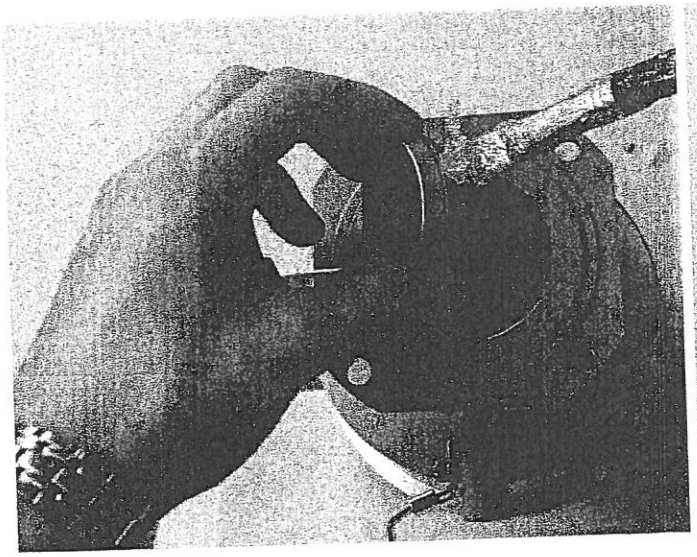

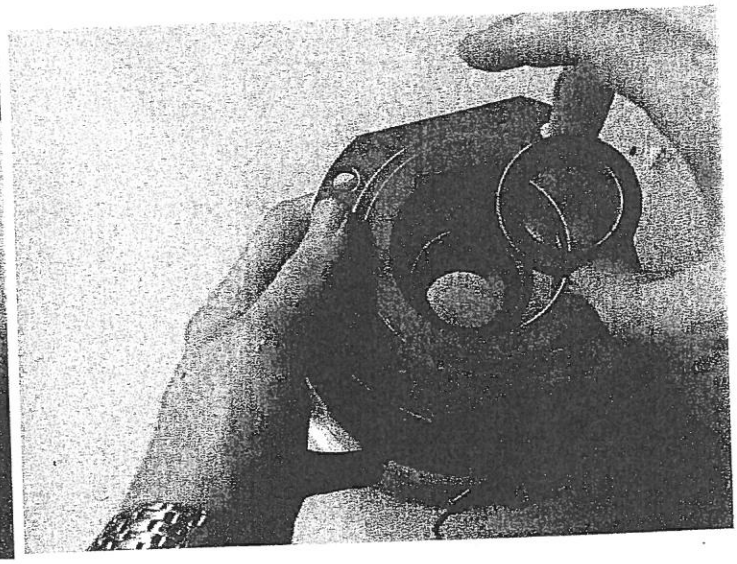

F Graisser la garniture avec de la graisse alimentaire.

GB Grease the packing with food quality grease.

E Engrase la empaquetadura con grasa alimenticia.

D Den Dichtungseinsatz mit Lebensmittelfett schmieren.

F Placer la garniture dans son logement par rapport au dé trompeur.

GB Put the packing in place with respect to the polariser.

E Coloque la empaquetadura en su alojamiento de acuerdo a la marca de guía.

D Den Dichtungseinsatz entsprechend dem Polarisator in seinen Sitz einlegen.

F MONTAGE PARTIE MOBILE DE LA GARNITURE SUPERIEUR
GB ASSEMBLY OF UPPER PACKING MOBILE PART
E MONTAR LA PARTE MÓVIL DE LA EMPAQUETADURA SUPERIOR
D MONTAGE DES BEWEGLICHEN TEILS DES OBEREN DICHTUNGSEINSATZES

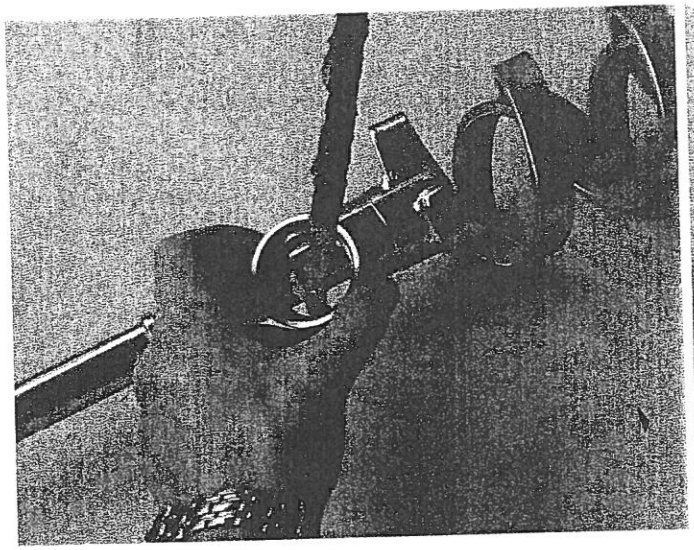

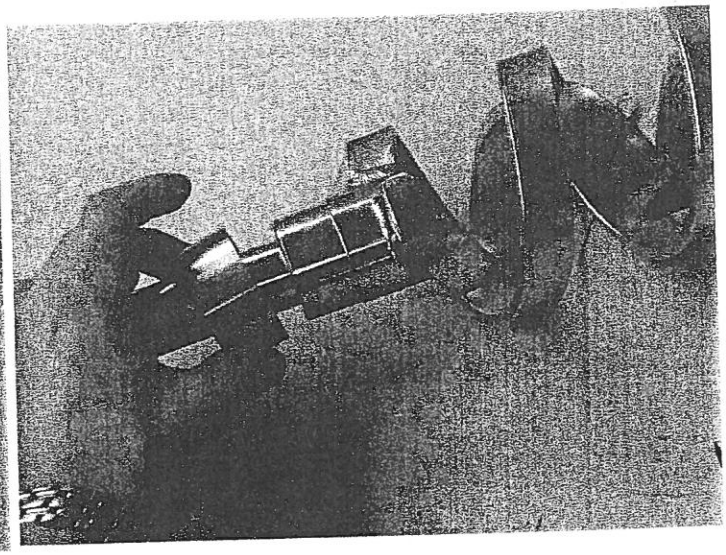

F Graisser la garniture avec de la graisse alimentaire.

GB Grease the packing with food quality grease.

E Engrase la empaquetadura con grasa alimenticia.

D Den Dichtungseinsatz mit Lebensmittelfett schmieren.

F Positionner la garniture par rapport au dé trompeur.

GB Position the packing with respect to the polariser.

E Coloque la empaquetadura de acuerdo a la marca de guía.

D Den Dichtungssatz entsprechend dem Polarisator positionieren.

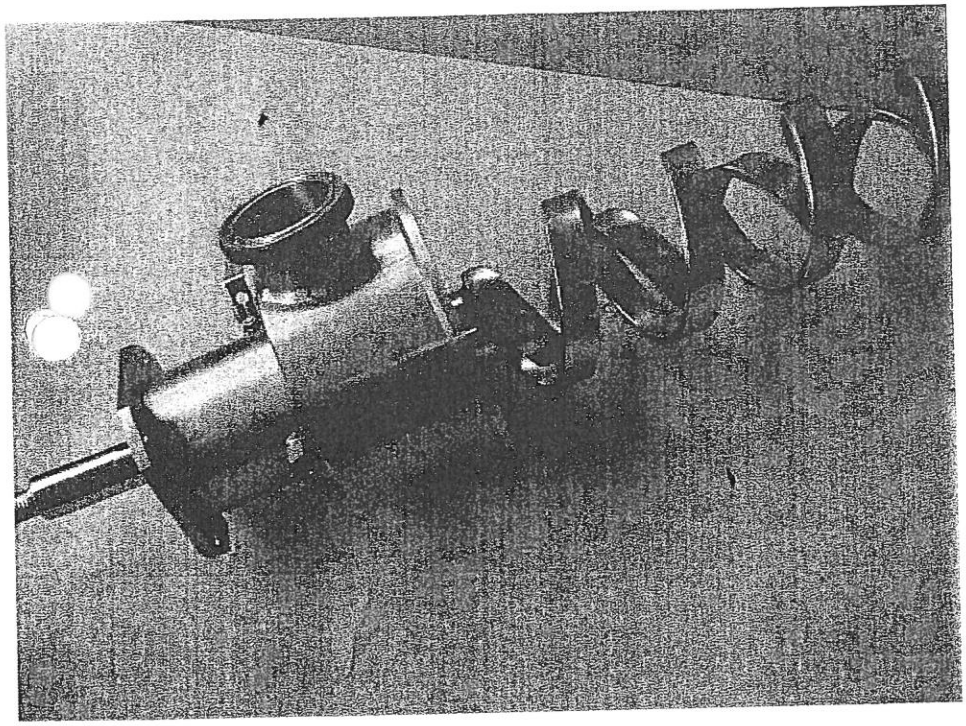

(F) Assembler l'hélice avec le bloc.

(GB) Assemble the impeller with the assembly.

(E) Ensamble la hélice con el bloque.

(D) Die Welle mit dem Block zusammenbauen.

F MONTAGE PARTIE MOBILE DE LA GARNITURE INFERIEURE
GB ASSEMBLY OF LOWER PACKING MOBILE PART
E MONTAR LA PARTE MÓVIL DE LA EMPAQUETADURA INFERIOR
D MONTAGE DES BEWEGLICHEN TEILS DES UNTEREN DICHTUNGSEINSATZES.

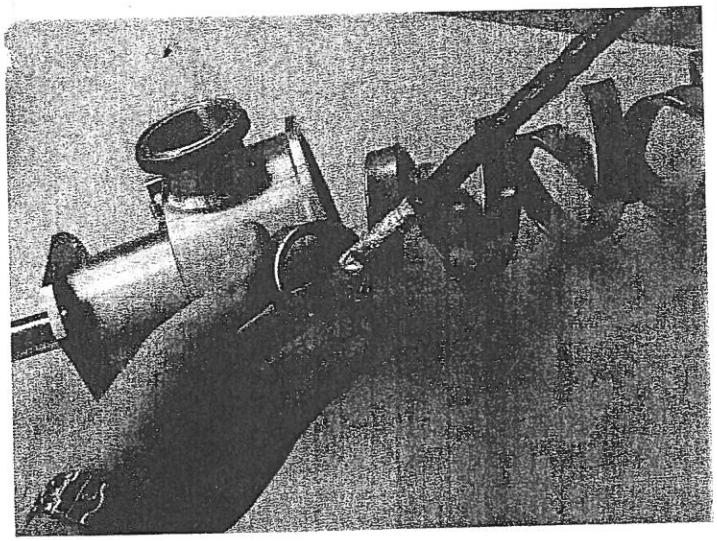

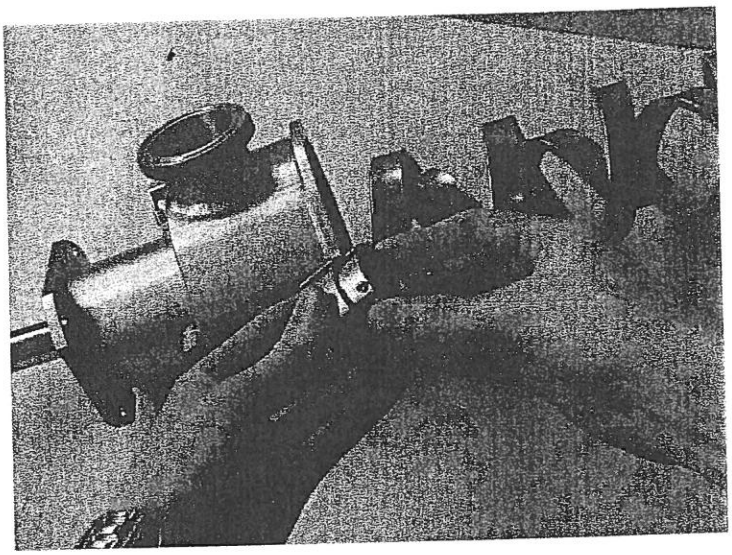

F Graisser la garniture avec de la graisse alimentaire.
GB Grease the packing with food quality grease.
E Engrase la empaquetadura con grasa alimenticia.
D Den Dichtungseinsatz mit Lebensmittelfett schmieren.

F Assembler les deux parties.
GB Assemble the two parts together.
E Ensamble las dos partes.
D Die zwei Teile zusammenbauen.

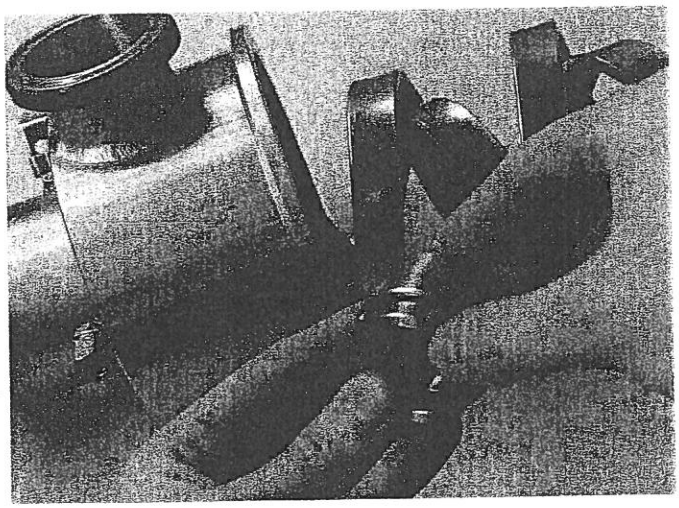

(F) Vérifier le bon d'assemblage de la garniture et la positionner sur l'arbre.

(GB) Check the correct assembly of the packing and position it on the shaft.

(E) Compruebe el orden de ensamblado de la empaquetadura y colóquela en el eje.

(D) Die ordnungsgemäße Montage des Dichtungseinsatzes überprüfen und auf der Spindel positionieren.

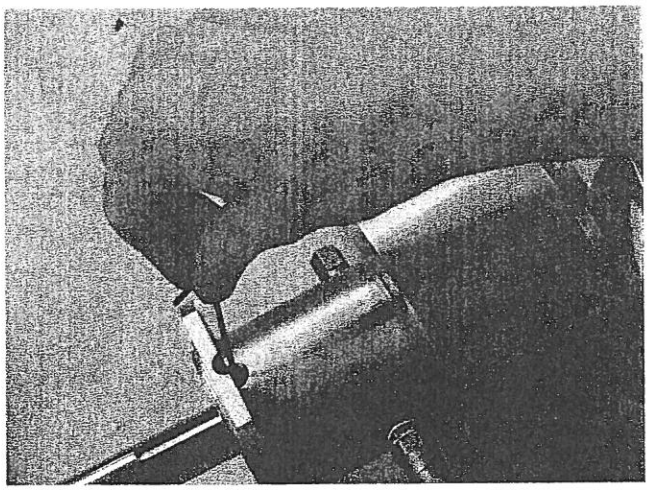

(F) Tirer sur l'arbre pour compresser la garniture.
Vérifier que la vis pointeau est en face de la rainure de l'arbre, Serrer la garniture sur l'arbre, attention il y a deux vis.

(GB) Pull on the shaft to compress the packing. Check that the setscrews are facing the shaft groove. Tighten the packing on the shaft. Be careful, there are two screws

(E) Tire del eje para comprimir la empaquetadura.
Compruebe que el tornillo sujetador esté delante de la ranura del eje. Atornille la empaquetadura al eje, atención hay dos tornillos.

(D) An der Spindel ziehen, um den Dichtungseinsatz zu komprimieren.
Überprüfen, dass die Schraube mit spitzem Ende der Spindelrille gegenüber liegt.
Den Dichtungseinsatz an der Spindel anziehen, Achtung, es sind zwei Schrauben vorhanden.

F REMONTAGE DE LA PARTIE SUPERIEURE
GB REASSEMBLY OF THE UPPER PART
E VOLVER A MONTAR LA PARTE SUPERIOR
D WIEDER ZUSAMMENSETZEN DES OBEREN TEILS

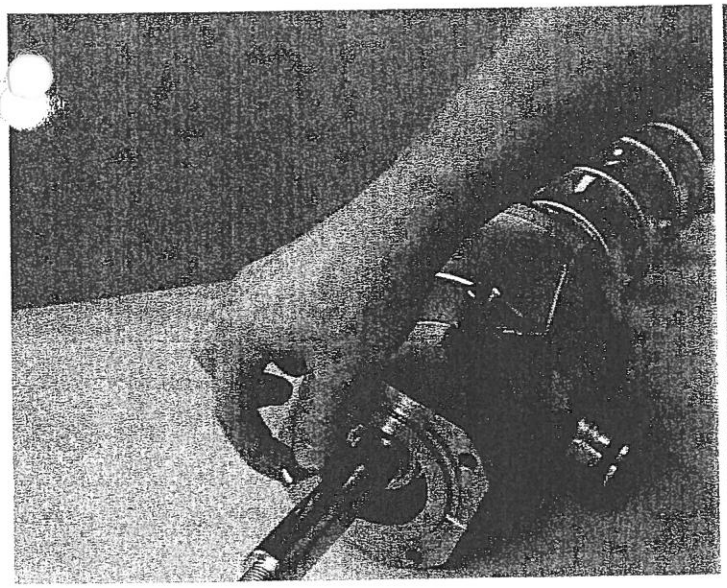

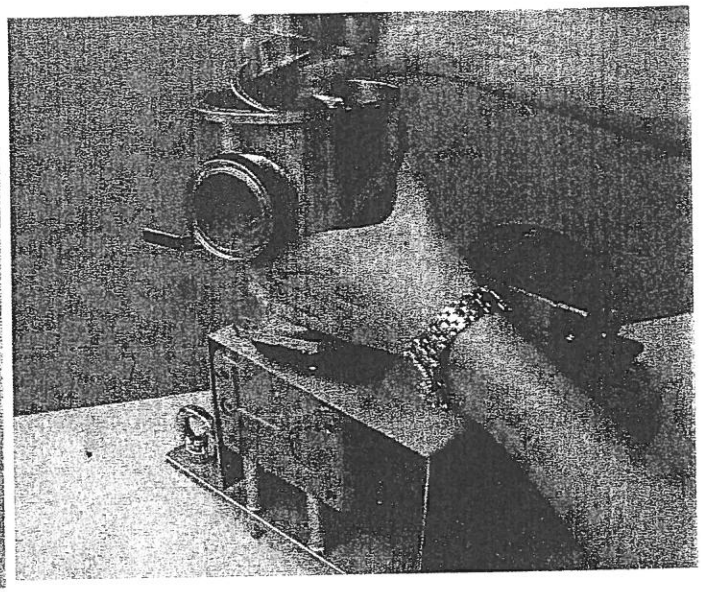

F Graisser l'arbre et mettre la clavette dans son logement.

GB Grease the shaft and put the key in its place.

E Engrase el eje y coloque el pasador en su sitio.

D Die Spindel schmieren und den Keil in seinen Sitz geben.

F Placer l'ensemble dans le moto réducteur et serrer les quatre vis de fixation.

GB Put the assembly in the reduction gearbox and tighten the four attaching screws.

E Coloque el conjunto en el motorreductor y apriete los cuatro tornillos de fijación.

D Das ganze in den Getriebemotor einsetzen und die vier Befestigungsschrauben anziehen.

F **BLOCAGE DE L'HELICE**
GB **LOCKING THE IMPELLER**
E **BLOQUEAR LA HÉLICE**
D **BLOCKIEREN DER WELLE**

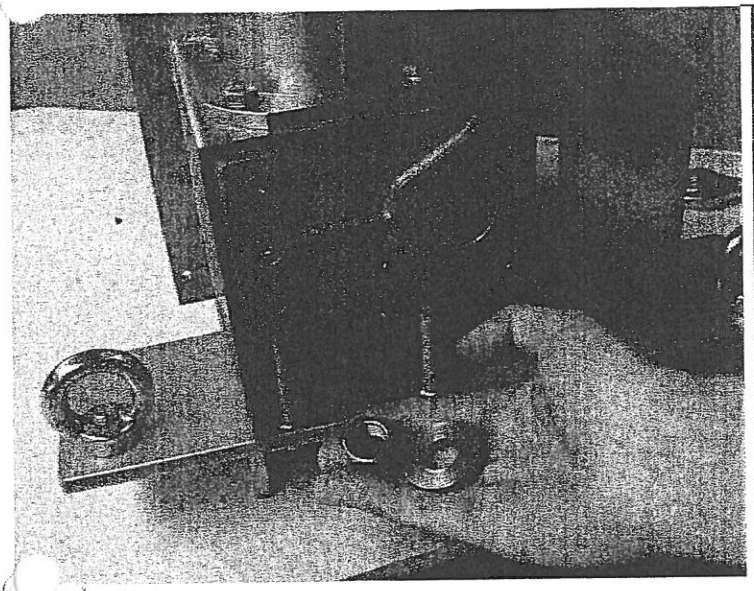

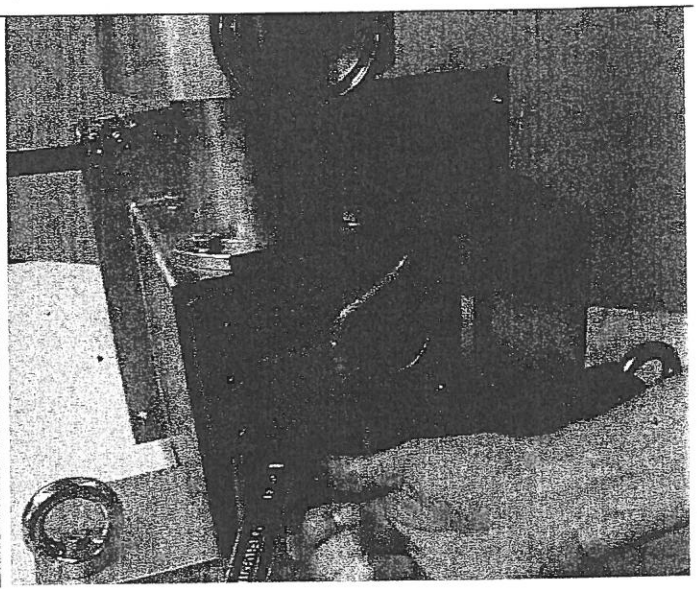

F Remettre la rondelle et l'écrou NYLSTOP.
GB Fit the washer and the NYLSTOP nut.
E Vuelva a colocar la arandela y la tuerca NYLSTOP.
D Die NYLSTOP U-Scheibe und Mutter wieder anbringen.

F Serrer l'ensemble très fortement.
GB Tighten the assembly very firmly.
E Apriete fuertemente el conjunto.
D Das ganze stark anziehen.

F MONTAGE DE L'ENVELLOPPE
GB REASSEMBLY OF CASING
E VOLVER A MONTAR LA CARCASA
D WIEDER ANBRINGEN DER SCHUTZHAUBE

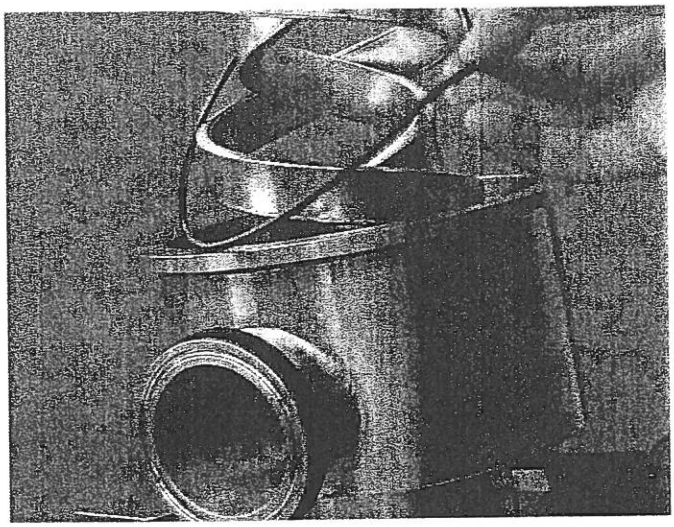

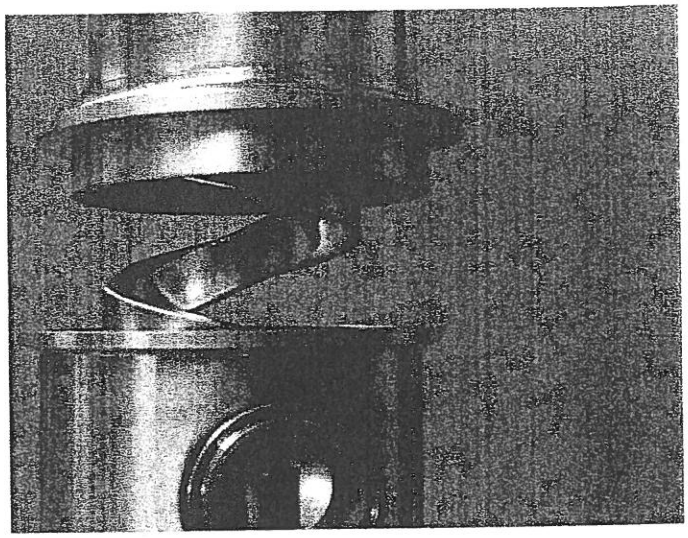

F Remettre le joint torique d'étanchéité.
GB Fit the O-ring.
E Vuelva a colocar la junta tórica de estanqueidad.
D Die O-Ring-Dichtung wieder aufsetzen.

F Remettre l'enveloppe délicatement.
GB Install the casing with care.
E Vuelva a colocar la carcasa cuidadosamente.
D Vorsichtig die Schutzhaube wieder anbringen.

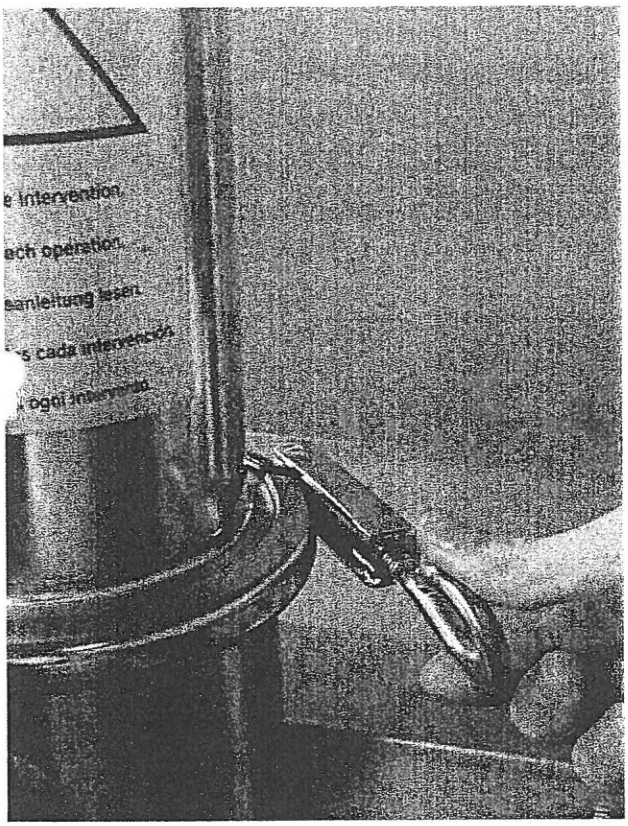

F Remettre et serrer le collier.
GB Fit and tighten the collar.
E Coloque y apriete la abrazadera.
D Die Klemmschelle anbringen und anziehen.

F **ORIENTATION du RACCORD INFERIEUR**
GB **ORIENTATION OF LOWER COUPLING**
E **ORIENTAR LA BOQUILLA INFERIOR**
D **AUSRICHTEN DES INNEREN VERBINDUNGSSTÜCKS**

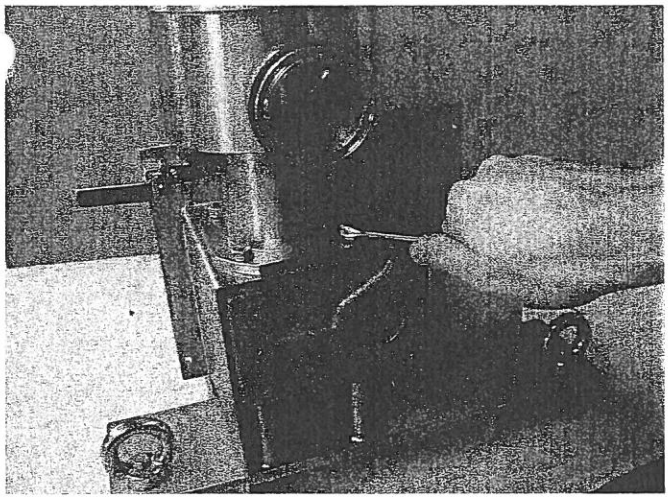

F Desserrer les quatre vis et orienter le raccord.
GB Loosen the four screws and turn the coupling.
E Afloje los cuatro tornillos y oriente la boquilla.
D Die vier Schrauben lösen und das Verbindungsstück ausrichten.

(F) ORIENTARION DU RACCORD SUPERRIEUR
(GB) ORIENTATION OF UPPER COUPLING
(E) ORIENTAR LA BOQUILLA SUPERIOR
(D) AUSRICHTEN DES OBEREN VERBINDUNGSSTÜCKS

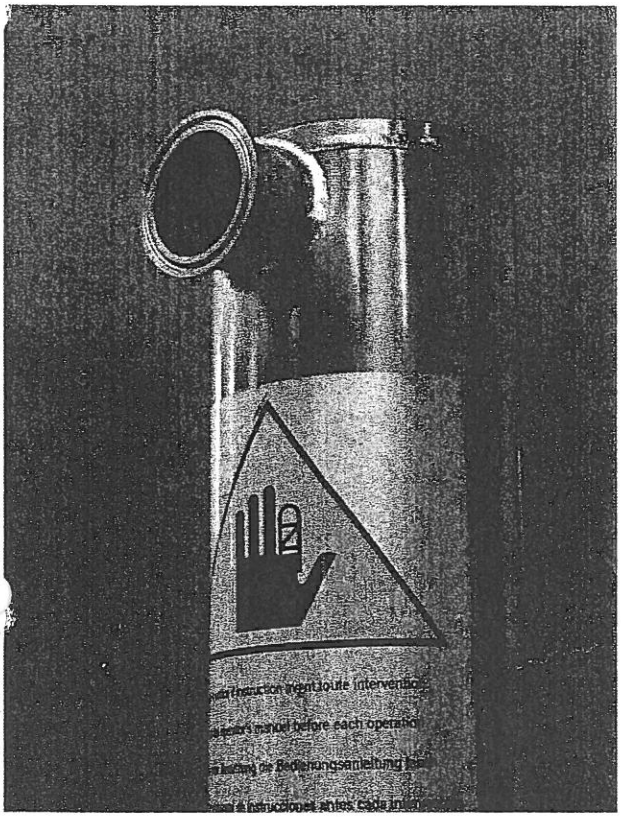

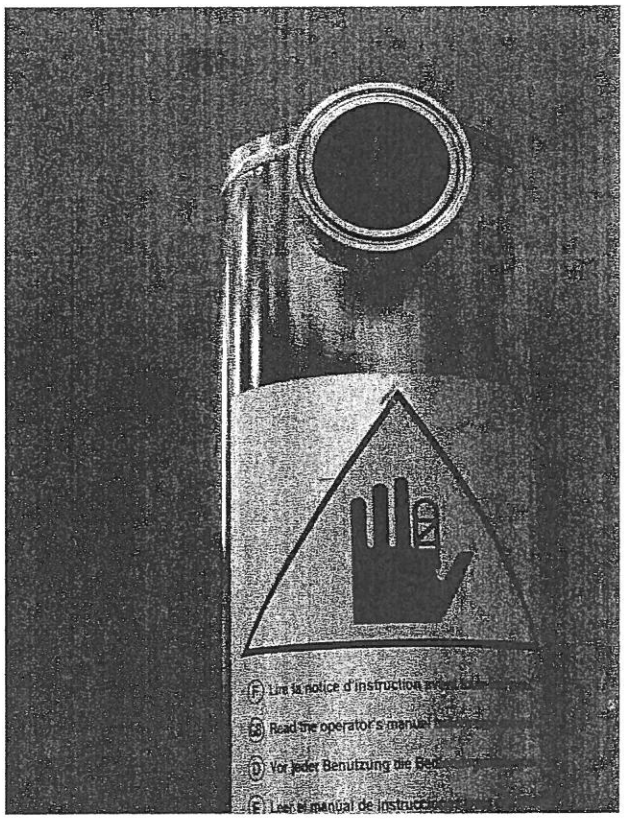

(F) Desserrer le collier de fixation et orienter le raccord.
(GB) Loosen the attaching collar and turn the coupling.
(E) Afloje la abrazadera de fijación y oriente la boquilla.
(D) Die Befestigungsschelle lösen und das Verbindungsstück ausrichten.

(F) Resserrer le collier de fixation.
(GB) Tighten the attaching collar again.
(E) Vuelva a apretar la abrazadera de fijación.
(D) Die Befestigungsschelle wieder anziehen.

MAINTENANCE PLAN

INSPECTION

Making the mixer safe

All maintenance operations must be carried out with the machine at a stop and the power cut off.

Warning

This machine contains parts that can be dangerous under some conditions:
- whenever the inlet or outlet pipes are removed, it is particularly dangerous to insert your fingers into the housing of the mixer.

General inspection

Initial inspection of the mixer is necessary after 300 hours. This inspection consists of the complete disassembly of the mixer and a check of the condition of the wear parts. If no significant wear is observed on initial disassembly, the inspection intervals can be increased by increments of 500 hours.

LUBRICATION

We recommend the use of oil to suit the operating temperature.

For operation between −20°C and +40°C, we advise a synthetic oil such as the PAO (Poly-Alpha-Olefine) Mobil SHC 634 ISO VG 460 type.
The maximum continuous oil temperature shall be 100°C.

For operation between 30°C and −10°C, we advise a synthetic oil such as Mobil SHC 629 ISO VG 150
The maximum continuous oil temperature shall be 90°C.

For operation between -50°C and −30°C, we advise a synthetic oil such as Mobil SHC624 ISO VG 32 or extreme pressure grease, grade NLMGI 00 Total multis EP200
The maximum continuous oil temperature shall be 40°C.

OIL CHANGE

We recommend changing the oil according to the continuous operating temperature.

- at 70°C every 2500 hours
- at 80°C every 12000 hours
- at 90°C every 6000 hours
- at 100°C every 3000 hours

FAULT FINDING

FAULT	REMEDY
Product leakage at hydraulic barrier.	- Check that the NYLSTOP nut is tight on the impeller, - Check the condition of the packing.
Water leakage in vents.	- Check that the NYLSTOP nut is tight on the impeller, - Check the condition of the packing.
Water leakage into product.	- Check that the NYLSTOP nut is tight on the impeller, - Check the condition of the packing, - Check the pressure at the hydraulic barrier.
Leakage and couplings	- Check the couplings are tight, - Check the condition of the seals.
Leakage and casing coupling.	- Check the clamp collar is tight, - Check the state of the O-ring.
Motor thermal fault.	- Check for damp in the motor terminal plate, - Check the motor windings, - Check the motor assembly with respect to the circuit breaker.

FOLIO	DESIGNATION
02	POLARITY
03	POLARITY
04	POLARITY
05	INTERFACE I/O X12
06	INTERFACE I/O X22
07	SECURITY
08	FLOW CONTROLER
09	inputs E0.0 to E0.7
10	inputs E1.0 to E1.7
11	inputs E2.0 to E2.7
12	inputs E3.0 to E3.7
13	outputs A4.0 to A4.7
14	outputs A5.0 to A5.7
15	outputs A6.0 to A6.7
16	outputs A7.0 to A7.7
17	inputs E8.0 to E8.7
18	outputs A8.0 to A8.7
19	CUSTOMER EXCHANGES
20	NEUMATIC
21	TERMINAL : X0 X0 - 1/1
22	TERMINAL : X1 X1 - 1/1
23	TERMINAL : X10 X10 - 1/1
24	TERMINAL : XD XD - 1/1
25	TERMINAL : XDM1 XDM1 - 1/1
26	TERMINAL : XDM2 XDM2 - 1/1
27	TERMINAL : XE XE - 1/1
28	TERMINAL : XR XR - 1/0
29	Nomenclature (Rep./Folio/Design.Ang/Ref./Fab./Gpic)
30	Nomenclature (Rep./Folio/Design.Ang/Ref./Fab./Gpic)
31	Nomenclature (Rep./Folio/Design.Ang/Ref./Fab./Gpic)

TETRA PACK

IND	MODIFICATION	VISA	DATE

DESSINE	PCM DOSYS	DATE CREATION	23/07/2003
APPROUVE	PCM DOSYS	DATE APPROBATION	22-12-2003
VERIFIE	PCM DOSYS	DATE VERIFICATION	22-12-2003

CE DOSSIER A ETE REALISE AVEC LE LOGICIEL SEE WORLDWIDE d'IGE+XAO

DOSYS des pompes au process

PCM - DOSYS
10 RUE MEGE MOURIES
ZA DU BEL AIR
BP 101
78513 RAMBOUILLET CEDEX
TEL: 01 30 46 50 00
FAX: 01 34 94 92 83

No D'AFFAIRE: CD057-00

NBRE TOTAL DE FOLIOS	FOLIO
31	01

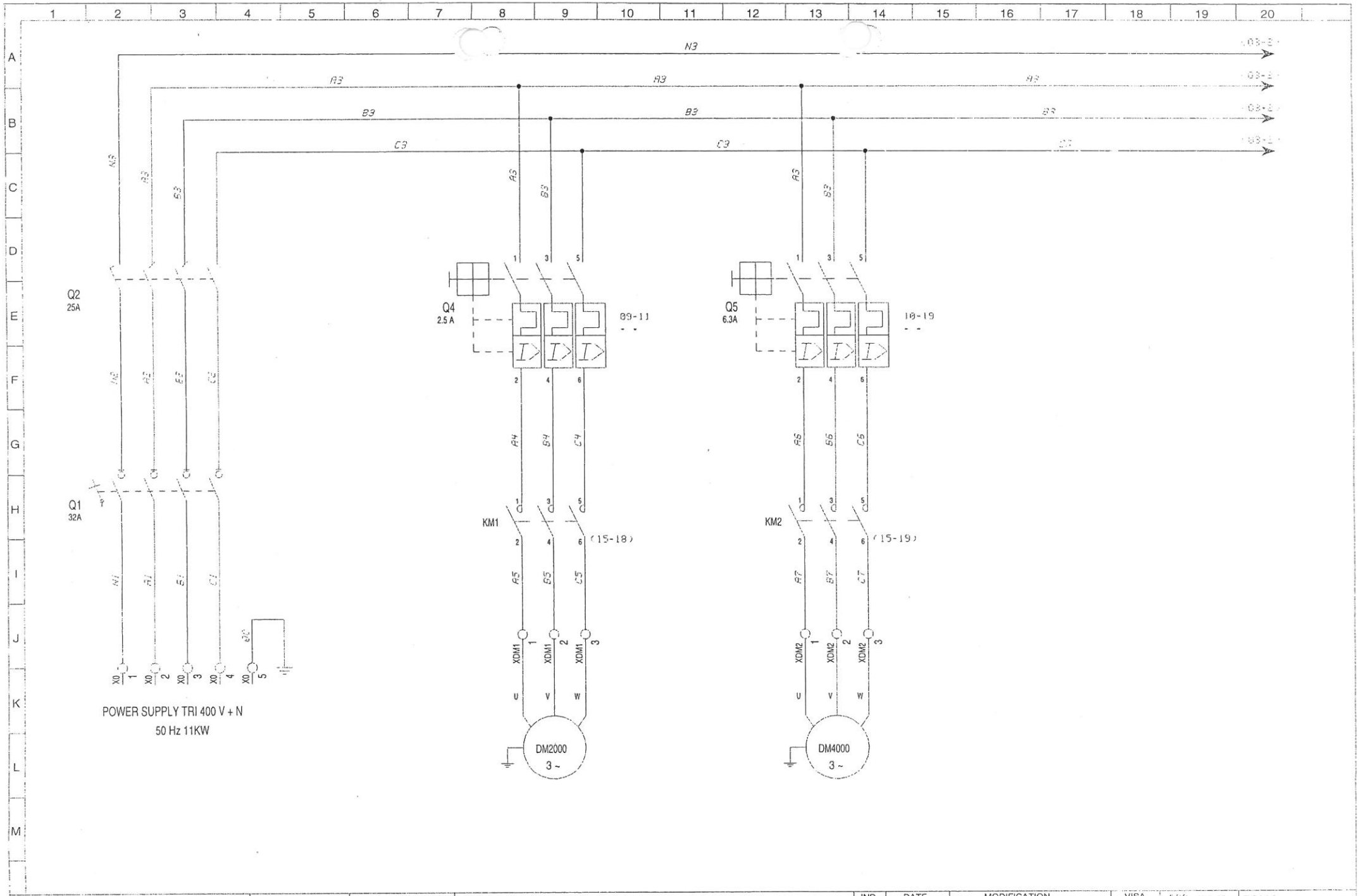

DOSYS Des pompes au process	DESSINE PAR PCM DOSYS	DATE DE CREATION 23/07/2003	TETRA PACK POLARITY	IND	DATE	MODIFICATION	VISA	TEE WORLDWIDE IGE+XAO	FOLIO: 02
	VERIFIE PAR PCM DOSYS	DATE DE VERIFICATION 22-12-2003							CD057-00

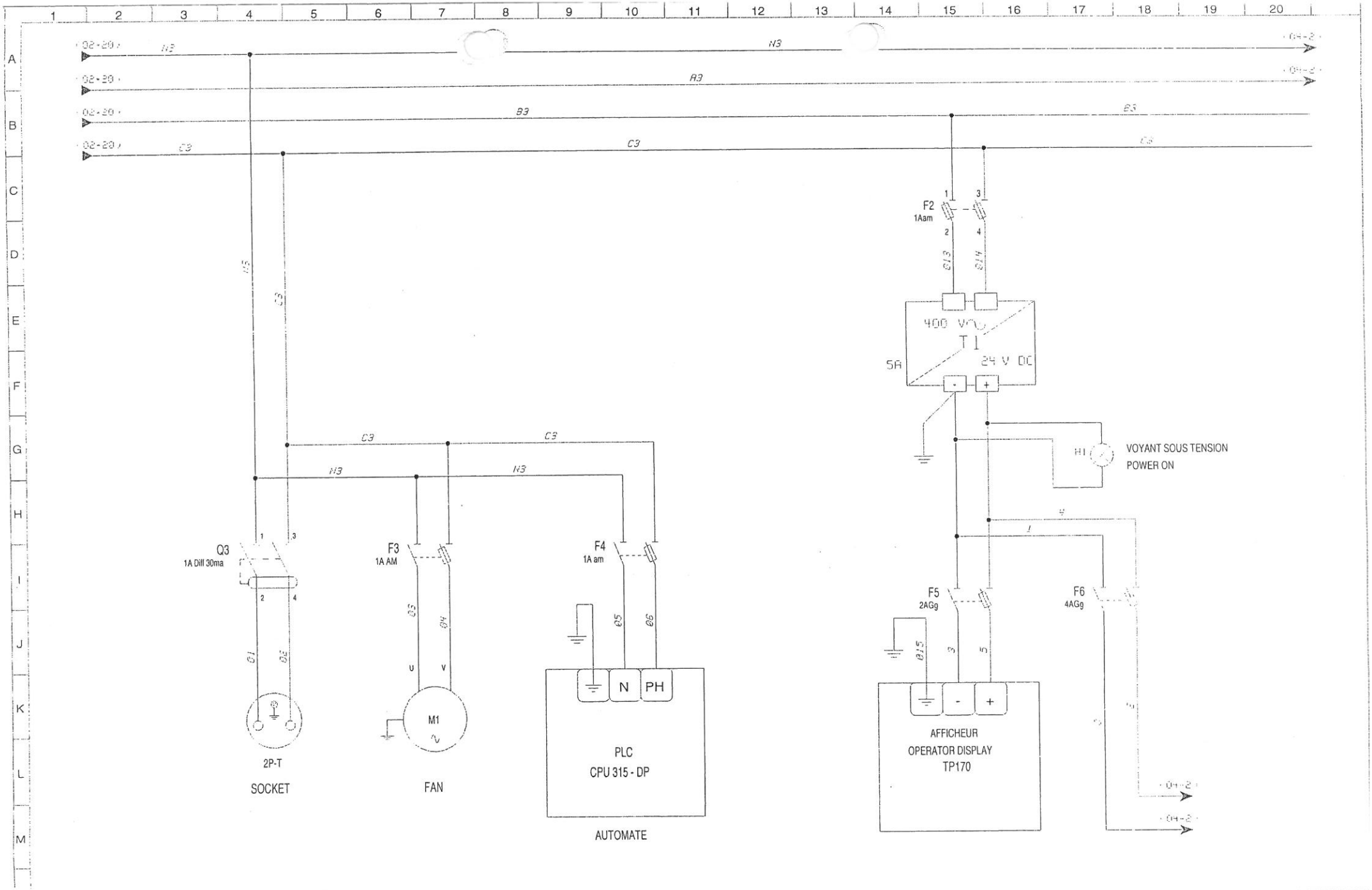

DOSYS des pompes au process	DESSINE PAR PCM DOSYS	DATE DE CREATION 23/07/2003	TETRA PACK POLARITY	IND	DATE	MODIFICATION	VISA	FOLIO: 03
	VERIFIE PAR PCM DOSYS	DATE DE VERIFICATION 24-12-2003						CD057-00

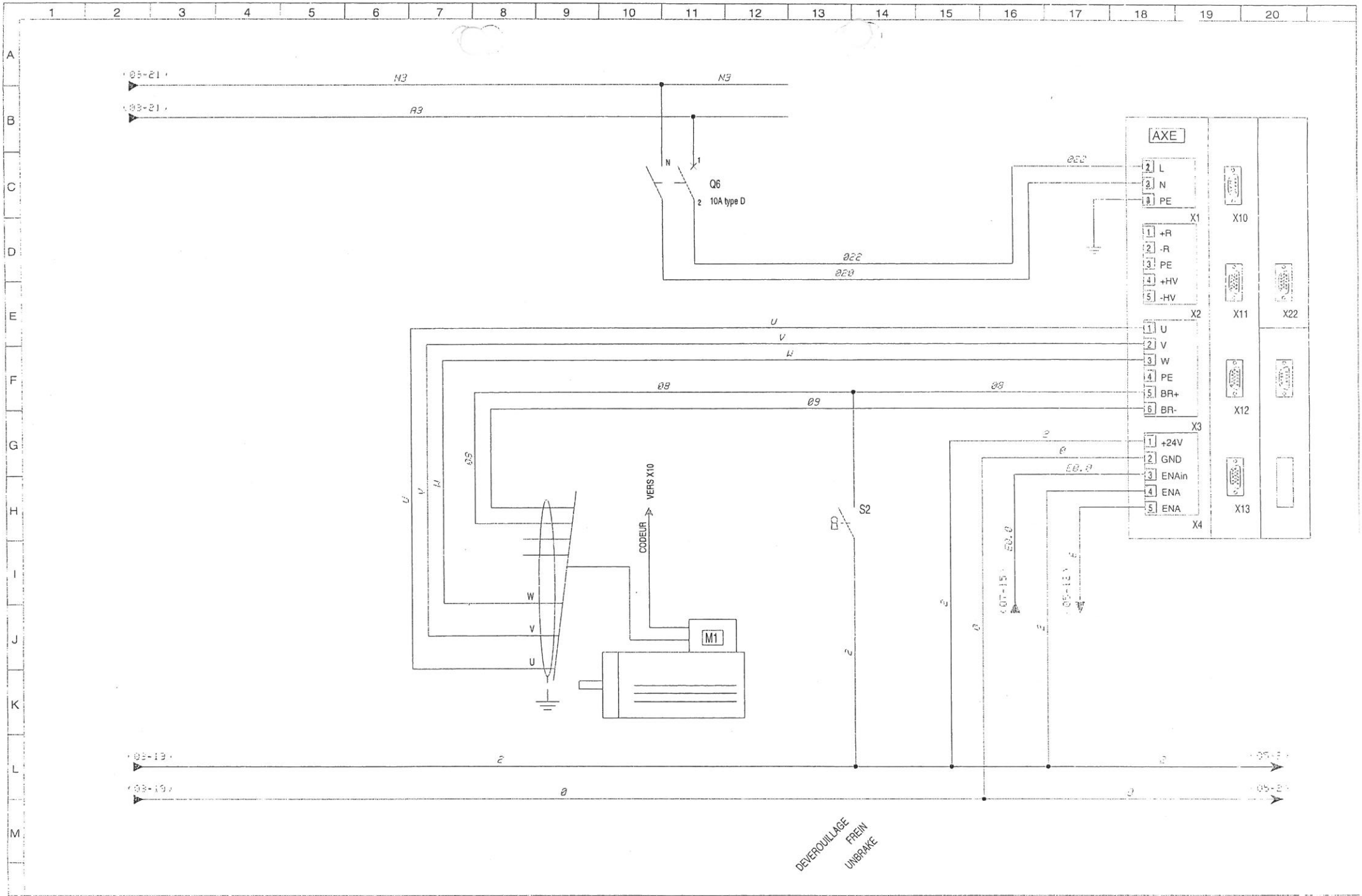

DOSYS Des pompes au process	DESSINE PAR PCM DOSYS	DATE DE CREATION 23/07/2003	TETRA PACK POLARITY	IND	DATE	MODIFICATION	VISA	SEW WORLDWIDE IGE+XAO / FOLIO: 04
	VERIFIE PAR PCM DOSYS	DATE DE VERIFICATION 24-12-2003						CD057-00

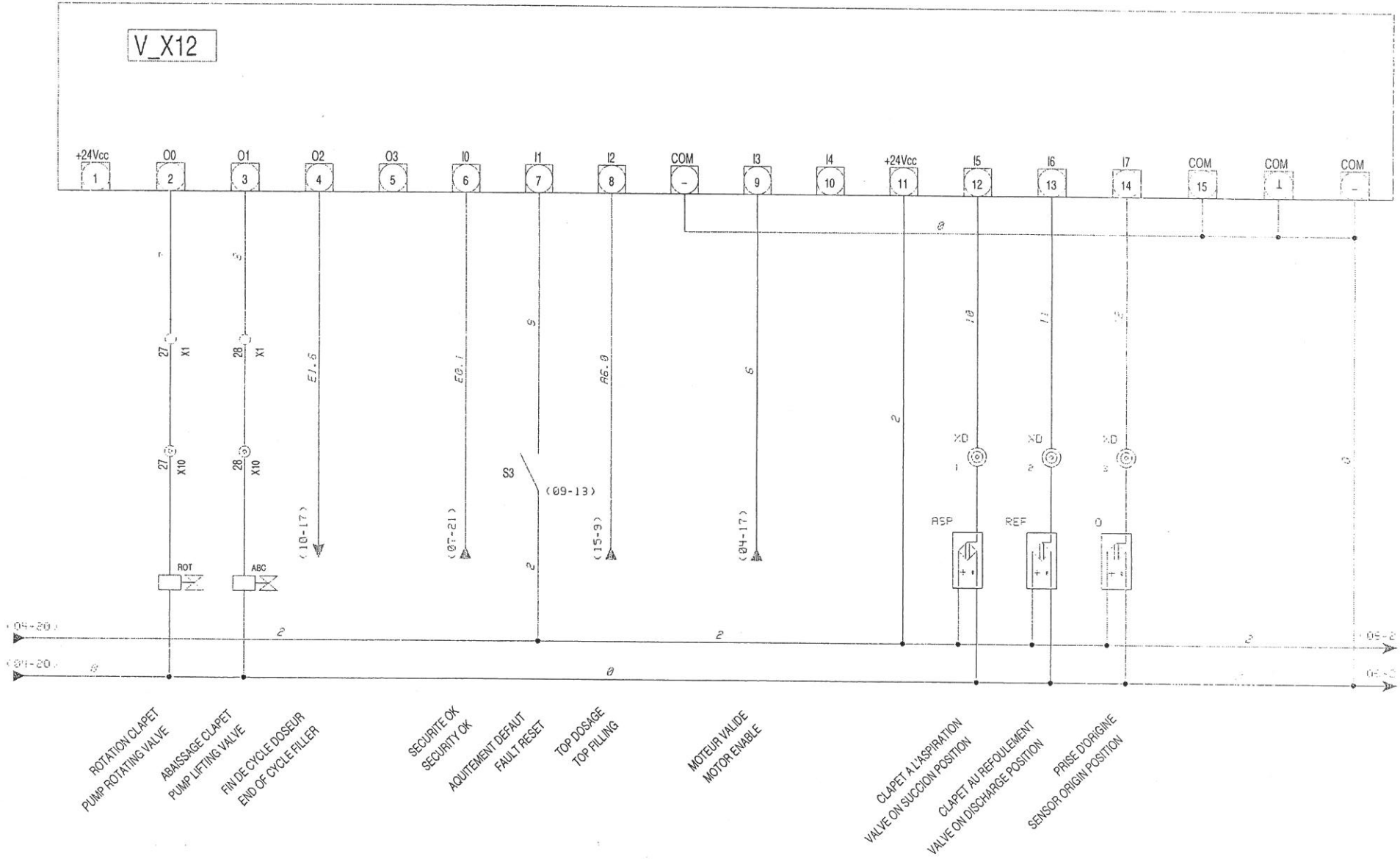

DOSYS Des pompes au process	DESSINE PAR PCM DOSYS	DATE DE CREATION 23/07/2003	TETRA PACK INTERFACE I/O X12	IND	DATE	MODIFICATION	VISA	SEC WORLDWIDE IGE+XAO
	VERIFIE PAR PCM DOSYS	DATE DE VERIFICATION 24-12-2003						FOLIO: 05
								CD057-00

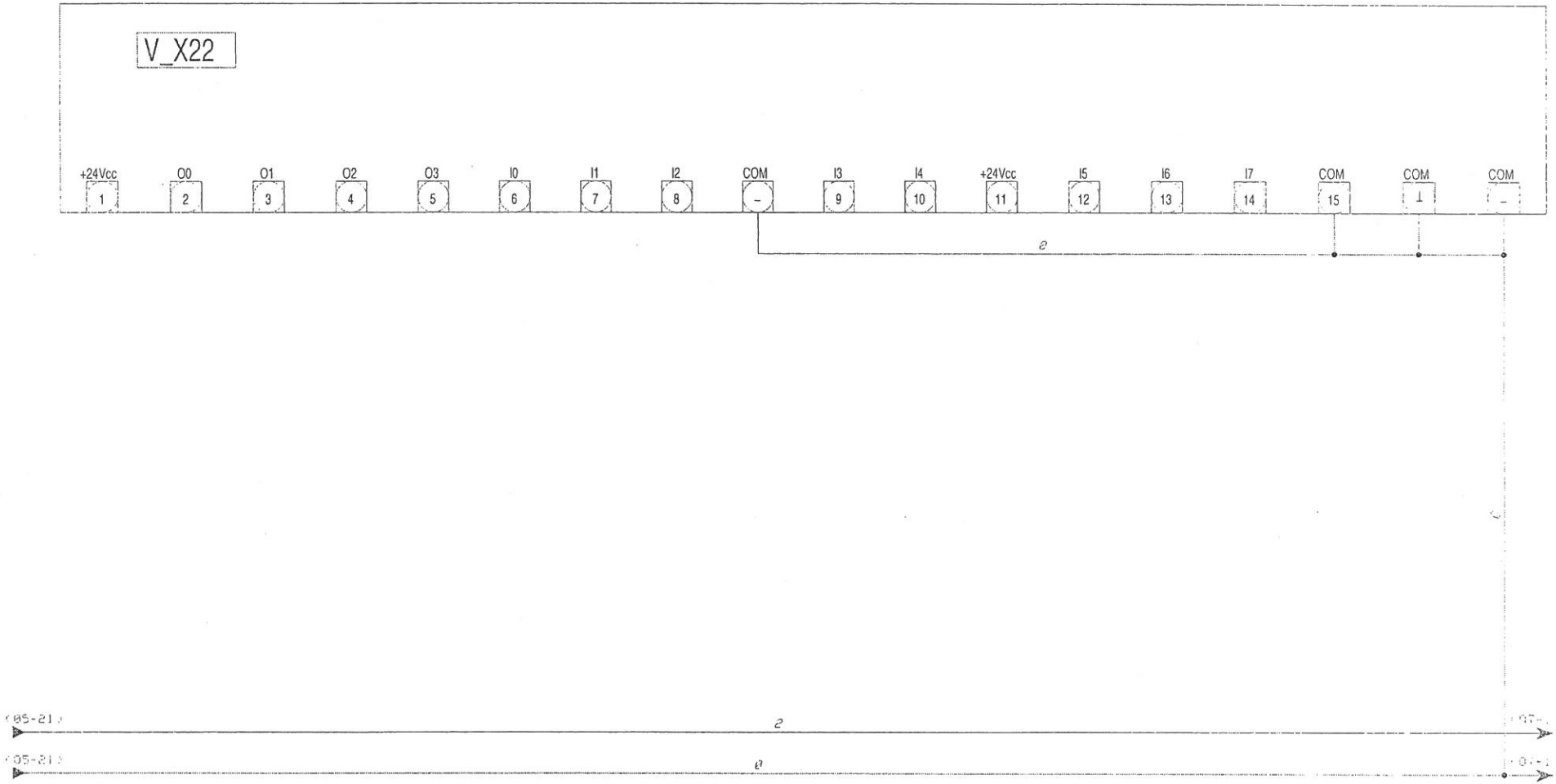

DOSYS Des pompes au process	DESSINE PAR PCM DOSYS	DATE DE CREATION 23/07/2003	TETRA PACK INTERFACE I/O X22	IND	DATE	MODIFICATION	VISA	see WORLDWIDE IGE+XAO	FOLIO: 06
	VERIFIE PAR PCM DOSYS	DATE DE VERIFICATION 22-12-2003							CD057-00

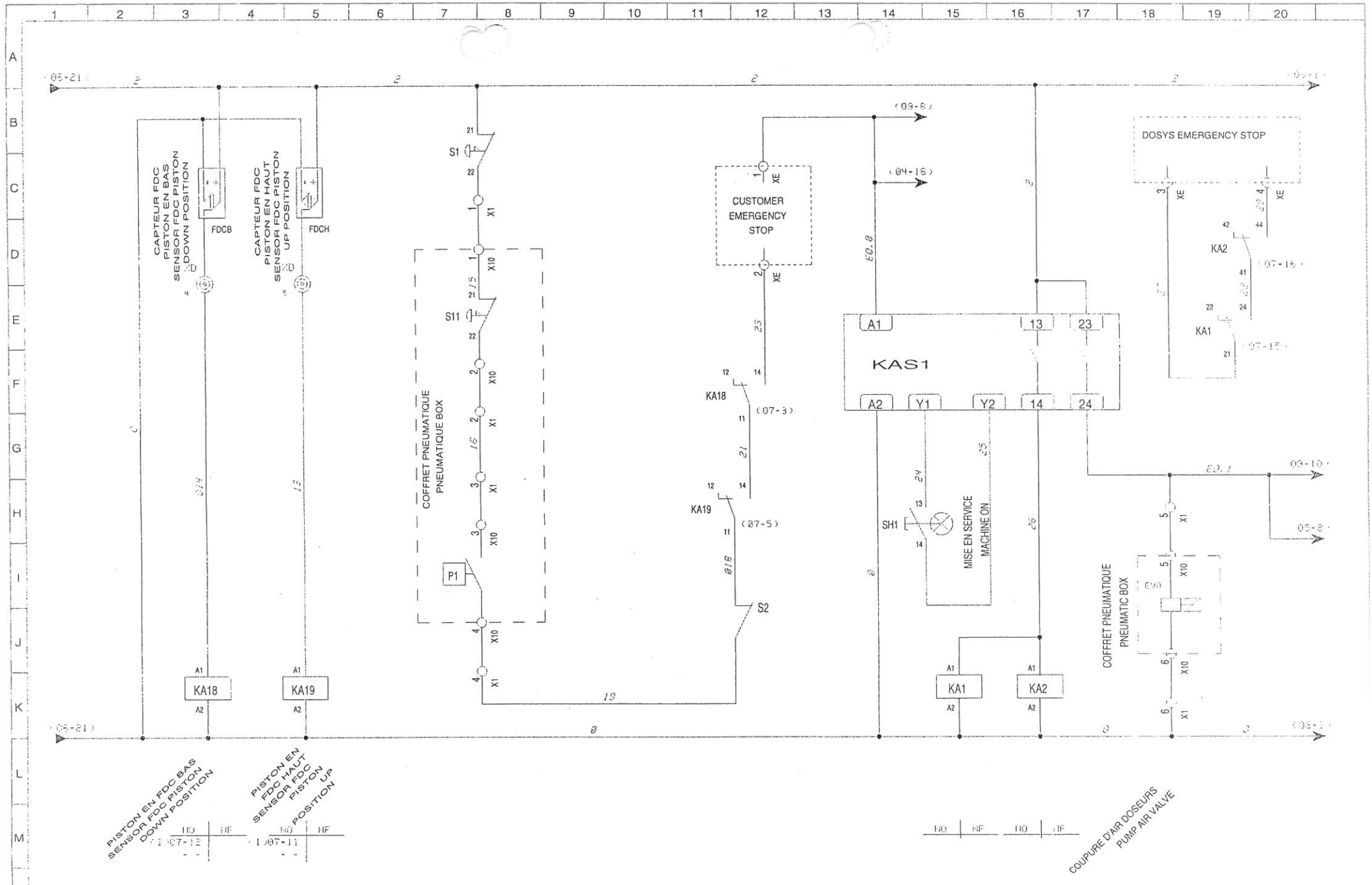

DOSYS Des pompes au procédé	DESSINE PAR PCM DOSYS	DATE DE CREATION 23/07/2003	TETRA PACK SECURITY	IND	DATE	MODIFICATION	VISA	IGE-XAO	FOLIO: 07
	VERIFIE PAR PCM DOSYS	DATE DE VERIFICATION 24-12-2003							CD057-00

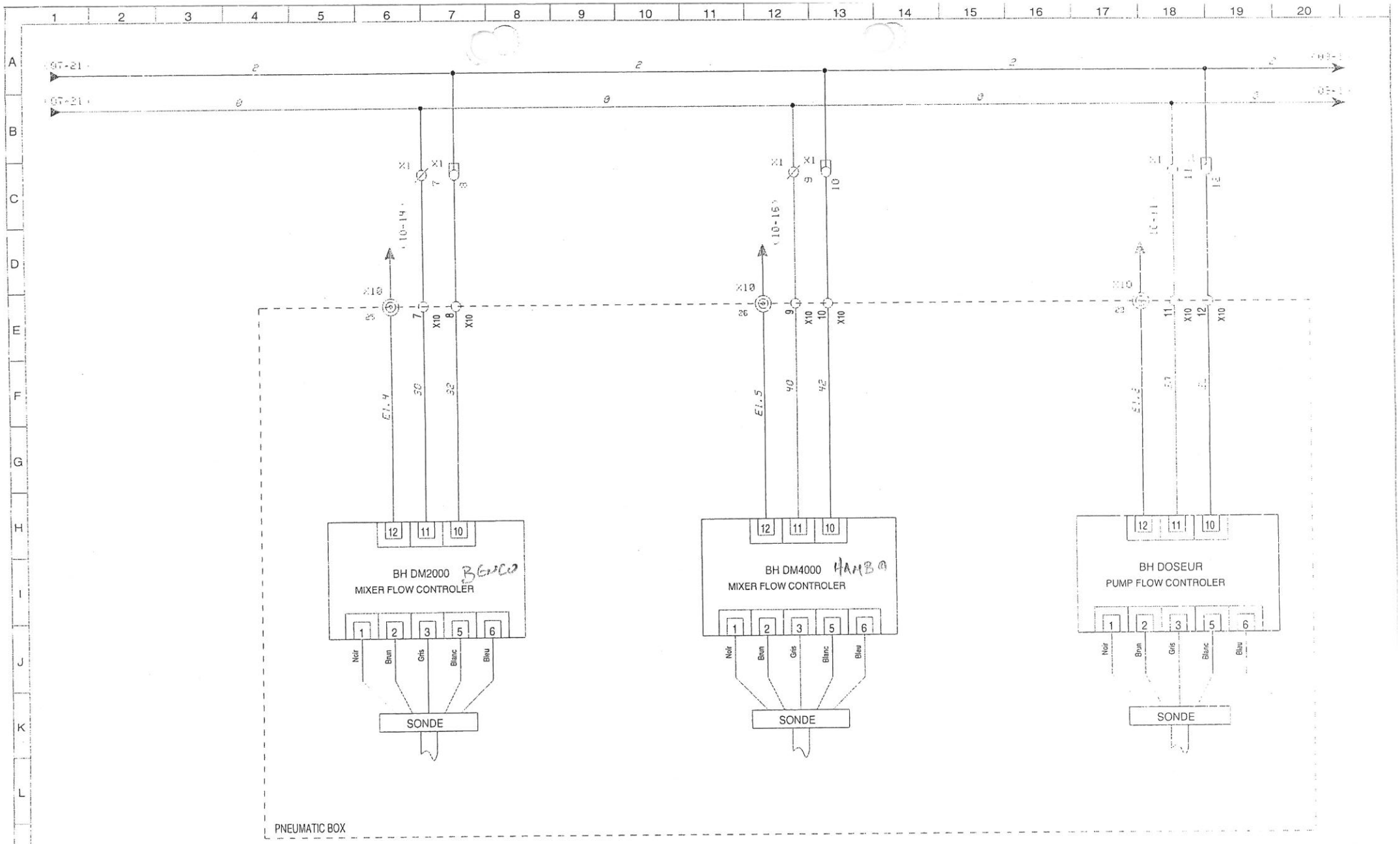

DOSYS Des pompes au process	DESSINE PAR PCM DOSYS	DATE DE CREATION 23/07/2003	TETRA PACK FLOW CONTROLER	IND	DATE	MODIFICATION	VISA	SEE WORLDWIDE IGE+XAO	FOLIO: 08
	VERIFIE PAR PCM DOSYS	DATE DE VERIFICATION 22-12-2003							CD057-00

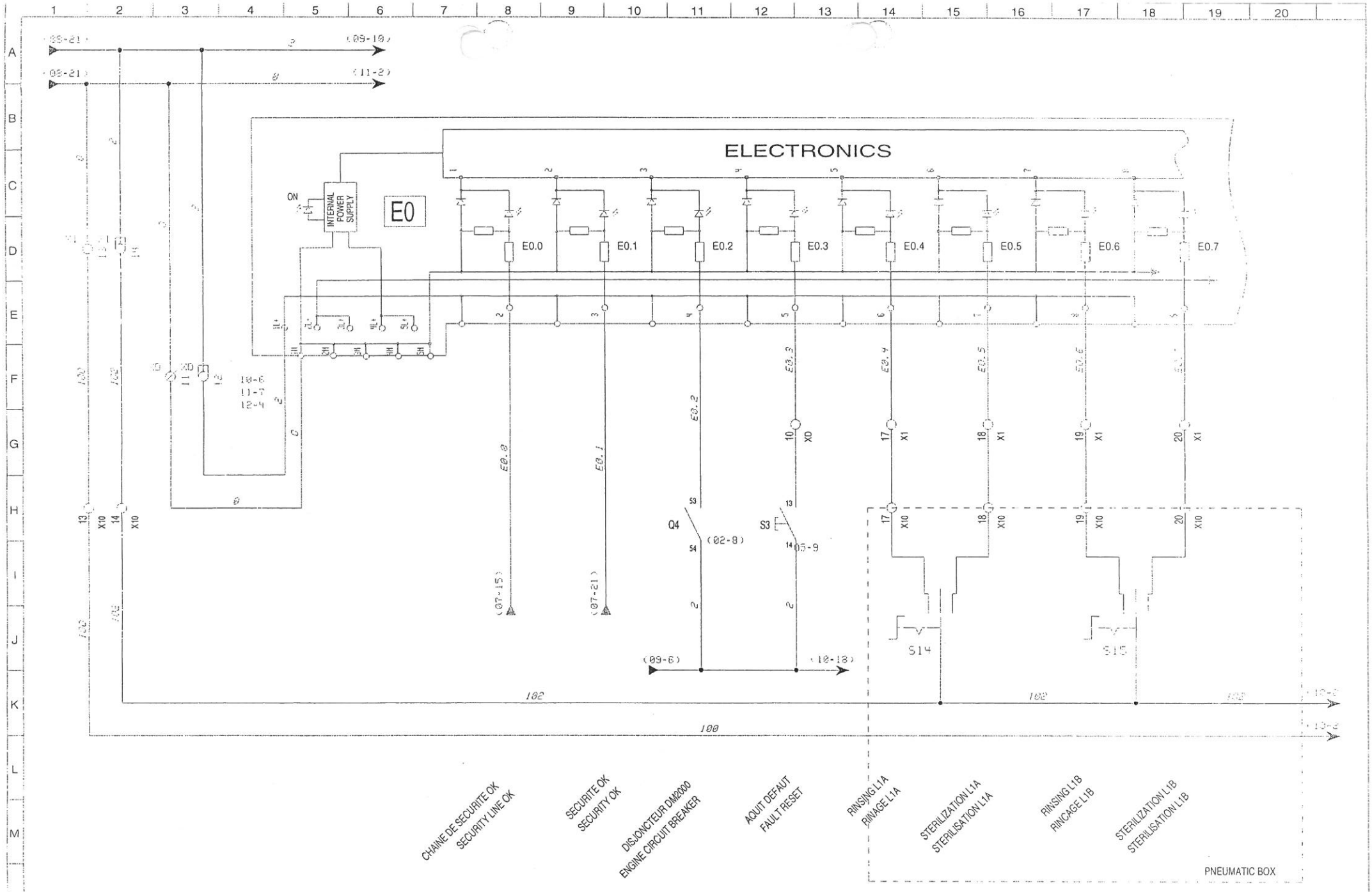

DOSYS Des pompes au process	DESSINE PAR PCM DOSYS	DATE DE CREATION 23/07/2003	TETRA PACK inputs E0.0 to E0.7	IND	DATE	MODIFICATION	VISA	FOLIO: 09
	VERIFIE PAR PCM DOSYS	DATE DE VERIFICATION 22-12-2003						CD057-00

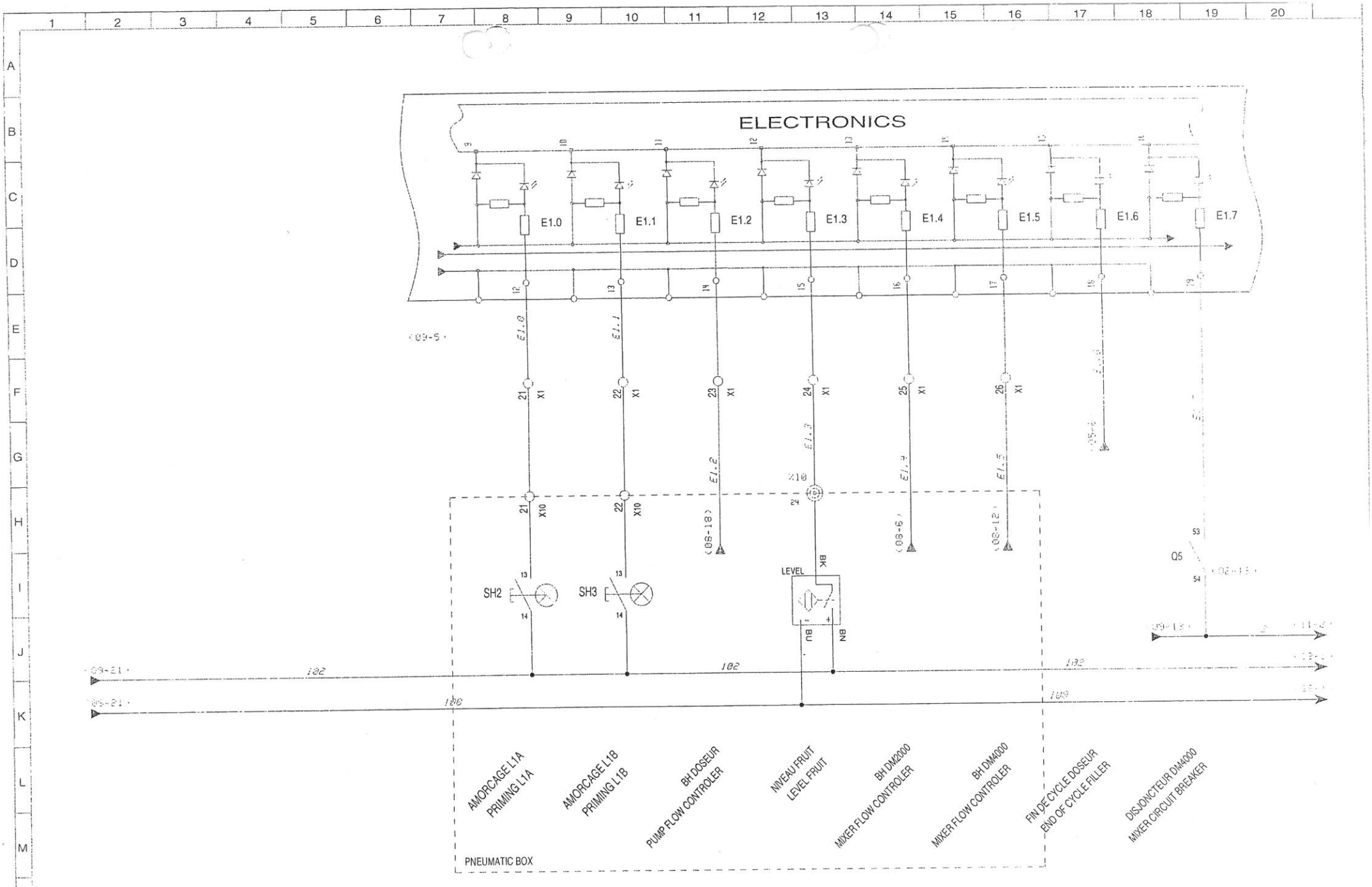

DOSYS Des pompes au procédé	DESSINE PAR PCM DOSYS	DATE DE CREATION 23/07/2003	TETRA PACK inputs E1.0 to E1.7	IND	DATE	MODIFICATION	VISA	IGE WORLDWIDE IGE+XAO	FOLIO: 10
	VERIFIE PAR PCM DOSYS	DATE DE VERIFICATION 22-12-2003							CD057-00

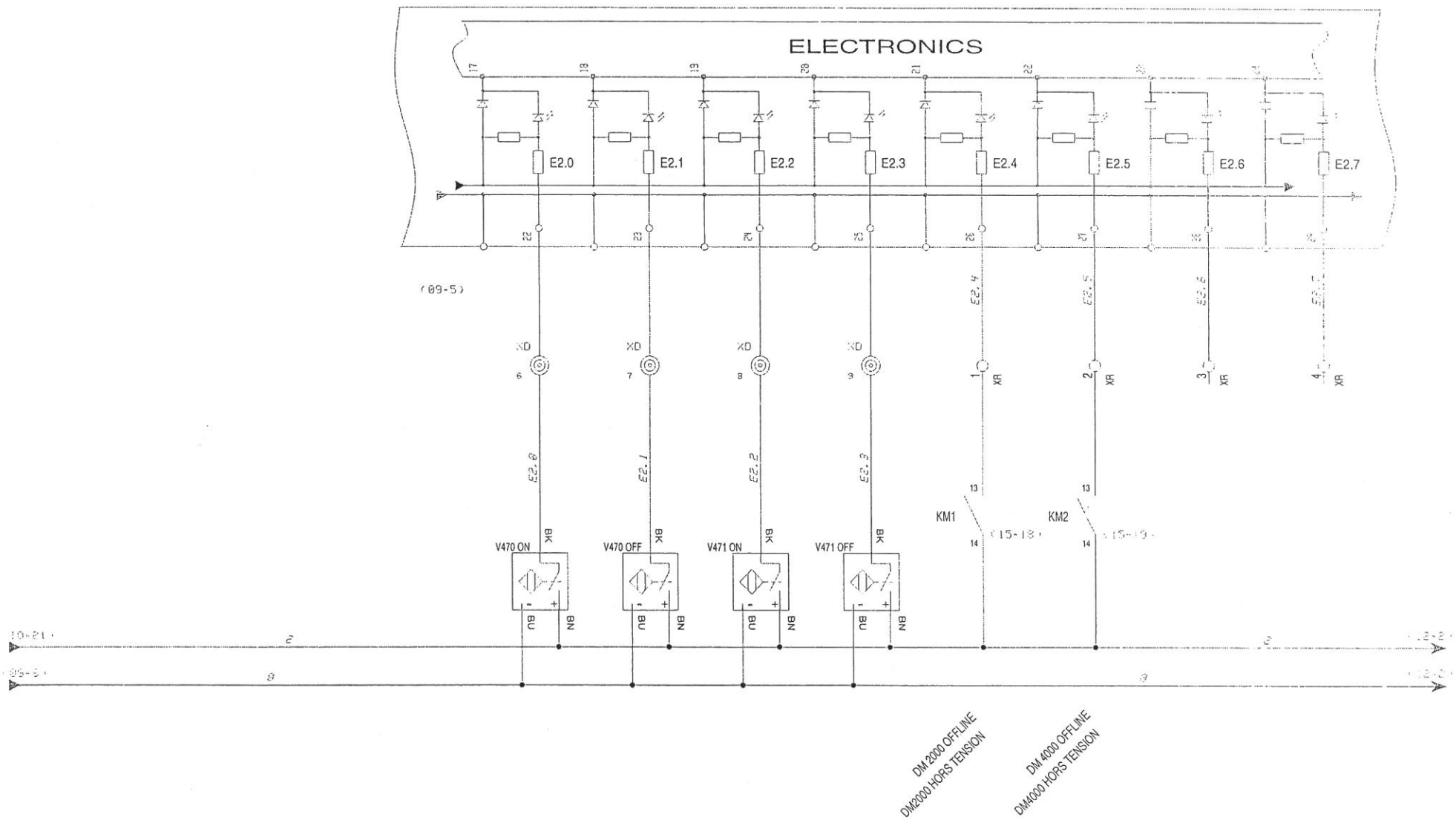

DOSYS Des pompes au process	DESSINE PAR PCM DOSYS	DATE DE CREATION 23/07/2003	TETRA PACK inputs E2.0 to E2.7	IND	DATE	MODIFICATION	VISA	CEE WORLDWIDE IGE+XAO	FOLIO: 11
	VERIFIE PAR PCM DOSYS	DATE DE VERIFICATION 22-12-2003							CD057-00

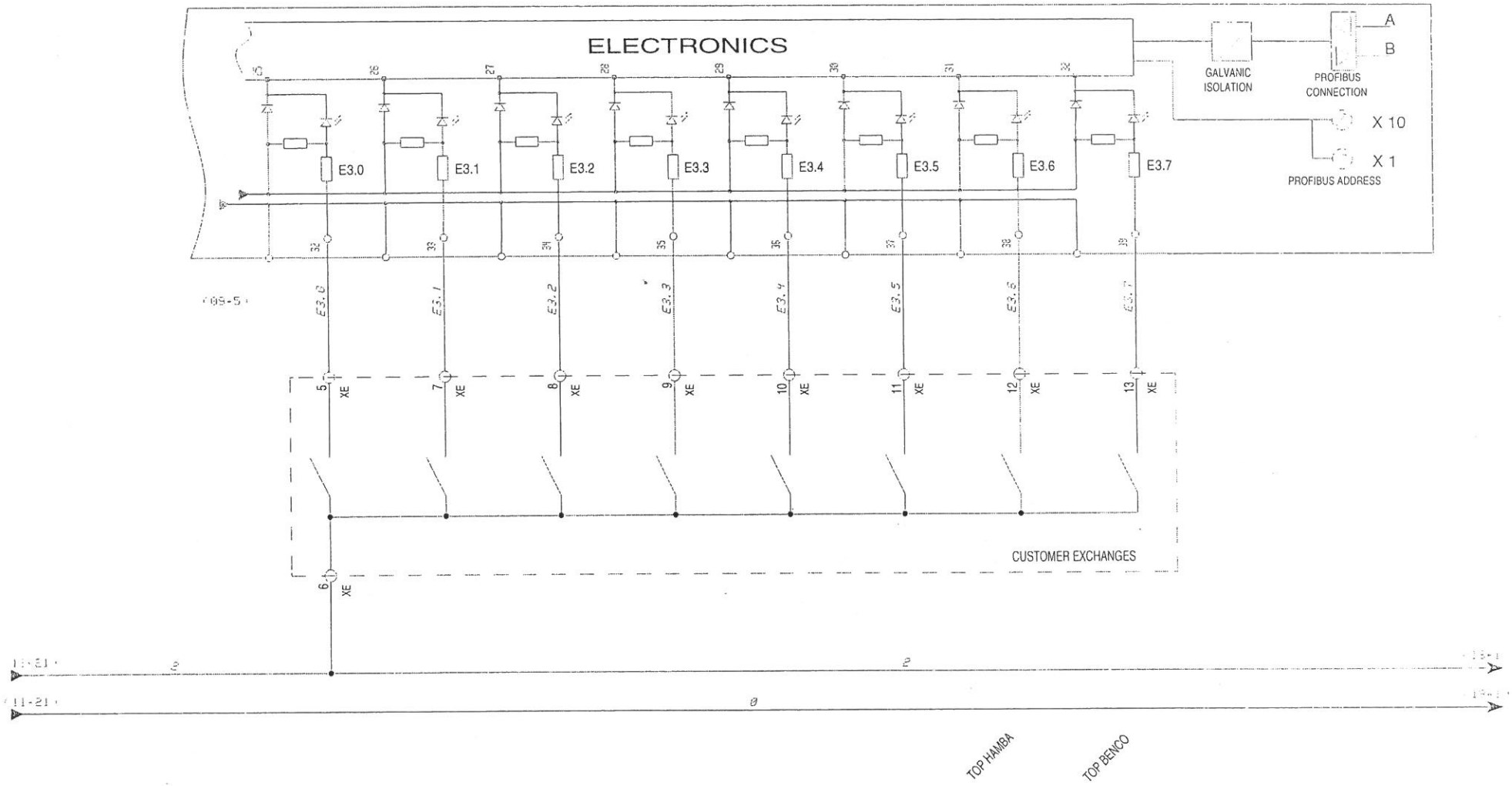

DOSYS Des pompes au process	DESSINE PAR PCM DOSYS	DATE DE CREATION 23/07/2003	TETRA PACK inputs E3.0 to E3.7	IND	DATE	MODIFICATION	VISA	SEC WORLDWIDE IGE+XAO	FOLIO: 12
	VERIFIE PAR PCM DOSYS	DATE DE VERIFICATION 22-12-2003							CD057-00

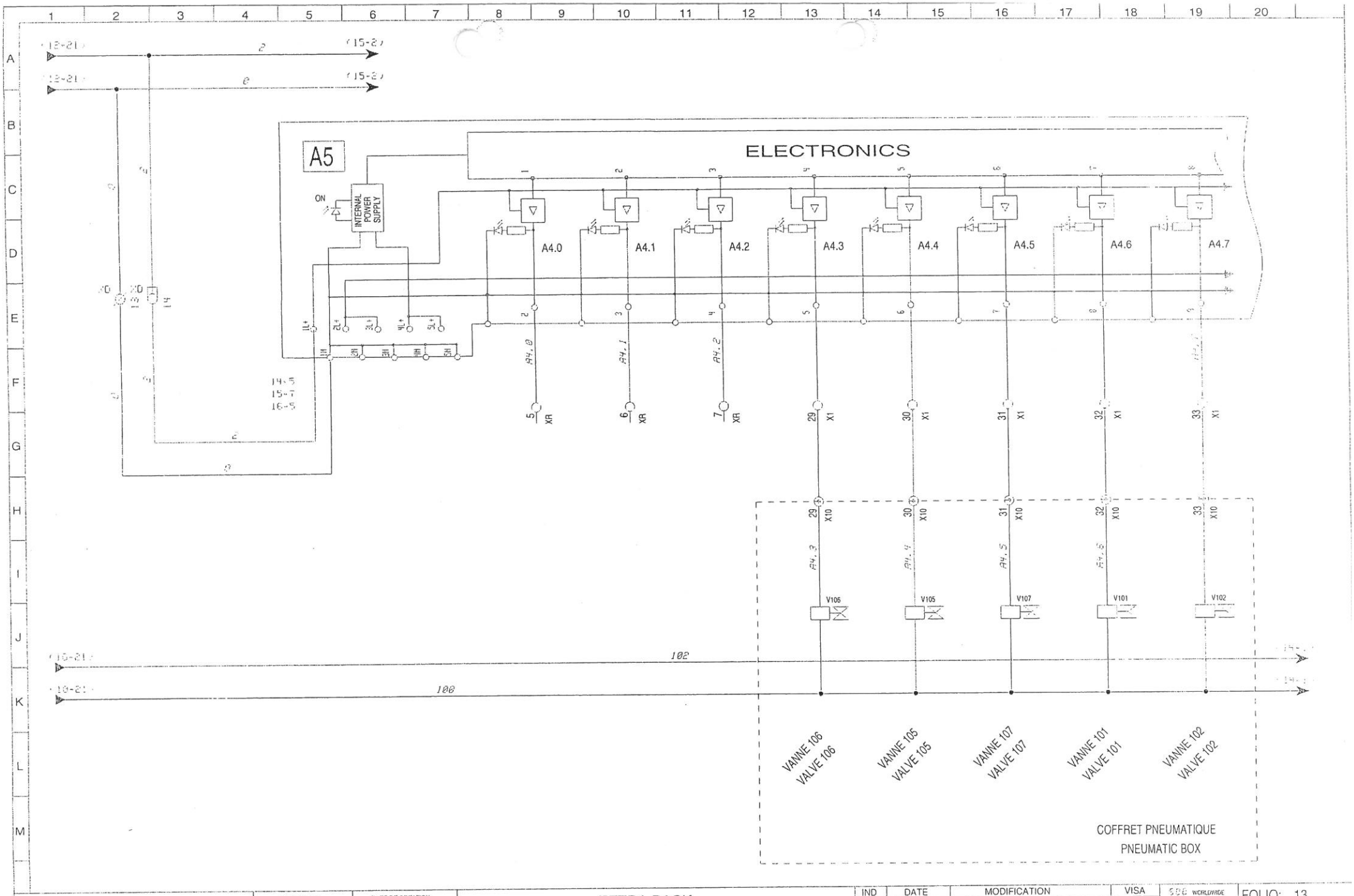

DOSYS Des pompes au process	DESSINE PAR PCM DOSYS	DATE DE CREATION 23/07/2003	TETRA PACK outputs A4.0 to A4.7	IND	DATE	MODIFICATION	VISA	SBB WORLDWIDE IGE+XAO	FOLIO: 13
	VERIFIE PAR PCM DOSYS	DATE DE VERIFICATION 22-12-2003							CD057-00

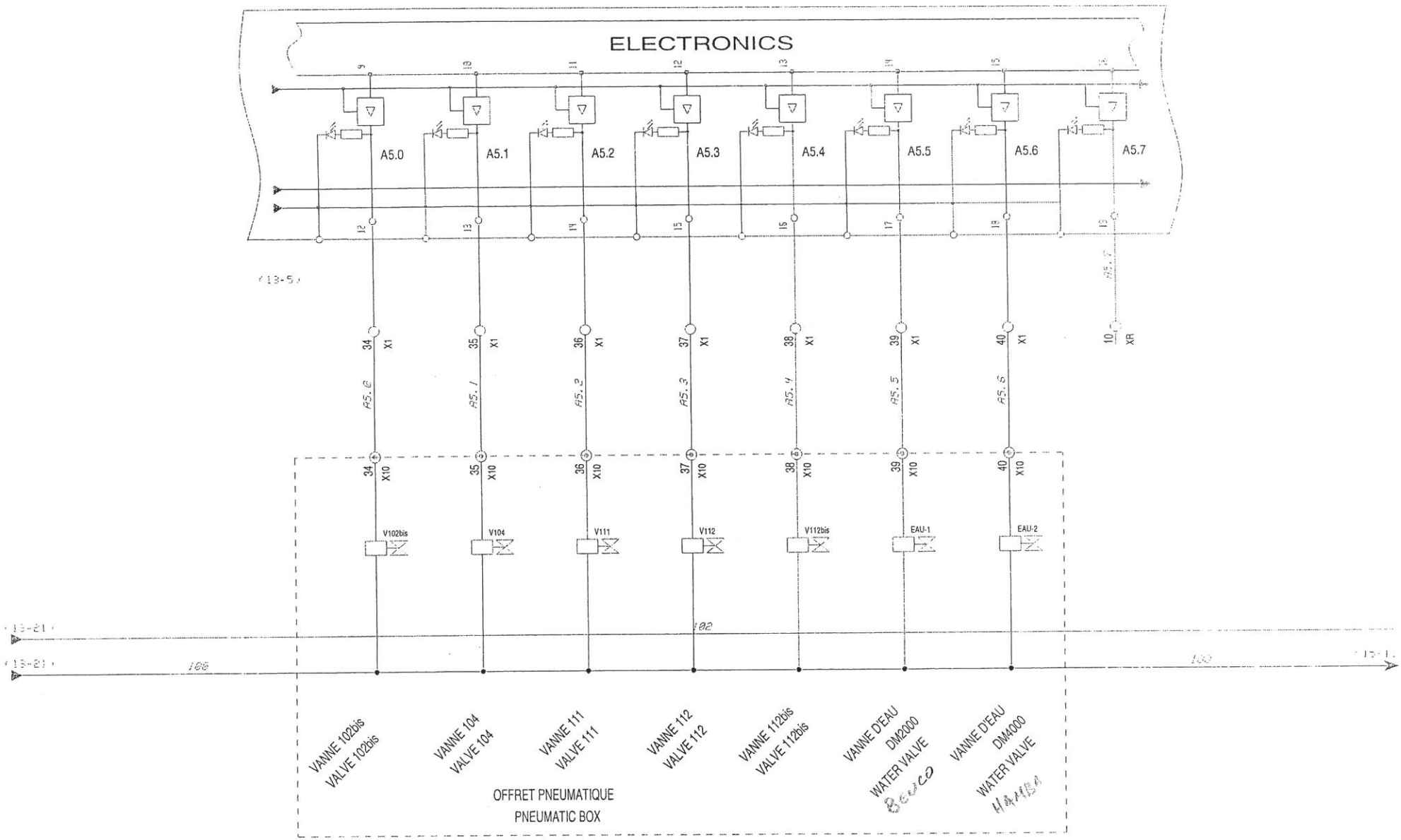

DOSYS	DESSINE PAR PCM DOSYS	DATE DE CREATION 23/07/2003	TETRA PACK outputs A5.0 to A5.7	IND	DATE	MODIFICATION	VISA	FOLIO: 14
	VERIFIE PAR PCM DOSYS	DATE DE VERIFICATION 22-12-2003						CD057-00

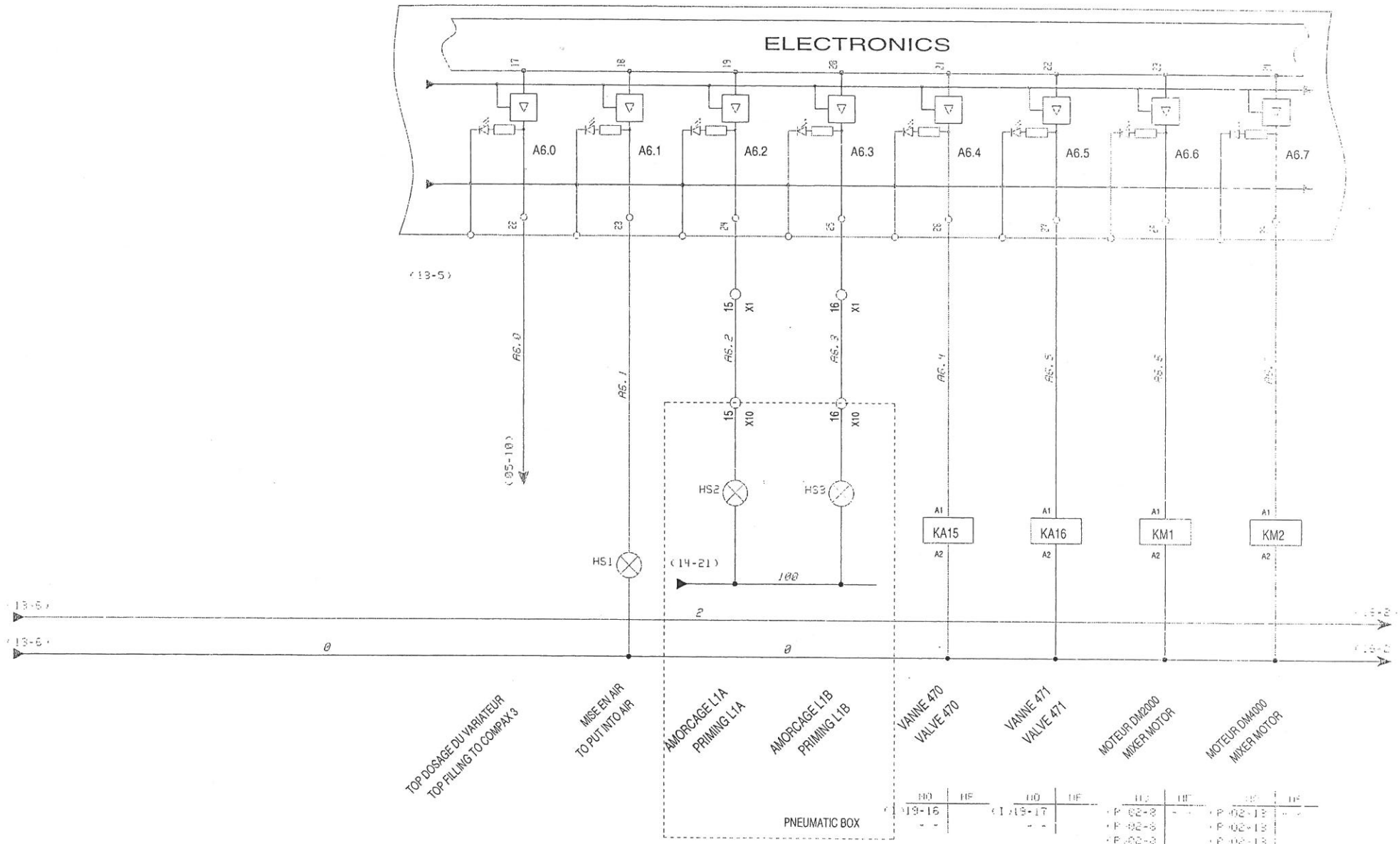

DOSYS Des pompes au process	DESSINE PAR PCM DOSYS	DATE DE CREATION 23/07/2003	TETRA PACK outputs A6.0 to A6.7	IND	DATE	MODIFICATION	VISA	SAS WORLDWIDE IGE+XAO	FOLIO: 15
	VERIFIE PAR PCM DOSYS	DATE DE VERIFICATION 22-12-2003							CD057-00

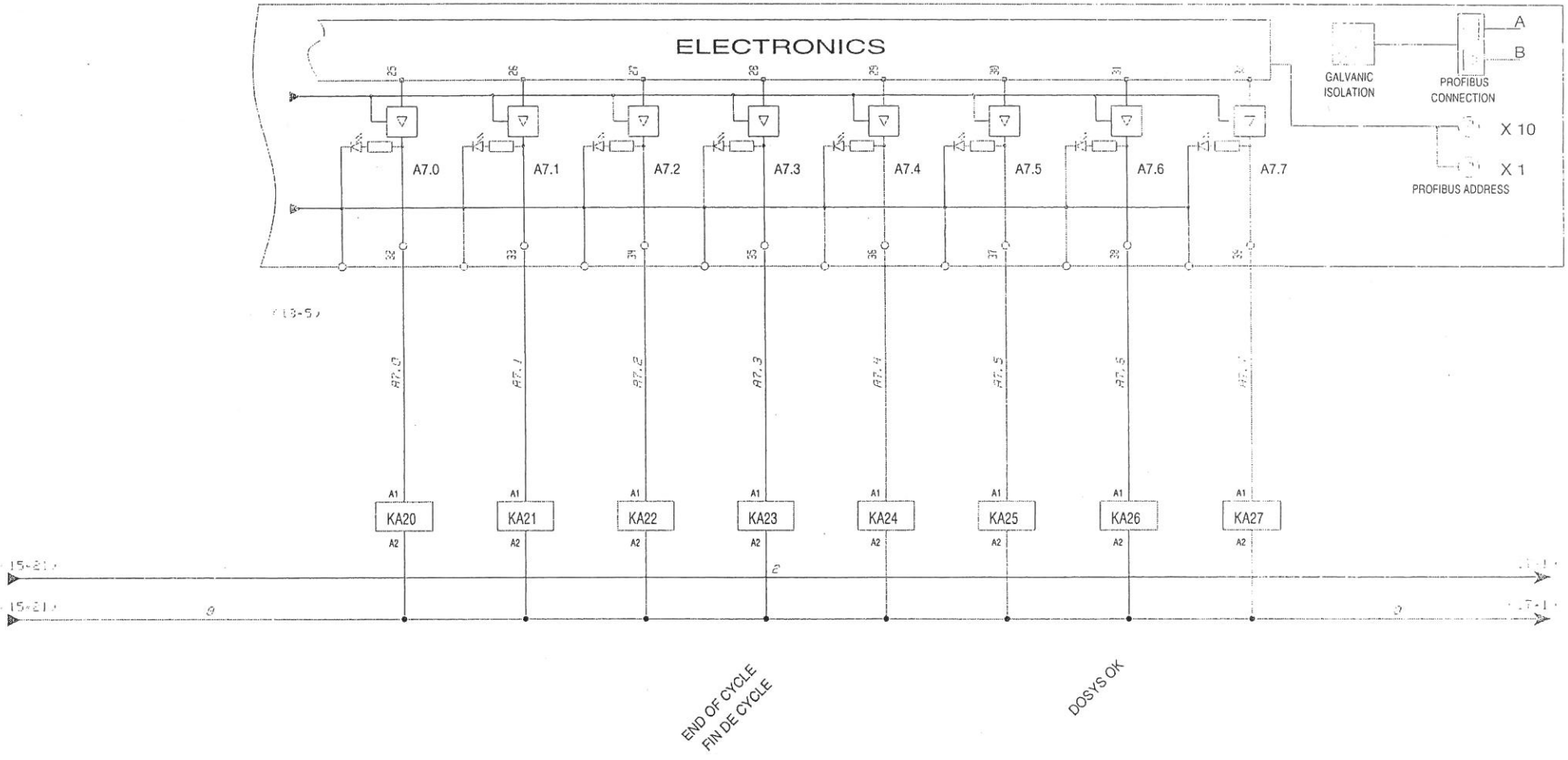

NO	NF	NO	NF	NO	NF	NO	NF	NO	NF	NO	NF	NO	NF	NO	NF
(I)19-4		(I)19-5		(I)19-7		(I)19-8		(I)19-10		(I)19-11		(I)19-13		(I)19-14	

DOSYS Des cordes au Groupes	DESSINE PAR PCM DOSYS	DATE DE CREATION 23/07/2003	TETRA PACK outputs A7.0 to A7.7	IND	DATE	MODIFICATION	VISA	SGE WORLDWIDE IGE+XAO	FOLIO: 16
	VERIFIE PAR PCM DOSYS	DATE DE VERIFICATION 22-12-2003						CD057-00	

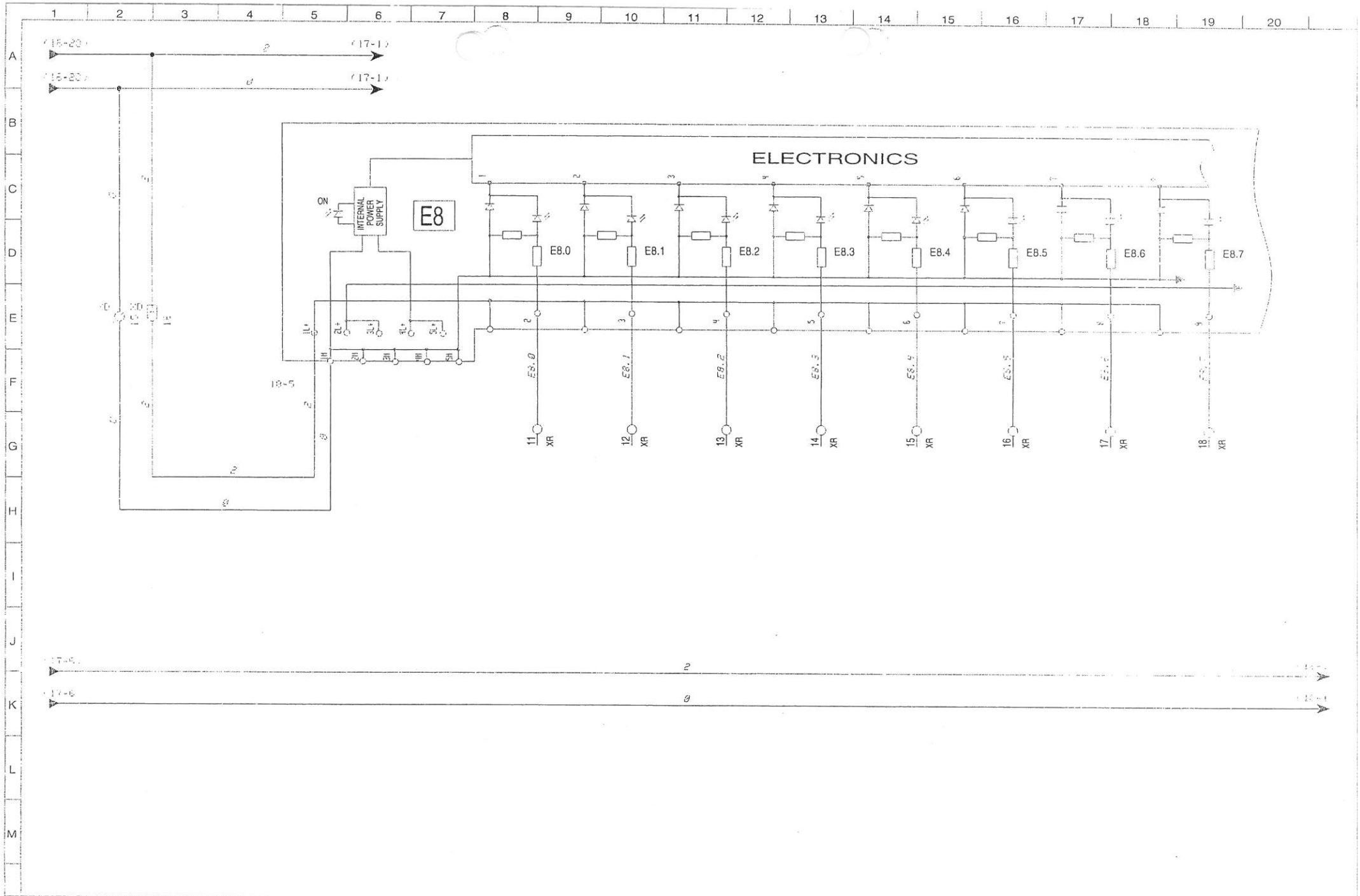

DOSYS Des ponts au produits	DESSINE PAR PCM DOSYS	DATE DE CREATION 23/07/2003	TETRA PACK inputs E8.0 to E8.7	IND	DATE	MODIFICATION	VISA	WORLDWIDE IGE+XAO	FOLIO: 17
	VERIFIE PAR PCM DOSYS	DATE DE VERIFICATION 22-12-2003							CD057-00

ARMOIRE DOSYS

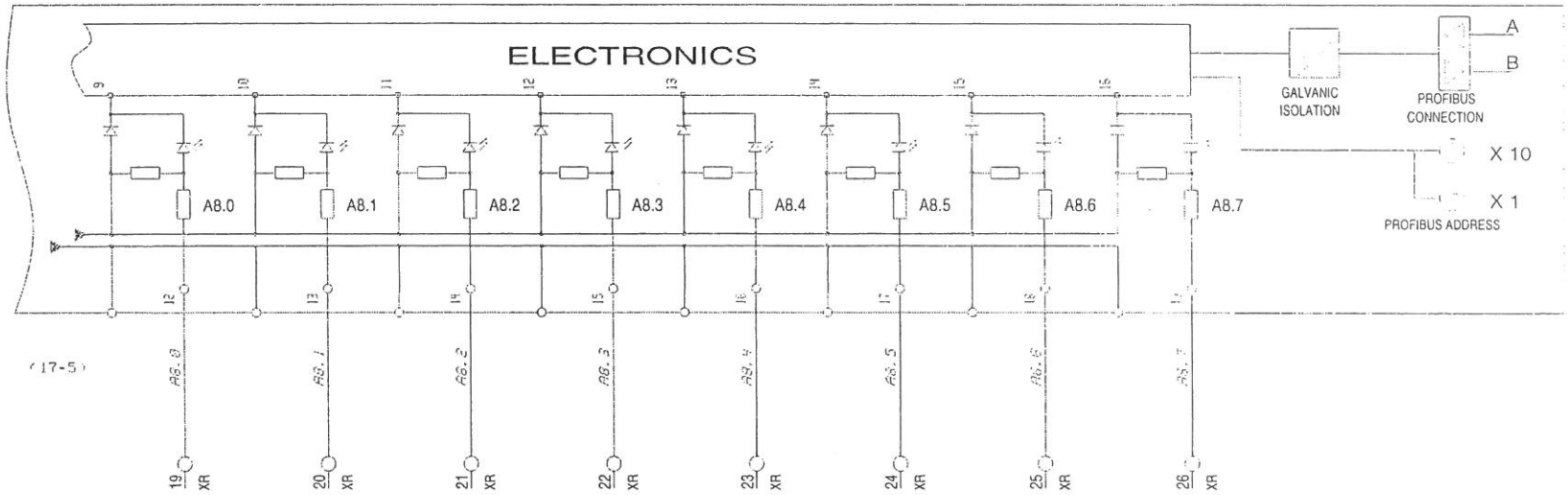

(17-21) 2

(17-21) 0

DOSYS Des pompes au process	DESSINE PAR PCM DOSYS	DATE DE CREATION 23/07/2003	TETRA PACK outputs A8.0 to A8.7	IND	DATE	MODIFICATION	VISA	N.E.E. WORLDWIDE IGE+XAO	FOLIO: 18
	VERIFIE PAR PCM DOSYS	DATE DE VERIFICATION 22-12-2003							CD057-00

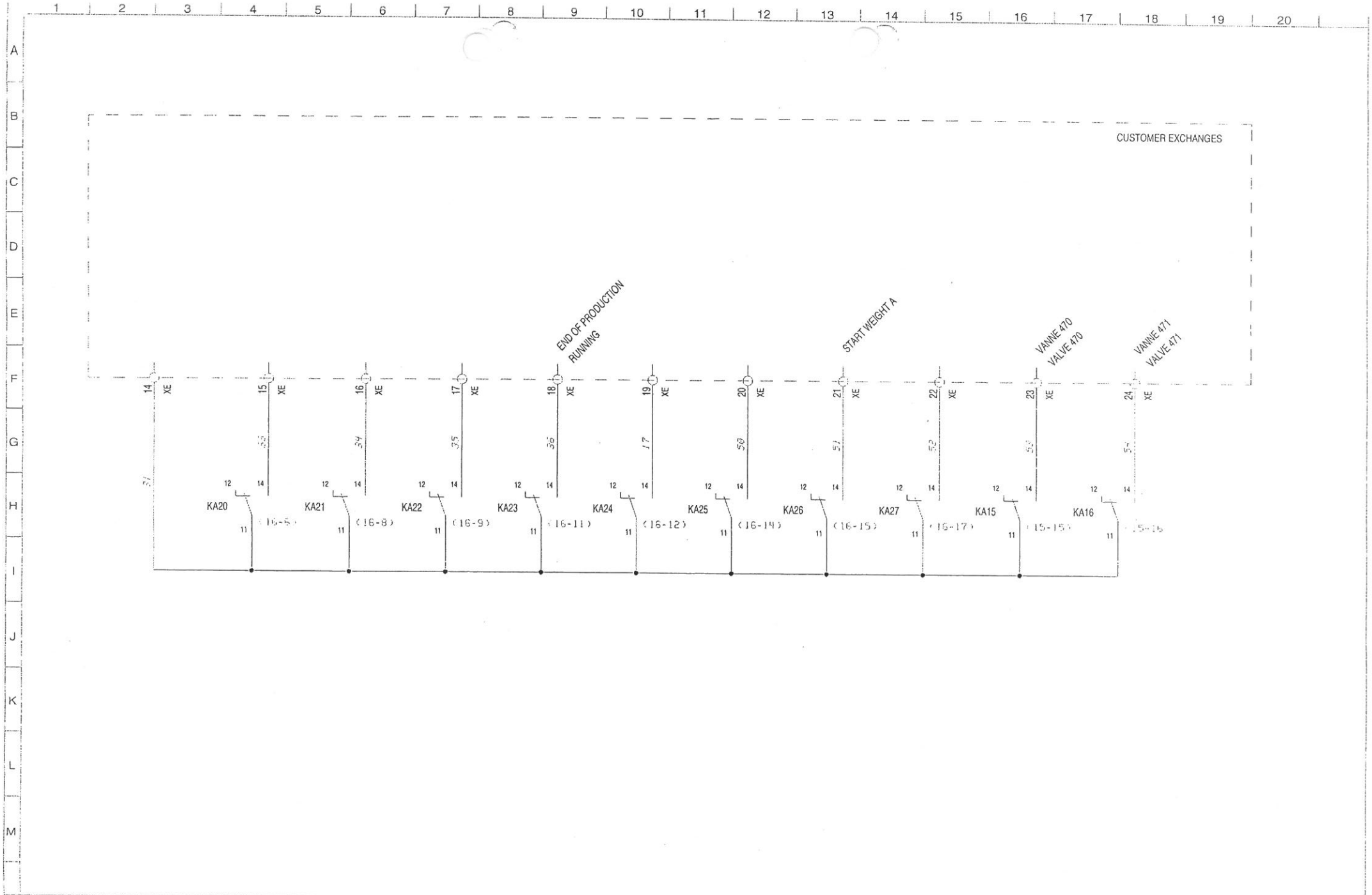

DOSYS Des pompes au process	DESSINE PAR PCM DOSYS	DATE DE CREATION 23/07/2003	TETRA PACK CUSTOMER EXCHANGES	IND	DATE	MODIFICATION	VISA	FOLIO: 19
	VERIFIE PAR PCM DOSYS	DATE DE VERIFICATION 22-12-2003						CD057-00

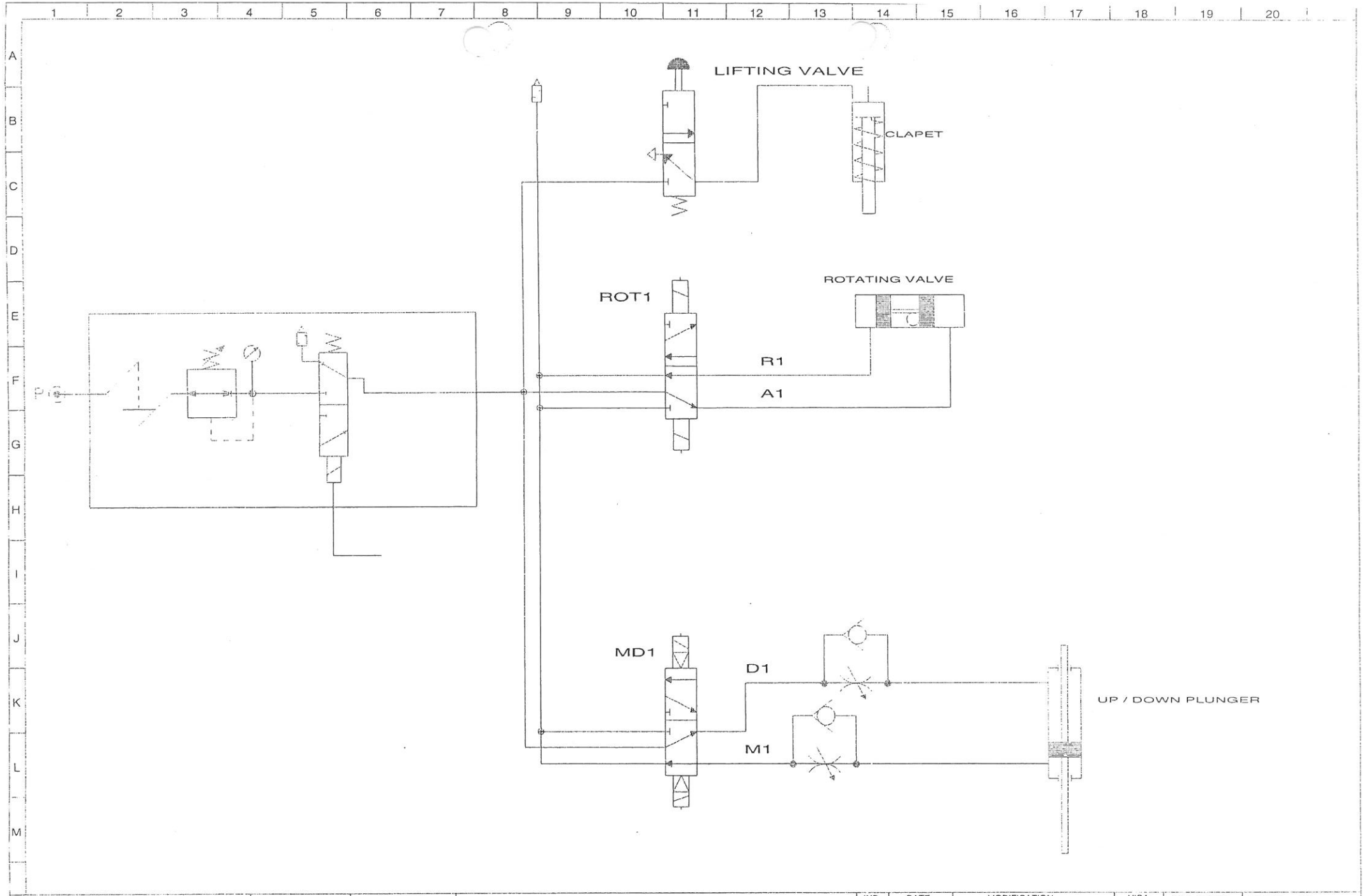

DOSYS Des cordes au succès	DESSINE PAR PCM DOSYS	DATE DE CREATION 23/07/2003	TETRA PACK NEUMATIC	IND	DATE	MODIFICATION	VISA	AEE WORLDWIDE IGE+XAO	FOLIO: 20
	VERIFIE PAR PCM DOSYS	DATE DE VERIFICATION 22-12-2003							CD057-00

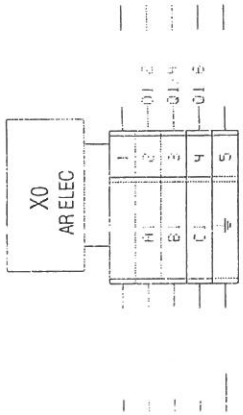

DOSYS Des pompes au process	DESSINE PAR PCM DOSYS	DATE DE CREATION 23/07/2003	TETRA PACK TERMINAL : X0	IND	DATE	MODIFICATION	VISA	SEB WORLDWIDE IGE+XAO	FOLIO: 21
	VERIFIE PAR PCM DOSYS	DATE DE VERIFICATION 22-12-2003		A	01-03-2001	LIGNE DE SECURITE			CD057-00

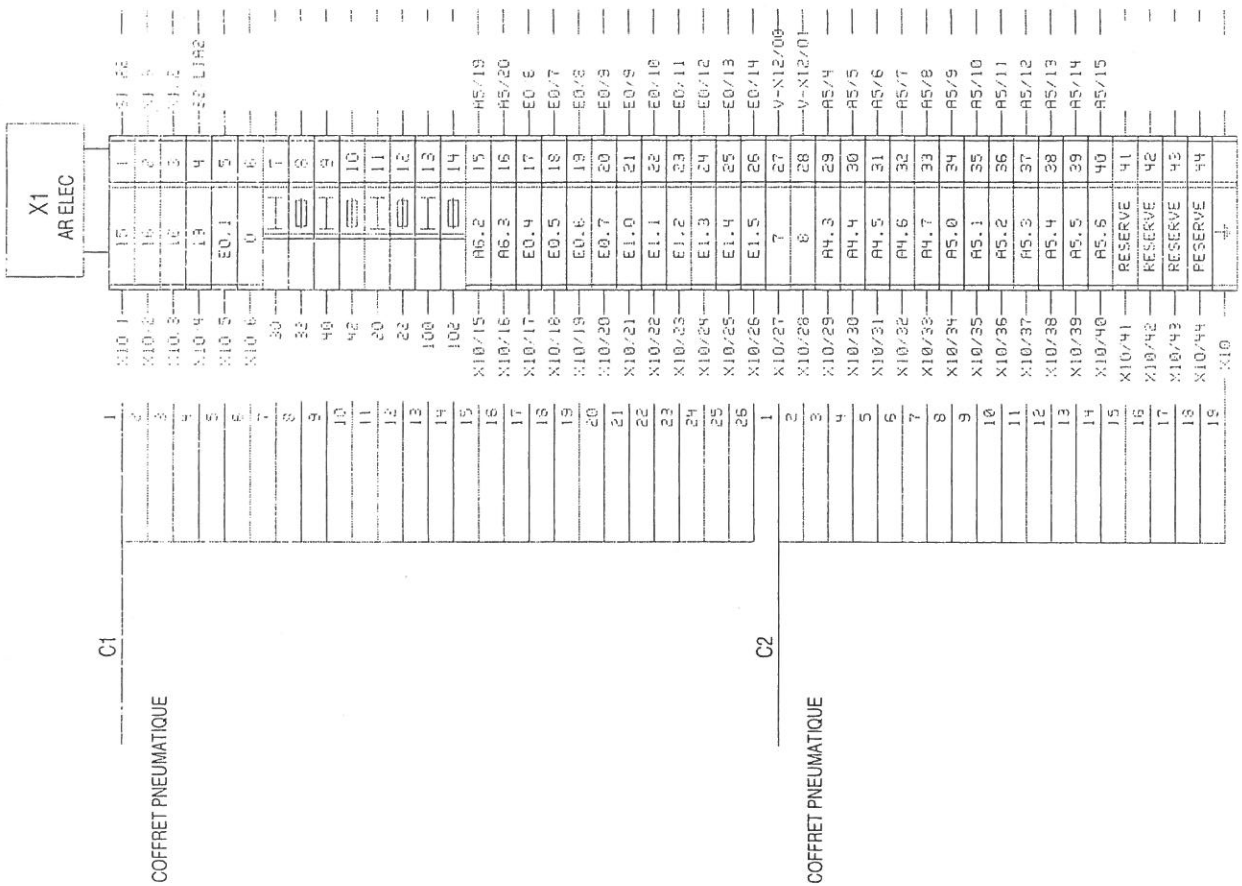

DOSYS Des données au process	DESSINE PAR PCM DOSYS	DATE DE CREATION 23/07/2003	TETRA PACK TERMINAL : X1	IND	DATE	MODIFICATION	VISA	SEC WORLDWIDE IGE+XAO
	VERIFIE PAR PCM DOSYS	DATE DE VERIFICATION 22-12-2003		A	01-03-2001	LIGNE DE SECURITE		FOLIO: 22
								CD057-00

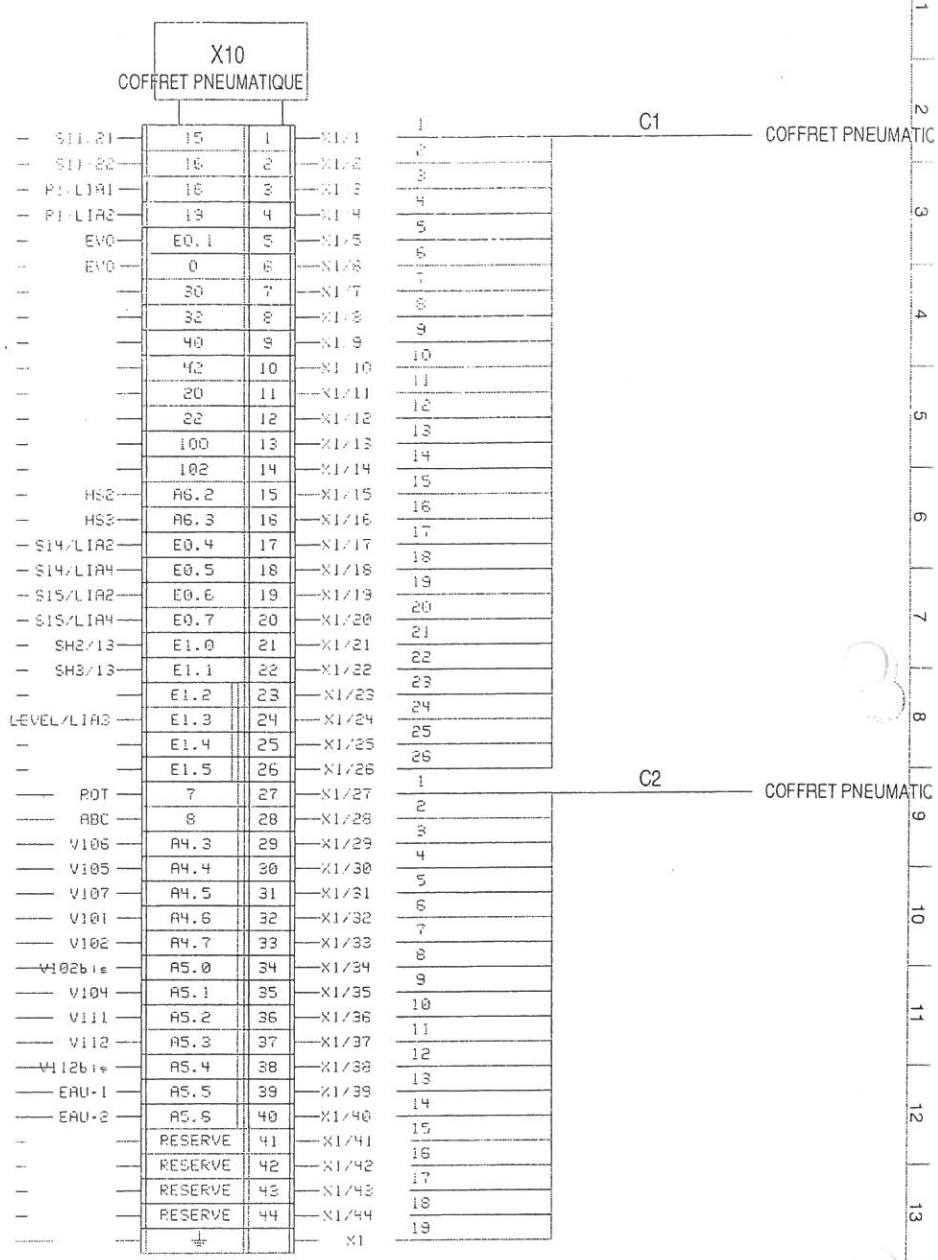

DOSYS

DESSINE PAR: PCM DOSYS
VERIFIE PAR: PCM DOSYS
DATE DE CREATION: 23/07/2003
DATE DE VERIFICATION: 22-12-2003

TETRA PACK
TERMINAL : X10

IND	DATE	MODIFICATION	VISA
A	01-03-2001	LIGNE DE SECURITE	

CD057-00

WORLDWIDE ISE-XAO

FOLIO: 23

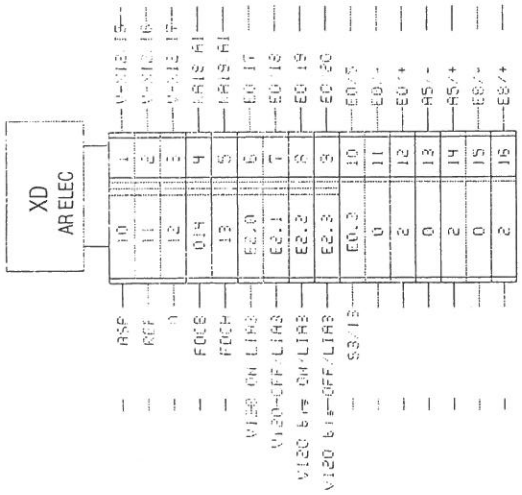

DOSYS Des données au process	DESSINE PAR PCM DOSYS	DATE DE CREATION 23/07/2003	TETRA PACK TERMINAL : XD	IND	DATE	MODIFICATION	VISA	SEB WORLDWIDE IGE-XAO
	VERIFIE PAR PCM DOSYS	DATE DE VERIFICATION 22-12-2003		A	01-03-2001	LIGNE DE SECURITE		FOLIO: 24
								CD057-00

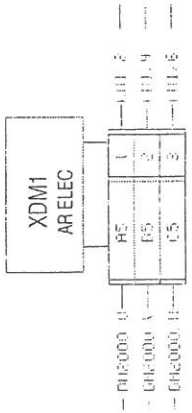

DOSYS Des données au monde	DESSINE PAR PCM DOSYS	DATE DE CREATION 23/07/2003	TETRA PACK	IND	DATE	MODIFICATION	VISA	SEE WORLDWIDE IGE+XAO	FOLIO: 25
	VERIFIE PAR PCM DOSYS	DATE DE VERIFICATION 22-12-2003	TERMINAL : XDM1	A	01-03-2001	LIGNE DE SECURITE			CD057-00

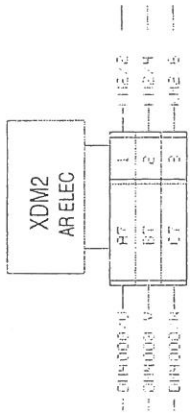

DOSYS Des pompes au process	DESSINE PAR PCM DOSYS	DATE DE CREATION 23/07/2003	TETRA PACK	IND	DATE	MODIFICATION	VISA	SEW WORLDWIDE IGE+XAO	FOLIO: 26
	VERIFIE PAR PCM DOSYS	DATE DE VERIFICATION 22-12-2003	TERMINAL : XDM2	A	01-03-2001	LIGNE DE SECURITE			CD057-00

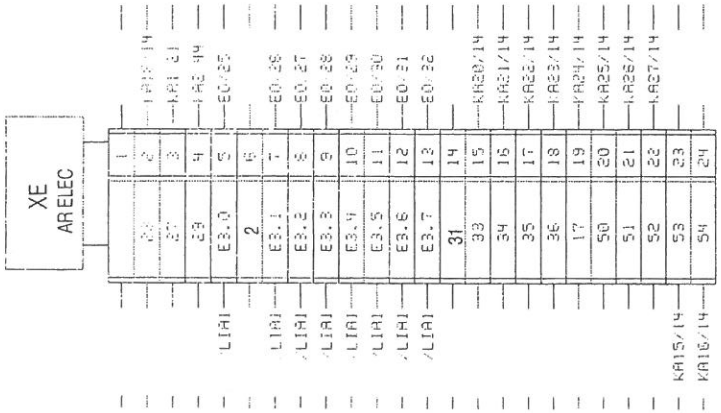

DOSYS Des pompes au process	DESSINE PAR PCM DOSYS	DATE DE CREATION 23/07/2003	TETRA PACK TERMINAL : XE	IND	DATE	MODIFICATION	VISA	SEB WORLDWIDE IGE+XAO	FOLIO: 27
	VERIFIE PAR PCM DOSYS	DATE DE VERIFICATION 22-12-2003		A	01-03-2001	LIGNE DE SECURITE			CD057-00

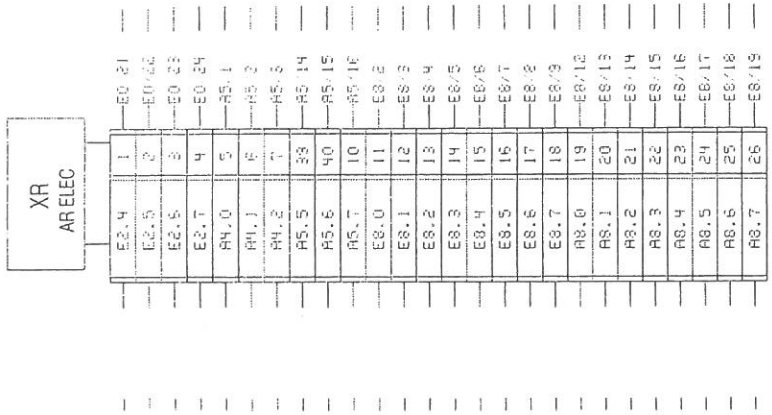

DOSYS Des pompes au process	DESSINE PAR PCM DOSYS	DATE DE CREATION 23/07/2003	TETRA PACK TERMINAL : XR	IND	DATE	MODIFICATION	VISA	DOSYS WORLDWIDE IGE+XAO	FOLIO: 28
	VERIFIE PAR PCM DOSYS	DATE DE VERIFICATION 22-12-2003		A	01-03-2001	LIGNE DE SECURITE			CD057-00

FOLIO	REPERE	DESIGNATION	FABRIQUANT	REFERENCE	CODE GPIC
02	Q1	MAIN POWER SUPPLY SWITCH 32A	SCHNEIDER	VCD-1	
02		POLE NEUTRE ADDITIONNEL	SCHNEIDER	VZ-11	ZC4020.000
02	Q2	CIRCUIT BREAKER C60N 4P 25A	MERLIN GERIN	24230	ZP5041.000
02	Q4	ENGINE CIRCUIT BREAKER P25M 1.6 to 2.5 A	MERLIN GERIN	21106	ZP5108.000
02		AUXILIAR CIRCUIT BREAKER CONTACT 1NO + 1NC FOR P25M	MERLIN GERIN	21120	ZP5107.000
02	Q5	ENGINE CIRCUIT BREAKER P25M 4 to 6.3 A	MERLIN GERIN	21108	ZP5106.000
02		AUXILIAR CIRCUIT BREAKER CONTACT 1NO + 1NC FOR P25M	MERLIN GERIN	21120	ZP5107.000
03	PC	SOCKET	LEGRAND	04280	ZC3000.000
03	Q3	DIFFERENCIAL CIRCUIT BREAKER 1A/30mA	MERLIN GERIN	19307	ZP5047.000
03	F3	FUSE CIRCUIT BREAKER STI 1P+N	MERLIN GERIN	15646	ZP1000.000
03		FUSE 10.3*38 1A am	LEGRAND	13001	ZP0021.000
03	M1	FAN	RITTAL	SK3322.100	ZV0010.000
03		FILTRE	RITTAL	SK3322.200	ZV0011.000
03	PLC	PLC CPU-315-2 DP	SIEMENS	6ES7 315-2AG10-0AB0	ZA2295.000
03	CPU 315 - DP	POWER SUPPLY PS 307 120/230V 2A	SIEMENS	6ES7 307-1BA00-0AA0	ZA2219.000
03		BATTERY	SIEMENS	6ES7 971-1AA00-OAAO	ZA2220.000
03		FLASH EEPROM MEMORY 64 Ko	SIEMENS	6ES7 953-8LF00-0AA0	ZA2290.000
03		PLC ACCESSORIE	SIEMENS	6ES7 390 1AE80 OAAO	ZA2251.000
03		ETHERNET INTERFACE CP 343-1	SIEMENS	6GK7 343-1EX11-0XE0	ZA2261.000
03	F4	FUSE CIRCUIT BREAKER STI 1P+N	MERLIN GERIN	15646	ZP1000.000
03		FUSE 10.3*38 2A Gg	LEGRAND	13302	ZP0012.000
03	F5	FUSE CIRCUIT BREAKER STI 1P+N	MERLIN GERIN	15646	ZP1000.000
03		FUSE 10.3*38 2A Gg	LEGRAND	13302	ZP0012.000
03	T1	24V DC POWER SUPPLY 5A	EUROGI	EAGMLE0524-E000302	ZA5035.000
03	F2	FUSE CIRCUIT BREAKER STI 2P	MERLIN GERIN	15651	ZP1002.000
03	TP170	OPERATOR DISPLAY TP170B	SIEMENS	6AV6 545-0BC15-2AX0	ZA2224.000
03		PROFIBUS CONNECTOR	SIEMENS	6ES7 972-0BB40-0XA0	ZA2230.000
03	H1	HEAD OF WIHTE LIGHT	SCHNEIDER	ZB4-BV01	ZC0600.000
03		BODY OF INDICATOR WITHOUT LAMP	SCHNEIDER	ZB4-BV6	ZC0610.000
03	F6	FUSE CIRCUIT BREAKER STI 1P+N	MERLIN GERIN	15646	ZP1000.000
03		FUSE 10.3*38 4A Gg	LEGRAND	13304	ZP0013.000
04	Q6	CIRCUIT BREAKER C60N 2P type D 10A	MERLIN GERIN	24586	ZP5046.000
07	KA18	2 CONTACTS AUXILIARY RELAY	FINDER	40529024	ZR0211.000

DOSYS Des données un process

DESSINE PAR	DATE DE CREATION	TETRA PACK	IND	DATE	MODIFICATION	VISA	WORLDWIDE IGE+XAO	FOLIO: 29
PCM DOSYS	23/07/2003	Nomenclature (Rep./Folio/Design.Ang/Ref./Fab./Gpic)						
VERIFIE PAR	DATE DE VERIFICATION							CD057-00
PCM DOSYS	22-12-2003							

FOLIO	REPERE	DESIGNATION	FABRIQUANT	REFERENCE	CODE GPIC
07		AUXILIARY RELAY INTERFACE	FINDER	95.75	ZR0210.000
07	KA19	2 CONTACTS AUXILIARY RELAY	FINDER	40529024	ZR0211.000
07		AUXILIARY RELAY INTERFACE	FINDER	95.75	ZR0210.000
07	S1	PUSCH-PULL EMERGENCY STOP BUTTON	SCHNEIDER	XB4-BT42	ZC0550.000
07		TAG "EMERGENCY STOP"	SCHNEIDER	ZB2-BY8330	ZC0548.000
07	S11	PUSCH-PULL EMERGENCY STOP BUTTON	SCHNEIDER	XB4-BT42	ZC0550.000
07		TAG "EMERGENCY STOP"	SCHNEIDER	ZB2-BY8330	ZC0548.000
07	KAS1	SECURITY RELAY	SCHNEIDER	XPSAL5110	ZR0075.000
07	SH1	BLUE LIGHT PUSH BUTTON	SCHNEIDER	ZB4-BW36	ZC0712.000
07		COMPLETE BODY PUSH BUTTON	SCHNEIDER	ZB4-BW061	ZC0712.000
07	KA1	4 CONTACTS AUXILIARY RELAY	SCHNEIDER	RXN-41G12BD	ZR0002.000
07	KA2	4 CONTACTS AUXILIARY RELAY	SCHNEIDER	RXN-41G12BD	ZR0002.000
09	E0	32 INPUTS 24Vdc INTERFACE	SIEMENS	6ES7 321-1BL00-OAAO	ZA2264.000
09		FRONTAL CONNECTOR FOR 40 POINTS I/O CARD	SIEMENS	6ES7 922-3BF00-0AC0	ZA2266.000
09	S3	BLUE PUSH BUTTON	SCHNEIDER	XB4BA61	ZC0706.000
09			SCHNEIDER	ZBE 101	ZC0515.000
09	S14	3 POSITIONS SWITCH	SCHNEIDER	XB4-BD33	ZC0519.000
09	S15	3 POSITIONS SWITCH	SCHNEIDER	XB4-BD33	ZC0519.000
10	SH2	GREEN HEAD PUSH BUTTON	SCHNEIDER	ZB4-BW33	ZC0501.000
10		COMPLETE BODY PUSH BUTTON	SCHNEIDER	ZB4-BW061	ZC0712.000
10	SH3	GREEN HEAD PUSH BUTTON	SCHNEIDER	ZB4-BW33	ZC0501.000
10		COMPLETE BODY PUSH BUTTON	SCHNEIDER	ZB4-BW061	ZC0712.000
13	A5	32 INPUTS 24Vdc INTERFACE	SIEMENS	6ES7 321-1BL00-OAAO	ZA2264.000
13		FRONTAL CONNECTOR FOR 40 POINTS I/O CARD	SIEMENS	6ES7 922-3BF00-0AC0	ZA2266.000
15	KA15	2 CONTACTS AUXILIARY RELAY	FINDER	40529024	ZR0211.000
15		AUXILIARY RELAY INTERFACE	FINDER	95.75	ZR0210.000
15	KA16	2 CONTACTS AUXILIARY RELAY	FINDER	40529024	ZR0211.000
15		AUXILIARY RELAY INTERFACE	FINDER	95.75	ZR0210.000
15	KM1	ENGINE CONTACTOR 9 A 24Vdc	SCHNEIDER	LC1D09BD	ZP6006.000
15	KM2	ENGINE CONTACTOR 9 A 24Vdc	SCHNEIDER	LC1D09BD	ZP6006.000
16	KA20	2 CONTACTS AUXILIARY RELAY	FINDER	40529024	ZR0211.000
16		AUXILIARY RELAY INTERFACE	FINDER	95.75	ZR0210.000
16	KA21	2 CONTACTS AUXILIARY RELAY	FINDER	40529024	ZR0211.000

FOLIO	REPERE	DESIGNATION	FABRIQUANT	REFERENCE	CODE GPIC
16		AUXILIARY RELAY INTERFACE	FINDER	95.75	ZR0210.000
16	KA22	2 CONTACTS AUXILIARY RELAY	FINDER	40529024	ZR0211.000
16		AUXILIARY RELAY INTERFACE	FINDER	95.75	ZR0210.000
16	KA23	2 CONTACTS AUXILIARY RELAY	FINDER	40529024	ZR0211.000
16		AUXILIARY RELAY INTERFACE	FINDER	95.75	ZR0210.000
16	KA24	2 CONTACTS AUXILIARY RELAY	FINDER	40529024	ZR0211.000
16		AUXILIARY RELAY INTERFACE	FINDER	95.75	ZR0210.000
16	KA25	2 CONTACTS AUXILIARY RELAY	FINDER	40529024	ZR0211.000
16		AUXILIARY RELAY INTERFACE	FINDER	95.75	ZR0210.000
16	KA26	2 CONTACTS AUXILIARY RELAY	FINDER	40529024	ZR0211.000
16		AUXILIARY RELAY INTERFACE	FINDER	95.75	ZR0210.000
16	KA27	2 CONTACTS AUXILIARY RELAY	FINDER	40529024	ZR0211.000
16		AUXILIARY RELAY INTERFACE	FINDER	95.75	ZR0210.000
17	E8	16 INPUTS 24Vdc INTERFACE	SIEMENS	6ES7 321-1BH01-0AA0	ZA2275.000
17		FRONTAL CONNECTOR FOR 20 POINTS I/O CARD	SIEMENS	6ES7 922-3BF00-0AB0	ZA2267.000

DOSYS Des données au processus

DESSINE PAR	DATE DE CREATION
PCM DOSYS	23/07/2003
VERIFIE PAR	DATE DE VERIFICATION
PCM DOSYS	22-12-2003

TETRA PACK

Nomenclature (Rep./Folio/Design.Ang/Ref./Fab./Gpic)

IND	DATE	MODIFICATION	VISA

SEE WORLDWIDE IGE+XAO

FOLIO: 31

CD057-00

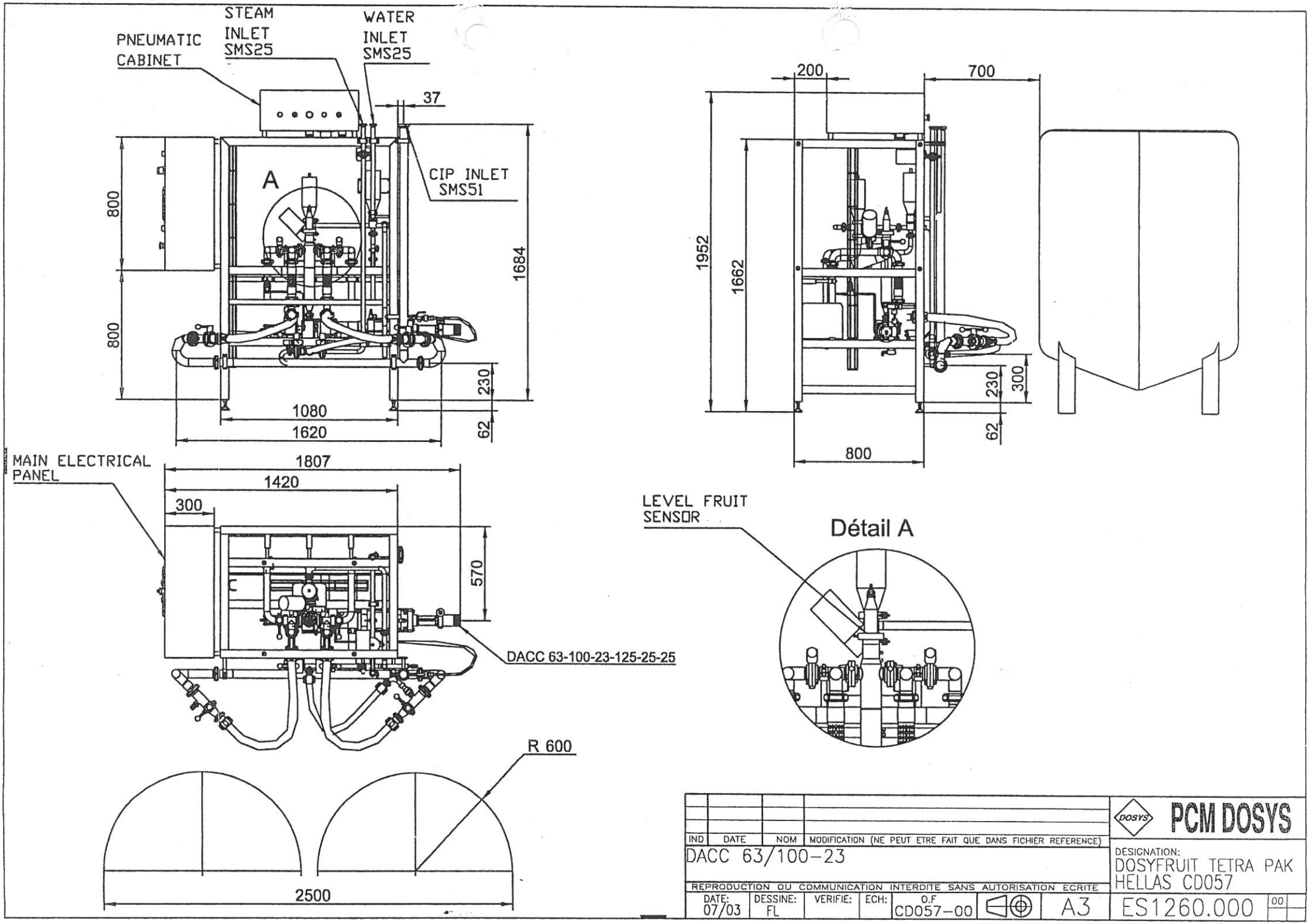
STEAM INLET SMS25
WATER INLET SMS25
PNEUMATIC CABINET
37
CIP INLET SMS51
A
800
800
1684
230
62
1080
1620
200
700
1952
1662
230
300
62
800
MAIN ELECTRICAL PANEL
1807
1420
300
570
DACC 63-100-23-125-25-25
LEVEL FRUIT SENSOR
Détail A
R 600
2500
IND
DATE
NOM
MODIFICATION (NE PEUT ETRE FAIT QUE DANS FICHIER REFERENCE)
DACC 63/100-23
REPRODUCTION OU COMMUNICATION INTERDITE SANS AUTORISATION ECRITE
DATE: 07/03
DESSINE: FL
VERIFIE:
ECH:
O.F CD057-00
A3
PCM DOSYS
DESIGNATION:
DOSYFRUIT TETRA PAK HELLAS CD057
ES1260.000
00

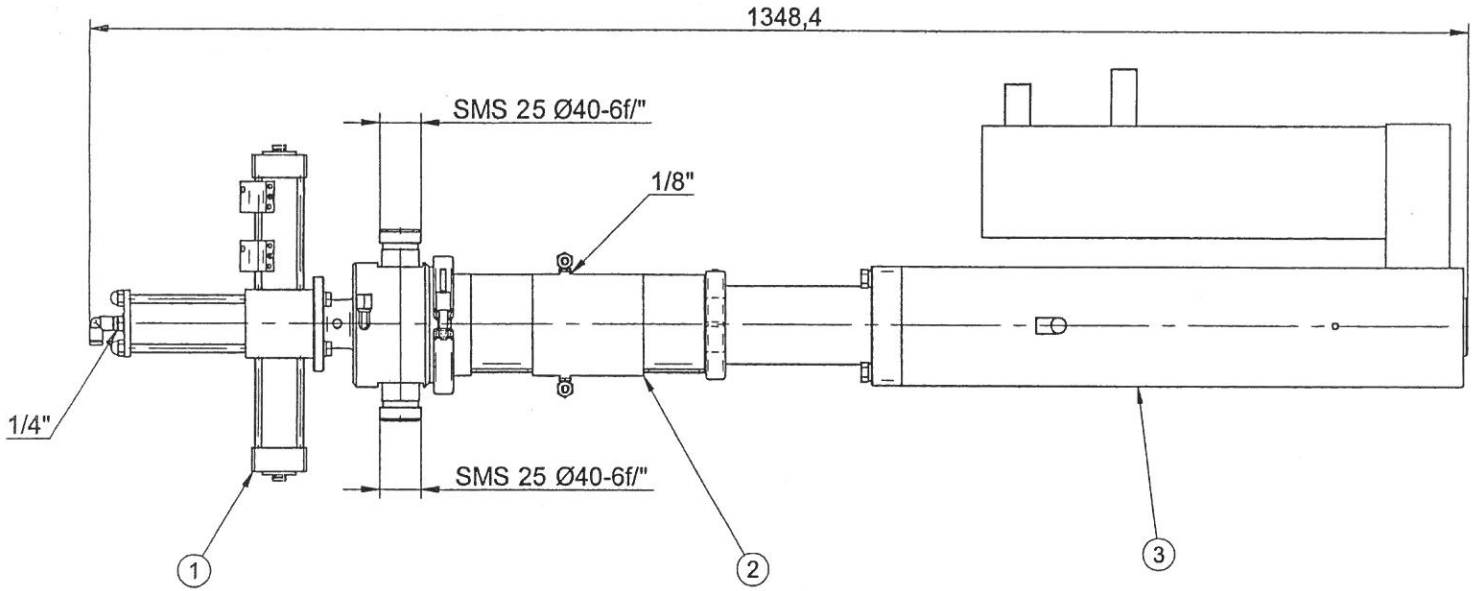

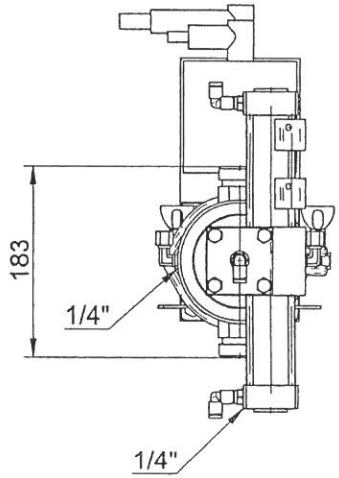

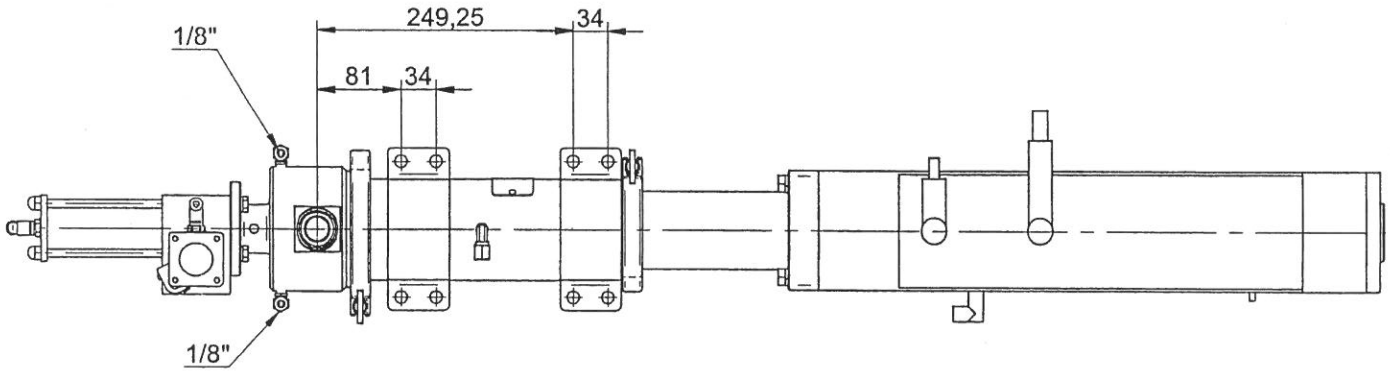

Rep.	Code article	Description	Désignation	Qté
1	SE0320.000	Steril head Φ23	Tête Φ23-A25-R25	1
2	SE1915.000	Body Φ63-100-23 (125)	Corps Φ63-100-23 (125)	1
3	SE3800.SME	Adjustement SME PARKER C100	Réglage SME PARKER C100	1

POCHETTE DE RECHANGE =

POIDS (kg) =
WEIGHT (kg)

IND	N° MODIF.	DATE	NOM	DESIGNATION MODIFICATION

DATE:	DESSINE:	VERIFIE:	ÉCH:	O.F.		
08/2003	L.C		0.2			A3

PCM DOSYS

DESIGNATION :
DACC 63/100-23+SME
PARKER A25 R25

ED1055.SME

Ind:00
folio:

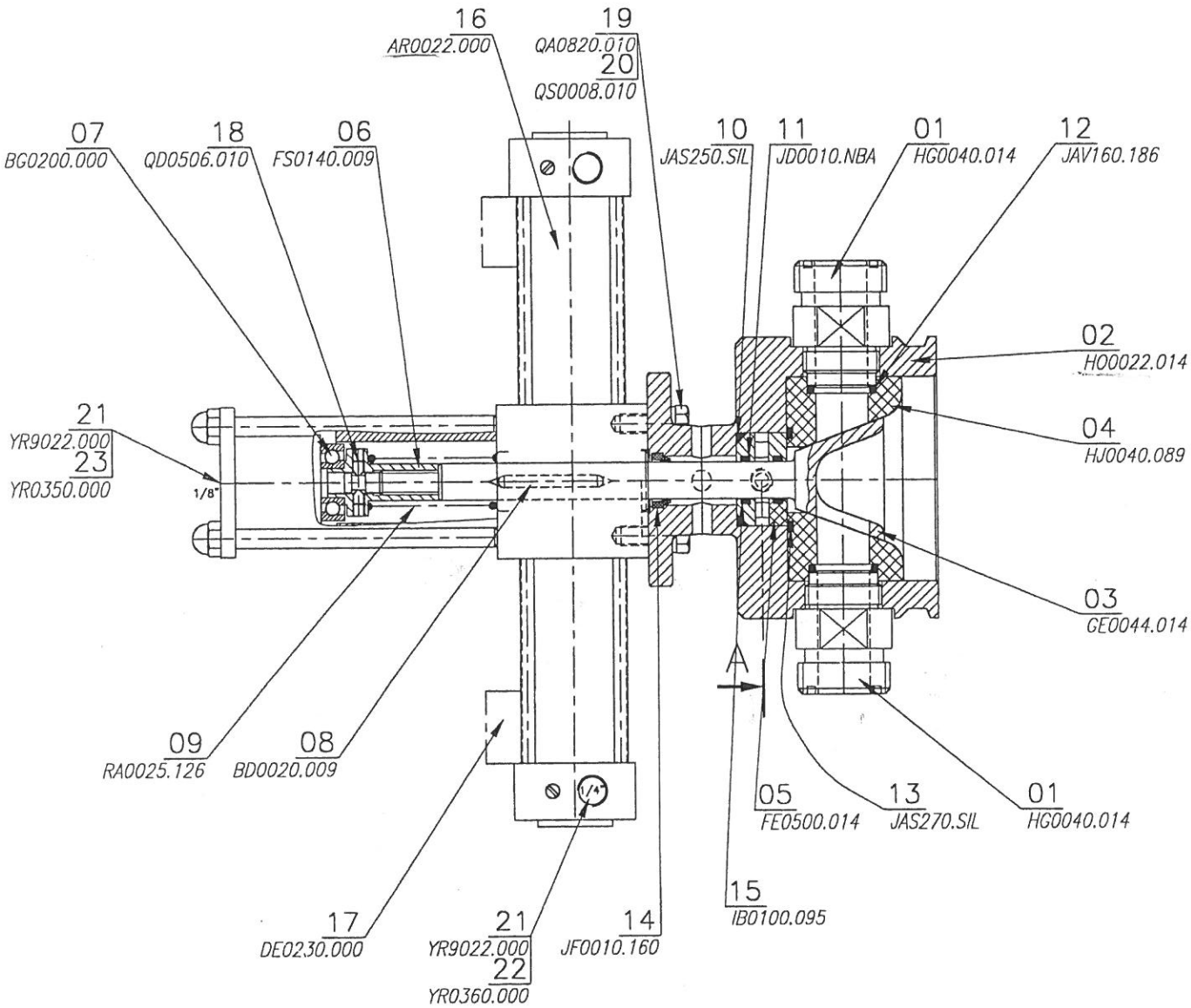

SECTION A

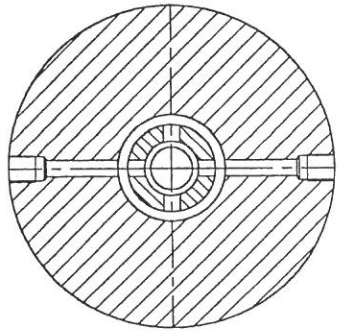

POIDS (kg) =
WEIGHT (kg)

SPECIFICATIONS DE MONTAGE

1) MONTER LES JOINTS A LA GRAISSE ALIMENTAIRE BLANCHE
2) RESPECTER LE SENS DE MONTAGE DES JOINTS

ASSEMBLY SPECIFICATIONS

1) ASSEMBLE THE SEALS WITH WHITE FOOD-QUALITY GREASE
2) ENSURE THE SEALS ARE ASSEMBLED THE RIGHT WAY ROUND

IND	DATE	NOM	MODIFICATION (NE PEUT ETRE FAIT QUE DANS FICHIER REFERENCE)
01	21.06.1999	L.D	MISE A JOUR

SMS25/SMS25

DATE:	DESSINE:	VERIFIE:	ECH:	O.F		
05.1999	D.C		0.5			A3

PCM DOSYS

DESIGNATION:
TETE D23 STERILE

SE0320.000 00 01

Job Ref. : CD057-00 Dt 23/12/03 Page 1

Client : TETRA PAK

Parts list number SE0320.000 TETE D23 A25-R25

Item	Part numb.	Description	Qty	Par
01	HG0040.014	RACCORD SMS D23	2	
02	HO0022.014	HEAD	1	
03	GE0044.014	VALVE, RELIEF VALVE	1	
04	HJ0040.089	SEAT	1	
05	FE0500.014	SEAL FACE	1	
06	FS0140.009	STOP	1	
07	BG0200.000	BEARING	1	
08	BD0020.009	KEY	1	
09	RA0025.126	SPRING	1	
10	JAS250.SIL	GASKET, SEAL	1	
11	JD0010.NBA	GASKET, SEAL	2	
12	JAV160.186	GASKET, SEAL	2	
13	JAS270.SIL	GASKET, SEAL	1	
14	JF0010.160	GASKET, SEAL	1	
15	IB0100.095	ANTI EXTRUSION RING	2	
16	AR0022.000	VERIN TETE D23/6146	1	
17	DE0230.000	DETECTEUR MK5044 EN 5m	2	
18	QD0506.010	SCREW	2	
19	QA0820.010	SCREW	4	
20	QS0008.010	WASHER	4	
21	YR9022.000	FITTING, CONNECTION	3	
22	YR0360.000	ACCESSORIES	2	
23	YR0350.000	ACCESSORIES	1	

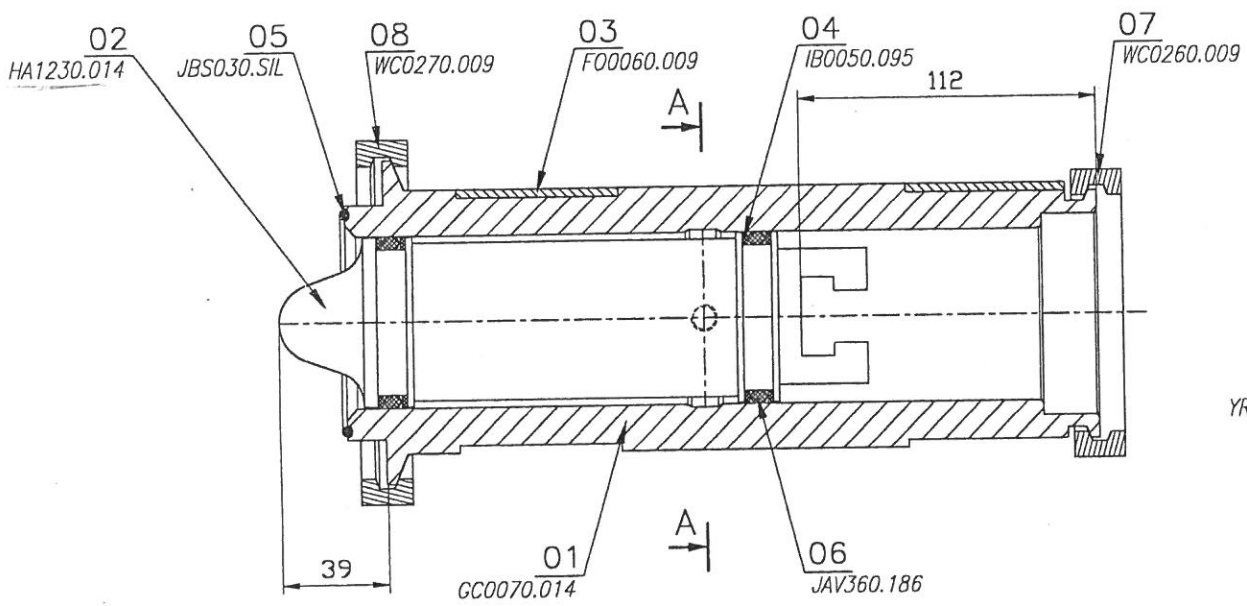

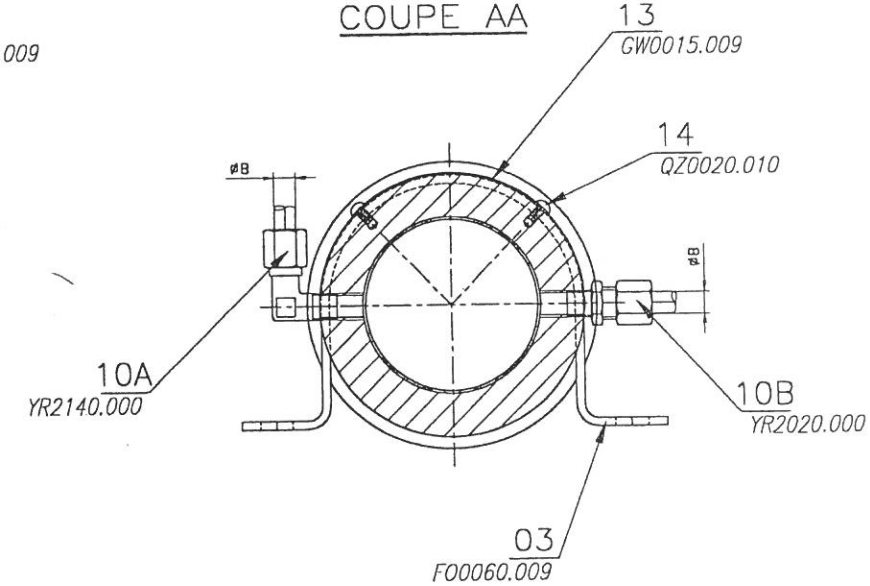

POIDS (kg) =
WEIGHT (kg)

SPECIFICATIONS DE MONTAGE

1) MONTER LES JOINTS A LA GRAISSE ALIMENTAIRE BLANCHE
2) MONTER LES RACCORDS AU RUBAN TEFLON OU A LA PATE TEFLON
3) REP. 4 A COUPER AVANT MONTAGE SUIVANT SCHEMA CI-DESSOUS

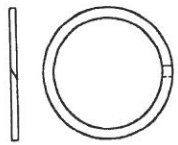

ASSEMBLY SPECIFICATIONS

1) *ASSEMBLE THE SEALS WITH WHITE FOOD-QUALITY GREASE*
2) *ASSEMBLE THE COUPLINGS WIHT TEFLON TAPE OR TEFLON PASTE*
3) *ITEM 4 TO BE CUT BEFORE ASSEMBLY IN ACCORDANCE WITH THE FOLLOWING DIAGRAM*

IND	DATE	NOM	MODIFICATION (NE PEUT ETRE FAIT QUE DANS FICHIER REFERENCE)
02	07/03	FL	GC1625.014 devient GC0070.014
01	16/06/99	L.D	MISE A JOUR

DATE:	DESSINE:	VERIFIE:	ECH:	O.F		A3
04.1999	D.C		0.5			

PCM DOSYS

DESIGNATION:
CORPS D63 C100
VL 125

SE1915.000 ~~00~~ ~~01~~ 02

Job Ref. : CD057-00 Dt 23/12/03 Page 1

Client : TETRA PAK

Parts list number SE1915.000 CORPS D63 C100 VL125

Item	Part numb.	Description	Qty	Par
01	GC0070.014	CYLINDER, JACKET	1	
02	HA1230.014	PISTON	1	
03	FO0060.009	FLANGE	2	
04	IB0050.095	ANTI EXTRUSION RING	4	
05	JBS030.SIL	GASKET, SEAL	1	
06	JAV360.186	GASKET, SEAL	2	
07	WC0260.009	MASSIVE CLAMP	1	
08	WC0270.009	MASSIVE CLAMP	1	
10A	YR2140.000	ANGLE	1	
10B	YR2020.000	BRANCH, BRANCH NOZZLE	1	
14	QZ0020.010	RIVEI	2	
15	GW0015.009	IDENTITY PLATE	1	

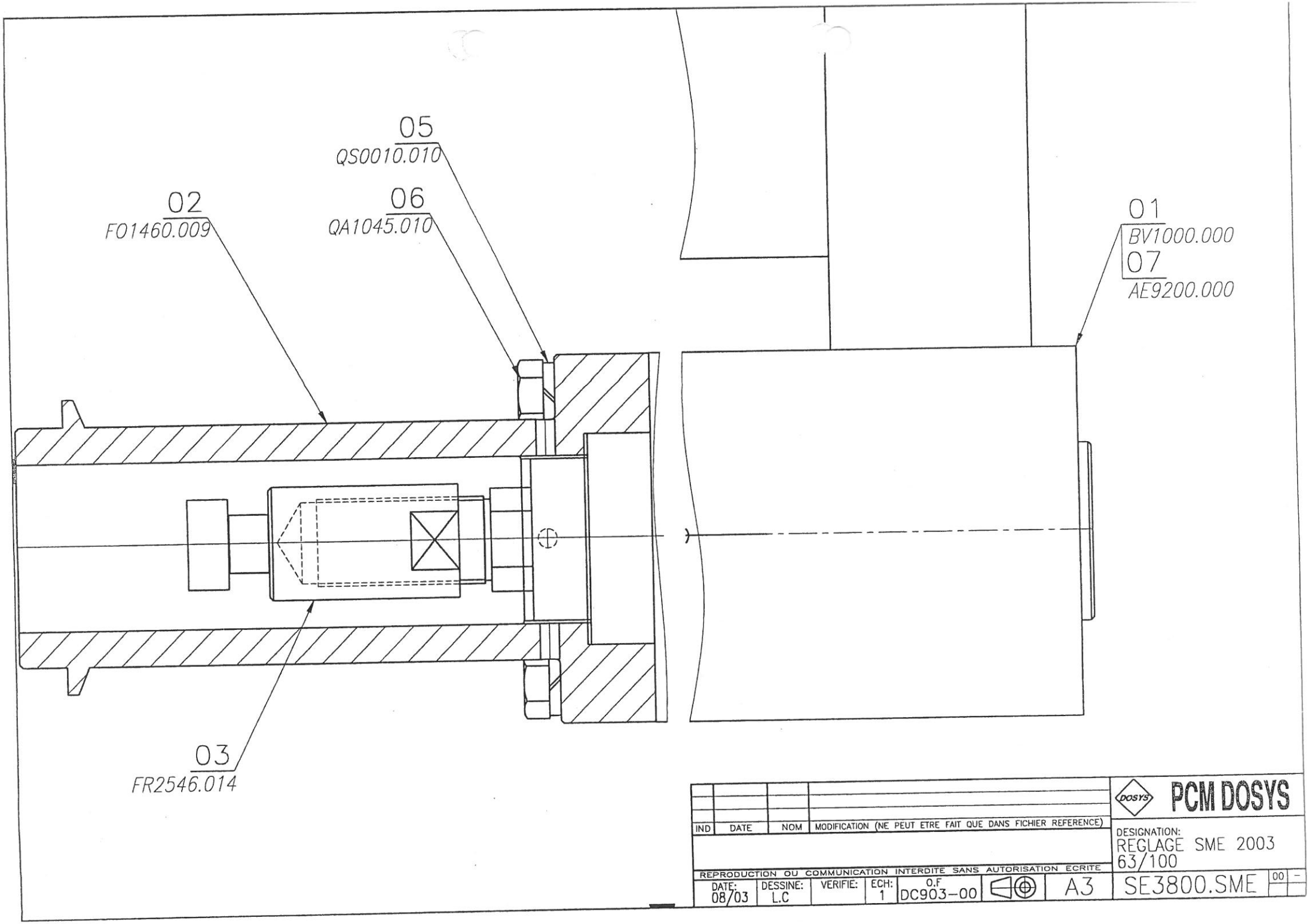
05
QS0010.010
06
QA1045.010
02
F01460.009
01
BV1000.000
07
AE9200.000
03
FR2546.014
IND
DATE
NOM
MODIFICATION (NE PEUT ETRE FAIT QUE DANS FICHIER REFERENCE)
REPRODUCTION OU COMMUNICATION INTERDITE SANS AUTORISATION ECRITE
DATE: 08/03
DESSINE: L.C
VERIFIE:
ECH: 1
O.F DC903-00
A3
PCM DOSYS
DESIGNATION:
REGLAGE SME 2003
63/100
SE3800.SME
00

Job Ref. : CD057-00 Dt 23/12/03 Page 1

Client : TETRA PAK

Parts list number SE3800.SME REGLAGE SME 2003 63-100

Item	Part numb.	Description	Qty	Par
01	BV1000.000	SERVOVERIN ELECTRIQUE	1	
02	FO1460.009	BRIDE ADAPT SME 63/100	1	
03	FR2546.014	EMBOUT PARKER DACC	1	
05	QS0010.010	WASHER	4	
06	QA1045.010	SCREW	4	
07	AE9200.000	SERVMOTEUR SYNCH BRUSHLES	1	

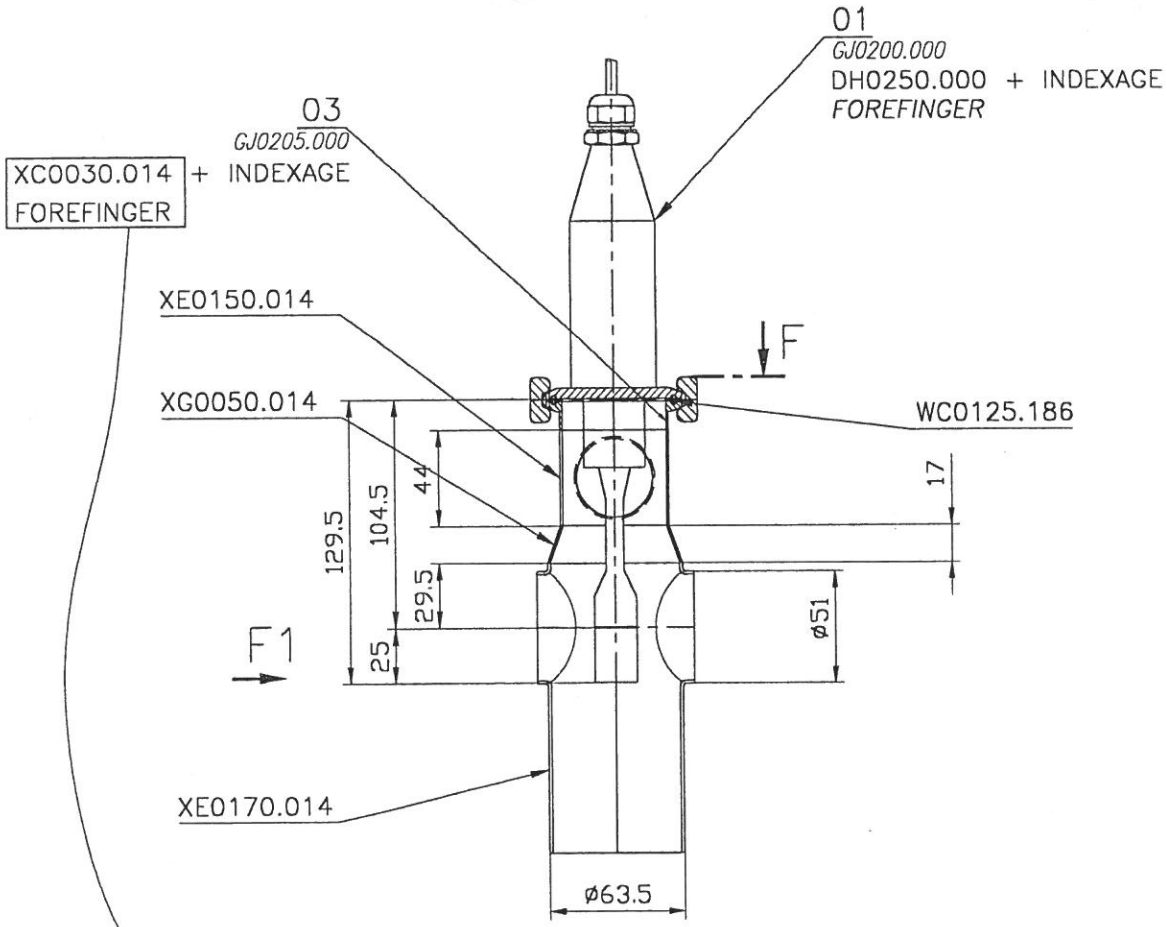

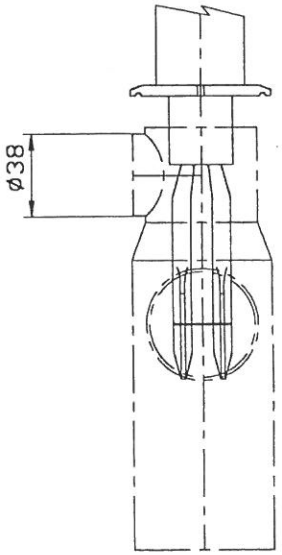

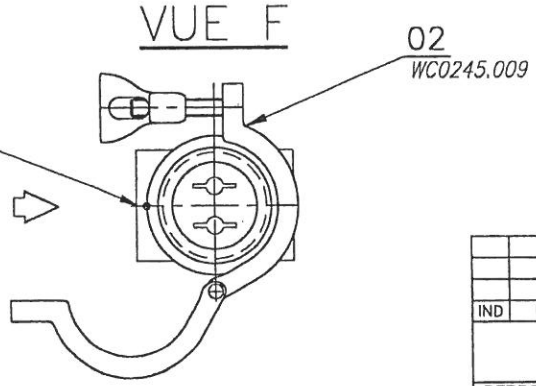

IND	DATE	NOM	MODIFICATION (NE PEUT ETRE FAIT QUE DANS FICHIER REFERENCE)

DATE:	DESSINE:	VERIFIE:	ECH:	O.F		
01/2001	L.D		0.4			A3

PCM DOSYS

DESIGNATION:
POT DE DETECTION
2 X 51

SET770.000 00

Job Ref. : CD057-00 Dt 23/12/03 Page 1

Client : TETRA PAK

Parts list number SET770.000 POT DE DETECTION 2X51

Item	Part numb.	Description	Qty	Par
01	GJ0200.000	PROBE	1	
02	WC0245.009	COLLAR	1	
03	GJ0205.000	INDEXAGE CLAMP DIA 51	1	

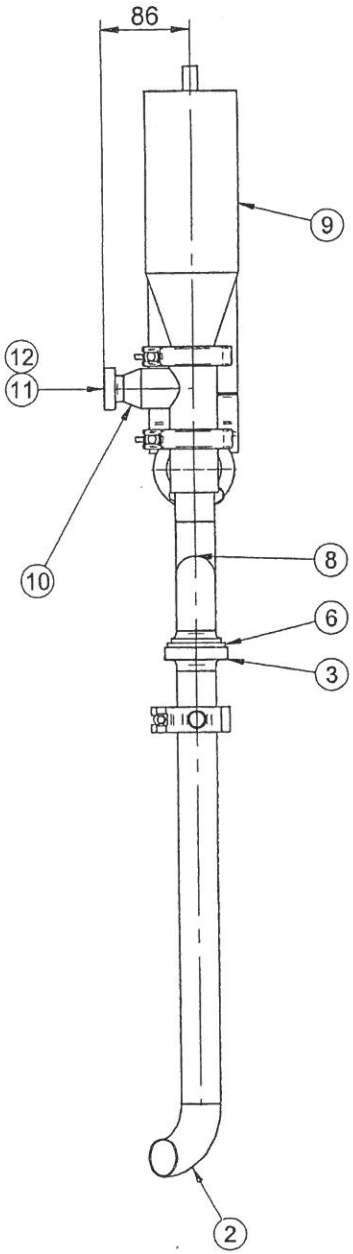

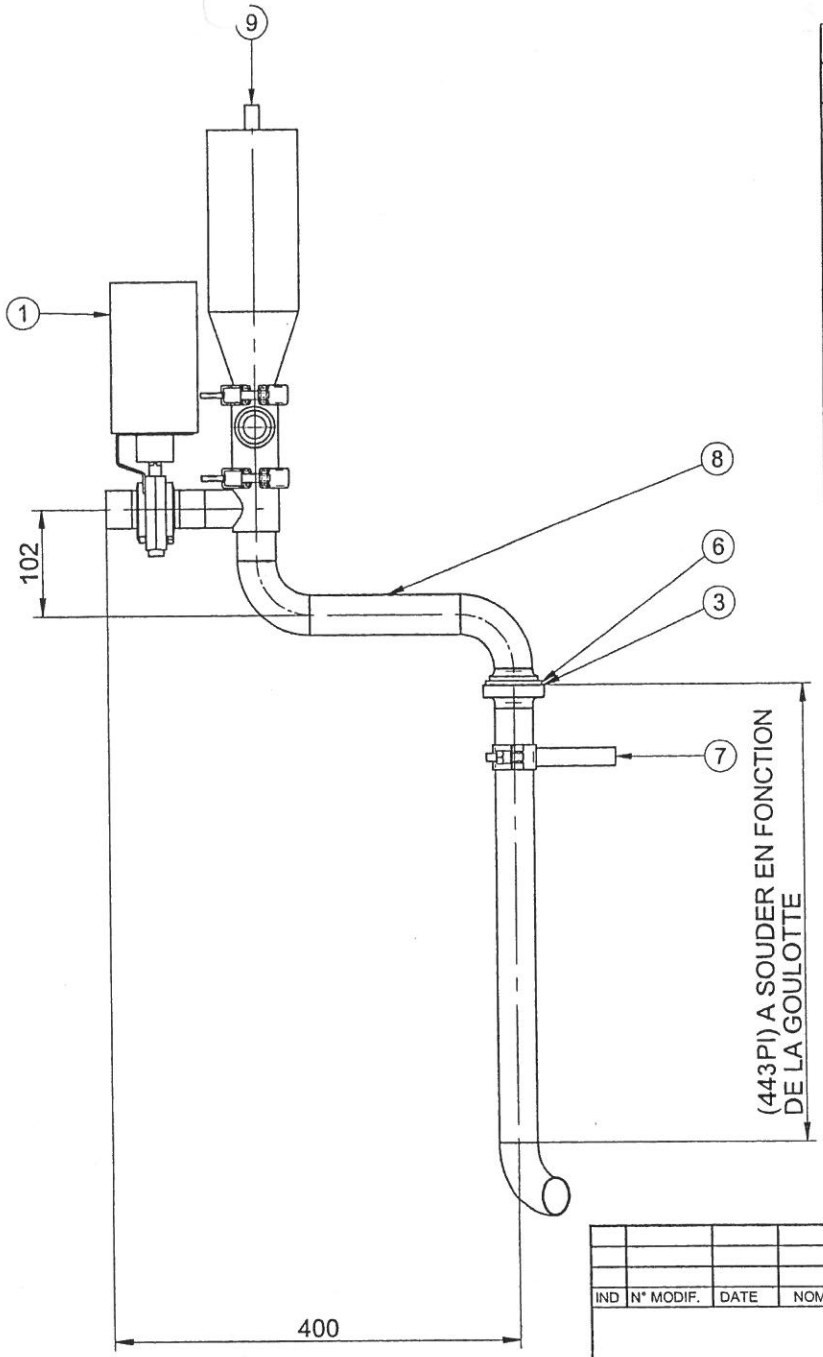

N°.	Code article	Désignation	Matière	Qté	Cat.
1	VA3110.000	Vanne LKB38 Auto		1	3
2	XJ0080.014	Coude 90 spd 1.5d Φ38	Inox 316 L	3	3
3	XB0080.014	Nez à souder sms Φ38	Inox 316 L	1	3
4	WB0260.009	Ecrou sms Φ38	Inox 304 L	1	3
5	WB0080.185	Joint L sms Φ38 EPDM	EPDM	1	3
6	XB0140.014	Douille à souder sms Φ38	Inox 316 L	1	3
7	WL0080.009	Collier a souder Φ38	Inox 304 L	1	3
8	UA0120.014	Tube Φ38	Inox 316 L	1	3
9	VA3200.000	Vanne Type SRCΦ38		1	3
10	XG0010.014	redution concen Φ38/25 coupé	Inox 316 L	1	3
11	XB0070.014	Nez à souder sms Φ25	Inox 316 L	1	3
12	WB0070.185	Joint L sms Φ25	Silicone	1	3

POIDS (kg) =
WEIGHT (kg)

IND	N° MODIF.	DATE	NOM	DESIGNATION MODIFICATION

DATE:	DESSINE:	VERIFIE:	ECH:	O.F.		
08/2003	L.C		0.2	CD057-00		A3

PCM DOSYS

DESIGNATION :
TUYAUTERIE EVENT
POUS. O P ALFA L

SET999.J90

Ind: 00
folio:

	Part num.	Description	Designacion	Designation	Qté	Cat.
1	XB0090.014	Nose	Punta	Nez	1	3
2	WB0090.185	Gasket	Junta	Joint	1	3
3	XB0610.014	Fitting	Emplame	Nez à souder	2	3
4	XJ0090.014	Elbow	Codo	Coude	4	3
5	UA0130.014	Tube	Tubo	Tube	4	3
6	WL0090.009	Collar	Collarin	Collier	3	3
7	WB0537.186	Gasket	Junta	Joint	2	3
8	XE0030.014	Tee	Te	Té	1	3
9	QU0020.009	Accessories	Accesorios	Accessoires	1	3

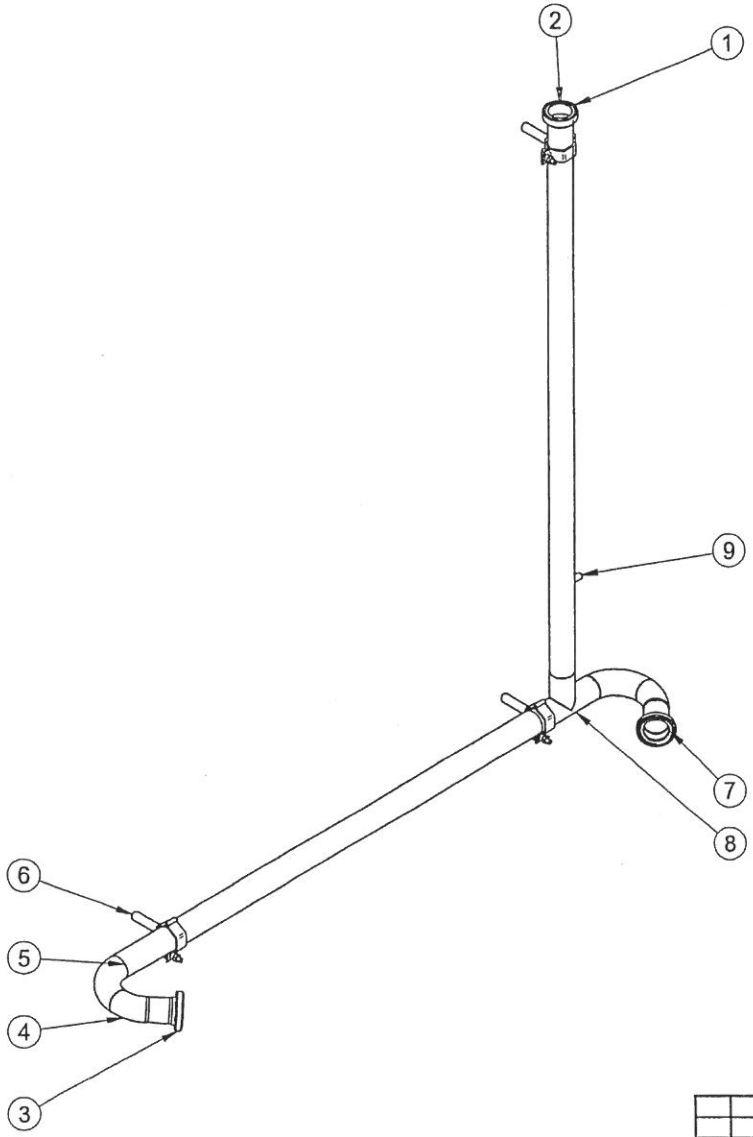

POIDS (kg) =
WEIGHT (kg)

IND	N° MODIF.	DATE	NOM	DESIGNATION MODIFICATION

DATE:	DESSINÉ:	VERIFIÉ:	ECH:	O.F.		
08/2003	L.C		0.1	CD057-00		A3

PCM DOSYS

DESIGNATION :
Tuyauterie NEP
Ø51 1 station

SET999.J85

Ind: 00
folio:

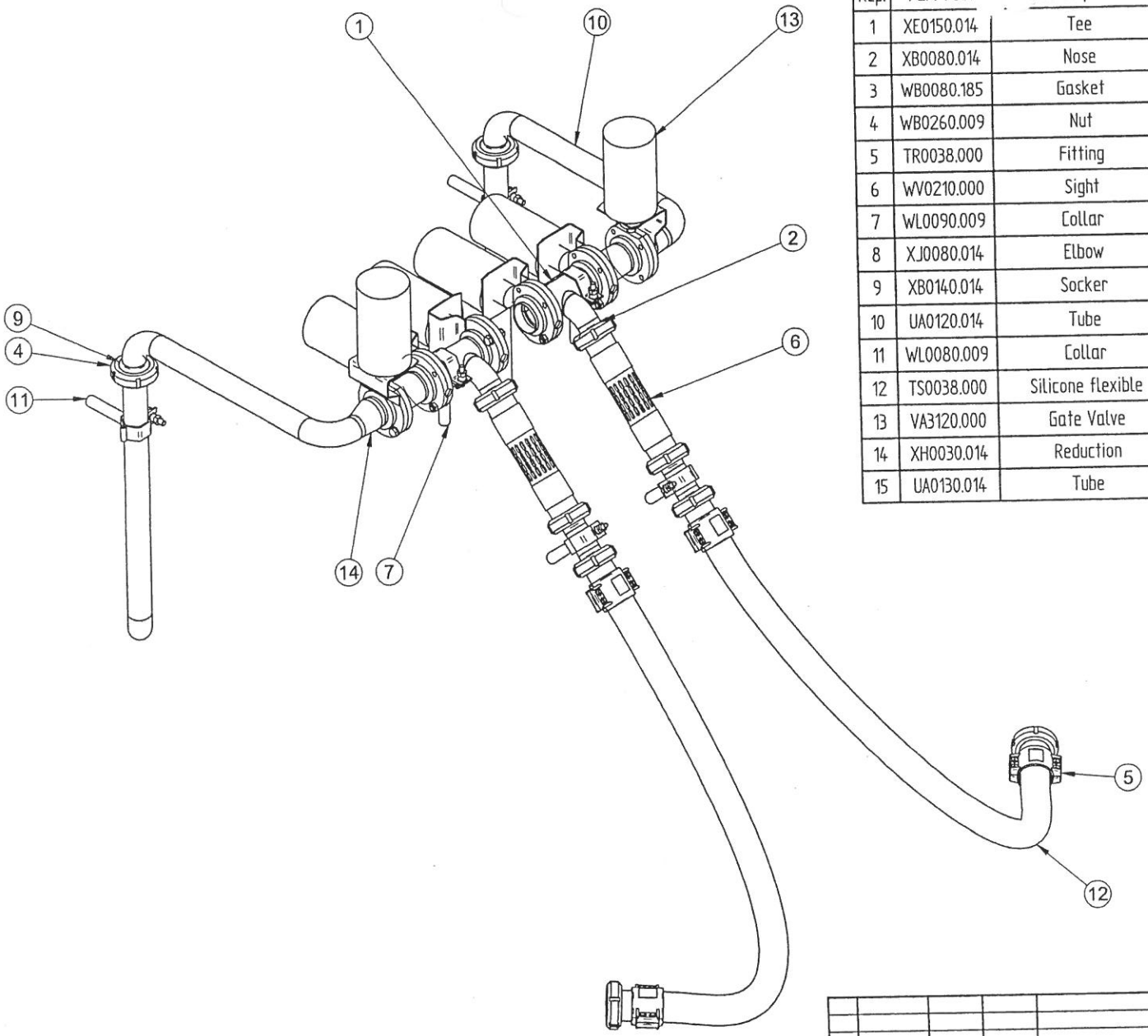

Rep.	Part num.	Description	Designacion	Designation	Qté	Cat.
1	XE0150.014	Tee	Te	Té	2	3
2	XB0080.014	Nose	Punta	Nez	8	3
3	WB0080.185	Gasket	Junta	Joint	8	3
4	WB0260.009	Nut	Tuerca	Ecrou	6	3
5	TR0038.000	Fitting	Empalme	Raccord	4	3
6	WV0210.000	Sight	Visor	Viseur	2	3
7	WL0090.009	Collar	Collarin	Collier	2	3
8	XJ0080.014	Elbow	Codo	Coude	8	3
9	XB0140.014	Socker	Casquillo	Douille	2	3
10	UA0120.014	Tube	Tubo	Tube	3	3
11	WL0080.009	Collar	Collarin	Collier	4	3
12	TS0038.000	Silicone flexible	Flexible silicona	Flexible silicone	2	3
13	VA3120.000	Gate Valve	Valvula de compuerta	Vanne	6	3
14	XH0030.014	Reduction	Reduccion	Réduction	2	3
15	UA0130.014	Tube	Tubo	Tube	1	3

POIDS (kg) =
WEIGHT (kg)

IND	N° MODIF.	DATE	NOM	DESIGNATION MODIFICATION

PCM DOSYS

DESIGNATION :
TUYAUTERIE AMORC.
P ALFA L SMS Ø38

DATE:	DESSINE:	VERIFIE:	ECH:	O.F.		
08/2003	L.C		0.15	CD057-00	A3	SET999.J80

Ind: 00
folio:

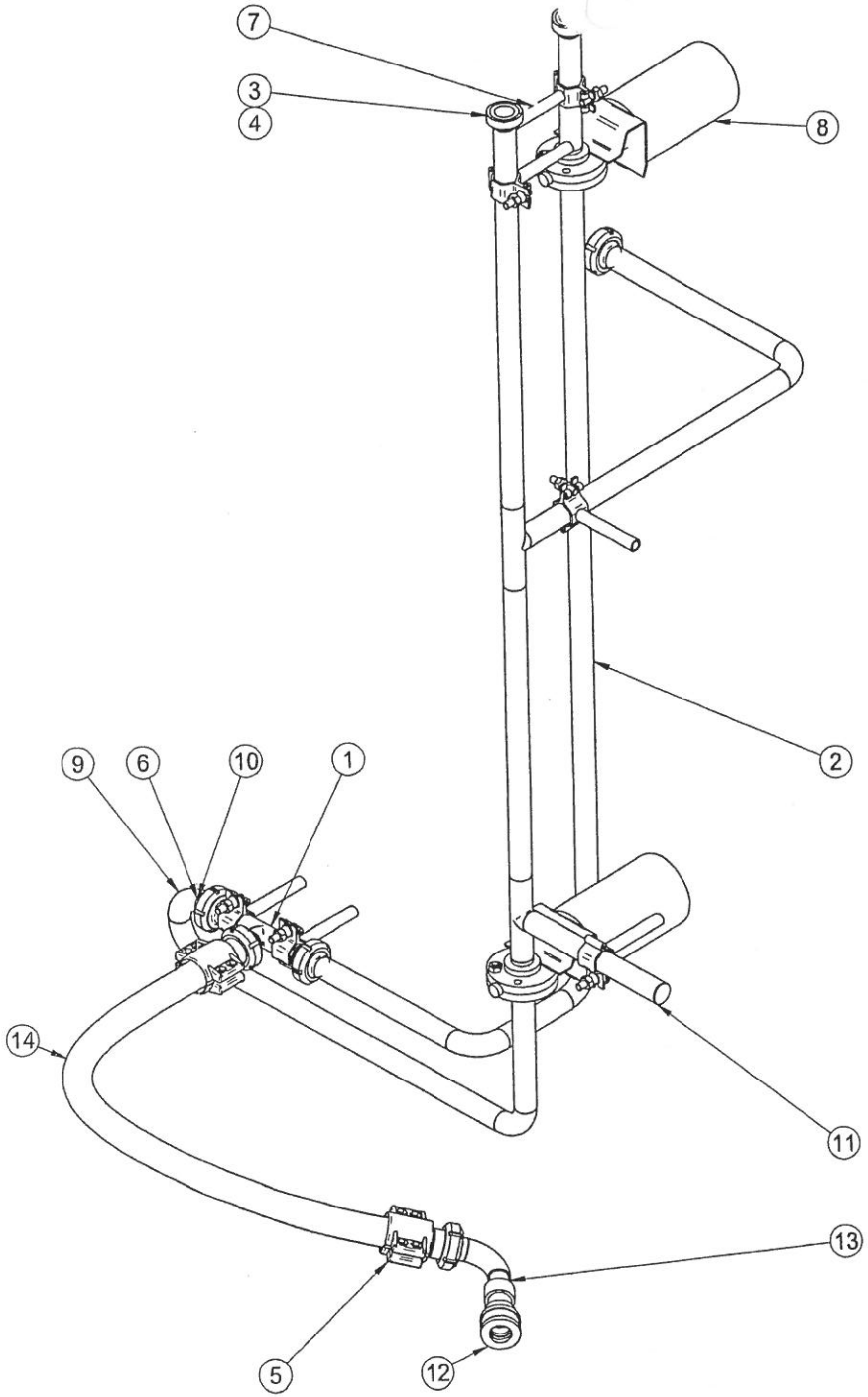

Rep.	Part	Description	Designacion	Description	Qté	Cat.
1	XE0070.014	Tee	Te	Té	3	3
2	UA0100.014	Tube	Tubo	Tube	7	3
3	XB0070.014	Nose	Punta	Nez	6	3
4	WB0070.185	Gasket	Junta	Joint	6	3
5	TR0025.000	Fitting	Empalme	Raccord	2	3
6	WB0250.009	Nut	Tuerca	Ecrou	5	3
7	WL0070.009	Collar	Collarin	Collier	6	3
8	VA3100.000	Gate valve	Valvula de compuerta	Vanne	2	3
9	XJ0070.014	Elbow	Codo	Coude	7	3
10	XB0130.014	Socker	Casquillo	Douille	3	3
11	U00020.014	Accessories	Accesorios	Accessoires	1	1
12	TT0230.000	Coupler	Acoplador	Coupleur	1	3
13	QU0040.010	Accessories	Accesorios	Demi embout	1	3
14	TS0025.000	Flexible Silicone	Silicone Flexible	Flexible Silicone	1	3

IND	N° MODIF.	DATE	NOM	DESIGNATION MODIFICATION

DATE:	DESSINE:	VERIFIE:	ECH:	O.F.		
08/2003	L.C			CD057-00		A3

PCM DOSYS

DESIGNATION :
Tuyauterie Eau-Vapeur
P ALFA L

SET999.J75

Ind: 00
folio:

Ri	t num.	Description	Designacion	Déscription	Qté	Cat.
1	VA3125.000	Gate valve	Valvula de compuerta	Vanne	1	3
2	XB0600.014	Socker	Casquillo	Douille	1	3
3	TT0235.000	Coupler	Acoplador	Coupleur M	1	3
4	WB0536.009	Nut	Tuerca	Ecrou	1	3
5	XB0080.014	Nose	Punta	Nez	1	3
6	WB0080.185	Gasket	Junta	Joint	1	3
7	QU0040.010	Accessories	Accesorios	Demi embout	1	3
8	XI0030.014	Reduction	Reducción	Réduction	1	3
9	XE0140.014	Tee	Te	Té	1	3
10	VA3106.000	Gate valve	Valvula de compuerta	Vanne	1	3
11	XB0070.014	Nose	Punta	Nez	1	3
12	WB0070.185	Gasket	Junta	Joint	1	3

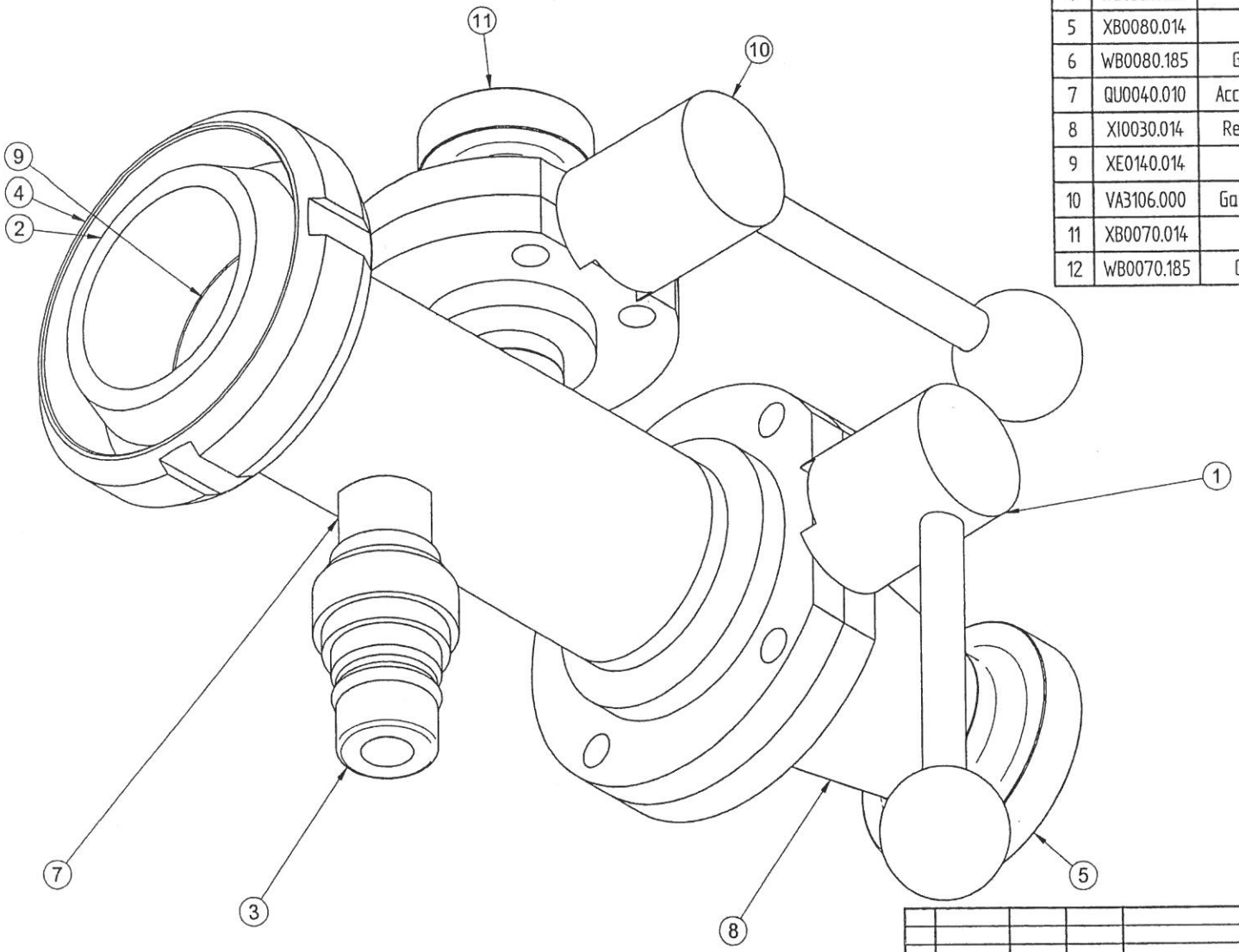

POIDS (kg) =
WEIGHT (kg)

IND	N° MODIF.	DATE	NOM	DESIGNATION MODIFICATION

DATE:	DESSINE:	VERIFIE:	ECH:	O.F.		
08/2003	L.C		1	CD057-00		A3

PCM DOSYS

DESIGNATION :
MANCHETTE P ALFA L
DIN50-SMS38

SET999.J70

Ind: 00
folio:

Rep	Part num.	Description	Designacion	[illegible]tion	Qté	Cat.
1	XB0070.014	Nose	Punta	Nez	3	3
2	XJ0070.014	Elbow	Codo	Coude	3	3
3	XB0130.014	Socker	Casquillo	Douille	2	3
4	WB0250.009	Nut	Tuerca	Ecrou	4	3
5	WB0070.185	Gasket	Junta	Joint	3	3
6	WL0070.009	Collar	Collarin	Collier	2	3
7	UA0100.014	Tube	Tubo	Tube	1	3
8	TR0025.000	Fitting	Empalme	Raccord	2	3
9	TS0025.000	Flexible Silicone	Flexible Silicona	Flexible Silicone	2	3

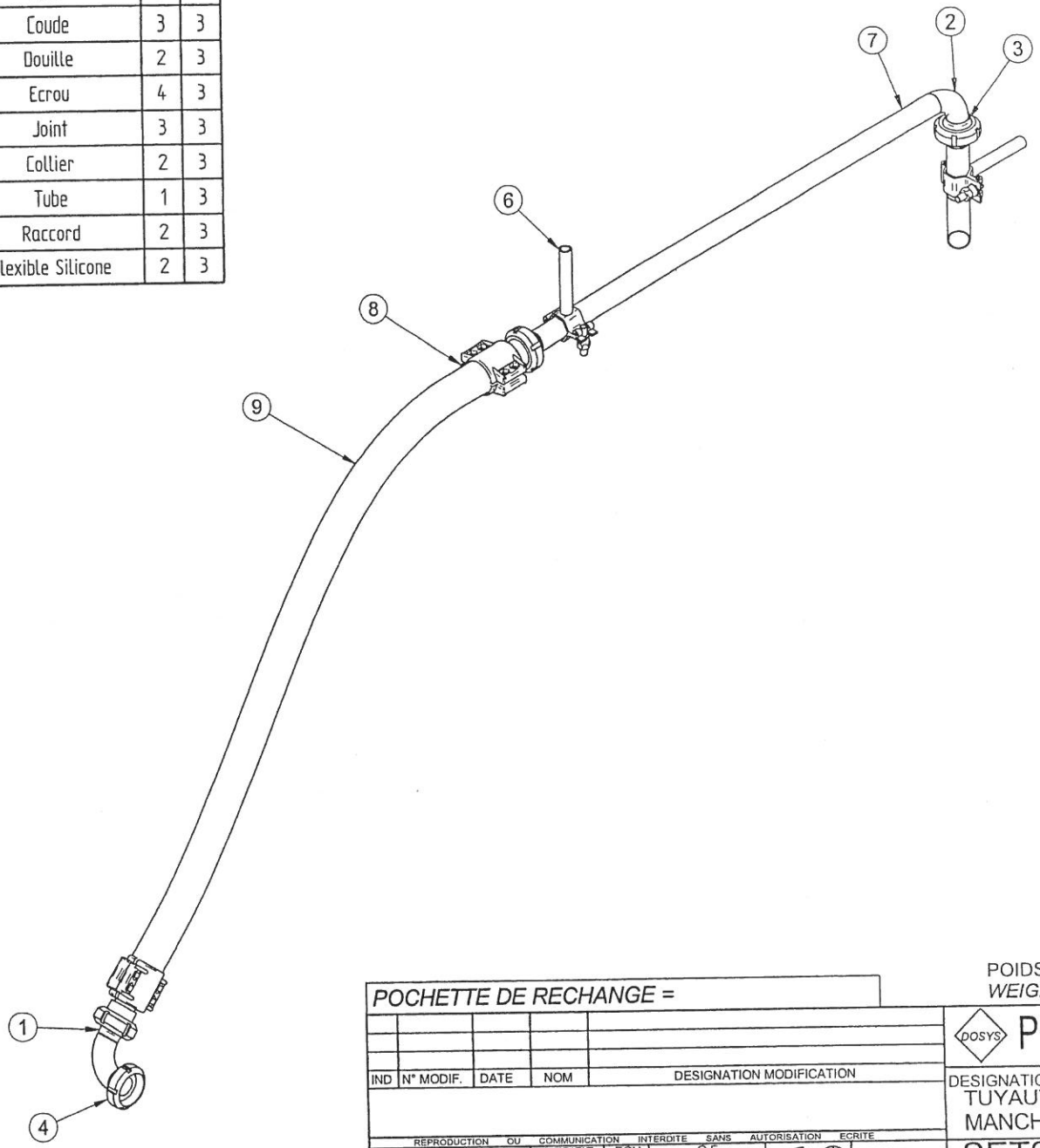

POCHETTE DE RECHANGE =

POIDS (kg) =
WEIGHT (kg)

IND	N° MODIF.	DATE	NOM	DESIGNATION MODIFICATION

PCM DOSYS

DESIGNATION :
TUYAUTERIE PURGE
MANCHETTES

DATE:	DESSINE:	VERIFIE:	ECH:	O.F.		
20/02/03	L.C		0.2	CD014-00	A3	

SET999.F80 Ind: 00 folio:

ep.	Qté	Part num.	Benaming	Description	Désignation	Cat.
1	2	XJ0230.014	Bochtstuk	Elbow	Coude	3
2	1	XB0170.014	Mof	Socker	Douille	3
3	1	WB0290.009	Moer	Nut	Ecrou	3

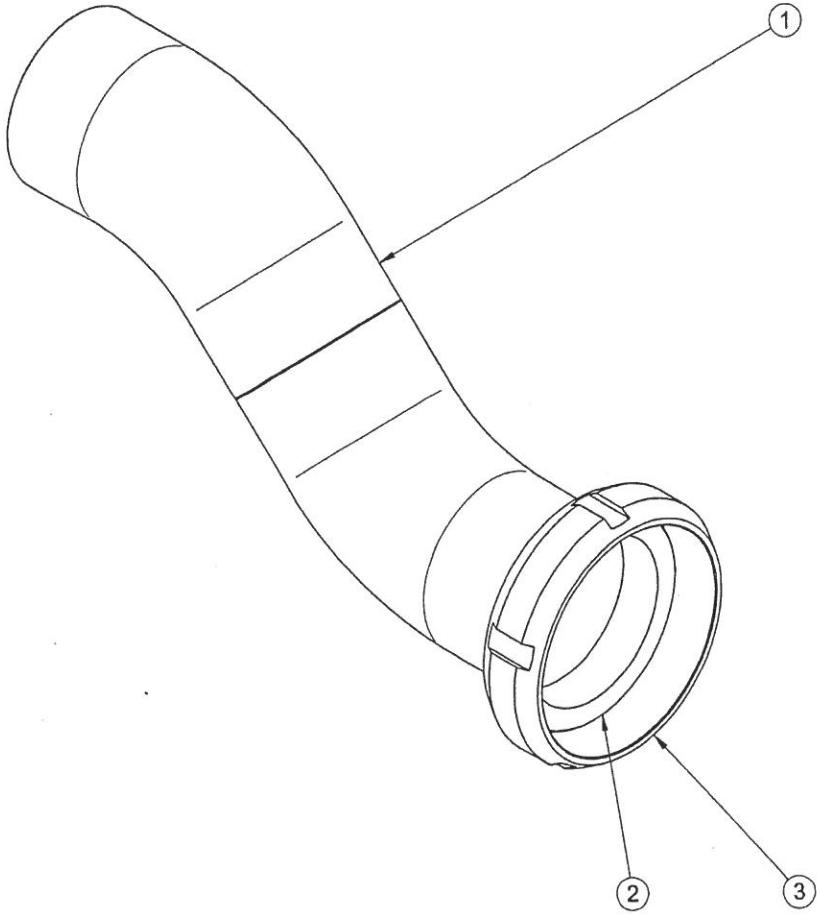

POIDS (kg) =
WEIGHT (kg)

IND	N° MODIF.	DATE	NOM	DESIGNATION MODIFICATION

PCM DOSYS

DESIGNATION :
TOEBEHORENSET
GOOT

DATE:	DESSINE:	VERIFIE:	ECH:	O.F.		
08/03/02	L.C		0.5	CC004-00	A3	

SET980.G60

Ind: 00
folio:

Rep.	Part num.	Description	Designacion	Designation	Qté	Cat.
1	XG0035.014	Reduction	Reducciòn	Réduction	1	3
2	XB0130.014	Socker	Casquillo	Douille	1	3
3	UA0150.014	Tube	Tubo	Tube	1	3
4	WB0250.009	Nut	Tuerca	Ecrou	1	3

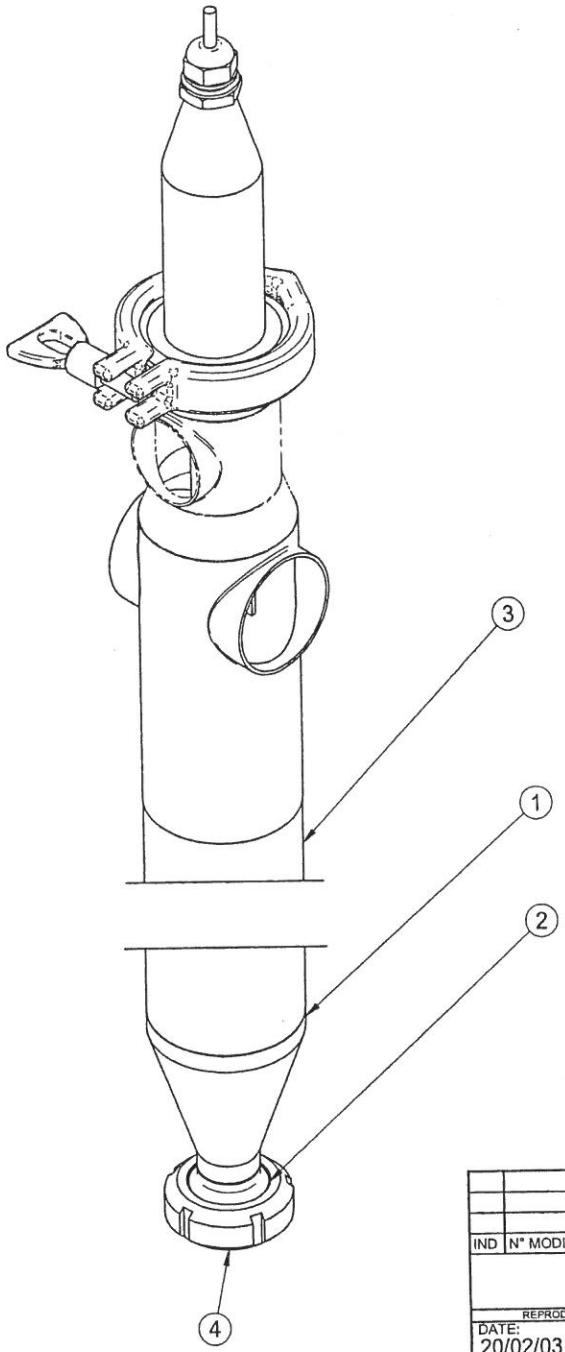

POIDS (kg) =
WEIGHT (kg)

IND	N° MODIF.	DATE	NOM	DESIGNATION MODIFICATION

DATE:	DESSINE:	VERIFIE:	ECH:	O.F.		
20/02/03	L.C		0.5	CD014-00		A3

PCM DOSYS

DESIGNATION :
Tuyauterie Environ.
pot

SET999.F65

Ind:
folio:

Rep.	Code article	Désignation	Matière	Qté	Cat.
1	QS0006.010	Rondelle grower W6	Inox A4	12	2
2	QA0620.010	Vis-H M6x20	Inox A2	12	2
3	CH9620.009	Chassis Protection SME		1	4

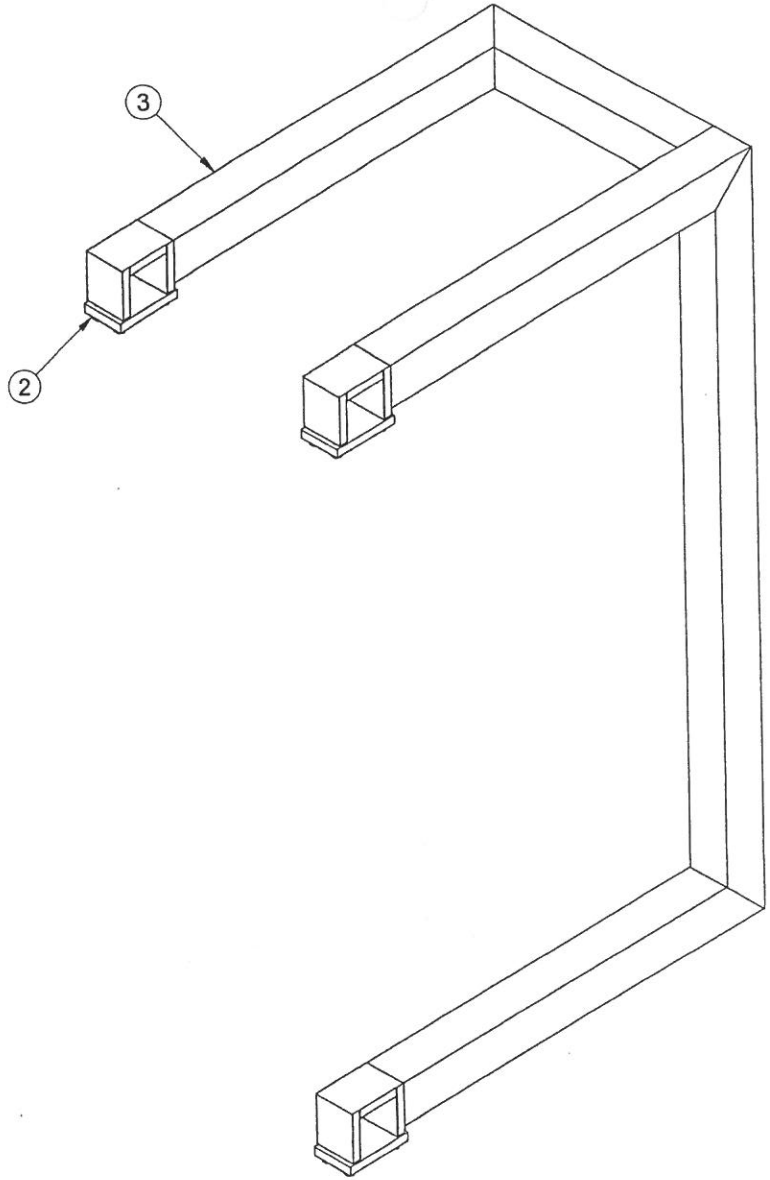

POIDS (kg) =
WEIGHT (kg)

IND	N° MODIF.	DATE	NOM	DESIGNATION MODIFICATION

PCM DOSYS

DESIGNATION :
ENS. CHASSIS
PROTECTION SME

DATE:	DESSINE:	VERIFIE:	ECH:	O.F.		
08/2003	L.C		0.2	CD057-00	A3	SEG999.E70

Ind: 00
folio:

Rep.	Code article	Désignation	Matière	Qté	Cat.
1	FU1890.009	Capot Protecteur SME	Inox 304 L	1	1
2	UD3030.009	Cornière 30x30x3	Inox 304 L	1	1
3	QE0012.010	Ecrou H M12-10	Inox 316 L	4	2
4	QE0008.010	Ecrou inox HU M8	Inox 316 L	9	2
5	QS0010.010	Rondelle grower W10	Inox A4	12	2
6	QS0008.010	Rondelle grower W8	Inox A4	2	2
7	QR0012.010	Rondelle plate inox M12	Inox A2	4	2
8	QR0008.010	Rondelle plate inox M8	Inox A2	8	2
9	QA1016.010	Vis H M10x16	Inox A2	12	2
10	QA0820.010	Vis H M8x20	Inox A2	1	2
11	YA0035.000	Cablofil 30/50 L=1000	Inox 304 L	1	3
12	GU0674.009	Plot pour coffert H:40	Inox 304 L	8	3
13	LC0025.000	Vérin articule		4	3
14	CH9625.009	Chassis CD057		1	4

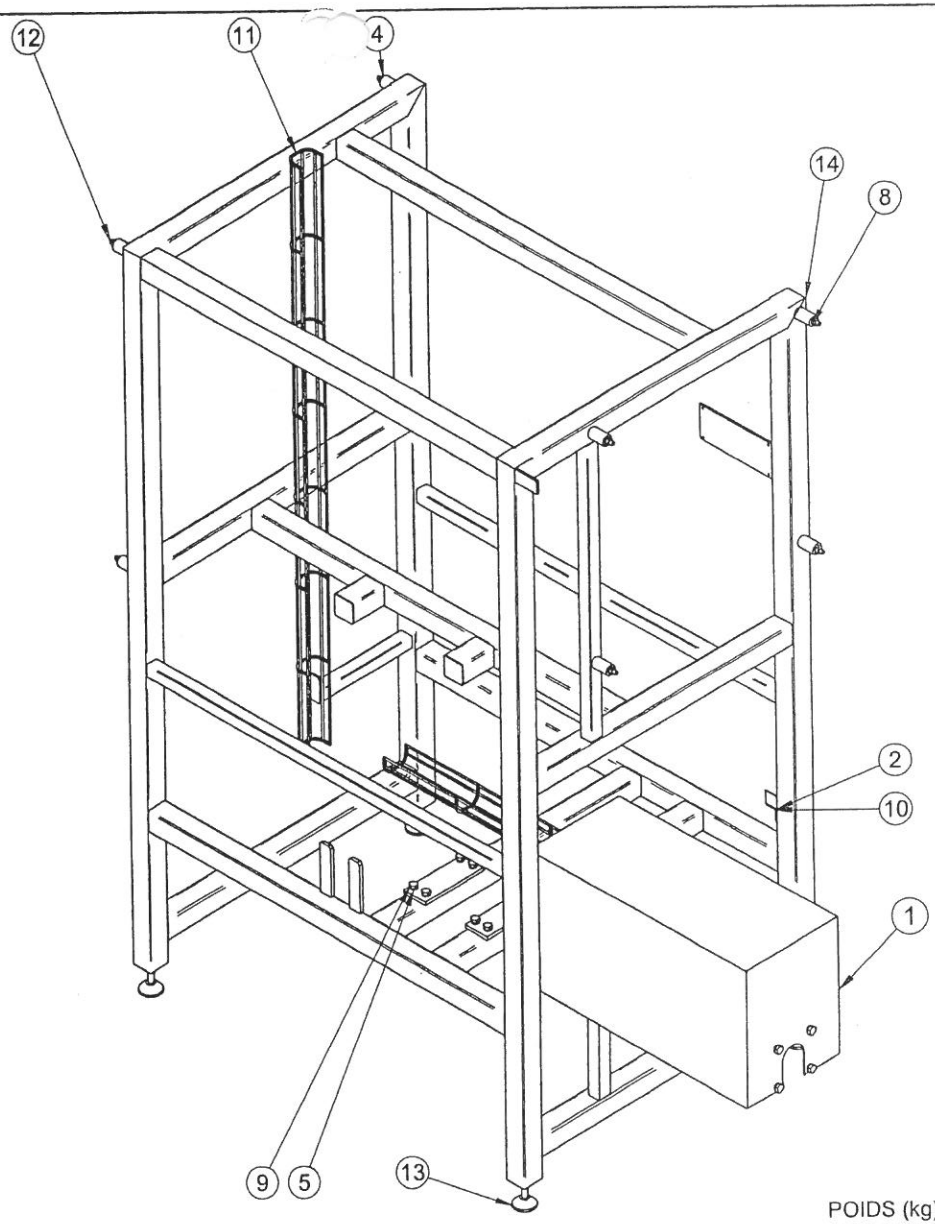

POIDS (kg) =
WEIGHT (kg)

IND	N° MODIF.	DATE	NOM	DESIGNATION MODIFICATION

DATE:	DESSINÉ:	VERIFIÉ:	ECH:	O.F.		
08/2003	L.C		0.1	CD057-00		A3

PCM DOSYS

DESIGNATION :
ENS. CHASSIS
P ALFA L CD057

SEG999.E65

Ind: 00
folio:

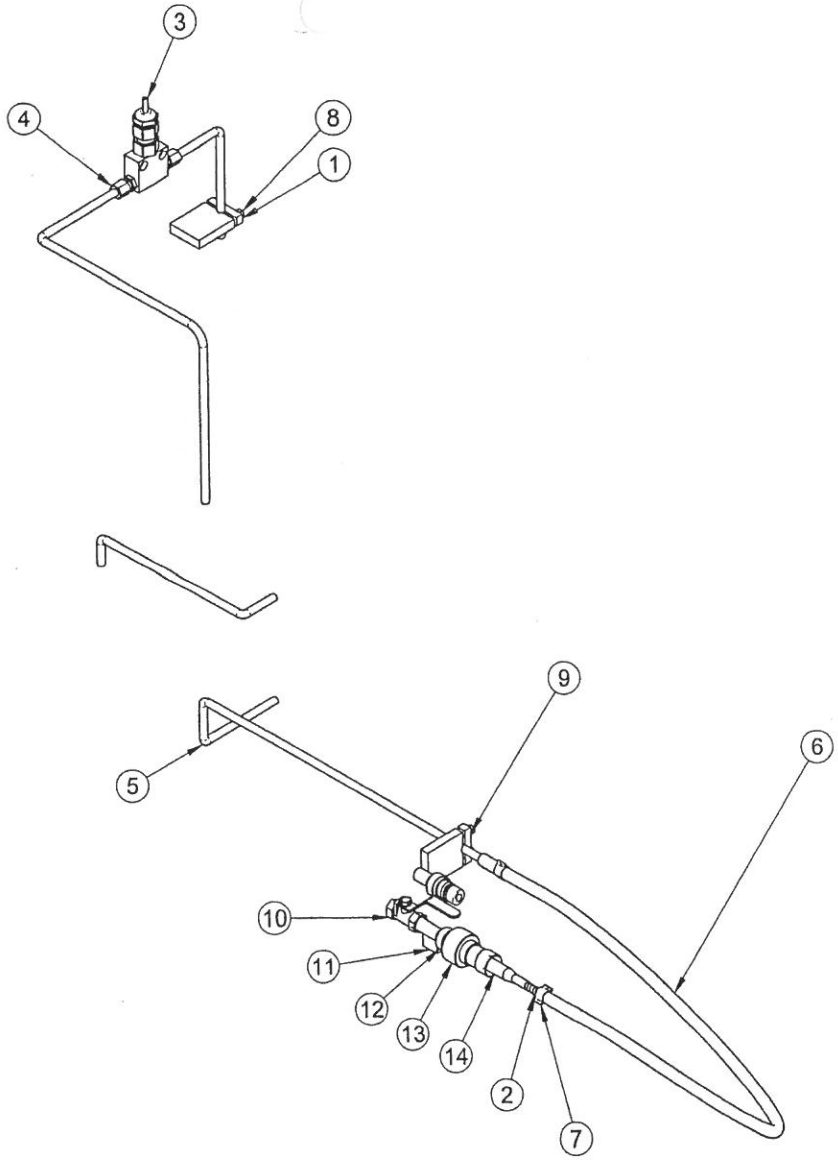

Rep.	Code article	Désignation	Matière	Qté	Cat.
1	GN0200.009	Collier pour tube Φ6-8	Inox 316 L	2	1
2	YR6004.000	Douille cannelée	Inox 316L	2	3
3	DE1220.000	Débit sonde H-T + ampli	Inox 316 L	1	3
4	YR2020.000	Piqua DR8 1/8 1805.08.10	Inox 316 L	2	3
5	UE0140.014	Tube Φ6-8	Inox 316 L	2	3
6	TL0340.000	Tube TECHNOSILFOOD Φ6 int	Silicone	1	3
7	YE0106.000	Collier pour tube TECHNOSILFOOD Φ6	Inox 316L	2	3
8	QA0516.010	Vis-H M5x16	Inox A2	4	2
9	QS0005.010	Rondelle grower W5	Inox A4	4	2
10	VBM110.000	Robinet à boule DN8 1-4 GAZ		1	3
11	YR2701.000	Mamelon male 1-4	Inox 316L	1	1
12	TT0245.000	Coupleur M 1-4 GAZ	Inox 316L	2	3
13	TT0240.000	Coupleur F 1-4 GAZ	Inox 316L	1	3
14	QU0020.009	Demi-embout male 1-4	Inox	2	3

POCHETTE DE RECHANGE =

POIDS (kg) =
WEIGHT (kg)

IND	N° MODIF.	DATE	NOM	DESIGNATION MODIFICATION

PCM DOSYS

DESIGNATION :
TUYAUTERIE
B.HYDRAULIQUE

DATE:	DESSINE:	VERIFIE:	ECH:	O.F.		
10/02/03	L.C		0.2	CD004-00	A3	SET999.F20

Ind:00
folio:

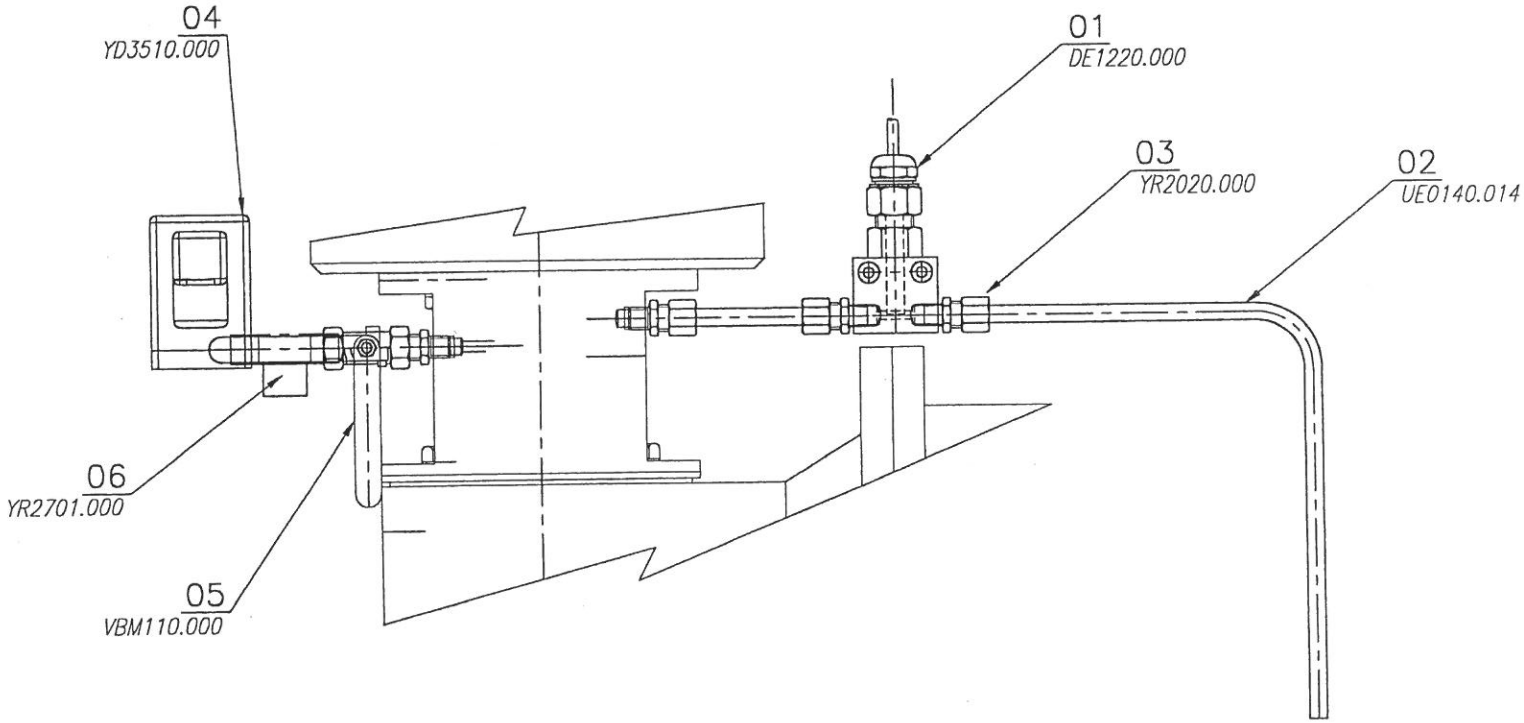

POIDS (kg) =
WEIGHT (kg)

IND	DATE	NOM	MODIFICATION (NE PEUT ETRE FAIT QUE DANS FICHIER REFERENCE)

DATE:	DESSINE:	VERIFIE:	ECH:			
08/03	L.C			0.F		A3

PCM DOSYS

DESIGNATION:
BH
ELECT+ROB+CONTROLEE

SET999.J95 | 00 | -

Job Ref. : CD057-00 Dt 23/12/03 Page 1

Client : TETRA PAK

Parts list number SET999.J95 BH ELECTRO+ROB+CONTROLEE

Item	Part numb.	Description	Qty	Par
01	DE1220.000	DEBIT SONDE H/T + AMPLI	1	
1	DE0117.000	BOX, UNIT	1	
02	UE0140.014	TUBE	1	
03	YR2020.000	BRANCH, BRANCH NOZZLE	4	
04	YD3510.000	GATE VALVE	1	
05	VBM110.000	VALVE	1	
06	YR2701.000	NIPPLE	1	
1	DE0119.010	ACCESSORIES	1	

Rep.	Qté	Part num	Description	Descripciòn	Désignation
1	1	CH5205.009	Kennel	Canalon	Goulotte
2	1	WB0270.009	Nut	Tuerca	Ecrou
3	1	WB0090.185	Gasket	Junta	Joint
4	1	WB0111.185	Gasket	Junta	Joint
5	1	XB0210.014	Nut bottom	Fondo tuerca	Fond d'ecrou

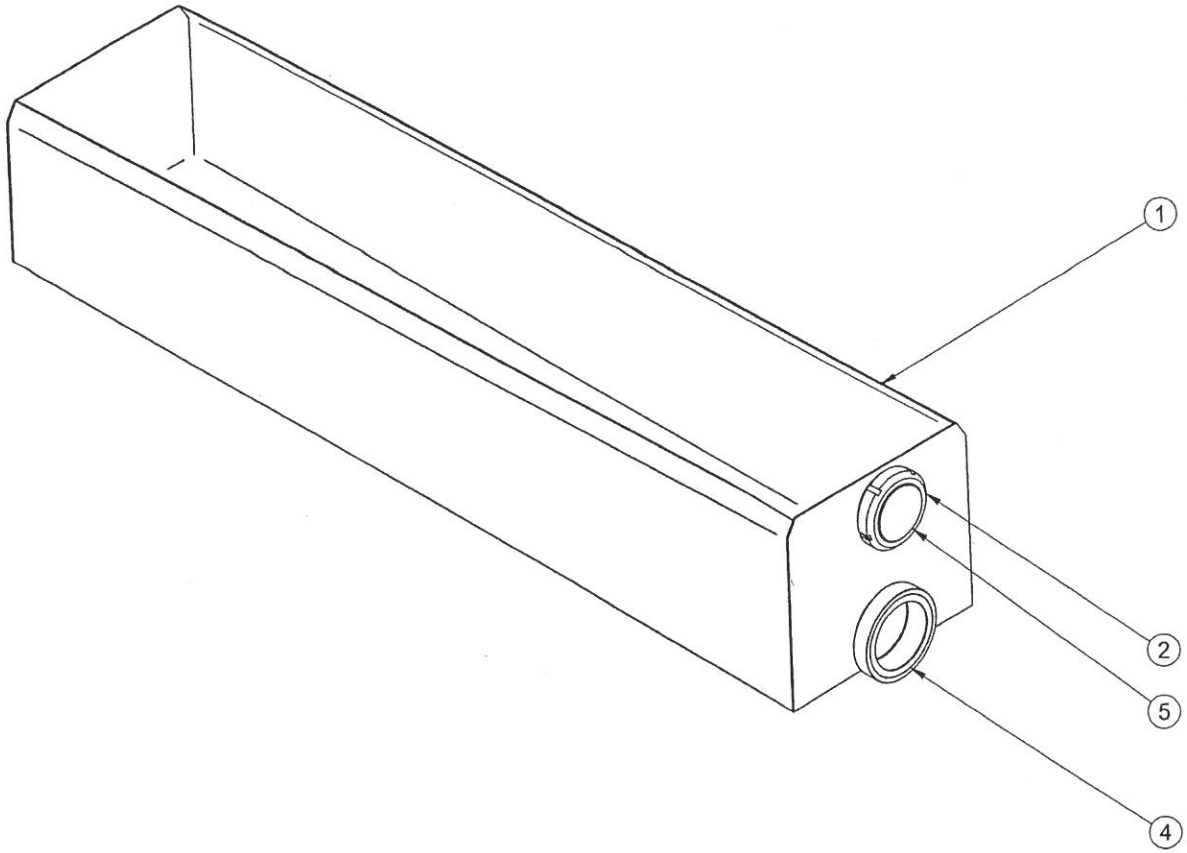

POIDS (kg) =
WEIGHT (kg)

IND	N° MODIF.	DATE	NOM	DESIGNATION MODIFICATION

DATE:	DESSINÉ:	VERIFIÉ:	ECH:	O.F.		
16/08/01	N.B.		0.2			A3

PCM DOSYS

DESIGNATION :
ENS. GOULOTTE
STANDARD 1 STATION

SEG999.080

Ind: 00
folio:

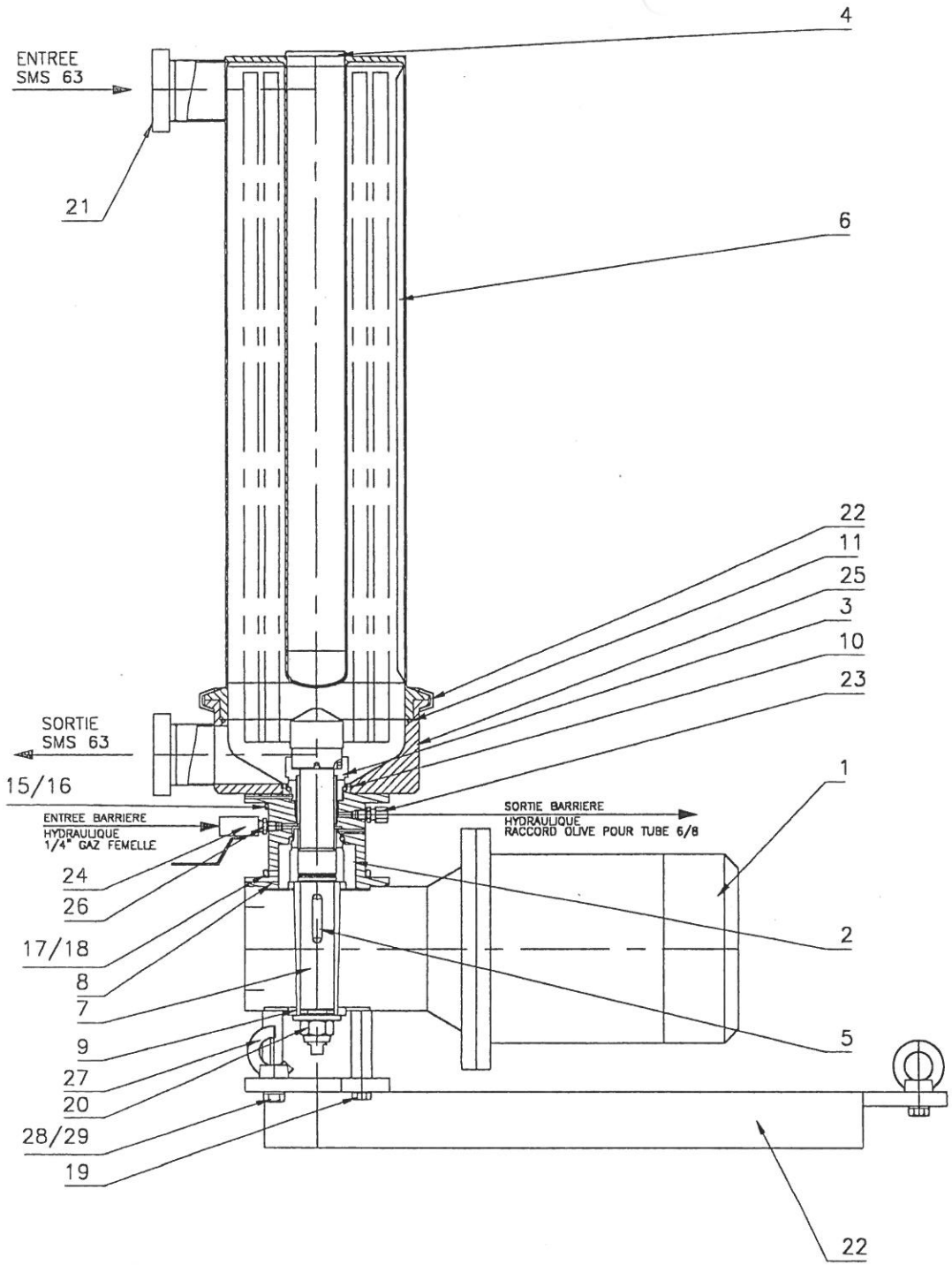

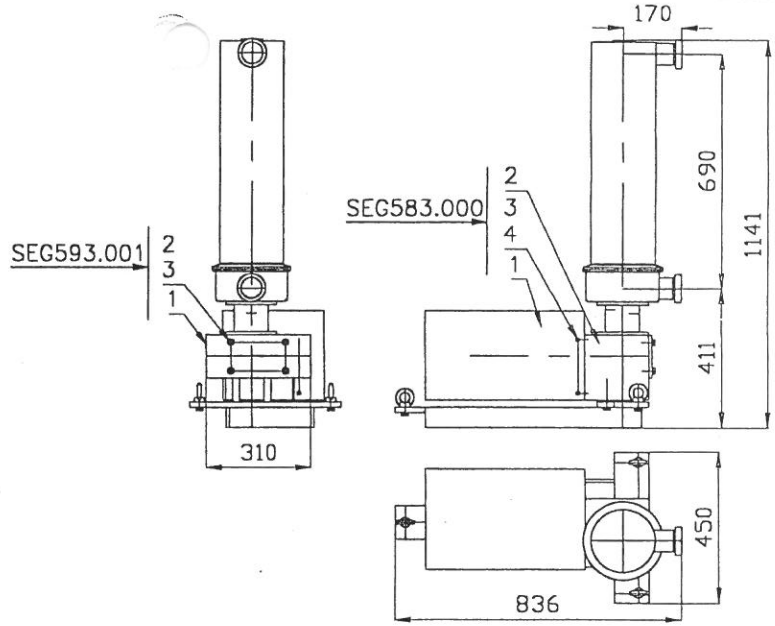

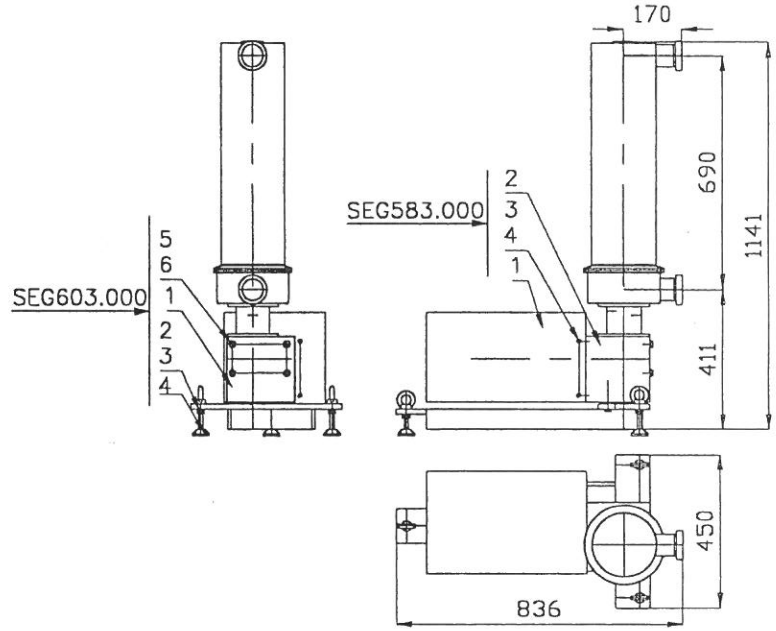

IND	DATE	NOM	MODIFICATION (NE PEUT ETRE FAIT QUE DANS FICHIER REFERENCE)

PCM DOSYS

DESIGNATION:
DOSYMIX DM4000
SMS 63

DATE:	DESSINE:	VERIFIE:	ECH:	O.F		A3	SEN660.000	00
02/1997	L.H							

Job Ref. : CD057-00 Dt 23/12/03 Page 1

Client : TETRA PAK

Parts list number SEN660.000 DOSYMIX DM4000 SMS63

Item	Part numb.	Description	Qty	Par
01	AE0090.000	ELECTRIC MOTOR	1	
02	40935 000	MECHANICAL SEAL	1	
03	45953 000	MECHANICAL SEAL	1	
04	BP0061.000	PLUG	1	
06	FY0036.014	ENVELOPPE DM4000 SMS	1	
07	FY0037.014	ARBRE HELICE	1	
10	JBS570.SIL	GASKET, SEAL	1	
11	JBV141.186	GASKET, SEAL	1	
15	QA1025.010	SCREW	4	
16	QS0010.010	WASHER	7	
17	QA0820.010	SCREW	4	
19	QA1099.010	SCREW	4	
20	QF0020.010	NUT	1	
21	WB0100.SIL	GASKET, SEAL	2	
22	WC0278.009	COLLAR	1	
22	CH3760.009	CHASSIS	1	
23	YR2020.000	BRANCH, BRANCH NOZZLE	1	
24	VBM110.000	VALVE	1	
25	GO0671.014	FLANGE	1	
26	YR2700.000	NIPPLE	1	
27	QX0012.010	ANNULUS, RING	3	
28	QA1230.010	SCREW	3	
29	QR0012.010	WASHER	3	

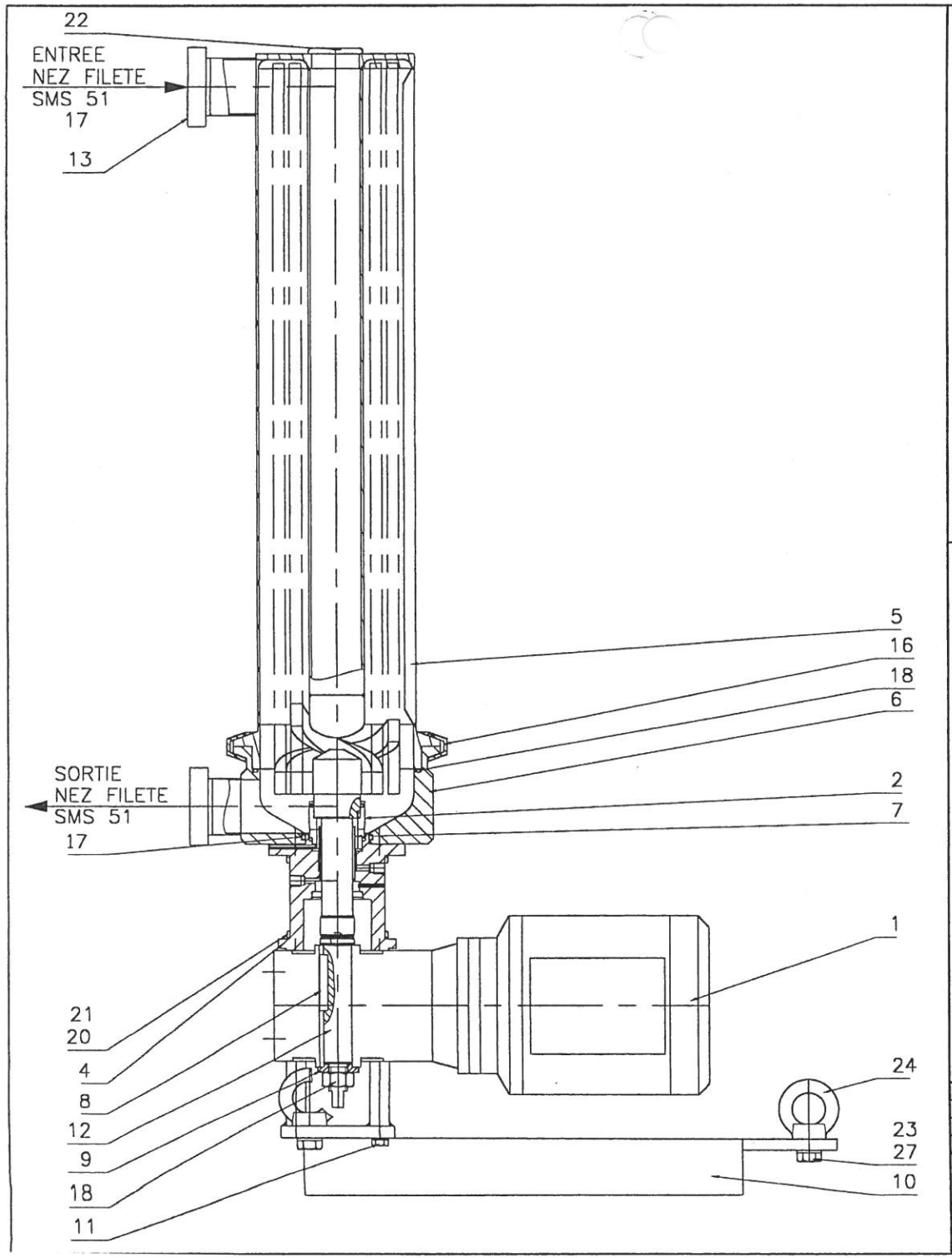

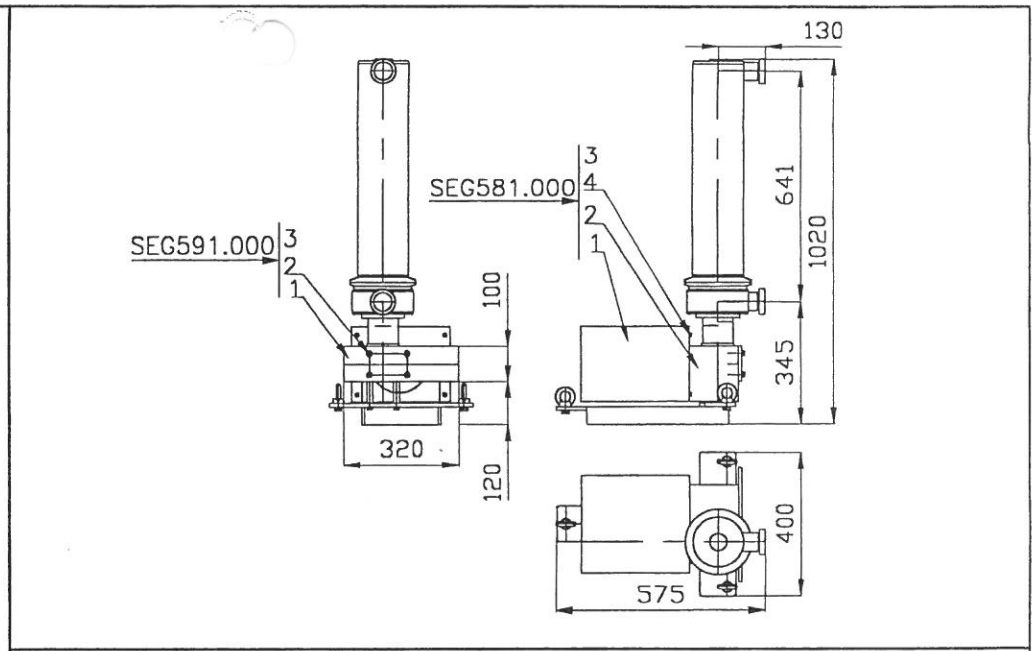

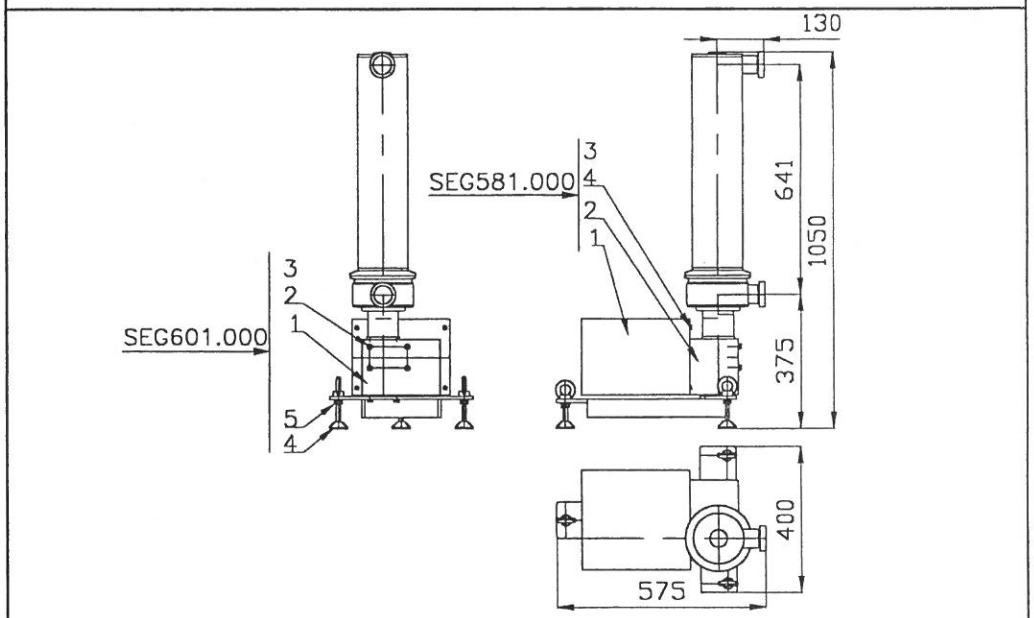

IND	DATE	NOM	MODIFICATION (NE PEUT ETRE FAIT QUE DANS FICHIER REFERENCE)

PCM DOSYS

DESIGNATION:
DOSYMIX DM2000
COMPLET

DATE:	DESSINE:	VERIFIE:	ECH:	O.F		A3	SEN462.020	00
07/1997	L.H	L.H						

PUMP MAINTENANCE RECOMMENDATION

General inspection:
Initial general inspection of the pumps must be carried out after three months. This inspection consists in complete disassembly of the pump and checking the condition of the wearing parts.
If no significant wear is observed during initial disassembly, the inspection periodicity may be increased by 500-hour sections but must not exceed the limits indicated in the following table.

Pump protection:
All maintenance operations shall be carried out with the machine at a stop and with the power sources cut off:
- Press the red "emergency shutdown" pushbutton to select the air inlet.
- Close the regulating filter valve.
- Turn off the machine general electric power supply by means of the isolating switch on the main control cabinet.
- Lock out the various protection devices (padlock on isolating switch)

Maintenance table:
This table applies to the operation of the pumps 24 hours a day and 5 days out of 7.

INSPECTIONS	Week or 110 h period	Month or 330 h period	3 months or 1000 h period	6 months or 2000 h period	12 months or 4000 h period
Pumped product leakage	X	X	X	X	X
Air leaks	X	X	X	X	X
Seal bearing on rotary valve stem			X	X	X
Pump liner and piston **			X	X	X
Conical seat and valve *			X	X	X
Pump piston seals			X	X	X

REPLACEMENTS	3 Month or 1000 h period	6 months or 2000 h	9 months or 3000 h period	12 months or 4000 h period	24 months or 8000 h period
Pump piston seals	X	X	X	X	
Anti-extrusion bushes	X	X	X	X	
Linear actuator seals					X
Seat and conical valve		X		X	
I/O fast coupling seals				X	
Conical valve stem seals	X	X	X	X	
Conical valve spring				X	
Exhaust silencer				X	
Rotary actuator seals					X
Damping washer				X	

* In the event of accidental scoring due to the entry of a hard object into the pump, replace the seat and valve.
** Deterioration is possible in the event of the unit operating without water at the hydraulic barriers.

Wallet containing emergency seals:

This wallet is supplied with the machine and contains:

- 1 PTFE damping washer
- 2 pump piston seals
- 4 anti-extrusion rings
- 2 fast coupling seals
- 1 set of valve stem seals
- 2 I/O high-speed coupling seals

DOSYS

Des pompes au process

DACC SPARE PARTS

Type : DACC 63/100-23
Date : 23/12/2003
Validity : 2 months
Delivery time : 6 weeks
Term payment : 100 % with swift transfer to delivery date.
Packing : include
Shipping : excluded

Description	Ref on plan	Spare parts Ref	N° on plan	Quantity for 1 pump	Annual Replacement Frequency	Unit price HT in €uro	Annual Total price HT in €uro
Wallet of spare parts including :		SEW146.000		1	4	Call our customer service n°0130465248	
- anti-extrusion ring	15	IB0100.095	SE0320.000	2	4		
- Gasket, seal	10	JAS250.SIL	SE0320.000	1	4		
- Gasket, seal	13	JAS270.SIL	SE0320.000	1	4		
- Gasket, seal	12	JAV160.186	SE0320.000	2	4		
- Gasket, seal	11	JD0010.NBA	SE0320.000	2	4		
- Gasket, seal	14	JF0010.160	SE0320.000	1	4		
- Gasket, seal	06	JAV360.186	SE1915.000	2	4		
- anti-extrusion ring	04	IB0050.095	SE1915.000	4	4		
- Gasket, seal	05	JBS030.SIL	SE1915.000	1	4		
Spring	09	RA0080.126	SE0320.000	1	1		
Seat	4	HJ0040.089	SE0320.000	1	1		
Ref Valve D23	3	GE0044.014	SE0320.000	1	1		
Sensor	17	DE0230.000	SE0320.000	2	1		
Bearing	07	BG0200.000	SE0320.000	1	1		
Screw jack gaskets kit (rep 25)		AZ0020.000	SE0320.000	1	1		

Electro-Thrust
Electric Cylinder

1604.011.04/UK
March, 2003 (corrected June 2003)

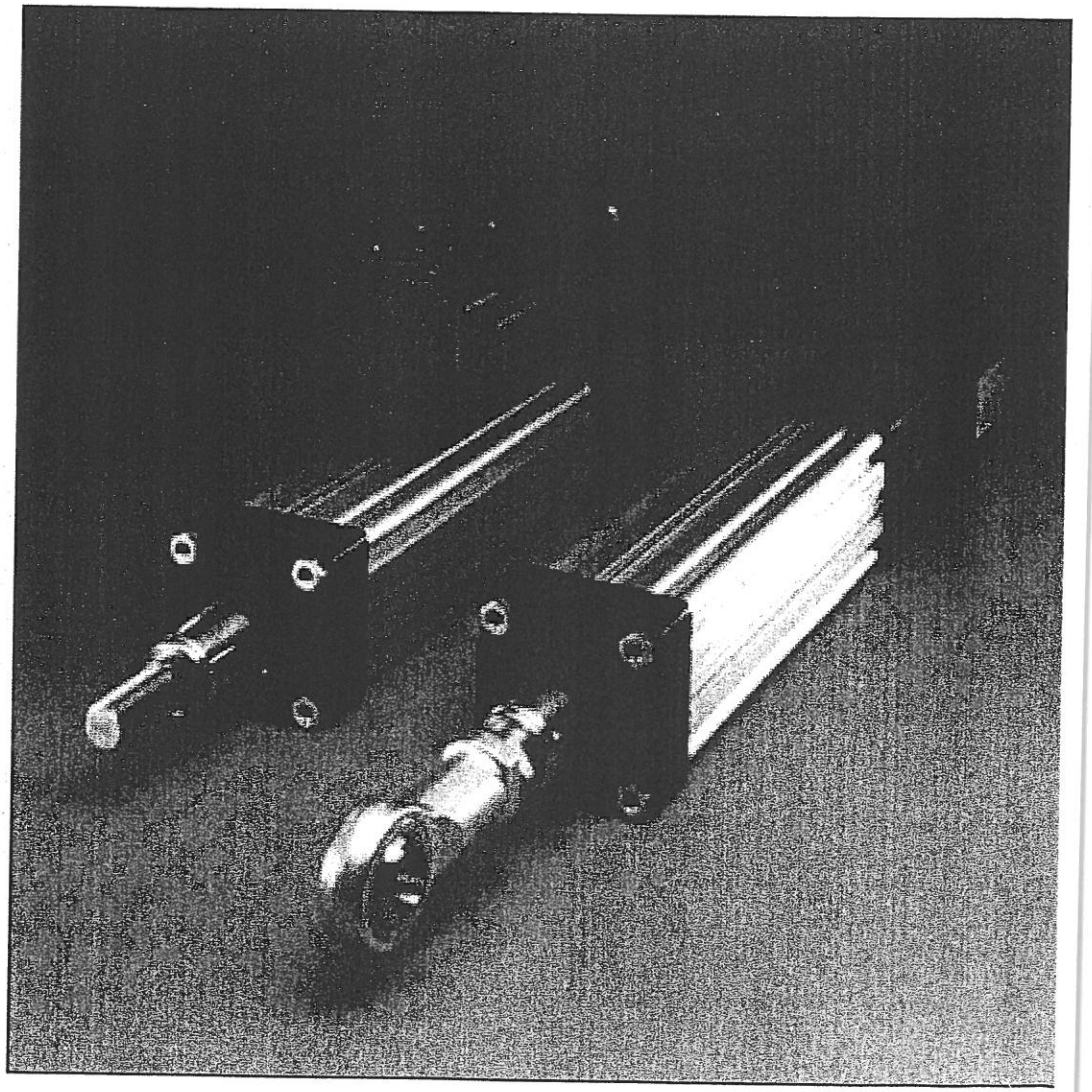

The Electro-Thrust Electric Cylinder

The Electro-Thrust electric cylinder offers an alternative to pneumatic and hydraulic systems in applications where the programmable functionality of electro-mechanical drives is required. Used in conjunction with the wide range of accessories, this device can perform a variety of functions in material handling and supply systems, machine tools, test rigs and laboratory equipment. Typical applications include handling operations in wood and plastics processing, vertical feeding axes in machine tools, tensioning and clamping fabrics in textile processing, component handling in automotive production and remote actuation of valves and regulators. IP65 rated versions are also available for the more rigourous applications,and are particularly suited to washdown, external and contaminated environments.

Features of the Electro-Thrust cylinder include:

- Stroke lengths up to 2400mm
- Ballscrew pitches from 5 to 50 mm/rev.
- Thrust forces in excess of 44,000N
- Typical repeatability ± 0.013mm
- Speeds up to 1 m/s
- Timing belt pulley drive (with parallel motor installation), available with 4 drive ratios
- High mechanical efficiency (up to 90%)
- 5 different frame sizes
- IP65 version avaliable

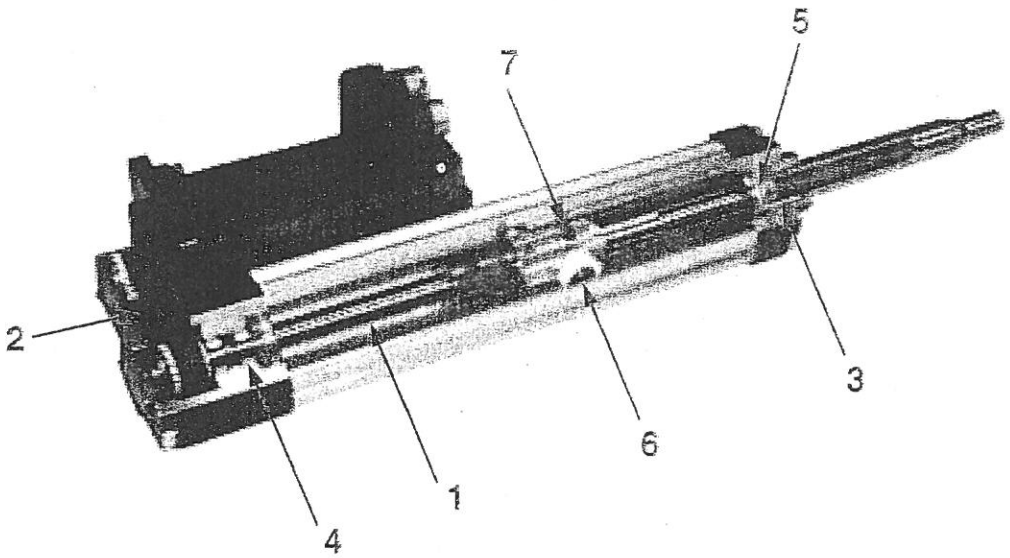

Ball screw (1)

The Electro-Thrust cylinder incorporates a high quality C7 class ball screw drive, giving smooth operation throughout the entire speed range. Life expectancy and efficiency are both high. Very short movements are possible due to the absence of stick-slip effects.

Timing belt transmission (2)

The slip-free, zero-maintenance timing belt transmission used in parallel drive versions offers high efficiency and smooth operation. Drive ratios up to 2:1 are available depending on the cylinder size; the ET32 is also available with a 1:1.5 step-up ratio.

Extra-long rod bearing (3)

The long cylinder rod bearing allows high side load forces to be applied with less bearing deflection. The bearing retains cylinder lubrication by means of gaskets which also prevent the ingress of external contamination.

Rear screw support bearing (4)

Angular contact bearings at the drive end are designed to accommodate high axial and radial forces. Generous dimensions ensure long screw and bearing life.

Front screw support bearing (5)

A polymer bearing supports the front end of the ball screw. This eliminates vibration and run-out, improving positioning accuracy and extending screw life

Precision anti-rotate mechanism (6)

Nylatron NS wheels virually eliminate rod end play and noise whilst rigidly supporting the drive screw for longer life and smoother operation.

Switch operating magnet (7)

The permanent magnet integrated in the screw nut serves to operate home and limit switches which can be fitted to a longitudinal groove in the cylinder body.

Parker Hannifin
Electromechanical Division
Offenburg, Poole, Milan

Features of the IP65-rated ET

- IP65 rating available on four sizes - 32, 50, 80 & 100
- Polyester/Polyurethane-coated cylinder body
- High performance dual piston rod seal
- Uses existing home & limit sensors
- All external fixings in stainless steel
- Optional stainless steel rod ends & cylinder mountings
- Parallel or in-line motor mounting options retained

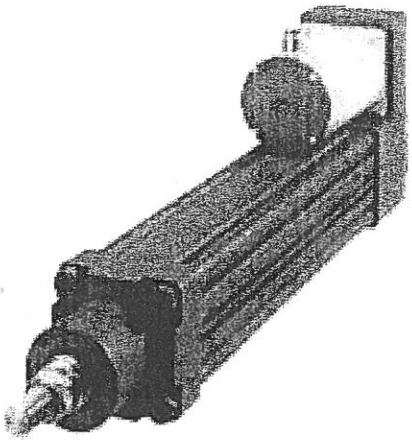

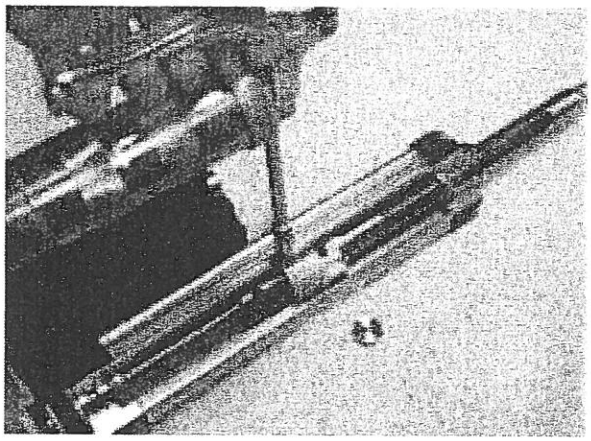

Relubrication

All sizes of ET Cylinder are now supplied with an access port for direct relubrication of the ballnut. The access port is located at the mid-point of the cylinder body extrusion on the same side as the limit switch groove. Access to the port can be ensured by selecting the appropriate cylinder body orientation.

Lubrication intervals are application-dependent and are typically every 1000 hours. Please refer to the user guide for details of the lubrication procedure and intervals.

Non-standard features

The following non-standard features are available on request - please ask for a quotation

C5 grade ballscrews
Custom-lead ballscrews
Air purge fittings
Oil baths to prolong life in high duty applications
Custom mountings and rod ends
Third party motor mounts
Preparation for aggressive environments

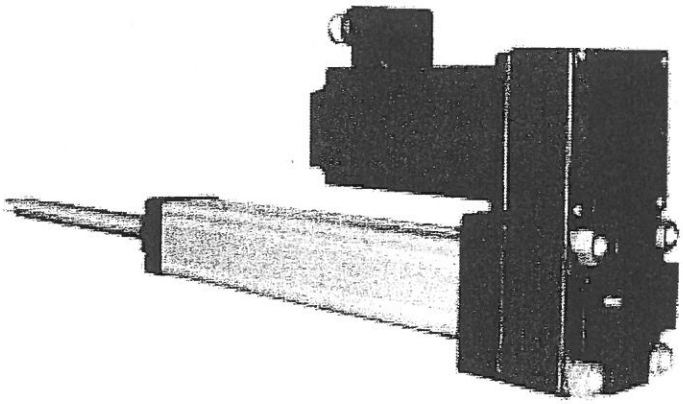

Parker Hannifin
Electromechanical Division
Offenburg, Poole, Milan

Electro-Thrust Electric Cylinder

Cylinder size	Units	ET32		ET50			ET80		
Screw type		M05	M10	M05	M10	M16	M05	M10	M25
Screw data									
Lead	mm	5	10	5	10	25	5	10	25
Diameter	mm	12		16			25		
Screw length									
Parallel drive	mm	174.7	174.7	200.3	203.1	207.1	227.0	245.5	252.4
Inline drive	mm	160.7	160.7	190.7	193.7	197.7	211.2	229.8	236.6
Stroke, speed and acceleration									
Available stroke①	mm	50-750mm		50-1000mm			100-1500mm		
Maximum permissible speed with stroke√									
50-300	mm/s	625	833	469	625	1000	300	600	1000
450	mm/s	448	833	469	625	1000	300	600	1000
600	mm/s	276	552	354	625	1000	300	600	1000
750	mm/s	187	374	241	480	766	300	600	1000
1000	mm/s	-	-	145	289	461	230	444	1000
1250	mm/s	-	-	-	-	-	153	297	735
1500	mm/s	-	-	-	-	-	109	213	527
1600	mm/s	-	-	-	-	-	-	-	-
1800	mm/s	-	-	-	-	-	-	-	-
2000	mm/s	-	-	-	-	-	-	-	-
2200	mm/s	-	-	-	-	-	-	-	-
2400	mm/s	-	-	-	-	-	-	-	-
Max. acceleration	mm/s^2	3	6	3	6	10	3	6	10
Forces									
Max. thrust force②	N	600		3300			8300		
Mass									
Mass(zero travel)	kg	1.3		2.3			6.8		
Mass per metre travel	kg	3		6			10		
Reflected shaft inertia									
Parallel drive (zero travel)	$kgcm^2$	0.042	0.044	0.554	0.576	0.605	1.289	1.353	1.428
Inline drive (zero travel)	$kgcm^2$	0.025	0.027	0.129	0.158	0.187	0.748	0.811	0.887
Per metre travel	$kgcm^2$	0.166	0.185	0.516	0.540	0.568	3.020	3.060	3.320
Precision									
Unidirectional repeatability③	mm	± 0.013							
System backlash⑤	mm	0.02							
Efficiency									
Ball screw	%	90							
Timing belt drive	%	90							

Quoted data does not include safety margins. For type designations, see system code, page18.
The data is valid for a temperature range of 0-60°C. Maximum permissible relative humidity: 90% non condensing.

① Safety stroke of 5-10mm should be added at either end of travel for the ET32 and ET50, and 15-25mm for the larger sizes and longer leads.

② Values refer to the maximum permissible screw bearing load. Please note life expectancy curve on page 7. In parallel drive, the maximum thrust force is limited by the timing belt (see page 6 'Allowable torque in parallel drive')

③ These values are under ideal conditions at low load and low speed. At maximum speed and load this can increase to ±0.07.

√ Consult factory for maximum speed if duty cycle exceeds 80%.

⑤ Inline motor mounting only

Parker Hannifin
Electromechanical Division
Offenburg, Poole, Milan

ET100			ET125			
M05	M10	M40	M05	M10	M20	M50
5	10	40	5	10	20	50
40			50			
332.2	352.0	416.1	359	392	385	412
309.4	329.2	393.2	400.5	433.5	426.5	453.5
100-1500mm			100-2000mm			
188	375	1000	150	240	400	1000
188	375	1000	150	240	400	1000
188	375	1000	150	240	400	1000
188	375	1000	150	240	400	1000
188	375	1000	150	240	400	1000
188	375	1000	150	240	400	1000
166	325	1000	150	240	400	1000
-	-	-	150	240	400	1000
-	-	-	144	240	400	1000
-	-	-	119	234	400	1000
-	-	-	100	196	390	954
-	-	-	85	167	333	814
3	6	10	3	6	10	10
21200			44500			
14.8			30			
20			37			
7.083	7.492	9.189	34.701	34.847	35.432	39.527
4.018	4.427	6.124	33.644	33.790	34.375	38.471
19.780	19.860	21.380	48.216	48.364	48.957	53.102
± 0.013			± 0.025			
0.02			0.075			
90			90			
90			90			

The 'P' in the part number applies to all parallel and/or reverse parallel motor positions; (also see page 18)

'A' means ratio i = 1:1;
'B' means ratio i = 1.5:1;
'D' means ratio i = 2:1;
'Z' means ratio i = 1:1.5

Torque/thrust factor and zero load torque

The table below displays the thrust generated for every 1Nm torque at the screw. The table takes account of efficiency, belt ratio and lead. The table is for general guidance only. The inertia of the screw must also be taken into consideration for a more precise dimensioning of the drive unit.

Cylinder	Thrust factor [N/Nm]	Zero load torque for motor [Nm]
ET32		
ET32-M05LA	1130	0.2
ET32-M05PA	1015	0.2
ET32-M05PZ	675	0.3
ET32-M10LA	565	0.2
ET32-M10PA	510	0.2
ET32-M10PZ	335	0.3
ET50		
ET50-M05LA	1130	0.3
ET50-M05PA	1015	0.3
ET50-M05PB	1525	0.2
ET50-M05PD	2035	0.15
ET50-M10LA	565	0.3
ET50-M10PA	510	0.3
ET50-M10PB	765	0.2
ET50-M10PD	1015	0.15
ET50-M16LA	353	0.3
ET50-M16PA	317	0.3
ET50-M16PB	476	0.3
ET50-M16PD	635	0.15
ET80		
ET80-M05LA	1130	0.5
ET80-M05PA	1015	0.6
ET80-M05PB	1525	0.4
ET80-M05PD	2035	0.3
ET80-M10LA	565	0.6
ET80-M10PA	510	0.7
ET80-M10PB	765	0.4
ET80-M10PD	1015	0.3
ET80-M25LA	225	0.9
ET80-M25PA	205	1.0
ET50-M25PB	305	0.7
ET80-M25PD	405	0.5
ET50		
ET100-M05LA	1130	0.5
ET100-M05PA	1015	0.6
ET100-M10LA	565	0.6
ET100-M10PA	510	0.7
ET100-M40LA	140	0.9
ET100-M40PA	126	1.0
ET125		
ET125-M05LA	1130	2.6
ET125-M05PA	1107	2.9
ET125-M10LA	565	3.0
ET125-M10PA	508	3.3
ET125-M20LA	238	3.4
ET125-M20PA	214	3.8
ET125-M50LA	113	3.8
ET125-M50PA	102	4.2

Parker Hannifin
Electromechanical Division
Offenburg, Poole, Milan

Allowable torque in parallel drive

		Motor type										Max. allowable motor torque [Nm] vs. speed								
		Step motor SY...			MD	Servo motor Flame size						Motor speed [rpm]								
Cyl.	ratio	56	87	107	34	55	70	92	115	142	190	100	500	1000	1500	2000	2500	3000	3500	5000
ET32	1:1	x				x						1.68	1.35	1.09	0.92	0.84	0.75	0.68	0.65	0.65
ET32	1:1.5	x				x						1.22	0.99	0.82	0.72	0.63	0.57	0.53	0.50	0.50
ET50	1:1	x										2.80	2.19	1.73	1.42	1.27	1.12	1.01	0.99	0.99
ET50	1.5:1	x					x					1.93	1.55	1.25	1.04	0.94	0.84	0.76	0.73	0.73
ET50	2:1	x										1.43	1.16	0.94	0.80	0.73	0.66	0.60	0.57	0.57
ET50	1:1		x		x		x	x				3.64	2.93	2.39	2.10	1.85	1.67	1.53	1.38	1.24
ET50	1.5:1		x									2.40	1.96	1.62	1.44	1.28	1.17	1.08	0.99	0.93
ET80	1:1		x									7.07	5.55	4.39	3.77	3.22	2.84	2.52	2.20	2.06
ET80	1.5:1		x									5.08	4.04	3.25	2.83	2.46	2.21	2.00	1.78	1.56
ET80	2:1		x									3.64	2.93	2.39	2.10	1.85	1.67	1.53	1.38	1.24
ET80	1:1			x	x			x	x			13.4	10.6	8.43	7.16	6.11	5.40	4.79	4.18	3.92
ET80	1.5:1			x	x			x	x			9.66	7.69	6.18	5.38	4.68	4.19	3.79	3.38	2.96
ET80	2:1				x			x				6.91	5.57	4.54	4.01	3.51	3.18	2.91	2.65	2.35
ET100	1:1								x	x		61.2	37.1	32.6	30.4	28.5	27.6	25.9	24.8	22.3
ET125	1.1									x	x	91.0	91.0	77.0	72.0	71.0	-	-	-	-

The table shows the maximum torques which can be transmitted by the timing belt. Please note the maximum thrust force (see Technical Data page). For conversion purposes, use the torque/thrust table on page 5.

Service Life

The service life of ET Cylinders is based upon the L10 life of the ballscrew and thrust bearings. This is determined by metal fatigue and hence is difficult to predict. It is suggested (in accordance with the ISO definition) that 90% of identical ballscrews/bearings working under the same conditions will achieve or exceed this life.

The mean load for varying loads at varying speeds is calculated using the following formula:-

$$F_m = \sqrt[3]{\frac{F_1^3 n_1 q_1 + F_2^3 n_2 q_2 + F_3^3 n_3 q_3 + F_x^3 n_x q_x \ldots}{n_m}}$$

Where the mean speed is calculated

$$n_m = n_1 q_1 + n_2 q_2 + n_3 q_3 + n_x q_x$$

The mean load for varying loads at constant speed is given by

$$F_m = \sqrt[3]{F_1^3 q_1 + F_2^3 q_2 + F_3^3 q_3 + F_x^3 q_x}$$

F_m = mean load [N]

n_m = mean speed [rpm]

$F_{1.2.3}$ = individual forces [N]

$n_{1.2.3}$ = speeds at which an individual force F_1, F_2 or F_3 is applied [rpm]

$q_{1.2.3}$ = time percentage of the overall cycle when an individual force F_1, F_2 or F_3 is applied [%]

Parker Hannifin
Electromechanical Division
Offenburg, Poole, Milan

The diagrams show the travel distance achieved or exceeded by 90% of a number of identical or similar screws and their bearings before they fail due to material fatigue. The front screw support and the timing belt for parallel drive are not included.

ET32

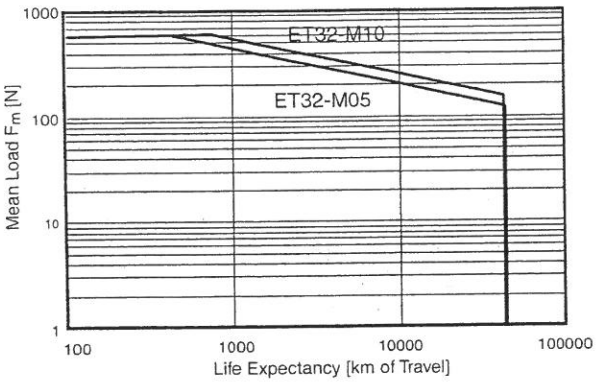

ET50

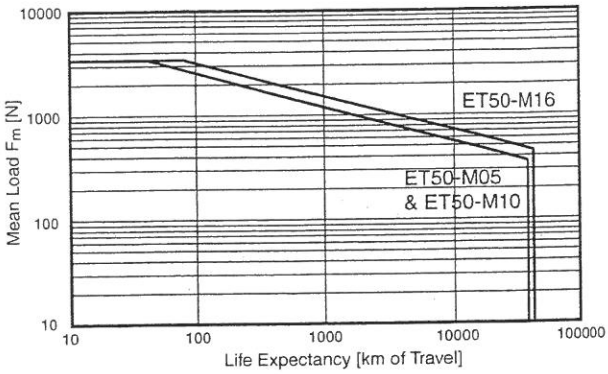

ET80

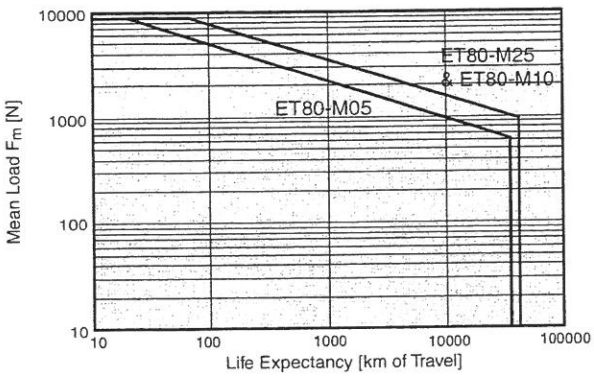

ET100

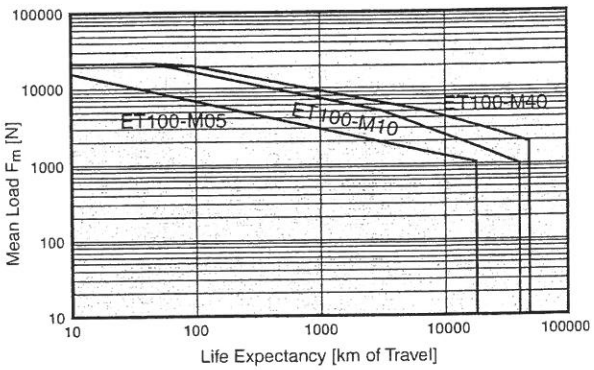

ET125

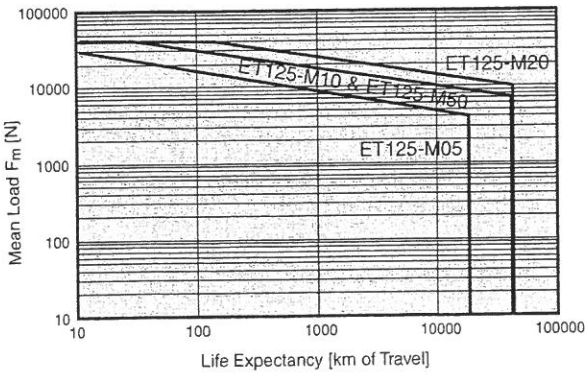

Parker Hannifin
Electromechanical Division
Offenburg, Poole, Milan

Electro-Thrust Electric Cylinder

The Electro-Thrust electric cylinder has a generously dimensioned front bearing which supports the rod in conjunction with three roller bearing-mounted plastic rollers. This system enables the cylinder to accommodate a certain amount of side load. Please note the side load capacity increases with the stroke length because of the greater separation between the bearings. To reach the required load values during a given application, it is sometimes useful to select a cylinder with greater stroke than is required for the application. Example: an ET50 with a 200mm stroke can accommodate approximately 72N of side load when fully extended. An ET50 with a 300mm stroke can accommodate approx. 166 N of load when it is only extended by 200 mm. If your application requires an even greater load capacity, then the cylinder can be fitted with the linear rod guide module which is available as an option (not available on ET125).

⚠ The curves specified here only apply to body orientation O and B if side load is applied from above or below. In body orientation C and A, the rod end load capacity is halved.

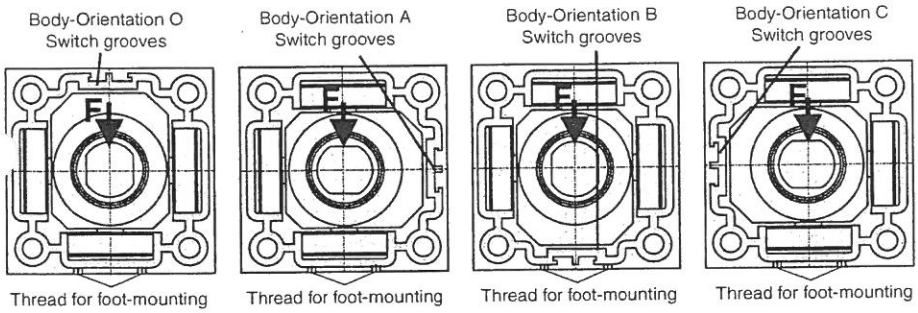

In body orientation O or B, the side load is carried by two rollers. In orientations A and C, the load is carried by only one roller.

If side load F is not applied from above or below as shown in the diagram, but from the right or the left, then the reverse of the above applies.

The ET100 and ET125 are fitted with switch grooves on all sides.

Permissible side load ET32

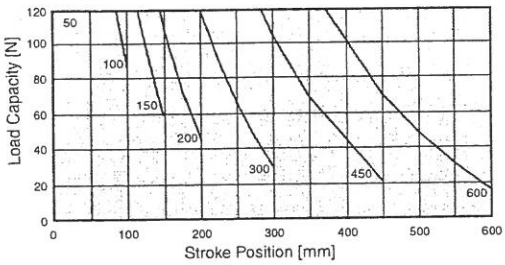

Permissible side load ET50

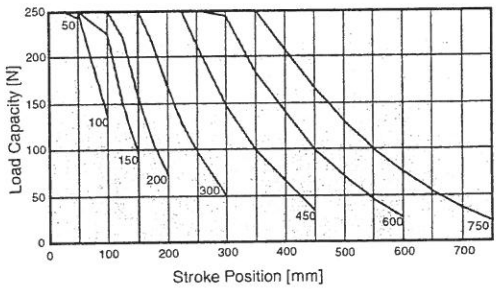

Permissible side load ET80

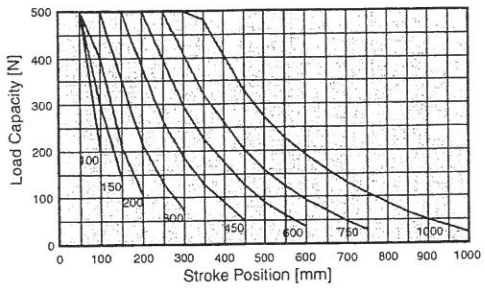

Permissible side load ET100

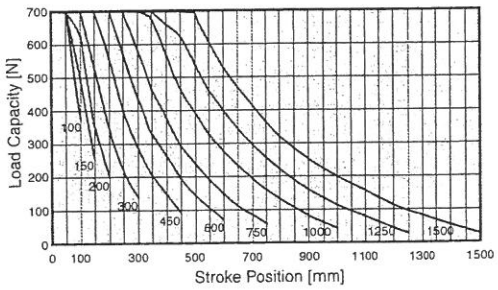

Permissible side load ET125

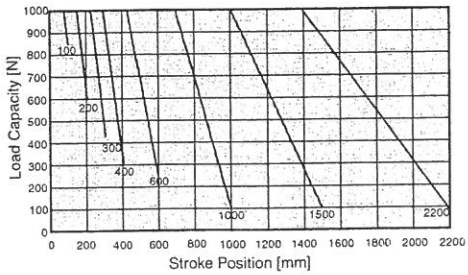

Parker Hannifin
Electromechanical Division
Offenburg, Poole, Milan

Home & Limit Switches

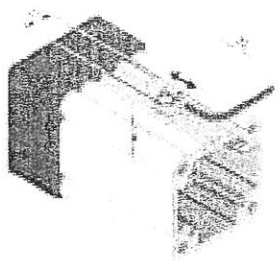

All standard Electro-Thrust electric cylinders are equipped with a permanent magnet which is integrated in one of the screw nuts. The cylinder body features two T-grooves on one side (on each side with the ET100) for fitting limit & home sensors. These can be positioned freely along the entire length of the casing. Two different types of switch are available for the ET cylinder range:

Hall effect sensor

- N.C. or N.O.
- electronic
- LED display
- moderate cost
- long life expectancy

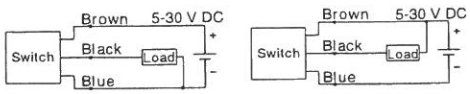

Reed contact

- N.C.
- mechanical
- LED display
- low cost
- moderate life expectancy

Hall Effect Sensor								
Type	Function	LED colour	Logic	Cable	Switch current	Supply current	Voltage supply	Operating frequency
SMH-1P*	N.O.	Green	PNP	1.5m	max. 150mA	7mA at 12VDC 14mA at 24VDC	5-30 V DC	max. 500 Hz
SMH-1N*	N.O.	Red	NPN					
SMC-1P*	N.C.	Yellow	PNP					
SMC-1N*	N.C.	White/Red	NPN					

* Add "C" to part number for 150mm cable with connector in place of 1.5m cable, e.g. SMH-1PC

Reed Contact									
Type	Function	LED colour	Cable	Switch Current		Nominal power rating		Voltage supply	Operating frequency
				ohmic load	ind. load	ohmic load	ind. load		
SMR-1	N.O.	Green	1.5m	30-300 mA	30-100 mA	AC/DC 10W	AC/DC 5W		300Hz
SMR-1L	N.O.	Red	1.5m	5-40 mA	5-25 mA	AC/DC 10W	AC/DC 5W	5-30VDC	300Hz
SMD-1L	N.C.	Yellow	1.5m	5-25m	5-25mA	AC/DC 3W			200HZ

Only use SMC-1P with COMPAX. With PDX drives, use SMH-1N as the home switch and 2x SMC-1N as the limit switches. Limit switch attachement and possible limit switch cylinder combinations: see page 15.

Total Stroke

The total stroke to be given in the system code is calculated as follows:

Total stroke = Travel + S1+S2+S3 (application-dependent)

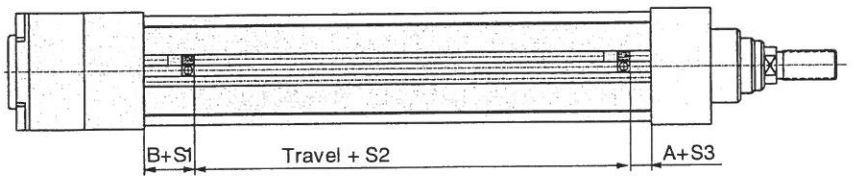

S1, S3: Stopping distance after limit.

S2: Difference between software limit range and hardware limit range.

Limit switch positions

Limit switch ▶ Cylinder ▼	SMH-1P		SMH-1N		SMC-1P		SMC-1N	
	A±1**	B±1**	A±1**	B±1**	A±1**	B±1**	A±1**	B±1**
ET32	0*	0*	0*	0*	10.0	78.0	0*	0*
ET50-M05	5	89	4	90	16	85	5	90
ET50-M10	5	92	4	94	16	88	5	94
ET50-M16	5	96	4	98	16	92	5	98
ET80-M05	11	73	10	74	22	69	11	74
ET80-M10	11	89	10	90	22	85	11	90
ET80-M25	11	98	10	99	22	94	11	99
ET100-M05	0*	0*	0*	0*	9.5	126	0*	0*
ET100-M10	0*	0*	0*	0*	9.5	146	0*	0*
ET100-M40	0*	0*	0*	0*	9.5	174	0*	0*

* Ensure that there is an additional stroke of 3mm if these switches are used.

** Approximate values only, set up during commissioning.

Parker Hannifin
Electromechanical Division
Offenburg, Poole, Milan

Linear rod guide module

The linear rod guide module has the following functions:

- Resists rotation at higher levels of torque
- Accommodates high levels of side load
- Relieves the cylinder of side load

The high levels of stability and precision are achieved by two hardened steel guide rods which operate in conjunction with four linear roller bearings. (Not available with ET125)

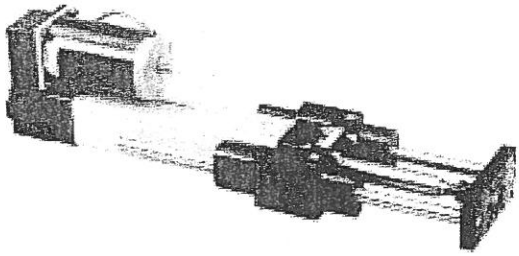

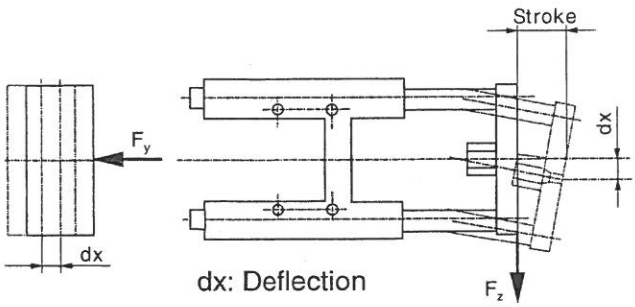

Diagrams apply to F_z or F_y

Permissible torque

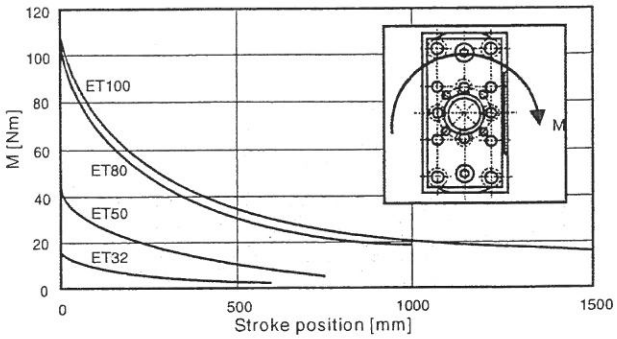

Load capacity for cylinder fitted with linear rod guide module

ET32 with linear rod guide module

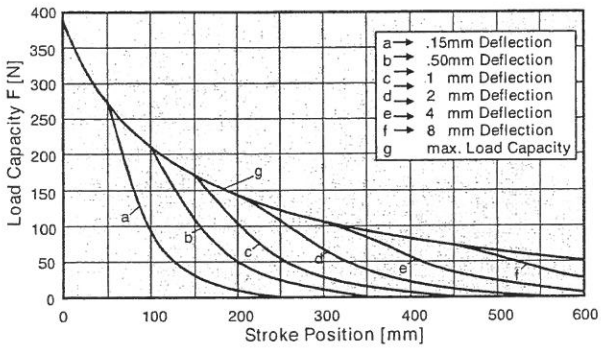

ET50 with linear rod guide module

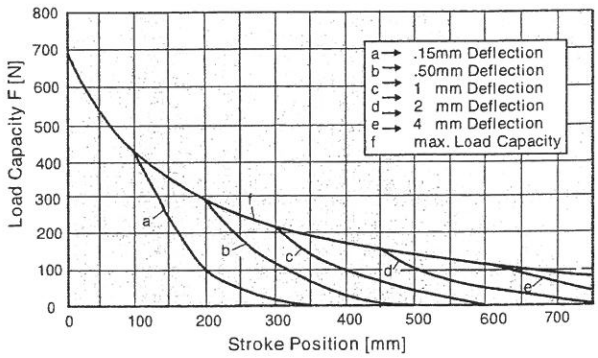

ET80 with linear rod guide module

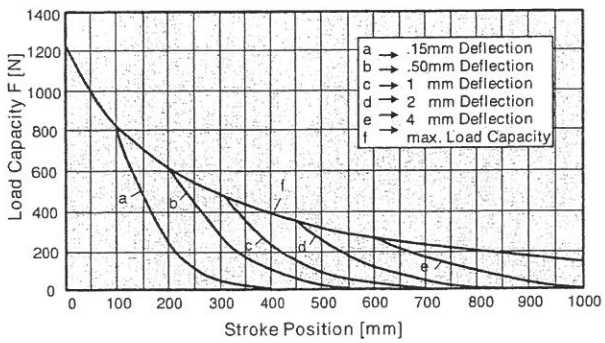

ET100 with linear rod guide module

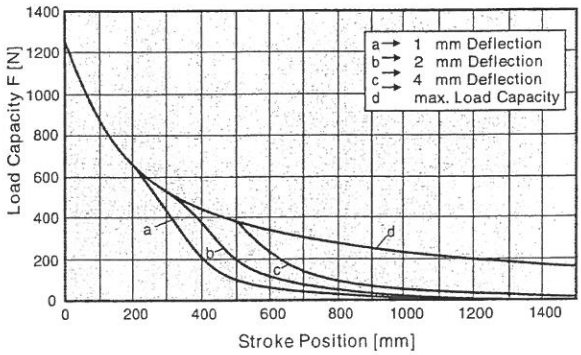

Parker Hannifin
Electromechanical Division
Offenburg, Poole, Milan

Dimensions of linear rod guide module

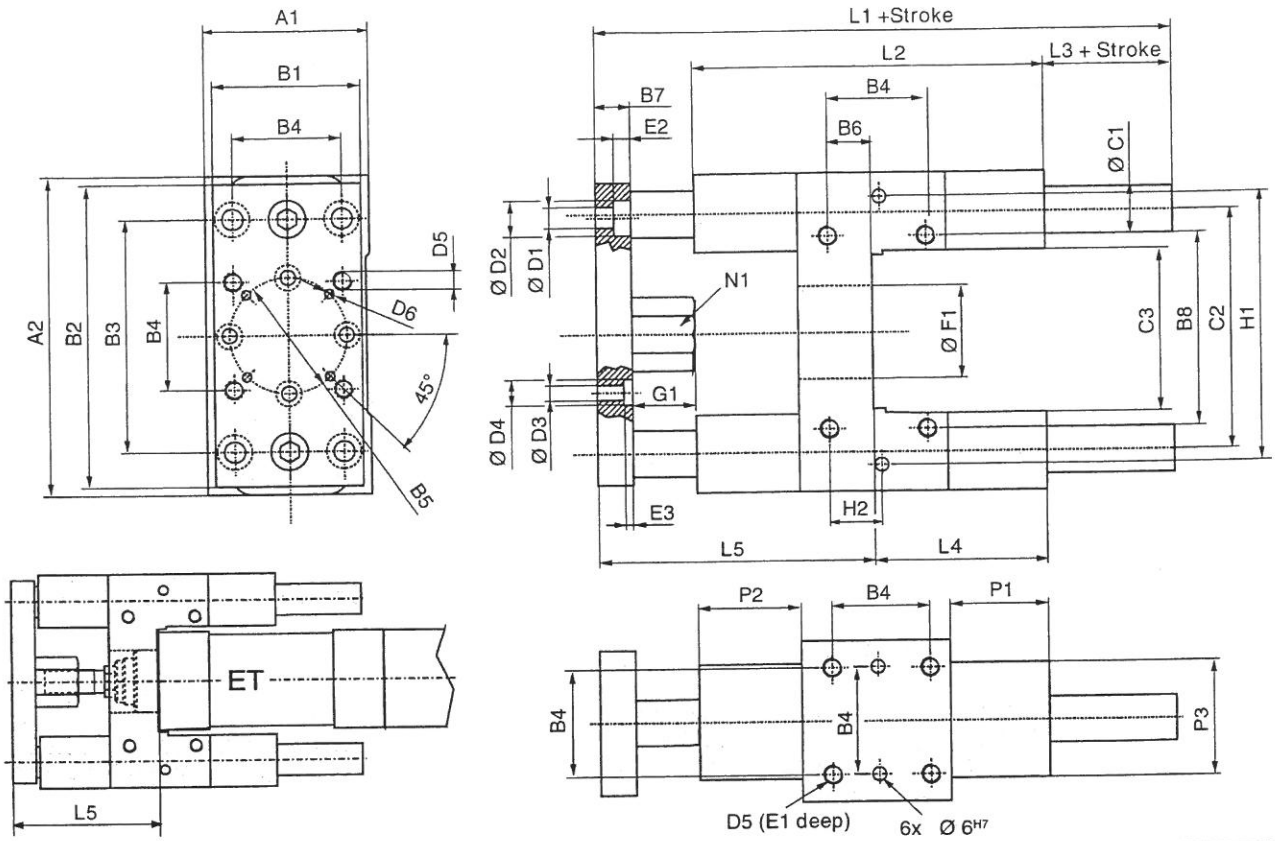

	A1	A2	B1	B2	B3	B4	øB5	B6	B7	B8	øC1	C2	C3	øD1	øD2	øD3	øD4	øD5	øD6	E1
ET32	50	97	45	90	78	32.5	31.5	4	12	61	12	73.5	50	6.6	11	5.2	9	M6	4	12
ET 50	70	137	63	130	100	46.5	50	19	15	85	20	103.5	70	9	14	6.4	11	M8	4	16
ET 80	105	189	100	180	130	72	76	21	20	130	25	147	105	11	17	8.4	14	M10	6	20
ET 100	130	213	120	200	150	89	76	24.5	20	150	25	171.5	130	11	17	8.4	14	M10	6	20

	E2	E3	øF1	G1	H1	H2	L1	L2	L3	L4	L5	N1	P1	P2	P3	Mass	Additional mass /100mm stroke
ET32	7	4	30	17	81	16	150	120	15	71	64	17	36	31	40	970g	175g
ET 50	9	9	40	27	119	23	192	150	24	79	89	24	42	44	50	2560g	495g
ET 80	11	5	50	32	166	36	247	200	24	113	110	30	50	52	70	6530g	770g
ET 100	11	5	55	55	190	45	290	220	24	128	138	30	49	51	70	8760g	770g

Linear Alignment Couplers (please order separately)

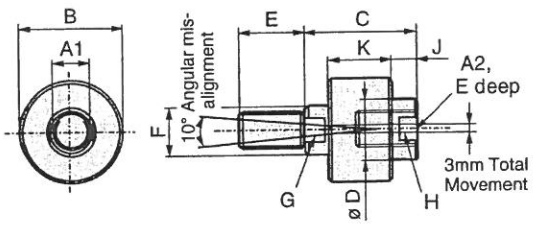

For mounting at rod end

- Compensates for alignment errors
- Increases mounting tolerance
- Simplifies cylinder attachment
- Increases life expectancy of cylinder guides
- Compensates for lateral offset between components and relieves guides of side load
- Withdrawal and thrust capability remains intact

Cylinder	Type	A1	A2	B	C	øD	E	F	G	H	J	K
ET32	LC32-1010	M10x1.25	M10x1.25	40	51	19	19	16	13	16	13	26
ET50	LC50-1616	M16x1.5	M16x1.5	54	59	32	29	25	22	29	14	33
ET80	LC80-2020	M20x1.5	M20x1.5	54	59	32	29	25	22	29	14	33
ET100	LC100-2727	M27x2	M27x2	89	102	51	51	38	32	43	19	64
ET125	LC125-3636	M36x2	M36x2	102	112	57	57		38		22	70

Parker Hannifin
Electromechanical Division
Offenburg, Poole, Milan

Electro-Thrust electric cylinder with inline drive

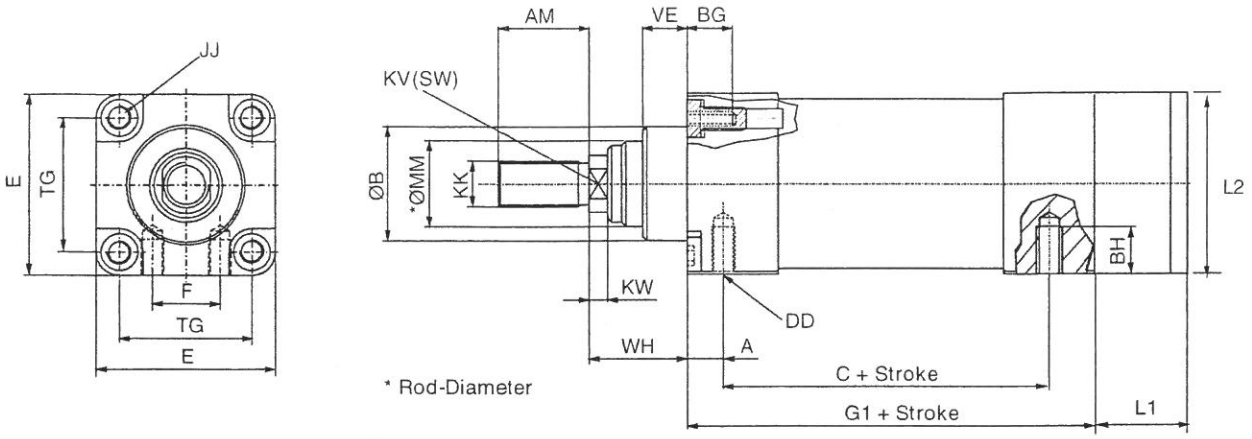

General dimensioning of the ET cylinder

Cylinder	A	AM	BG	BH	DD	E	F	JJ
ET32	14	22	14.5	9	M6 x 1.0	46.5	16	M6 x 1.0
ET50	16	32	16	12.7	M8 x 1.25	63.5	24	M8 x 1.25
ET80	21	40	16	17.5	M10 x 1.5	95.3	30	M10 x 1.5
ET100	27.5	54	16	24	M12 x 1.75	114	50	M10 x 1.5
ET125	37	72	11	24	M16 x 2.0	139.5	64	M12 x 1.75

Cylinder	KK	KV	ØMM	TG	KW	N1	FB	VD	ØBB
ET32	M10 x 1.25	10	18	32.5	5	106.4	37	4	30
ET50	M16 X 1.5	17	25	46.5	6.5	139.4	39	4	40
ET80	M20 X 1.5	22	35	72	10	191.3	57	5	45
ET100	M27 X 2.0	27	50	89	13	254	79	4	55
ET125	M36 x 2.0	41	70	110	13	334.5	127.1	7	60

Standard Cylinder

Cylinder	VE	WH	ØB
ET32	13	26	30
ET50	16	37	40
ET80	20	46	50
ET100	20	51	65
ET125	25.4	73	90

IP65 Variant

Cylinder	VE	WH	ØB
ET32	40	50	46
ET50	43	64	62
ET80	55	81	68
ET100	60	91	89
ET125	n/a	n/a	n/a

		Standard Cylinder			IP65 Variant		
		C	G1	G2	C	G1	G2
ET32	M05	112.5	140.5	176.7	115.7	143.7	179.9
	M10	112.5	140.5	176.7	115.7	143.7	179.9
ET50	M05	128.4	160.4	199.5	131.6	163.6	202.7
	M10	131.4	163.4	202.5	134.6	166.6	205.7
	M16	135.4	167.4	206.5	138.6	170.6	209.7
ET80	M05	129.5	173.0	228.3	132.7	176.2	231.5
	M10	148.1	191.6	246.9	151.3	194.8	250.1
	M15	154.9	198.4	253.7	158.1	201.6	256.9
ET100	M05	201.5	259.7	335.5	204.7	262.9	338.7
	M10	221.3	279.5	355.3	224.5	282.7	358.5
	M40	249.4	307.6	383.4	252.6	310.8	386.6
ET125	M05	207.0	278.5	405.6	n/a	n/a	n/a
	M10	240.0	311.5	438.6	n/a	n/a	n/a
	M20	233.0	304.5	431.6	n/a	n/a	n/a
	M50	260.0	331.5	458.6	n/a	n/a	n/a

Parker Hannifin
Electromechanical Division
Offenburg, Poole, Milan

Electro-Thrust electric cylinder with parallel drive

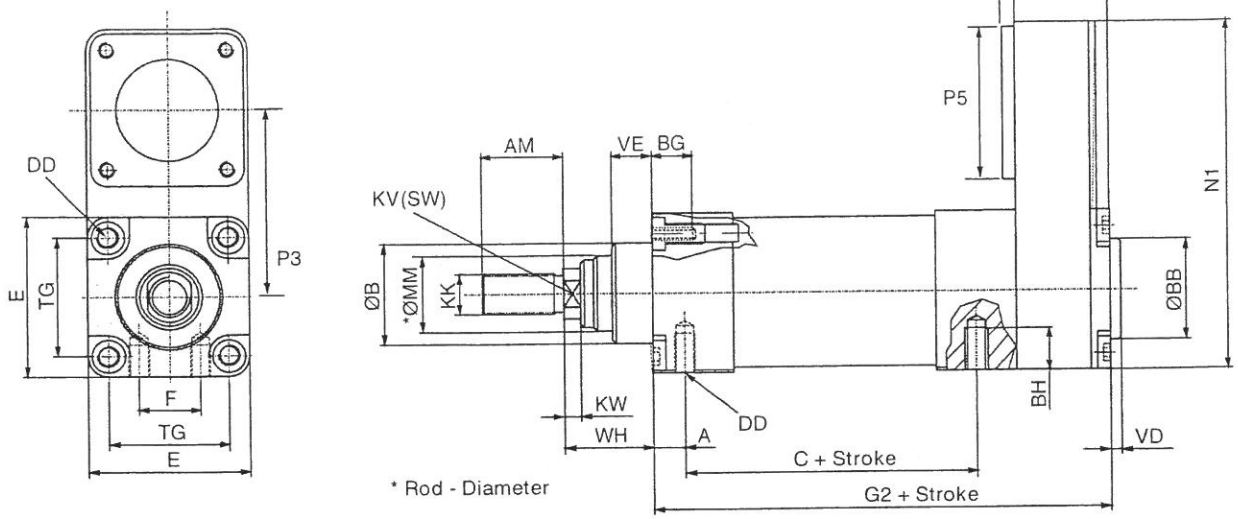

Cylinder	Motor Mount	Code	L1	L2	P3	P4	P5
ETS32	SY56, prepared only	20	44.25	57.15	54.0	5.75	57.15
ETB32	SM23, prepared only	20	61.10	57.15	54.0	5.75	57.15
	HDY55 (or equivalent SMH/SMB)	47	49.80	57.15	54.0	5.75	57.15
ETS50	SY56, prepared only	20	53.50	63.50	75.0	5.75	57.15
	SY83, prepared only	30	68.25	82.55	52.5	7.75	82.55
ETB50	SM23, prepared only	20	66.50	63.50	75.0	5.75	57.15
	BE34, prepared only	30	68.25	82.55	82.5	7.75	82.55
	MD3450/3475-14 prepared only	37	68.25	82.55	82.5	7.75	82.55
	HDY70 (or equivalent SMH/SMB)	57	59.00	69.80	82.5	8.74	76.20
	HDY92 (or equivalent SMH/SMB)	67	65.60	95.25	82.5	8.56	95.25
	Neugart PLE60	N6	69.50	90.00	82.5	2.00	72.15
ETS80	SY83, prepared only	30	79.50	95.25	95.0	7.75	86.36
	SY107, prepared only	40	89.26	107.95	105.0	7.75	107.95
ETB80	BE34, prepared only	30	87.50	95.00	95.0	7.75	86.36
	MD3450/3475-14 prepared only	37	87.50	95.00	95.0	7.75	86.36
	HDY92 (or equivalent SMH/SMB)	67	85.75	95.25	95.0	10.75	95.25
	HDY115 (or equivalent SMH/SMB)	77	99.00	107.95	107.5	10.00	107.95
	HJ96 (or equivalent SMH/SMB)	J4	95.75	95.00	97.5	10.75	95.25
	Stober P4, prepared only	P4	111.50	95.00	105.0	31.00	80.00
	Neugart PLE60	N6	89.50	80.00	95.0	10.00	80.00
	Neugaret PLE80	N8	94.50	80.00	95.0	10.00	80.00
ETB100	HDY115 (or equivalent SMH/SMB)	77	107.50	107.95	140.0	11.50	107.95
	HDY142 (or equivalent SMH/SMB)	87	115.34	142.87	140.0	20.00	142.88
	HJ116 (or equivalent SMH/SMB)	J5	114.50	114.30	140.0	17.00	114.30
	HJ155 (or equivalent SMH/SMB)	J6	128.25	152.40	140.0	20.00	142.88
	Stober P5, prepared only	P5	158.00	120.65	140.0	40.00	114.00
ETB125	HJ155 (or equivalent SMH/SMB)	J6	155.00	140.00	184.0	28.50	155.00
	HJ190 (or equivalent SMH/SMB)	J7	185.00	190.00	184.0	28.50	190.00
	Stober P5, prepared only	P5	182.00	140.00	184.0	35.00	140.00
	Stober P7, prepared only	P7	200.00	140.00	184.00	48.00	144.00

Parker Hannifin
Electromechanical Division
Offenburg, Poole, Milan

Cylinder mounting and rod-end options

Parker offers a range of rod-end accessories and mounting attachments to simplify the task of tailoring the ET cylinder to suit individual applications. Rod ends may be supplied with either male or female threads, the male version being required when either a spherical rod eye or rod clevis attachment is used. Cylinder mounting options include front and rear foot mountings, side lug mountings and flanges. Centre trunnion and rear eye or clevis mountings allow the cylinder to pivot about a transverse axis. Certain mounting and rod-end options can be supplied in stainless steel and may therefore be used in conjunction with the IP65-rated variant - please consult Parker for details.

Male Rod End

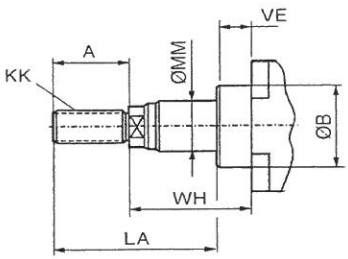

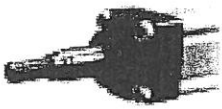

Female Rod End

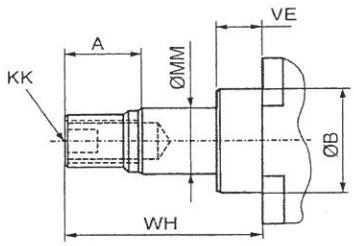

Male Rod End

					Standard Cylinder			IP65 Variant		
Cylinder	A	KK	LA	ØMM	ØB	WH	VE	ØB	WH	VE
ET32	22	M10 x 1.25	48	18	30	26	13	46	50	40
ET50	22	M16 x 1.5	69	25	40	37	16	62	64	43
ET80	40	M20 x 1.5	86	35	50	46	20	68	81	55
ET100	40	M27 x 2.0	85	50	65	51	20	89	91	60
ET125	71.5	M36 x 2.0	119	70	90	73	25.4	n/a	n/a	n/a

Female Rod End

				Standard Cylinder			IP65 Variant		
Cylinder	A	KK	ØMM	ØB	WH	VE	ØB	WH	VE
ET32	15	M10 x 1.25	18	30	32	13	46	56	40
ET50	25	M16 x 1.5	25	40	50	16	62	77	43
ET80	30	M20 x 1.5	35	50	59	20	68	94	55
ET100	40	M27 x 2.0	50	65	73	20	89	113	60
ET125	50.2	M36 x 2.0	70	90	104.5	25.4	n/a	n/a	n/a

Parker Hannifin
Electromechanical Division
Offenburg, Poole, Milan

Spherical Rod Eye

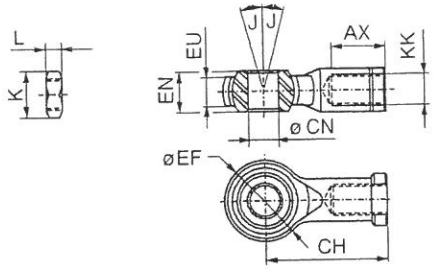

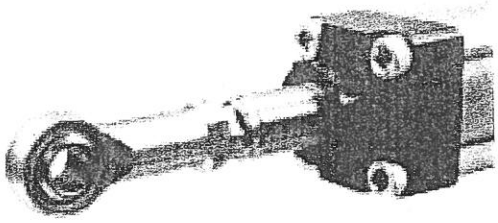

Cylinder	ØCN	EN*	KK*	EU	AX	CH*	ØEF	J	K	L
ET32	10	14	M10 x 1.25	10.5	20	43	29	13	17	6
ET50	16	21	M16 x 1.5	15	28	64	42	15	24	8
ET80	20	25	M20 x 1.5	18	33	77	50	14	30	9
ET100	30	37	M27 x 2.0	25	51	110	70	15	41	12
ET125	35	28	M36 x 2.0	43	56	125	80	15	55	14

*According to ISO tolerance calss d11

Rod Clevis

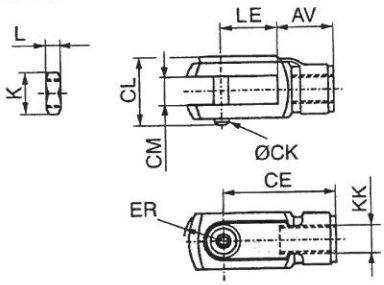

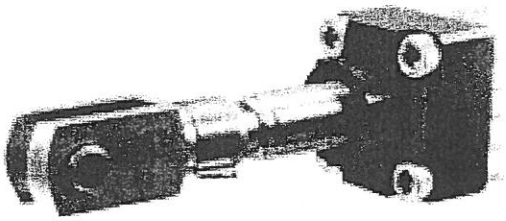

Cylinder	CL	CM	KK	LE	CE	AV	ER	ØCK*	K	L
ET32	26	$10.2^{+0.13}_{-0.05}$	M10 x 1.25	20	40	20	14	10	17	6
ET50	39	$16.2^{+0.13}_{-0.05}$	M16 x 1.5	32	64	32	22	16	24	8
ET80	52.5	$20.1^{+0.02}_{-0.05}$	M20 x 1.5	40	80	40	30	20	30	9
ET100	72	$30.0^{+0.6}_{-0.02}$	M27 x 2.0	54	110	56	35	30	41	12
ET125	83	35	M36 x 2.0	72	144	72	57	35	55	14

* +0.0/-0.1

Centre Trunnion Mounting

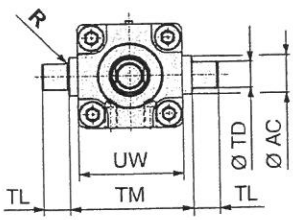

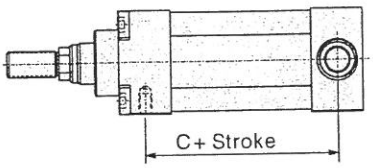

Cylinder	UW	ØTD	R	TL*	TM**	ØAC
ET32	46.5	12	0.8	12	50	18
ET50	63.5	16	0.8	16	75	25
ET80	95.3	20	0.8	20	110	30
ET100	114.3	25	1.6	25	132	40
ET125	139.5	31.95	1.6	32	149.5	45

* According to ISO tolerance d11 ** According to ISO tolerance h14

See table on page 12 for dimensions of C, G and G2

Parker Hannifin
Electromechanical Division
Offenburg, Poole, Milan

Foot Mounting (only for parallel or reverse parallel drive)

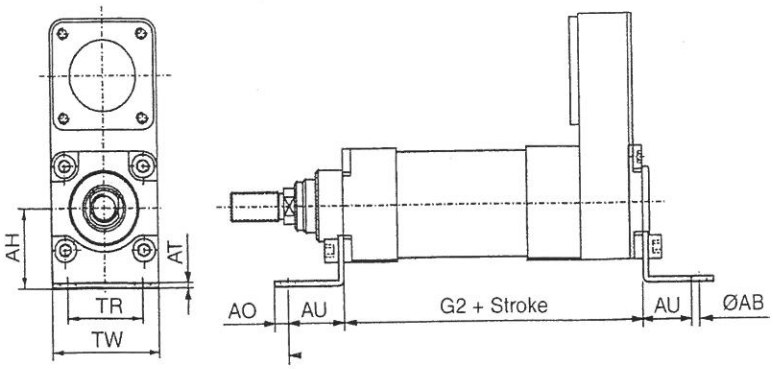

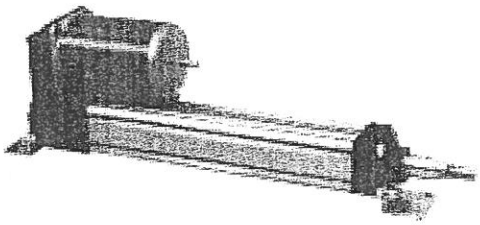

Cylinder	AH	AT	TR	ØAB*	AO*	AU	TW
ET32	32	3	32	7	7.2	24	46.5
ET50	45	3	45	9	9.5	32	64
ET80	63	4	63	12	16.5	41	96
ET100	71	6.5	75	14	19	41	115
ET125	90	8.25	90	14	22	45	140

* According to ISO tolerance d11

Installation Flanges

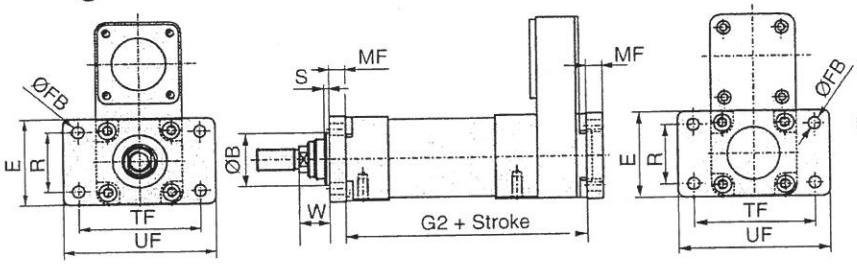

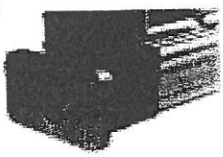

Cylinder	UF**	E	TF**	ØFB*	R	W	MF	ØB*	S
ET32	80	47	64	7.1	32	16	10	30	3
ET50	113	65	90	9	45	25	12	40	4
ET80	153	97	126	12.1	63	30	16	50	4
ET100	186	115	150	14.1	75	35	16	65	4
ET125	205	140	180	17	90	53	20	90	5.4

* According to ISO tolerance d11 ** According to ISO tolerance h14

Side Lug Mountings

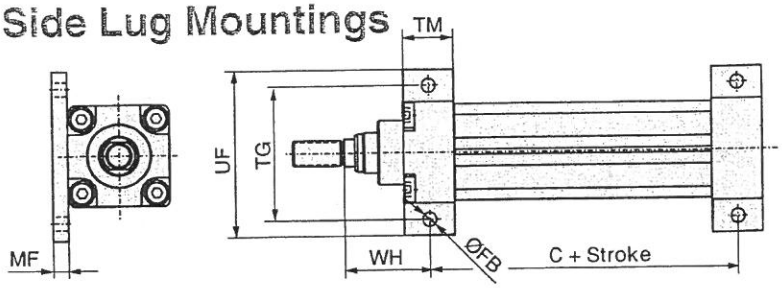

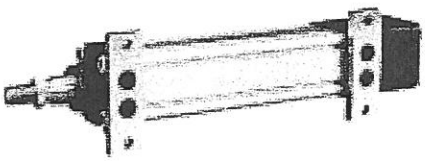

Cylinder	TG	UF	ØFB	TM	MF	WH
ET32	62	78	6.7	25.4	8	40
ET50	84	104	8.7	31.8	10	53
ET80	120	144	11	31.8	12	67
ET100	150	185	12.8	57.2	12	78
ET125	210	175	17	70	20	110

See table on page 12 for dimensions of C, G and G2

Parker Hannifin
Electromechanical Division
Offenburg, Poole, Milan

Rear Clevis (only for parallel or reverse parallel drive)

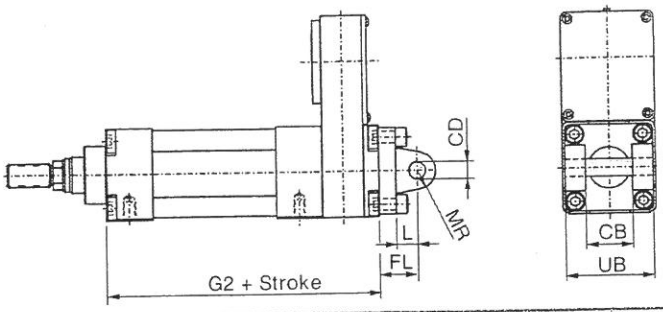

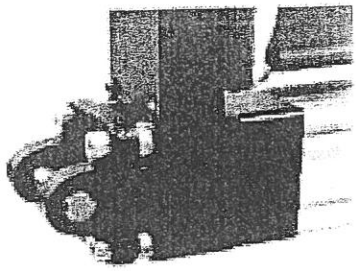

Cylinder	UB	CB	ØCD	MR	L	FL
ET32	44.7	26	10	10	12	22
ET50	59.6	32	12	13	15	27
ET80	89.7	50	16	20	20	36
ET100	109.5	60	20	22	25	41
ET125	130	70	25	25	32	50

Hinge Bracket

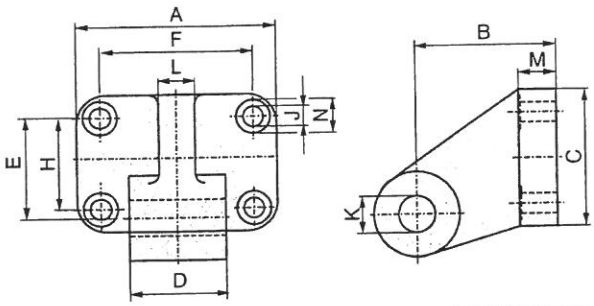

Cylinder	Type	A	B	C	D	E	F	H	ØJ^{H13}
ET32	32-2800T	51	32	31	25.6 $^{\pm 0.2}$	21	38	18	5.5
ET50	50-2800T	65	45	45	31.6 $^{\pm 0.2}$	33	50	30	6.6
ET80	80-2800T	86	63	60	49.6 $^{\pm 0.2}$	47	66	40	9
ET100	100-2800T	96	71	70	59.6 $^{\pm 0.2}$	55	76	50	11
ET125	125-2800T	124	90	90	69.0 $^{\pm 0.5}$	70	94	60	14

Rear Eye Mountings

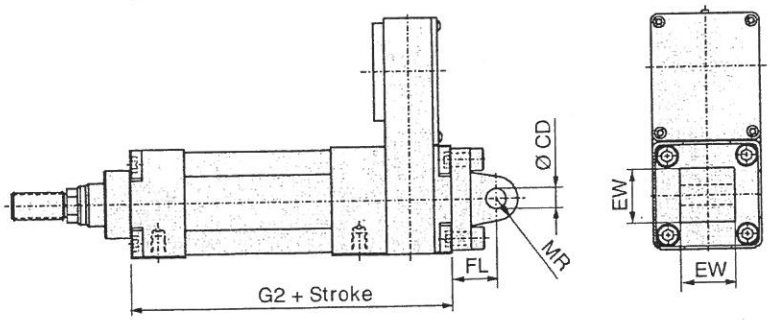

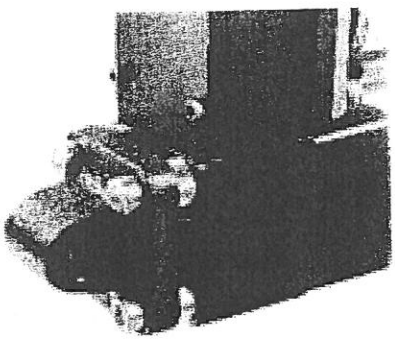

Cylinder	EW	ØCD*	MR*	FL
ET32	25.3 $^{\pm 0.5}$	10	10	22
ET50	31.3 $^{\pm 0.5}$	12	13	27
ET80	49.7 $^{\pm 0.5}$	16	20	36
ET100	59.0 $^{\pm 0.5}$	20	22	41
ET125	70.0 $^{\pm 0.5}$	25	25	48

See table on page 12 for dimensions of C, G and G2

Parker Hannifin
Electromechanical Division
Offenburg, Poole, Milan

Model Code and Ordering Information

ETB | 100 | - | M10 | P | A | 78

Feature	Description	Frame Size 32	50	80	100	125	Symbol
Series	ET Stepper Series	✔	✔	✔	✔	✔	ETB
	ET Brushless Servo Series	✔	✔	✔			ETS
Model /Size	32						32
	50						50
	80						80
	100						100
	125⑧						125⑧
Screw type	Ball screw, 5mm lead	✔	✔	✔	✔	✔	M05
	Ball screw, 10mm lead	✔	✔	✔	✔	✔	M10
	Ball screw, 16mm lead		✔				M16
	Ball screw, 20mm lead					✔	M20
	Ball screw, 25mm lead			✔			M25
	Ball screw, 40mm lead				✔		M40
	Ball screw, 50mm lead					✔	M50
Motor Mounting Style	Inline Direct Drive						L
	Parallel Motor Position 1						P①
	Parallel Motor Position 2						M②
	Parallel Motor Position 3						N③
	Parallel Motor Position 4						Q④
	Reverse Parallel Motor Position 1						R
	Reverse Parallel Motor Position 2						S
	Reverse Parallel Motor Position 3						T
	Reverse Parallel Motor Position 4						V
Drive Ratio	Inline or Parallel, Ratio 1:1	✔	✔	✔	✔	✔	A
	Parallel, Ratio 1.5:1		✔	✔			B⑤
	Parallel, Ratio 2:1		✔	✔			D⑤
	Parallel, Ratio 1:1.5	✔					Z
Stepper Motor Style	SY56, Prepared Only	✔	✔				20
	SY87, Prepared Only		✔	✔			30
	SY107, Prepared Only			✔			40
Brushless Servo motors	SM23 Prepared Only	✔	✔				20
	BE34 Prepared Only		✔	✔			30
	MD3450/3475-14, Prepared Only		✔	✔			37
	HDY55 (or equivalent SMH/SMB)	✔					47
	HDY70 (or equivalent SMH/SMB)		✔				57
	HDY92 (or equivalent SMH/SMB)		✔	✔			67
	HDY115 (or equivalent SMH/SMB)			✔	✔		77
	HDY142 (or equivalent SMH/SMB)				✔		87
	HJ96 (or equivalent SMH/SMB)			✔			J4
	HJ116 (or equivalent SMH/SMB)				✔		J5
	HJ155 (or equivalent SMH/SMB)				✔	✔	J6
	HJ190 (or equivalent SMH/SMB)					✔	J7
	Non-Standard Motor	✔	✔	✔	✔	✔	90
Gearboxes	Stober P3 Prepared Only		✔				P3
	Stober P4 Prepared Only			✔			P4
	Stober P5 Prepared Only				✔	✔	P5
	Stober P7 Prepared Only					✔	P7
	Neugart PLE60		✔	✔			N6
	Neugart PLE80			✔	✔		N8

① Will obstruct switch groove and lubrication point in 12o'clock orientation
② Will obstruct switch groove and lubrication point in 3o'clock orientation
③ Will obstruct switch groove and lubrication point in 6o'clock orientation
④ Will obstruct switch groove and lubrication point in 9o'clock orientation
⑤ Not available on ET32 or with larger frame size motors on ET50
= Switch groove and lubrication point orientation as viewed from cylinder shaft end
Δ Not available with in-line (L) motor mounting
⑧ Not available with IP65
⑨ Corrosion resistant mountings and rod ends available on request
⑩ Duty cycle should be limited to 80%. Furthermore, it is recommended that the factory be consulted on the environmental conditions to ensure suitability. Not available with ET125

Parker Hannifin
Electromechanical Division
Offenburg, Poole, Milan

- F M A 60 - A

Symbol	Description	Feature
A	Assigned by Factory	Design Series
IP65	Ingress Protection Rating (10)	
xxxx	Stroke length in mm **ET32**: 50 - 750 **ET50**: 50 - 1000 **ET80**: 100 - 1500 **ET100**: 100 - 1500 **ET125**: 100 - 2400	Stroke Length [mm]
Omit	Standard (12 o'clock)	Body Orientation
A	3 o'clock	=
B	6 o'clock	
C	9 o'clock	
M	Male - Metric Standard	Rod End (9)
F	Female	
K	Male - Imperial	
C	Clevis	
S	Spherical Rod Eye	
R(8)	Linear Rod Guide Module	
X	Special	
BΔ	Foot Mounting (MS1)	Cylinder Mounting (9)
CΔ	Rear Clevis (MP2-R)	
D	Trunnion Mounting (MT4)	
EΔ	Rear Eye (MP4)	
F	Bottom Tap (MS4) (Std)	
G	Foot Side Lug	
HΔ	Rear Flange (MF2)	
J(8)	Front Flange (MF1)	
NΔ(8)	Front & Rear Flange (MF1 & MF2)	
X	Special	

HDY/HJ - SMH/SMB Servo Motor Cross Reference

*(Mechanical mounting detail only)

HD/HJ	*MB/MH equivalent**	*Centering Pilot*	*Fixings*	*Shaft*
HDY55	SMH/SMB60, Flange type 8, Shaft ø9mm	ø40 h6 x 2.5	ø5.5 on ø63 PCD	ø9 x 20
HDY70	SMH/SMB60, Flange type 5, Shaft ø11mm	ø60 h6 x 2.5	ø6.0 on ø75 PCD	ø11 x 23
HDY92	SMH/SMB82, Flange type 8, Shaft ø14mm	ø80 h6 x 3.5	ø6.5 on ø100 PCD	ø14 x 30
HDY115	SMH/SMB82, Flange type 5, Shaft ø19mm	ø95 h6 x 3.5	ø9.0 on ø115 PCD	ø19 x 40
	SMH/SMB100, Flange type 5, Shaft ø19mm	ø95 h6 x 3.5	ø9.0 on ø115 PCD	ø19 x 40
	MH/MB105, Flange type 5, Shaft ø19mm	ø95 h6 x 3.5	ø9.5 on ø115 PCD	ø19 x 40
HDY142	MH/MB145, Flange type 5, Shaft ø24mm	ø130 h6 x 3.5	ø11.5 on ø165 PCD	ø24 x 50
HJ96	MH/MB105, Flange type 9, Shaft ø19mm	ø80 h6 x 3.5	ø7.0 on ø100 PCD	ø19 x 40
HJ116	MH/MB105, Flange type 6, Shaft ø24mm	ø110 h6 x 3.5	ø9.0 on ø130 PCD	ø24 x 50
HJ155	MH/MB145, Flange type 5, Shaft ø32mm	ø130 h6 x 3.5	ø11.5 on ø165 PCD	ø32 x 58
HJ190	MH/MB205, Flange type 5, Shaft ø38mm	ø180 h6 x 4.0	ø14.0 on ø215 PCD	ø38 x 80