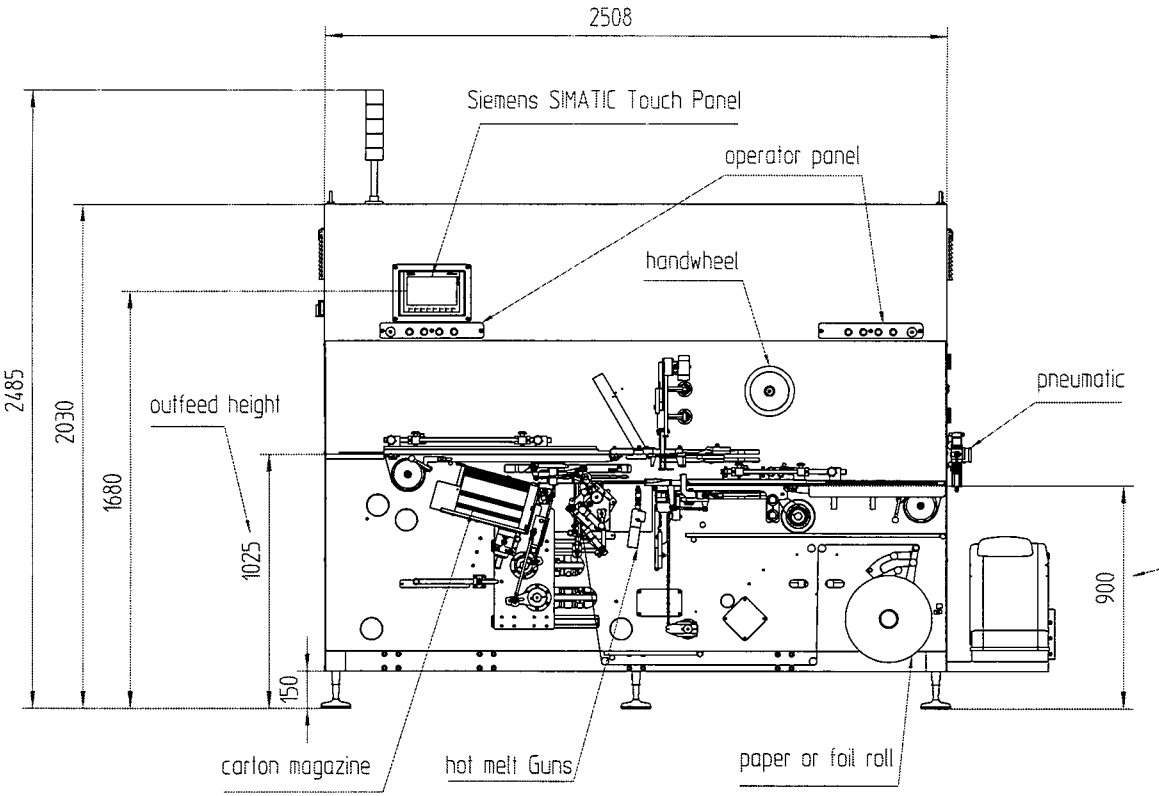

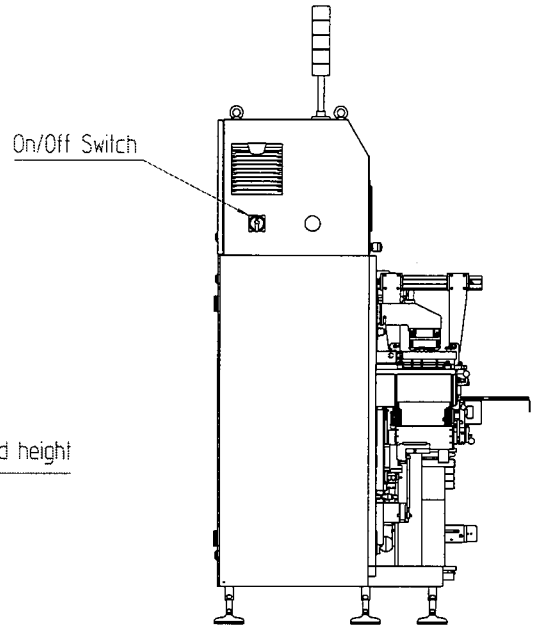

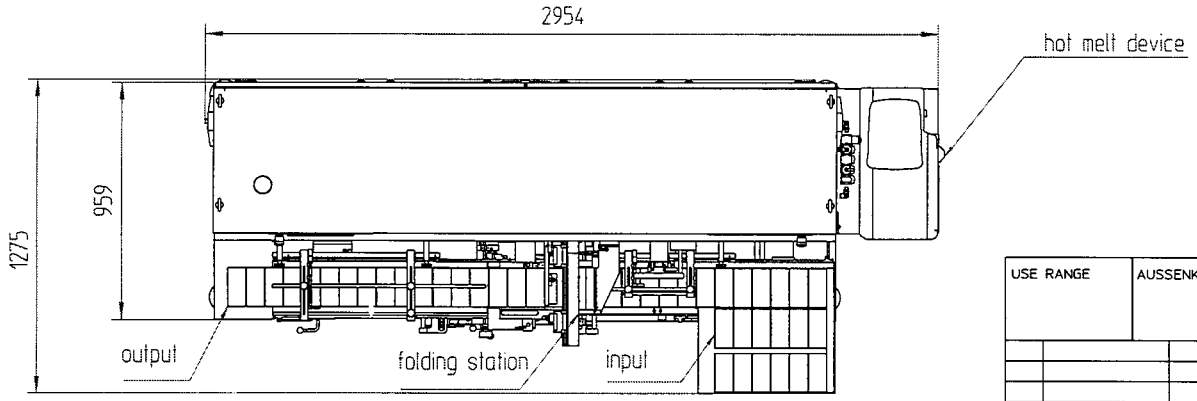

USE RANGE	AUSSENKANTEN	TOLERANCE	SURFACE	ARCHIVE	SCALE
				MATERIAL	

					DATE	NAME	DESCRIPTION
				DRAWN			
				APPR.			
				RLS.			

				DRAWING-NUMBER		SHEET
						OF
INDEX	DESCRIPTION	DATE	NAME	ORIGINAL	I.EXCH.F.	I.EXCH.TH.

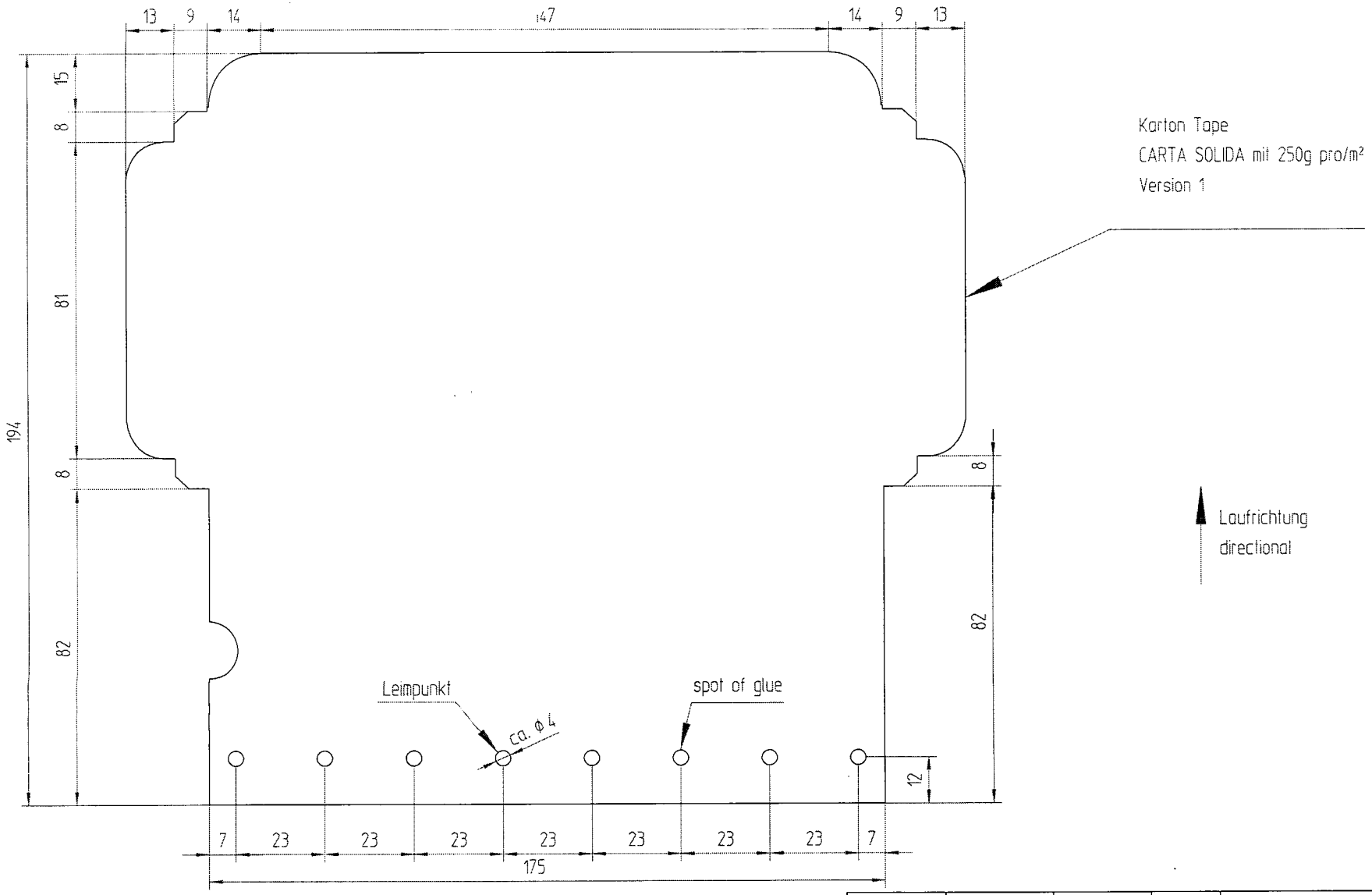

USE RANGE	AUSSENKANTEN	TOLERANCE	SURFACE	ARCHIVE	SCALE
				MATERIAL	

	DATE	NAME	DESCRIPTION
DRAWN			
APPR.			
RLS.			

DRAWING-NUMBER	SHEET
	OF

INDEX	DESCRIPTION	DATE	NAME	ORIGINAL	I.EXCH.F.	I.EXCH.TH.