NO	BY	ZONE	DESCRIPTION	BY	CHK	APPR	DATE
1			ADDED (8 17, 18 - (8-2) ADDED VIEW	QMD			2/13/0
1			LOCATED 17, 18	RHD			6/1/87

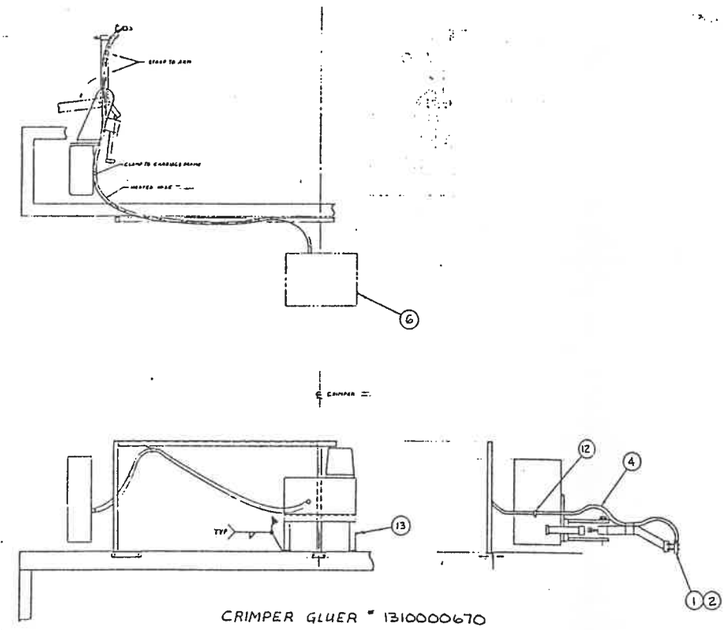

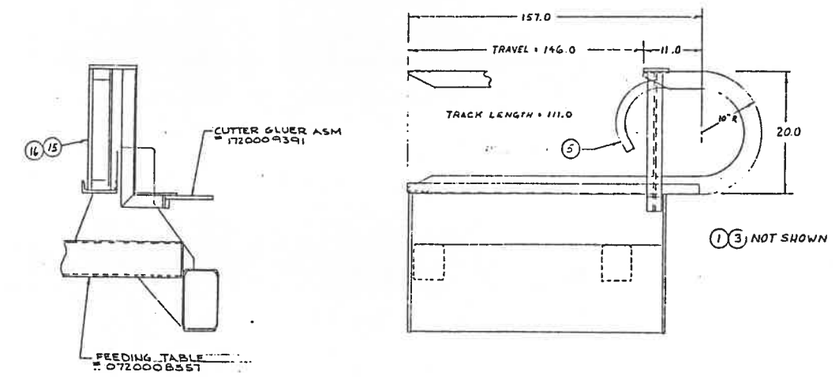

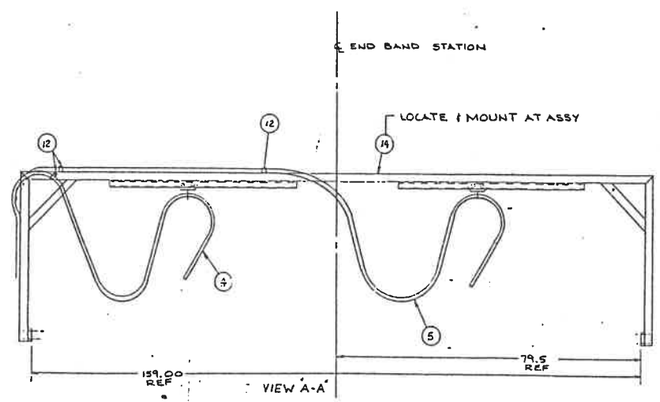

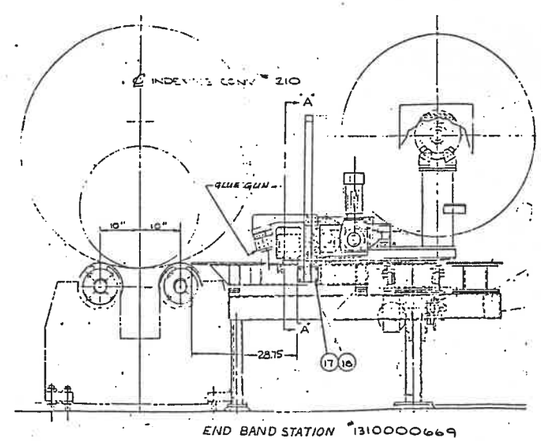

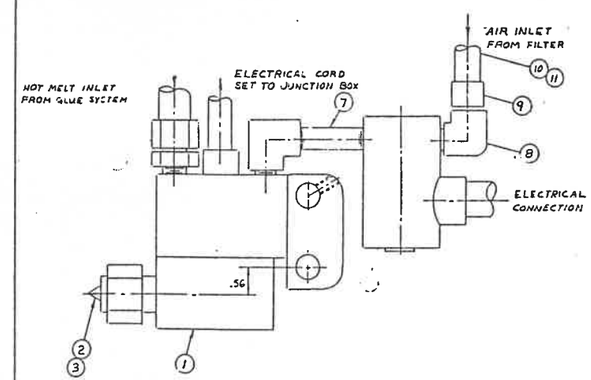

NEXT ASSY	USED ON	TOLERANCES UNLESS OTHERWISE SPECIFIED .X ± .100 .XX ± .030 .XXX ± .005 DECIMETS ± .01 CHAMFERS .06 X 45° ANGLES ± 1° BREAK ALL SHARP EDGES	DRAWN JAB 2-9-87	WARTSILA-APPLETON, INC. Wärtsilä Paper Finishing Systems	
APPLICATION			CHECKED	GLUER ASSEMBLIES	REV 1
SUPERSEDES	SUPERSEDED	MATERIAL	APPROVED	SIZE 0 / DRAW-INDEX NO 70433 / DRAWING NO 0720009414	SIZE
				SCALE ~ / WT	LBS / SHEET 1 OF 1

REFERENCE 2-250-3949