COPRINOX

HEAT EXCHANGER

Code n° **BEM 010 1392** Location ref:

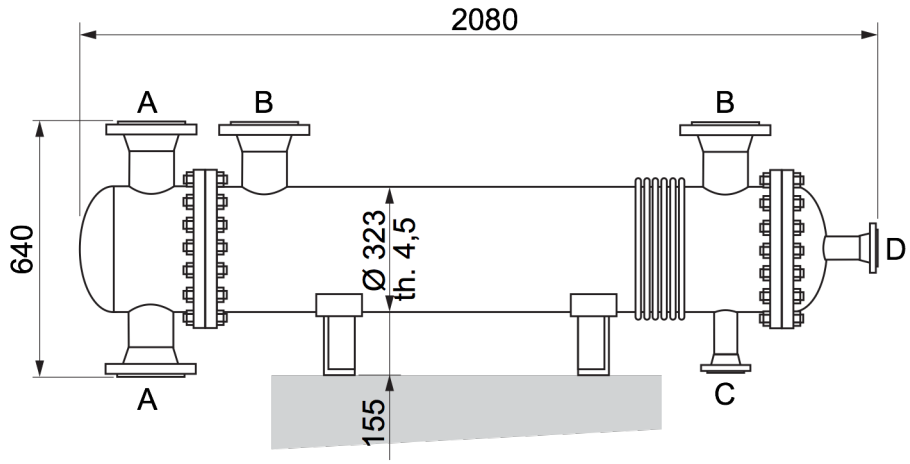

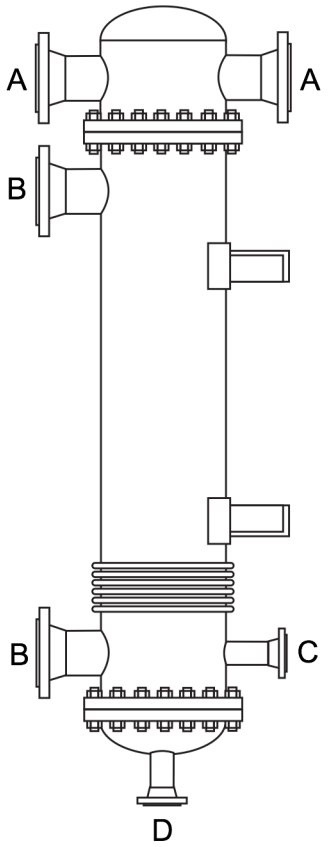

HEATING SURFACE m^2	10,5	TUBE SIDE	SHELL SIDE
Design Pressure KG/cm2		-1 / +5	-1 / +5
Design Temperature °C		-10 / +200	-10 / +200
Capacity liters		75	64

ANCC or ISPESL certification:		PED
Shell side traverse baffles	n°	5
Tube side passes	n°	2

TUBE O.D.	19,05
TUBE THICKNESS	1,65
TUBE N°	118
TUBE EXPAND	X
TUBE WELDED	X
EXPANSION JOINT	X

NOZZLE DIMENSIONS

Pos	Service	Size inch.
A	Tube side inlet / outlet	DN100
B	Shell side inlet / outlet	DN100
C	Shell side condensate outlet	DN50
D	Tube side condensate outlet	DN50
E		

VERTICAL	X
ORIZZONTAL	X
FLOATING HEAD	
U - TUBE BUNDLE	
KETTLE	

MATERIALS

SHEEL	AISI 316L
TUBES	AISI 316L
TUBESHEET	AISI 316L
HEAD BONNET OR CHANNEL	AISI 316L

USED	
USED RECONDITIONED	
UNUSED	X

WEIGHT (approx) Kg **345**

MANUFACTURER: COPRINOX

NOTE Model BEM10EXP