OHAUS®

Precision *Plus* Electronic Balances

MODELS
TP200S, TP400S, TP400D, TP600S,
TP2KS, TP4KS and TP4KD

Instruction Manual

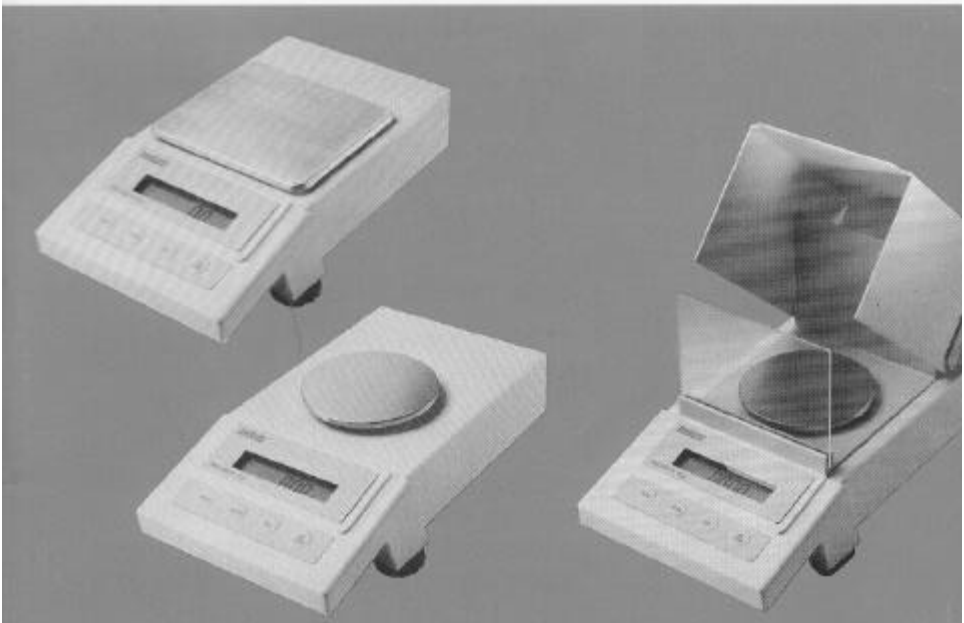

WARNING: THIS EQUIPMENT GENERATES, USES, AND CAN RADIATE RADIO FREQUENCY ENERGY AND IF NOT INSTALLED AND USED IN ACCORDANCE WITH THE INSTRUCTION MANUAL, MAY CAUSE INTERFERENCE TO RADIO COMMUNICATIONS. IT HAS BEEN TESTED AND FOUND TO COMPLY WITH CLASS "A" REQUIREMENTS IN BOTH PART 15 OF FCC RULES AND THE RADIO INTERFERENCE REGULATION OF THE CANADIAN DOC. THIS EQUIPMENT DOES NOT EXCEED THE LIMITS FOR RADIO NOISE EMISSIONS. OPERATION OF THIS EQUIPMENT IN A RESIDENTIAL AREA MAY CAUSE UNACCEPTABLE INTERFERENCE TO RADIO AND TV RECEPTION REQUIRING THE OPERATOR TO TAKE WHATEVER STEPS ARE NECESSARY TO CORRECT THE INTERFERENCE.

LE PRÉSENT APPAREIL NUMÉRIQUE N'EMET PAS DE BRUITS RADIOÉLECTRIQUES DEPASSANT LES LIMITES APPLICABLES AUX APPAREILS NUMÉRIQUES DE CLASSE A PRESCRITES DANS LE REGLEMENT SUR LE BROUILLAGE RADIOÉLECTRIQUE EDICTÉ PAR LE MINISTERE DES COMMUNICATIONS DU CANADA.

PREFACE

Your OHAUS® Precision *Plus* balance is a precision weighing instrument that is designed to be accurate and easy to operate. This manual explains how to use your balance properly and should be read before operation.

Precision *Plus* balances are software controlled devices with a host of user-programmable features. Calibrating and setting up features are easily accomplished through the software using the front panel buttons and display. These are a few of the standard features included with Precision *Plus* balances:

Selectable Weighing Units

The balance is shipped to you preprogrammed to display weight in grams only. However, using the built-in setup program, you can choose up to 12 different weighing units, a user-definable custom unit, parts counting and percent weighing.

RS-232 Interface

The bi-directional RS-232 interface enables Precision *Plus* balances to communicate with printers and computers. Instructions on connecting and using the interface are included in this manual.

Dual Range Operation (Models TP400D and TP4KD)

These models feature two operating ranges; a fine range with greater readability for lower capacities, and a coarse range for higher capacities.

TABLE OF CONTENTS

UNPACKING

Your Precision *Plus* balance was shipped with the following items:

- a pan
- a pan support
- an in-service cover
- an AC power adapter
- a weigh below hook
- a draft shield kit (TP200S model only)
  includes draft shield, clamp, clamp screw and hex wrench
- this instruction manual
- your warranty card

It is recommended to save the carton and packing material for storing transporting the balance.

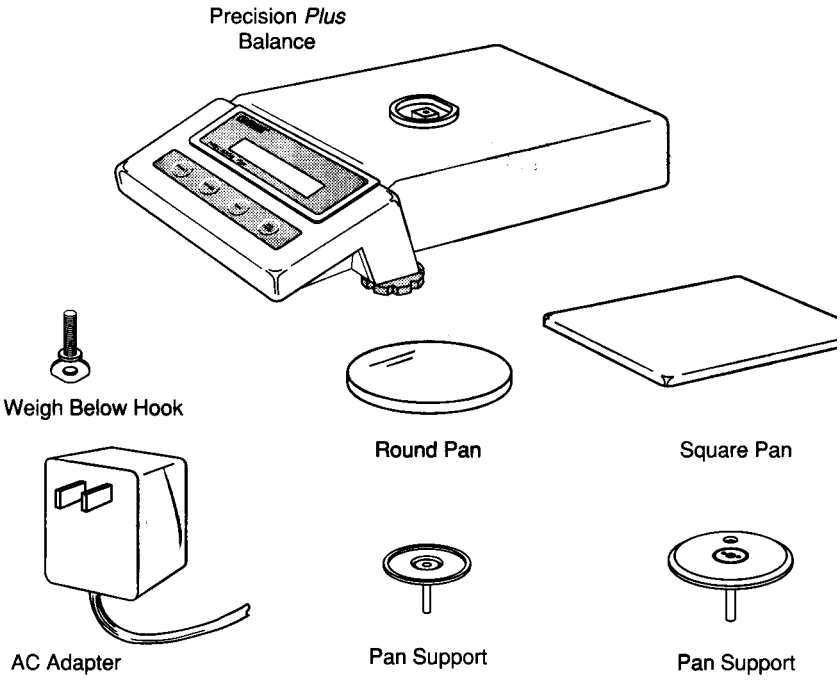

INSTALLATION

Environment

The balance should always be used in an environment which is free from excessive air currents, corrosives, vibration, and temperature or humidity extremes. These factors will affect displayed weight readings.

DO NOT install the balance:

- next to open windows or doors causing drafts or rapid temperature changes.
- near air conditioning or heat vents.
- near vibrating, rotating or reciprocating equipment.
- near magnetic fields or equipment that generates magnetic fields.
- on an unlevel work surface.

In-Service Cover

The cover is placed on the balance before shipment. If desired, the adhesive pads provided may be used to secure the cover to the balance to avoid possible movement.

Peel the backing off of one side of each adhesive pad and press the pads onto the top of the balance as shown in the diagram.

Remove the backing from the top of the pads, place the cover on the balance and press down on the pads.

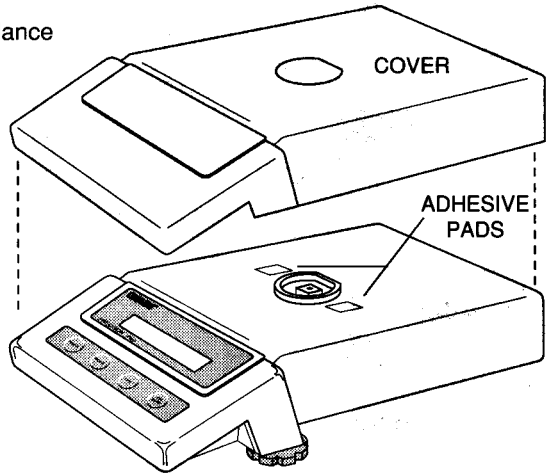

Leveling the Balance

The balance is equipped with a level indicator on the rear and two adjustable leveling feet (see diagram). Adjust the leveling feet until the bubble appears in the center circle of the indicator.

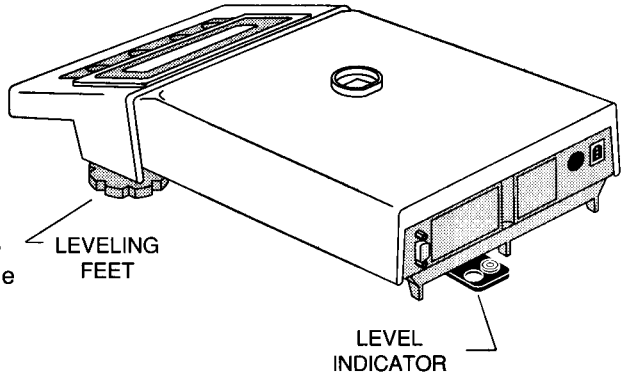

Draft Shield (Model TP200S)

To install the draft shield:

1. Position the draft shield on top of the balance as shown. Make sure the rib at the front of the draft shield base butts up against the raised lip of the display panel.

2. Slip the locking clamp over the spill ring and base of the draft shield. The clamp must be positioned toward the front of the balance, and about 45° to the right or left.

   Tighten the set screw using the hex wrench provided.

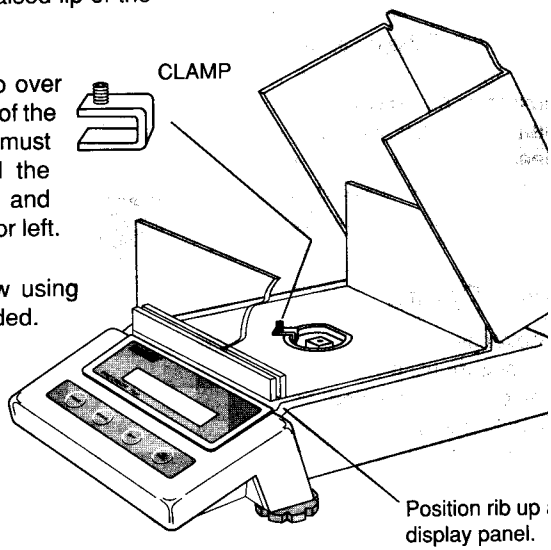

Pan and Pan Support

Square Pan

Insert the pan support into the hole in the weighing machanism as shown in the illustration. Make sure the hole in the pan support faces the rear of the balance. Once installed, the pan support should not rotate.

The pan has a guide pin which protrudes from the bottom. Place the pan on the support making sure the guide pin is inserted in the hole in the pan support.

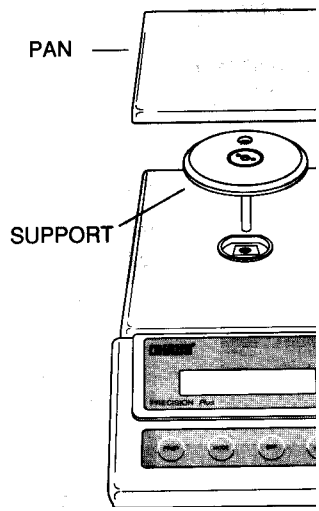

Round Pan

Insert the pan support into the hole in the weighing mechanism.

Place the pan on the support.

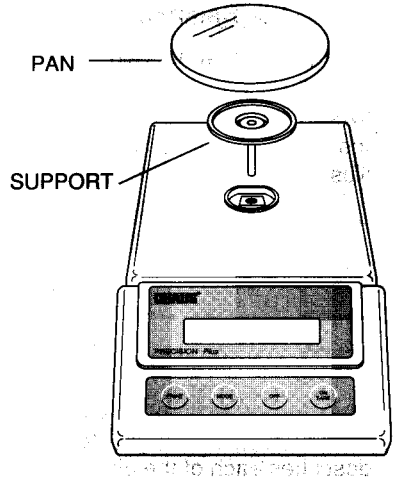

Weigh Below Hook

If the weigh below hook will be used, it may be installed in the bottom of the balance. Simply screw the hook into the threaded hole in the pan support which is visible through the access hole in the bottom of the balance.

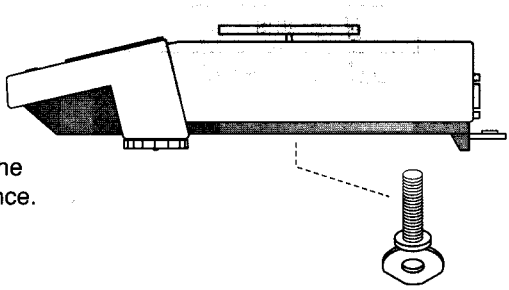

AC Adapter

Plug the molded connector of the adapter into the receptacle at the rear of the balance (see diagram). Plug the adapter into a convenient AC outlet.

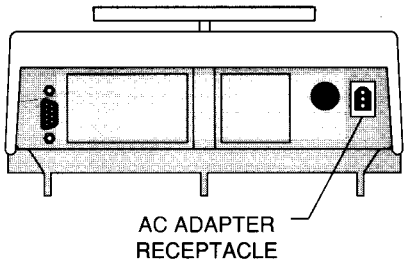

Turning the Balance ON

With no load on the pan, switch the balance ON by pressing the TARE button. When first switched ON, all segments of the display should be on as shown in the illustration.

This "display check" will be displayed briefly, then the model number of the balance will be displayed. If the balance is a dual range model (TP400D or TP4KD), the word "dUAL" will then be displayed.

The display will momentarily blank and then indicate zero. The following table describes each of the display indicators.

DISPLAY INDICATORS

g	grams	lb	pounds
dwt	pennyweight	lb:oz	pounds:ounces
c	carats	▸	custom unit
oz	avoidupois ounces	PC	parts counting
oz t	troy ounces	%	percent weighing
GN	grains	*	stability indicator
t	taels	N	net indicator
:	mommes	G	gross (total) indicator

CHECKING CALIBRATION

Before using the balance, calibration should be checked. The balance has been calibrated before shipment, however, it could be influenced by factors such as:

- variations in the earths gravitational field at different latitudes of the world
- rough handling
- changes in work location

Weights required for checking calibration are listed in the adjacent table.

CALIBRATION CHECK WEIGHTS

MODEL	WEIGHT
TP200S	200g
TP400S	400g
TP400D	400g
TP600S	500g
TP2KS	2kg
TP4KS	4kg
TP4KD	4kg

Weights must meet ANSI/ASTM Class 1 Tolerance. Calibration weights are available as accessories (see page 51).

To check the balance's calibration, place the appropriate weight on the center of the pan and read the displayed weight.

If the displayed weight differs from the known weight by more than specifications allow (see SPECIFICATIONS on page 50), the balance must be calibrated as explained in the section "CALIBRATION MENU AND PROCEDURE".

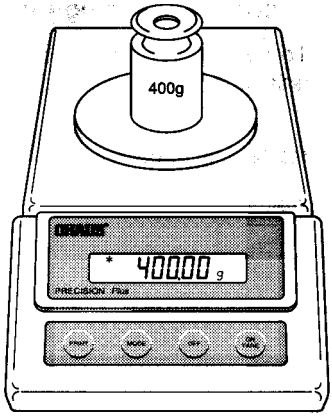

OPERATION

The balance is shipped preprogrammed and ready for operation using factory default settings. The default settings are listed under "Reset to Factory Defaults" in the SETUP MENU section.

If the balance has not yet been setup for your specific operating requirements, refer to the section titled "USING MENUS TO CONFIGURE THE BALANCE".

Auto Range Models (TP400D and TP4KD)

Auto range balances offer both a fine range (lower capacity/higher readability) and a coarse range (higher capacity/lower readability). When first turned on, the balance is in the fine range. It remains in this range until the weight on the pan exceeds the fine range capacity. When weight on the pan is greater than the fine range capacity, the balance switches to the coarse range.

If weight on the pan falls back to within the fine range capacity, coarse range readability remains in effect until you tare the balance with no weight on the pan.

Selecting a Weighing Unit

To select one of the available weighing units or operating modes for use,

repeatedly press (MODE) until the desired indicator appears on the display.

If the desired indicator does not appear, refer to "Unit Selection" in the "SETUP MENU" section.

0.00 g or oz, dwt etc.

Default setting is grams only.

Weighing

1. Select the desired weighing unit.
2. Press (ON TARE) to rezero the display.
3. Place the object(s) or material to be weighed on the pan.
4. Wait for the stability indicator to appear before reading the weight.

STABILITY INDICATOR

* 123.45 g

Taring

When weighing material or objects that must be held in a container, taring enables you to store the container weight in the balance's memory, separate from the weight of the material in the container.

1. Place an empty container on the pan. Its weight will be displayed.
2. Press (ON TARE).

   The display will show zero and the container's weight will be stored in memory.

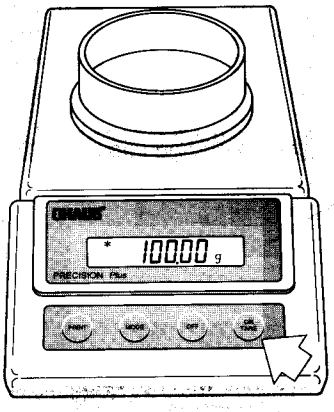

3. Add material to the container. As material is added, its net weight will be displayed.

4. Removing the container and material from the pan will cause the balance to display the container's weight as a negative number.

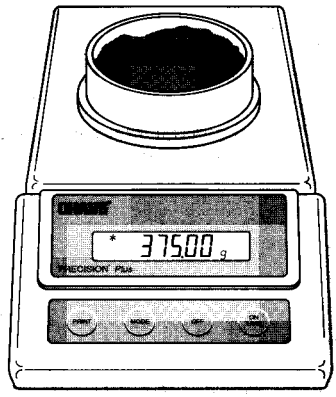

Tared weight remains in balance memory until (ON TARE) is pressed again.

Parts Counting

NOTE: Parts counting must first be enabled in the Setup menu to use it.

Parts Counting Default Settings

Parts Counting Mode ..... Disabled
PC Err ..... OFF
PC Alternate Display ..... TOTAL PCS

In the parts counting mode, the balance calculates and displays the quantity of parts you place on the pan. Since the balance determines the quantity based on the average weight of a single part, all parts must be reasonably uniform in weight. The accuracy of parts counting results is determined by the error level entered in "PC Err" of the Setup menu.

PC Con PC

To perform parts counting, use the following procedure:

1. Repeatedly press (MODE) until "PC Con" is displayed.

2. Place an empty container on the pan (if one will be used).

3. Press (ON TARE).

   NOTE: To exit or restart parts counting at any time: Press and hold (ON TARE) until "PC Con" is displayed, then release it. Return to step 2 to restart, or press (MODE) to exit.

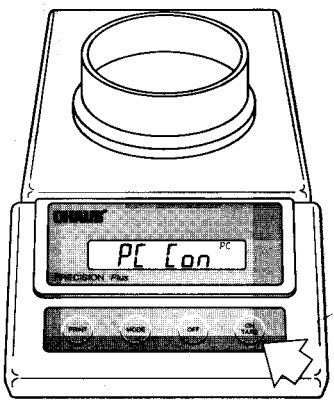

4. "Add 5" will be displayed. The balance needs a sample of the parts to use as a reference for counting. The default for the sample size is 5 parts, but this can be changed to 10, 20, 30, 40, 50 or 100 parts. (Larger samples yield more accurate results.)

Add 5 PC

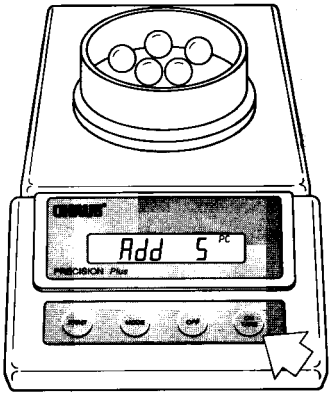

5. To change the sample size, repeatedly press (MODE) until the desired quantity is displayed.

6. Add the sample number of pieces to the container.

7. Press (ON TARE).

If "Add X" is displayed, the sample is too small to provide results within the selected error level ("PC Err" of the Setup menu). "X" represents the number of additional parts needed to provide a sufficient sample.

Add the required number of parts, then press (ON TARE) again.

8. The balance will calculate the average piece weight based on the net weight of the sample, and then display the current number of parts.

* 5 PC

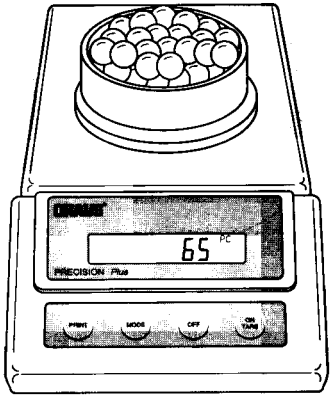

9. Add parts to the container as desired and read the quantity on the display.

Parts Counting Alternate Display

To view the weight or gross number of parts on the pan, press MODE.

Weight is displayed in the weighing unit selected in "PC ALt" in the Setup menu.

IF NET has been selected for the alternate display, you may repeatedly tare the balance as needed. The alternate display will show the net weight of parts added since the last tare.

IF TOTAL has been selected for the alternate display, total weight or quantity of parts on the pan (relative to weight of container already tared) will be displayed. Taring will not affect the alternate display.

NOTES:
1. The primary parts count display always shows the NET number of parts.
2. Average piece weight is not affected by taring.

To view the average piece weight press and hold PRINT.

To switch between alternate display and parts count display, press MODE.

You may change the alternate display unit through the Setup menu without losing the current average piece weight.

To exit or restart parts counting, press and hold ON TARE until "PC Con" is displayed, then release it. Return to step 2 to restart, or press MODE to change to another operating mode.

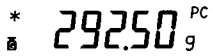

Alternate Display

Lights to indicate NET.

Lights to indicate TOTAL or Gross.

Average Piece Weight

Percent Weighing

NOTE: Percent weighing must first be enabled in the Setup menu to use it.

Percent weighing permits you to place a reference load on the balance, then view other loads as a percentage of the reference. The load you place on the pan as a reference may be displayed as any percentage you select from 5% to 100% (in 1% increments). One hundred percent does not necessarily have to represent the reference load. Subsequent loads, displayed as a percentage of the reference are limited only by the capacity of the balance.

To perform percent weighing, use the following procedure:

1. Repeatedly press (MODE) until "PctCon" is displayed.

2. Place an empty container on the pan (if one will be used).

3. Press (ON TARE).

4. "SEt xxx" will be displayed where "xxx" is the current reference percentage.

5. The reference percentage can be changed to any value from 5 to 100.

   Press (MODE) to change the value. (Pressing and holding (MODE) causes the display to increment quickly.)

Percent Weighing Default Settings

% Mode ..... Disabled
% Alternate Display ..... TOTAL %
Reference % 100%

EXAMPLE

A 10g reference load is set for 20%:

- A subsequent load of 100 g will be displayed as 200%.
- A subsequent load of 200 g will be displayed as 400%.

PctCon %

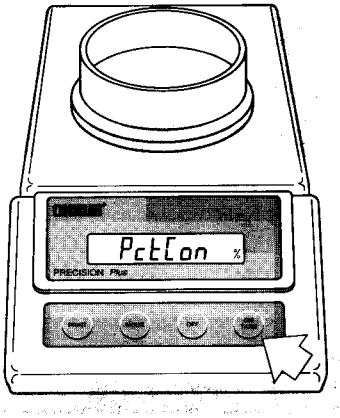

SEt 100 %

6. Place the reference load in the container (or directly on the pan if no container is used).

7. Press ON TARE.

8. The display will show the reference load as the percentage you selected.

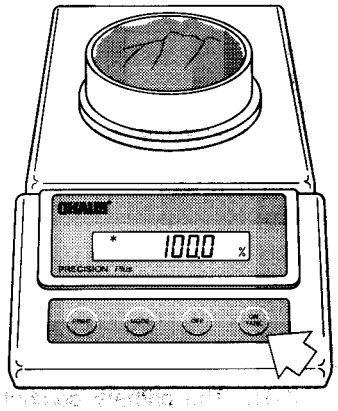

NOTE: To exit or restart percent weighing at any time, press and hold ON TARE until "PctCon" is displayed, then release it. Return to step 2 to restart, or press MODE to change to another weighing mode.

9. Remove the reference load from the balance and replace it with another load.

10. The second load will be diplayed as a percentage of the reference.

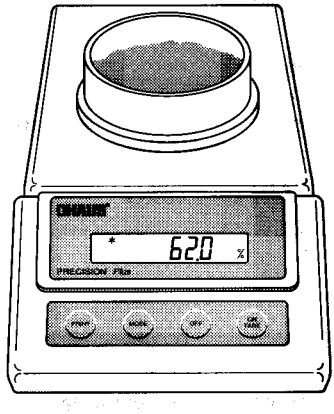

The reference weight may be viewed at any time by pressing and holding PRINT.

Percent Weighing Alternate Display

To view the weight or gross percentage of the load on the pan, press MODE.

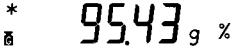

Weight will be displayed in the weighing unit selected in "Pct ALt" in the Setup menu.

IF NET has been selected for the alternate display, you may repeatedly tare the balance between weighings. The alternate display will show the net weight of material added since the last tare.

IF TOTAL has been selected for the alternate display, the balance will display the gross weight (relative to weight of container already tared) or percentage of material on the pan. Taring will not affect the alternate display.

NOTE: The primary percentage display always shows the NET percentage.

To switch between the alternate display and the percentage display, repeatedly press MODE .

NOTE:You may change the alternate display unit through the Setup menu without losing the current reference.

To exit or restart percent weighing,

Press and hold ON TARE until "PctCon" is displayed, then release it. Return to step 2 to restart, or press MODE to change to another weighing mode.

N Lights to indicate NET.

G Lights to indicate TOTAL or Gross.

* 62.0 %

Percent Display

* 95.43 g %

Alternate Display

USING MENUS TO CONFIGURE THE BALANCE

Precision *Plus* balances contain three display "menus" which enable you to calibrate and configure the balance for your specific operating requirements.

Calibration Menu: Used to calibrate the balance for span or linearity

Setup Menu: Used to enable, disable or customize different balance features

Print Menu: Used to configure the RS-232 interface

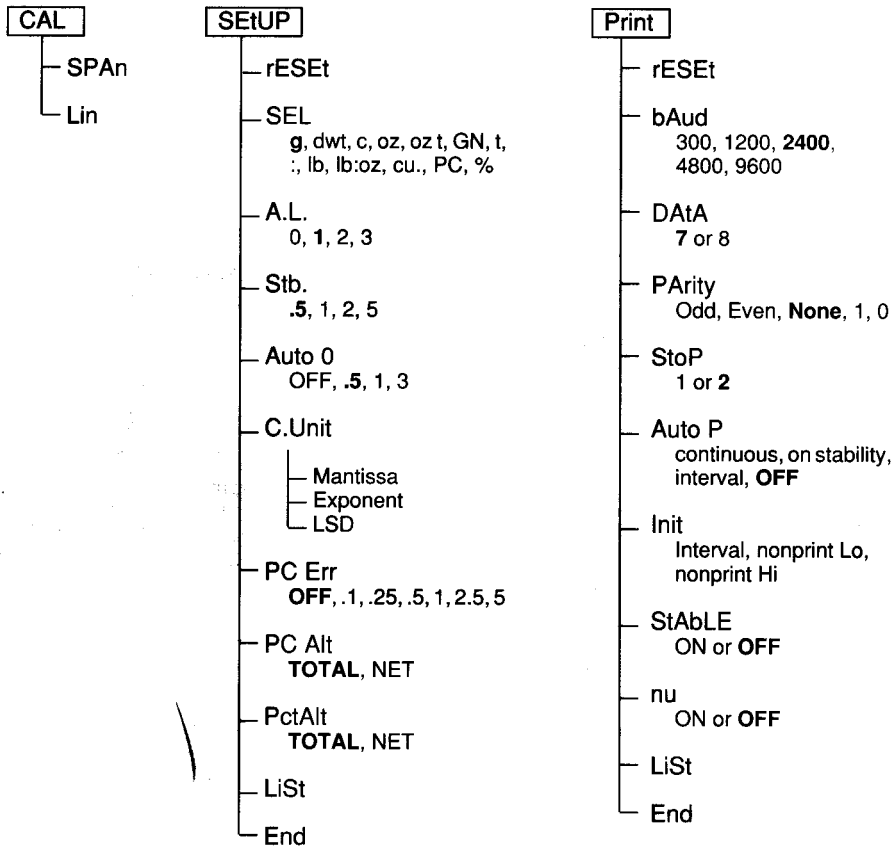

To access a menu, press and hold (ON TARE) until desired menu appears, then release it.

Original factory default settings are shown in boldface type.

Use these buttons to step through menus and select submenus:

(PRINT) previous selection

(MODE) next selection

(ON TARE) select displayed item

CALIBRATION MENU AND PROCEDURE

Precision *Plus* balances can be calibrated in two ways: Span calibration or Linearity calibration.

Span calibration resets the balance's weighing range using two weight values: zero and a weight value at or near the balance's capacity.

Linearity calibration minimizes deviation between actual and displayed weights within the balance's weighing range. Three weight values are used: zero, a weight value within the balances weighing range, and a weight value at or near the balance's specified capacity.

Calibration should be performed as necessary to ensure accurate weighing. Weights required to perform the procedures are listed in the adjacent table.

CALIBRATION WEIGHTS

MODEL	LINEARITY WEIGHTS	SPAN ONLY WEIGHT
TP200S	100g, 200g	200g
TP400S	200g, 400g	400g
TP400D	50g, 400g	400g
TP600S	200g, 500g	500g
TP2KS	1kg, 2kg	2kg
TP4KS	2kg, 4kg	4kg
TP4KD	500g, 4kg	4kg

Weights must meet ANSI/ASTM Class 1 Tolerance. Calibration weights are available as accessories (see page 51).

CALIBRATION MENU TABLE

SPAn	selects span calibration
L in	selects linearity calibration

Selecting either item from the menu will begin the calibration procedure.

If the Calibration menu has been locked out, it will not be accessible. See the "MENU LOCK-OUT PROTECTION" section to enable it.

BEFORE BEGINNING CALIBRATION, MAKE SURE WEIGHTS ARE ON HAND. If you begin calibration and realize weights are not available, either turn the balance off, or go through the procedure without weights. The balance will use previously stored calibration data.

To access the calibration menu and begin calibration:

1. Press and hold (ON TARE) until "CAL" is displayed, then release it.

CAL

2. When (ON TARE) is released, "SPAn" will be diplayed.

To select span or linearity calibration,

press (MODE) to change the selection

press (ON TARE) to accept the displayed selection.

SPAn

Lin

3. When (ON TARE) is released "C 0 g" will be displayed indicating that no weight should be on the pan.

C 0 g

4. With no weight on the pan,

press (ON TARE).

5. The display will show "C" followed by the value of the weight which must be placed on the pan.

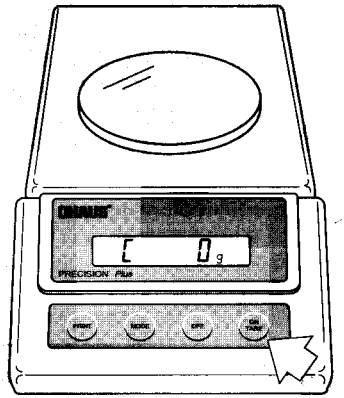

6. Place the required weight on the pan and press (ON TARE).

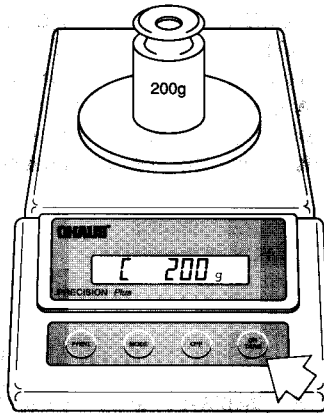

7. If Span calibration is being performed, proceed to step 10.

   If Linearity calibration is being performed, continue with step 8.

8. The display will show "- C -" momentarily, then "C" followed by the next weight to be placed on the pan.

   DO NOT disturb the balance when "- C -" is displayed. Disturbances will result in improper calibration.

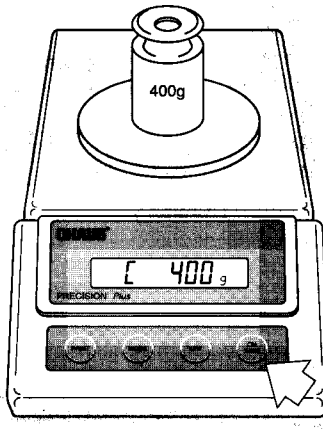

9. Place the required weight on the pan, then press (ON TARE).

10. The display will show "- C -" while the balance recalibrates. When the weight on the pan is displayed along with the current unit indicator, the balance is recalibrated.

    DO NOT REMOVE CALIBRATION WEIGHT(S) UNTIL WEIGHT VALUE IS DISPLAYED AND UNIT INDICATOR APPEARS.

Calibration Protection

The calibration menu may be "locked-out" to prevent unauthorized personnel from changing calibration. To lock out the calibration menu refer to the "MENU LOCK-OUT PROTECTION" section.

SETUP MENU

The Setup menu is used to customize the operation of the balance for your specific requirements. It contains submenus which enable you to turn features on or off, and program balance parameters. The following table shows the sequence in which submenus appear on the Setup menu.

SETUP MENU TABLE

** rESEt	sets all submenus below to original factory default settings
SEL	specifies which weighing units and operating modes will be available during operation
AL	specifies the averaging level
Stb	specifies the desired stability range
Auto-0	sets Auto-Zero feature OFF or to .5, 1 or 3 divisions
* CUnit	enables entering a custom weighing unit
* PC Err PC	specifies an allowable percentage of error for parts counting results
* PC ALt PC	specifies the weighing unit for parts counting alternate display
* PctAlt %	specifies the weighing unit for percent weighing alternate display
List	enables printing a listing of current Setup menu settings
End	used to exit the Setup menu and store your selections

* "CUnit" only appears in menu if custom unit is enabled in "SEL" submenu.
"PC Err" and "PC Alt" only appear in menu if parts counting is enabled in "SEL" submenu.
"PctAlt" only appears in menu if percent weighing is enabled in "SEL" submenu.

** "rESEt" does not appear in menu if menu has been locked out.

To access the Setup menu press and hold (ON TARE) until "SEtUP" is displayed, then release it.

SEtUP

If "SAFE" is displayed, the Setup menu has been locked out. Settings may be viewed but not changed. See the "MENU LOCK-OUT PROTECTION" section to enable it for making changes.

To access a submenu:

1. Repeatedly press (MODE) until the desired submenu is displayed.

2. Press (ON TARE) to select the displayed submenu.

NOTE: YOU MUST USE "End" to store any changes you make to the Setup menu.

The following sections describe each item on the Setup menu in detail.

Reset to Factory Defaults

rESEt

This submenu enables you to reset all Setup menu selections to the factory default settings outlined in the adjacent table.

SETUP MENU FACTORY DEFAULTS	
Unit Selection	Grams
Averaging Level	1
Stability Range	.5d
Auto-Zero Tracking	.5d
Conversion Factor	
Mantissa	1.000000
Exponent	0
LSD	1
PC Error Level	OFF
PC Alt. Display	TOTAL PCS
% Alt. Display	TOTAL %

To reset to factory defaults:

1. Access the "rESEt" submenu.

2. Press (MODE) to change the setting.

   Select "yES" to reset settings or, "no" to leave surrent settings.

   Press (ON TARE) to accept the displayed setting.

yES

no

Unit Selection

SEL

The Unit Selection submenu permits you to specify which weighing units and operating modes will be enabled for use during operation. The adjacent table lists the units and modes available on Precision *Plus* balances.

Weighing Units and Modes	
grams	momme
pennyweight	pounds
carats	pounds : ounces
ounces	custom unit
troy ounces	parts counting
grains	percent weighing
taels	

To enable or disable the various weighing units and operating modes, use the following procedure:

1. Access the "SEL" submenu.

2. The display will show the grams unit indicator (g) along with the current status (ON/OFF).

On g

OFF g

3. Press (MODE) to change the status.

   Press (ON TARE) to accept the displayed status.

   When (ON TARE) is released, the display will show the next unit indicator along with the current status.

4. Set each unit or mode On or OFF as in step 3.

Taels

If taels are enabled, you will be required to choose one of three different taels: Hong Kong, Singapore, or Taiwan.

When the display shows "tAEL 1",

press (MODE) to change to another tael,

press (ON TARE) to accept the displayed tael.

When the last weighing unit/mode has been set, the display will show "SEL" again and the Setup menu will be returned.

tAEL 1 Hong Kong

tAEL 2 Singapore

tAEL 3 Taiwan

Averaging Level

Averaging level compensates for vibration or excessive air currents on the pan. During operation, the balance continually takes weight readings from the load cell. Successive readings are then digitally processed to achieve a stabilized display. Use this submenu to specify how much processing you need to obtain stable results.

NOTE: Averaging level does not affect balance accuracy.

Select one of four averaging levels using the adjacent table as a guide.

	AVERAGING LEVELS
0	reduced stability, fastest stabilization time
1	**normal stability, normal stabilization tim**
2	more stability, slow stabilization time
3	maximum stability, slowest stabilization time

To view or change the averaging level:

1. Access the "AL" submenu to display the current setting.

AL 1

2. Press (MODE) to change the setting.

   Press (ON TARE) to accept the displayed setting.

When (ON TARE) is released, "AL" will be displayed again and the Setup menu will be returned.

Stability Range

Stb

The stability range specifies how much a displayed weight may change while the stability indicator remains ON. When displayed weight changes beyond the allowable range, the stability indicator turns OFF indicating an unstable condition. Precision *Plus* balances permit you to select one of four stability ranges (in divisions) as shown in the table.

STABILITY RANGE	
.5d	**smallest range: stability indicator is ON only when displayed weight is within .5 divisions**
1d	reduced range
2d	normal range
5d	largest range: stability indicator is ON even though displayed weight changes slightly

When the RS-232 interface is configured to print stable data only, the stability range also governs data output. Displayed data will only be output if it is within the selected stability range.

To view or change the stability range:

1. Access the "Stb" submenu to display the current setting.

.5 d

2. Press (MODE) to change the setting.

   Press (ON TARE) to accept the displayed setting.

When (ON TARE) is released, "Stb" will be displayed again and the Setup menu will be returned.

Auto-Zero

Auto-Zero

Auto-Zero minimizes the effects of temperature changes and shift on the zero reading. By defining a threshold level in divisions, the balance maintains the zero display until the threshold is exceeded. This submenu permits you to select one of three threshold levels, or turn the feature OFF. Auto-Zero only functions when the display reads zero.

AUTO ZERO	
OFF	turns Auto-Zero OFF
.5d	**sets threshold to .5 divisions**
1d	sets threshold to 1 division
3d	sets threshold to 3 divisions

To view or change the Auto-Zero setting:

1. Access the "Auto-0" submenu to display the current setting.

.5 d

2. Press (MODE) to change the setting.

   Press (ON TARE) to accept the displayed setting.

When (ON TARE) is released, "Auto-0" will be displayed again and the Setup menu will be returned.

Custom Unit Conversion Factor

CUnit ▸

When you need to display weight measurements in a weighing unit other than those provided standard with the balance, this feature can be used to create your own custom weighing unit. It permits you to enter a conversion factor which the balance will use to convert grams to the desired unit of measure.

Conversion Factor x *Weight in grams* = *Weight in custom unit*

Conversion factors are expressed in scientific notation and entered into the balance in three parts:

- a number between 0.1 and 1.999999 called the mantissa
- a power of 10 called the exponent
- a least significant digit (LSD)

SCIENTIFIC NOTATION

Conv. Factor		Number Between 0.1 and 1.999999		Power of 10		Mantissa		Exp.
123.4	=	.1234	x	1000	=	.1234	x	10^3
12.34	=	.1234	x	100	=	.1234	x	10^2
1.234	=	.1234	x	10	=	.1234	x	10^1
.1234	=	.1234	x	1	=	.1234	x	10^0
.01234	=	.1234	x	.1	=	.1234	x	10^{-1}
.001234	=	.1234	x	.01	=	.1234	x	10^{-2}
.000123	=	.123	x	.001	=	.123	x	10^{-3}

Exponent

Use the following procedure to enter conversion factors:

1. Access the "C.Unit" submenu.

2. The mantissa of the current conversion factor will be displayed. This will be a number between 0.1 and 1.999999 with the first digit flashing.

   NOTE: The number you enter MUST be between 0.1 and 1.999999. For conversion factors outside of this range, the exponent will be be used to move the decimal point.

3. Press (MODE) to change the value of the first digit.

4. When the desired value is displayed, press (ON TARE) to accept it and the next digit will begin flashing.

5. Set the value of all digits in the same manner. If an error is made, you can press (PRINT) to backup to the desired digit and change it.

1.000000

FLASHING

6. After the last digit is entered, the display will show the current exponent. The exponent is shown on the display preceded by the letter "E".

E 0

There are 7 exponent values which you can choose from (see table).

EXPONENTS	
E-3	Moves decimal point 3 places to the left
E-2	Moves decimal point 2 places to the left
E-1	Moves decimal point 1 place to the left
E0	**Leaves decimal point in normal position**
E+1	Moves decimal point 1 place to the right
E+2	Moves decimal point 2 places to the right
E+3	Moves decimal point 3 places to the right

7. Press (MODE) to change the exponent.

8. Press (ON TARE) to accept the displayed exponent.

9. When (ON TARE) is released, the display will show the current least significant digit.

LSd 1

The least significant digit is the digit in the last decimal place on the display. The selection you make causes the balance to count by 1's, 2's or 5's in this position. There are 6 LSD settings you can choose from (see table).

LSD's	
LSD 1	**display counts by 1's**
LSD 2	display counts by 2's
LSD 5	display counts by 5's
LSD 10	display counts by 10's
LSD 100	display counts by 100's
LSD .5*	adds one decimal place display counts by 5's

* Sensitivity to vibration is increased with this LSD setting.

10. Press (MODE) to change the LSD.

11. Press (ON TARE) to accept the displayed LSD.

When (ON TARE) is released, "C.Unit" will be displayed again and the Setup menu will be returned.

Parts Counting Error Level

PC Err PC

The parts counting error level is the level of accuracy you consider acceptable for parts counting results. The adjacent table lists error levels that you can choose from.

EXAMPLE: With 5 Pct selected, 100 parts on the pan may yield a displayed count from 95 to 105 parts.

To view, change or disable the PC Error Level:

ERROR LEVELS	
OFF	**disables error level limits**
.1 %	±0.1% acceptable error
.25 %	±0.25% acceptable error
.5 %	±0.5% acceptable error
1 %	±1.0% acceptable error
2.5 %	±2.5% acceptable error
5 %	±5.0% acceptable error

1. Access the "PC Err" submenu to display the current setting.
2. Press (MODE) to change the setting.

   Press (ON TARE) to accept the displayed setting.

SEt 2.5 %

When (ON TARE) is released, "PC Err" will be displayed again and the Setup menu will be returned.

Parts Counting Alternate Display

PC ALt

In addition to displaying the number of parts, the parts counting feature offers an alternate display mode. Using the "PC ALt" submenu, you can specify the following for the alternate display:

- an alternate unit/mode for displaying weight or quantity of parts (can be any unit/mode the balance offers regardless of which units are enabled in the Unit Selection submenu)

- NET or TOTAL

  NET permits repetitive taring and causes the alternate display to show only the weight of parts added since the last tare.

  TOTAL causes the display to show the total weight or quantity of all parts on the pan. Taring only affects the primary parts count display.

- turn alternate display OFF

To select NET, TOTAL or OFF for the alternate display, use the following procedure:

TOTAL PCS = default setting

1. Access the "PC ALt" submenu to display the current setting.

2. Press (MODE) to change the setting.

   Press (ON TARE) to accept the displayed setting.

tOtAL PC g

nEt PC g

When (ON TARE) is released, "PC ALt" will be displayed again and the Setup menu will be returned.

Percent Weighing Alternate Display

PctALt

In addition to displaying the percentage of material on the pan in relation to a reference, the percent weighing feature offers an alternate display mode. Using the "PctALt" submenu, you can specify the following for the alternate display:

- an alternate unit/mode for displaying weight or percentage of the load (can be any unit/mode the balance offers regardless of which units are enabled in the Unit Selection submenu)

- NET or TOTAL

  NET permits repetitive taring and causes the alternate display to show only the weight of material added since the last tare.

  TOTAL causes the display to show the total weight or percentage of all material on the pan. Taring only affects the primary percentage display.

- turn alternate display OFF

To select NET, TOTAL or OFF for the alternate display, use the following procedure:

TOTAL PCS = default setting

1. Access the "PctALt" submenu to display the current setting.
2. Press (MODE) to change the setting.

   Press (ON TARE) to accept the displayed setting.

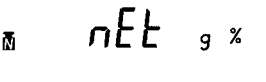

When (ON TARE) is released, "PctALt" will be displayed again and the Setup menu will be returned.

LiSt

L iSt

This submenu can be used to output a listing of the Setup menu's current settings via the RS-232 interface. To use this feature, your balance must be connected to a computer or printer.

To obtain a listing of current settings, simply press (ON TARE) when "LiSt" is displayed in the Setup menu.

End

End

YOU MUST USE "End" to exit the Setup menu. **Changes you make in the Setup menu are only stored in memory if you use "End".**

To exit the Setup menu and store your settings, press (ON TARE) when "End" is displayed.

When (ON TARE) is released, the balance will be returned to normal weighing operations.

Setup Menu Protection

The Setup menu may be "locked-out" to prevent unauthorized personnel from changing settings. To lock out the Setup menu refer to the "MENU LOCK-OUT PROTECTION" section.

PRINT MENU

The Print menu is used to configure the RS-232 interface parameters and customize the balance's print functions for your requirements. The following table shows the sequence in which submenus appear on the Print menu.

PRINT MENU TABLE

** rESEt	sets all submenus below to original factory default settings
bAud	specifies baud rate
dAtA	specifies number of data bits
PAr ,tY	specifies parity type, if any
StoP	specifies number of stop bits
AutoP	enables/disables Auto print feature
* In ,t	specifies time interval for automatic output of displayed data, and/or a range of displayed weight values that cannot be output
StAbLE	enables/disables printing stable-data-only feature
nu	specifies numeric-only or full display data for output
L ,St	enables printing a listing of current Print menu settings
End	used to exit the Print menu and store your selections

* Only appears in Print menu if "AutoP" is enabled.
** Does not appear in menu if menu is locked out.

To access the Print menu press and hold (ON TARE) until "Print" is displayed, then release it.

Pr int

If "SAFE" is displayed, the Print menu has been locked out. Settings may be viewed but not changed. See the "MENU LOCK-OUT PROTECTION" section to enable it for making changes.

To access a submenu:

1. Repeatedly press (MODE) until the desired submenu is displayed.

2. Press (ON TARE) to select the displayed submenu.

NOTE: YOU MUST USE "End" to store any changes you make to the Print menu.

The following sections describe each item on the Print menu in detail.

Reset to Factory Defaults

rESEt

This submenu enables you to reset all RS-232 menu selections to the original factory default settings outlined in the adjacent table.

PRINT MENU FACTORY DEFAULTS	
Baud rate	2400
Data Bits	7
Parity	None
Stop Bits	2
Auto Print	OFF
Auto Print Interval	1 second
Non Print Low Limit	0
Non Print High Limit	0
Stable Data Only	OFF
Numeric Data Only	OFF

To reset to factory defaults:

1. Access the "rESEt" submenu to view the current setting.

2. Press (MODE) to change the setting.

   (Select "yES" to reset settings or, "no" to leave current settings.)

   Press (ON TARE) to accept the displayed setting.

yES

no

Baud Rate

bAud

This submenu is used to select the desired baud rate. There are five available baud rates to choose from: 300, 1200, 2400, 4800 and 9600.

To view or change the baud rate:

1. Access the "bAud" submenu to display the current setting.

br2400 (default setting)

2. Press (MODE) to change the setting.

   Press (ON TARE) to accept the displayed setting.

When (ON TARE) is released "bAud" will be displayed again and the Print menu will be returned.

Data Bits

dAtA

Data Bits, Parity and Stop Bits

The total number of bits for Data, Parity and Stop must equal 9 or 10. (see examples). The balance will not permit you to select a combination that does not equal 9 or 10.

EXAMPLES	
8 Data + 2 Stop + No Parity	= 10
8 Data + 1 Stop + Odd Parity	= 10
7 Data + 1 Stop + Odd Parity	= 9

To set the number of data bits to 7 or 8:

1. Access the "dAtA" submenu to display the current setting.

7 dAtA (default setting)

2. Press (MODE) to change the setting.

   Press (ON TARE) to accept the displayed setting.

8 dAtA

When (ON TARE) is released "dAtA" will be displayed again and the Print menu will be returned.

Parity

PAr ,tY

Parity can be set to Odd, Even, None, or a marker of 0 or 1 as follows:

1. Access the "PAritY" submenu to display the current setting.

2. Press MODE to change the setting. Press ON TARE to accept the displayed setting.

nonE (default setting)

-E-

-Odd-

-1-

-0-

NOTE: If all selections do not appear, total number of data, parity and stop bits is currently < 8 or > 10. Data or stop bits must be changed.

When ON TARE is released "PAritY" will be displayed again and the Print menu will be returned.

Stop Bits

StoP

The number of stop bits can be set to 1 or 2 as follows:

1. Access the "StoP" submenu to display the current setting.

2. Press MODE to change the setting.

3. Press ON TARE to accept the displayed setting.

1 StOP

2 StOP (default setting)

NOTE: If all selections do not appear, total number of data, parity and stop bits is currently < 8 or > 10. Data or parity bits must be changed.

When ON TARE is released "StoP" will be displayed again and the Print menu will be returned.

Auto Print Feature

AutoP

When enabled, the Auto Print feature causes the balance to automatically output display data in one of three ways: continuously, at user-specified time intervals, or upon stability.

To select one of these Auto Print methods, or to turn the feature off:

1. Access the "AutoP" submenu to display the current setting.
2. Press (MODE) to change the setting.

   Press (ON TARE) to accept the displayed setting.

OFF (default setting)

Cont

IntEr

On Stb

When (ON TARE) is released "AutoP" will be displayed again and the Print menu will be returned.

If you select "IntEr" to automatically output data user-specified time intervals, the interval is entered in the "Init" submenu which follows.

Auto Print Time Interval and Non Printing Weight Values

Init

This submenu allows you to:

- specify a time interval (in seconds) for automatic output
- exclude a range of weights from being output, or specify a range for output, by the Auto Print feature.

It does not appear on the Print menu if Auto Print is set to OFF. Use the following procedure to set these features:

1. Access the "Init" submenu.

2. If "IntEr" was selected in the Auto Print submenu, "IntEr" will be displayed and you may continue with step 3.

   If it was not selected, "non-PL" will be displayed. Proceed to step 6.

IntEr

3. To enter a time interval for automatic data output, press (ON TARE) when "IntEr" is displayed.

   The current interval (in seconds) will be displayed.

4. Press (MODE) to increase or (PRINT) to decrease the number.

1 TO 256

Set time interval from 1 to 256 seconds.

5. When the desired number is displayed, press (ON TARE) to accept it.

To enter a range of non printing values:

6. Press (ON TARE) when "non-PL" is displayed.

   The current value for the low end of the range will be displayed with the first digit flashing.

non-PL

000.00

FLASHING

7. To change the number, start with the first digit (flashing).

8. Repeatedly press (MODE) to change the value of the first digit.

   The number may be from -9 to +9. A minus sign will light to indicate a negative number.

To exclude data
WITHIN SELECTED RANGE:
SET non-PL < non-PH

Example: non-PL=7g, non-PH=11g
Values <7 **OR** >11 will be output.

To exclude data
OUTSIDE SELECTED RANGE:
Set non-PL > non-PH

Example: non-PL=11g, non-PH=7g
Values >7 **AND** <11 will be output.

9. When the desired value is displayed, press (ON TARE) to accept it and the next digit will begin flashing.

10. Set the value of all digits in the same manner. If an error is made, you can press PRINT to backup to the desired digit and change it.

11. After the last digit is entered, "non-PH" will be displayed.

non-PH

12. Press (ON TARE) to view the current value for the high end of the range.

13. Change the number as needed using the same procedure as in step 8.

14. After the last digit is entered, "End" will be displayed.

Press (ON TARE) to return to the Print menu.

Print Stable Data Only

StAbLE

When enabled, this feature permits only stable display data to be output. Use this submenu to set the feature ON or OFF as follows:

1. Access the "StAbLE" submenu to display the current status.

2. Press (MODE) to change the status.

   Press (ON TARE) to accept the displayed status.

On

OFF (default setting)

When (ON TARE) is released, "StAbLE" will be displayed again and the Print menu will be returned.

Print Numeric Data Only

nu

This submenu is used to select numeric data only, or full display data for RS-232 output. Set this feature ON to output numeric display data only, or OFF to output full display data as follows:

1. Access the "nu" submenu to display the current status.

   On

2. Press (MODE) to change the status.

   OFF (default setting)

   Press (ON TARE) to accept the displayed status.

When (ON TARE) is released "nu" will be displayed again and the Print menu will be returned.

List

LiSt

This submenu can be used to output a listing of the Print menu's current settings via the RS-232 interface.

To obtain a listing of current settings, simply press (ON TARE) when "LiSt" is displayed in the Print menu.

End

End

YOU MUST USE "End" to exit the Print menu. **Changes you make in the Print menu are only stored in memory if you use "End".**

To exit the Print menu and store your selections, press (ON TARE) when "End" is displayed.The balance will be returned to normal weighing operations.

Print Menu Protection

The Print menu may be "locked-out" to prevent unauthorized personnel from changing settings. To lock out the Print menu refer to the "MENU LOCK-OUT PROTECTION" section which follows.

MENU LOCK-OUT PROTECTION

Access to the Calibration, Setup and Print menus can be disabled by setting the appropriate switches inside the balance. There are two switches: one for the Calibration menu and one for the Setup and Print menu (Setup and Print menus are enabled or disabled together).

Use the following procedure to set the lock-out switches.

1. Disconnect power to the balance.
2. Remove the pan and pan support.
3. Using a philips screwdriver, remove the three screws which secure the cover to the balance. The balance will have to be turned over or on its side to access the screws as they are located on the bottom; two under the front panel and one on the rear (see diagram).
4. Remove the cover.

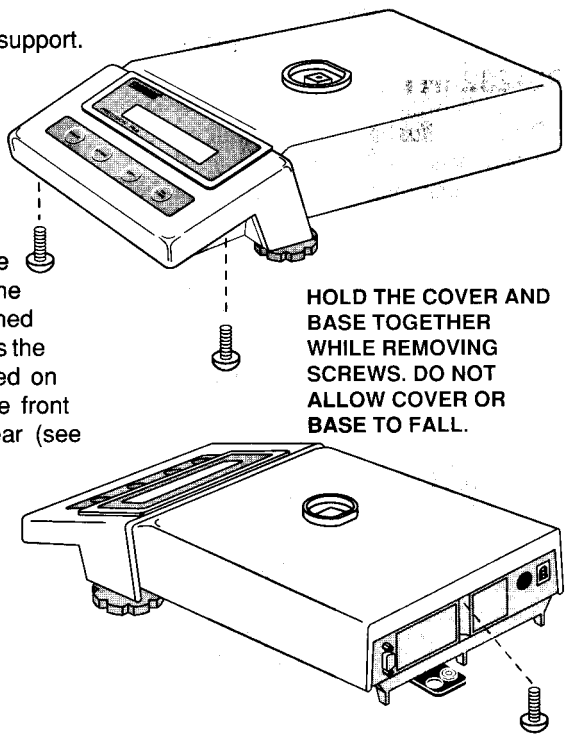

5. Locate the bank of four switches on the main circuit board under the top right portion of the display.

   Switch 3 is used to disable/enable the Calibration menu.

   Switch 4 is used to disable/enable the Setup and Print menus.

6. Set the desired switch to the CLOSED position to lock-out the menu, or to the OPEN position to enable the menu.

7. Replace the cover and fasten the three screws that were removed.

8. Replace the pan and pan support.

9. Reconnect power to the balance.

When menus are disabled, they may still be accessed for viewing but settings may not be changed.

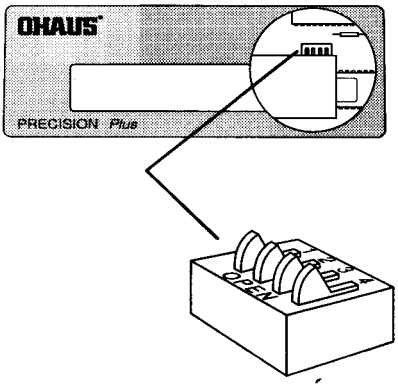

Switches shown in CLOSED position.

RS-232 INTERFACE

Precision *Plus* balances are equipped with a bi-directional RS-232 compatible interface for communication with printers and computers. When the balance is connected directly to a printer, displayed data can be output at any time by simply pressing PRINT, or by using the Auto Print feature.

Connecting the balance to a computer enables you to operate the balance from the computer, as well as receive data such as displayed weight, weighing mode, stability status, etc..

The following sections describe the hardware and software provided with the balance.

Hardware

On the rear of the balance, a 9-pin subminiature "D" connector is provided for interfacing to other devices. The pinout and pin connections are shown in the adjacent illustration.

The balance will not output any data unless pin 5 (CTS) is held in an ON state (+3 to +15 VDC). Interfaces not utilizing the CTS handshake may tie pin 5 to pin 6 to defeat it.

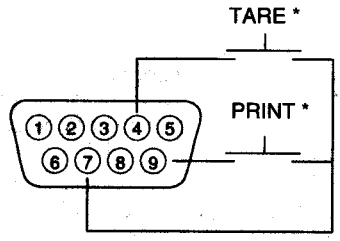

1	5VDC (50 mA max.)
2	Data Out (TXD)
3	Data In (RXD)
4*	Tare (External signal)
5	Clear To Send (CTS)
6	Data Terminal Ready (DTR)
7	Ground
8	Request To Send (RTS)
9*	Print (External signal)

* External PRINT and/or TARE switches may be installed as shown in the diagram. Momentary contact switches must be used.

Output Formats

Data output can be initiated in one of three ways: 1) By pressing PRINT; 2) Using the Auto Print feature; 3) Sending a print command ("P") from a computer.

The output format is illustrated in the RS-232 command table which follows.

RS-232 Commands

All communication is accomplished using standard ASCII format. Only the characters shown in the following table are acknowledged by the balance. Any other commands, control characters or spaces are ignored.

Commands sent to the balance must be terminated with a carriage return (CR) or carriage return-line line feed (CRLF). For example, a tare command should appear as shown in the adjacent diagram. Data output by the balance is always terminated with a carriage return - line feed (CRLF).

TARE COMMAND

Field:	T	CR	LF
Length:	1	1	1

RS-232 COMMAND TABLE

Command Character	Description
?	Print current mode Field: Mode (5) | Stab (1) | CR (1) | LF (1) Stab: blank if stable; " ? " if unstable Mode: GRAMS, GRAIN, LBS, DWT, TAEL1, LB OZ, CARAT, TAEL2, PARTS, OZ AV, TAEL3, CUST, OZ T, MOMME, %
nnnA	Set Auto Print feature to "nnn" (see table). nnn = 0 — Turns feature OFF nnn = S — Output on stability nnn = C — Output is continuous nnn = 1-256 — Sets Auto Print Interval
C	Begin span calibration
xD	Set 1 second print delay (set x = 0 for OFF, or x = 1 for ON)
E	Exit parts counting or percent weighing
xI	Set Averaging Level to "x", where x = 0 to 3 (see table). 0 = minimum level 1 = 2 = 3 = maximum level
L	Begin linearity calibration
M	Same effect as pressing mode button
xM	Places balance in mode "x", where x = 1 to 13 (see table). If unit or mode is not already enabled, command will be ignored. 1 = grams 2 = pennyweight 3 = carats 4 = avoidupois ounces 5 = troy ounces 6 = grains 7 = taels 8 = momme 9 = pounds 10 = pounds:ounces 11 = custom unit 12 = parts counting 13 = percent weighing

Command Character	Description
P	Print display data When "numeric only" display data is selected for output in the RS-232 menu, the Mode field is not output. Field: Weight, space, Mode, Stab, CR, LF Length: 9, 1, 5, 1, 1, 1 Same as ? command Displayed weight sent right justified w/lead zero blanking. Nine characters include: decimal point (1) weight (7 max)) polarity (1): blank if positive " - " if negative
xS	Set stable data only printing (set x = 0 for OFF, or x = 1 for ON).
T	Same effect as pressing tare button
V	Print EPROM version Field: Model #, EPROM #, CR, LF Length: 6, 13, 1, 1 Balance Model 98101-XX VX.X
xZ	Set Auto Zero to "x", where x = 0 to 3 (see table). 0 = OFF 1 = .5 d 2 = 1 d 3 = 3 d
x%	Downloads reference weight "x" for percent mode. "x" must be in grams. Command is ignored if percent mode is disabled. If percent mode is enabled, balance will automatically switch to percent mode display.
x#	Downloads average piece weight "x" for parts counting mode. "x" must be in grams. Command is ignored if parts counting mode is disabled. If parts counting is enabled, balance will automatically switch to parts count display.
Esc L	Prints listing of Setup and Print menu settings.
Esc R	Resets Setup and Print menus to factory defaults. CAUTION: This will reset RS-232 configuration.
Esc S	Save current settings.

TROUBLESHOOTING

SYMPTOM	PROBABLE CAUSE(S)	REMEDY
Unit will not turn on.	Power adapter not plugged in or properly connected to balance.	Check power adapter connections.
Incorrect weight reading.	Balance was not re-zeroed before weighing. Balance not properly calibrated.	Press TARE with no weight on the pan, then weigh item. Recalibrate correctly.
Cannot display weight in desired unit or cannot access desired weighing mode.	Desired unit/mode not set to "ON" in Unit Selection of Setup menu.	See Unit Selection section of Setup menu.
Unable to store menu settings/changes.	"End" not being used to exit menus.	You MUST use "End" to exit menus and save settings.
RS-232 interface not working	Print menu settings not properly set up. Cable connections.	Verify interface settings in Print menu correspond to those of peripheral device. Check cable connections.
Random segments displayed or display locks up.	Microprocessor lock-up.	Turn balance off, then turn on again. If condition persists, unit must be serviced.

Error Codes

2.0 Balance is unable to stabilize within time limit after taring. Environment is too hostile or balance needs recalibration.

3.0 Incorrect or no calibration weight used for calibration. Recalibrate with correct weights.

4.4 RS-232 buffer is full. May occur if no printer or computer is connected to the interface. To clear buffer, turn balance off or enter Print menu and select "End".

7.0 Attempt was made to enter a Non Printing limit or Custom Unit which exceeds the capacity of the balance.

7.1 Insufficient sample size. Occurs in parts counting or percent weighing.

8.0 Hardware error causing an internal weight signal which is too low. Check if pan or pan support is off. If not, balance must be serviced.

8.1 Hardware error causing an internal weight signal which is too high. Have balance serviced.

8.2 Power-on load out of specification: Balance was turned on with load on pan or pan off balance. No load may be on pan when turned on and pan must be in place.

8.3 Overrange error. Load on pan exceeds capacity of balance.

9.7 Invalid setup data checksum. Check Setup and Print menu settings. If possible, try to enter menus and exit using "End" to restore menu settings. May be caused by a faulty component, or in rare cases, a severe static charge. If error persists, balance must be serviced.

9.8 Hardware error causing invalid calibration data checksum. Balance may need recalibration - particularly linearity calibration. If error persists, balance must be serviced.

9.9 Invalid temperature compensation checksum. Balance will work with default temperature compensation data, however, error will occur each time balance is turned on. Have balance serviced.

SPECIFICATIONS

MODEL	TP200S	TP400S	TP400D	TP600S	TP2KS	TP4KS	TP4KD
Capacity (g)	200	400	400/80	600	2000	4000	4000/800
Readability (g)	.001	.01	.01/.001	.01	.01	.1	.1/.01
Weighing Modes	g, lb, oz, lb:oz, ct, dwt, taels, ozt, gn, mommes, 1 custom unit, parts counting, %						
Tare	Full Capacity by Subtraction						
Precision/ Reproducibility (g)	.001	.007	.007/.001	.007	.01	.07	.07/.01
Linearity (g)	.002	.01	.01/.002	.01	.02	.1	.1/.02
Sensitivity Drift (10 - 30 °C)	10ppm/ °C						
Display	.6" LCD						
Stabilization Time	2.5 (sec)						
Operating Temperature	50 - 104°F/10 - 40°C						
Power Supply	AC Adapter - 100, 120, 220, 240 VAC, 50/60 Hz						
Calibration	Pushbutton						
Pan Size (in)	4.75 dia.				6.5W x 6.0D		
(mm)	121 dia.				165W x 152D		
Housing Size (in)	8.5W x 14.0D x 3.75H						
(mm)	216W x 356D x 95H						
Net Weight (lb)/(kg)	9.8/4.4						

CARE AND MAINTENANCE

To keep the balance operating properly, the housing and pan should be kept clean and free from foreign material. If necessary, a cloth dampened with a mild detergent may be used. Keep calibration weights in a safe dry place.

REPLACEMENT PARTS

	OHAUS Part No.
AC Adapters:	
100V	90524-11
120V	90524-10
220V	90524-13
240V	90524-14
Weigh Below Hook	76790-00
Pan - 4.75" dia.	77262-10
Pan - 6.0" x 6.5"	77298-10
Leveling Foot	77253-00
In Service Cover	76901-40
Draft Shield clamping components:	
Clamp	77303-00
Set Screw	G3402-13
Hex Wrench	8983-02

ACCESSORIES

	OHAUS Part No.
Draft Shield Kit Chamber Size: 6.0"W x 6.375"L x 4.25"H	76934-01
Anti Theft Device	76288-00
Calibration Weights:	
40g	49044-01
50g	49054-01
100g	49015-01
200g	49025-01
400g	49045-01
500g	49055-01
1kg	49016-01
2kg	49026-01
4kg	49046-01

LIMITED WARRANTY

Ohaus products are warranted against defects in materials and workmanship from the date of delivery through the duration of the warranty period. During the warranty period Ohaus will repair, or, at its option, replace any component(s) that proves to be defective at no charge, provided that the product is returned, freight prepaid, to Ohaus.

This warranty does not apply if the product has been damaged by accident or misuse, exposed to radioactive or corrosive materials, has foreign material penetrating to the inside of the product, or as a result of service or modification by other than Ohaus. In lieu of a properly returned warranty registration card, the warranty period shall begin on the date of shipment to the authorized dealer. No other express or implied warranty is given by Ohaus Corporation. Ohaus Corporation shall not be liable for any consequential damages.

As warranty legislation differs from state to state and country to country, please contact Ohaus or your local Ohaus dealer for further details.

OHAUS

OHAUS CORPORATION
P.O. Box 900
29 Hanover Road
Florham Park, N.J. 07932
Tel: 201-377-9000
Telex: 6853191 OHAUS UW
Fax: 201-593-0359

OHAUS EUROPE, LTD.
Broad Lane, Cottenham
Cambridge CB4 4SW
ENGLAND
Tel: 0954-51343
Telex: 817285 OSCALE G
Fax: 0954-50205

P/N 77330-01

OHAUS

Instruction Supplement

Entering Non-Printing Limits

PRECISION *Plus* RS-232 INTERFACE USERS!

Refer to Step 5 on page 40 of your Instruction Manual.

After entering a time interval for automatic output, you must press MODE once to proceed to the non printing low limit, "non-PL", or 3 times to proceed to "End".

Refer to Steps 11 through 14 on page 41 of your Instruction Manual.

After entering the last digit of the non-printing low limit, "non-PL" will be displayed again. The balance does not automatically proceed to the non-printing high limit, "non-PH" as stated in the manual.

non-PL

You must press MODE to proceed to the non-printing high limit, "non-PH".

non-PH

After entering the last digit of the non-printing high limit, "non-PH" will be displayed again. The balance does not automatically proceed to "End" as stated in the manual.

non-PH

You must press MODE to proceed to "End".

End

Ohaus Corporation, 29 Hanover Road, P.O. Box 900, Florham Park, NJ 07932

Ohaus Corporation
29 Hanover Road
Florham Park NJ
07932-0900

PRECISION *Plus* Electronic Balances Models TP200, TP400, TP400D, TP600, TP2K, TP4K and TP4KD

Instruction Manual

NOTICE: THIS EQUIPMENT HAS BEEN TESTED AND FOUND TO COMPLY WITH THE LIMITS FOR A CLASS A DIGITAL DEVICE, PURSUANT TO PART 15 OF THE FCC RULES.

THESE LIMITS ARE DESIGNED TO PROVIDE REASONABLE PROTECTION AGAINST HARMFUL INTERFERENCE WHEN THE EQUIPMENT IS OPERATED IN A COMMERCIAL ENVIRONMENT. THIS EQUIPMENT GENERATES, USES, AND CAN RADIATE RADIO FREQUENCY ENERGY AND, IF NOT INSTALLED AND USED IN ACCORDANCE WITH THE INSTRUCTION MANUAL, MAY CAUSE HARMFUL INTERFERENCE TO RADIO COMMUNICATIONS. OPERATION OF THIS EQUIPMENT IN A RESIDENTIAL AREA IS LIKELY TO CAUSE HARMFUL INTERFERENCE IN WHICH CASE THE USER WILL BE REQUIRED TO CORRECT THE INTERFERENCE AT HIS OWN EXPENSE.

THIS DIGITAL APPARATUS DOES NOT EXCEED THE CLASS A LIMITS FOR RADIO NOISE EMISSIONS FROM DIGITAL APPARATUS AS SET OUT IN THE INTERFERENCE-CAUSING EQUIPMENT STANDARD ENTITLED “DIGITAL APPARATUS”, ICES-003 OF THE DEPARTMENT OF COMMUNICATIONS.

CET APPAREIL NUMERIQUE RESPECTE LES LIMITES DE BRUITS RADIOELECTRIQUES APPLICABLES AUX APPAREILS NUMERIQUES DE CLASSE A PRESCRITES DANS LA NORME SUR LE MATERIEL BROUILLEUR : “APPAREILS NUMERIQUES”, NMB-003 EDICTEE PAR LE MINISTRE DES COMMUNICATIONS.

Unauthorized changes or modifications to this equipment are not permitted.

TABLE OF CONTENTS

INTRODUCTION

This manual covers installation, operation and troubleshooting for the Ohaus Precision Plus balances, Models TP200, TP400, TP400D, TP600, TP2K, TP4K and TP4KD. To insure proper operation of the balance, please read this manual completely.

DESCRIPTION

The Ohaus Precision Plus series balances are precision weighing instruments, designed to provide years of service with virtually no maintenance. The Precision Plus series is constructed using a die-cast aluminum base finished with a durable epoxy powder paint which is resistant to commonly used acids, contains a one piece solid-state precision electronics PC board, a seven digit LCD display which is 0.6 inches in height. All Precision Plus series balances are factory set to measure in grams. Each balance operates through a series of menus which enable precise calibration and linearity along with various other parameters which enhances operation. A built in lock switch prevents preset settings from being changed. To prevent measurements from being affected by air currents, a Draft Shield is mounted to the balance and is available for ModelsTP200 and TP400D. Power is supplied through an AC adapter which is available in five voltages for world-wide usage. Accessories include: an RS232 interface kit which allows printing of results through an external computer, an RS232 Interface cable with a print switch, weigh below hook, security device and calibration weights.

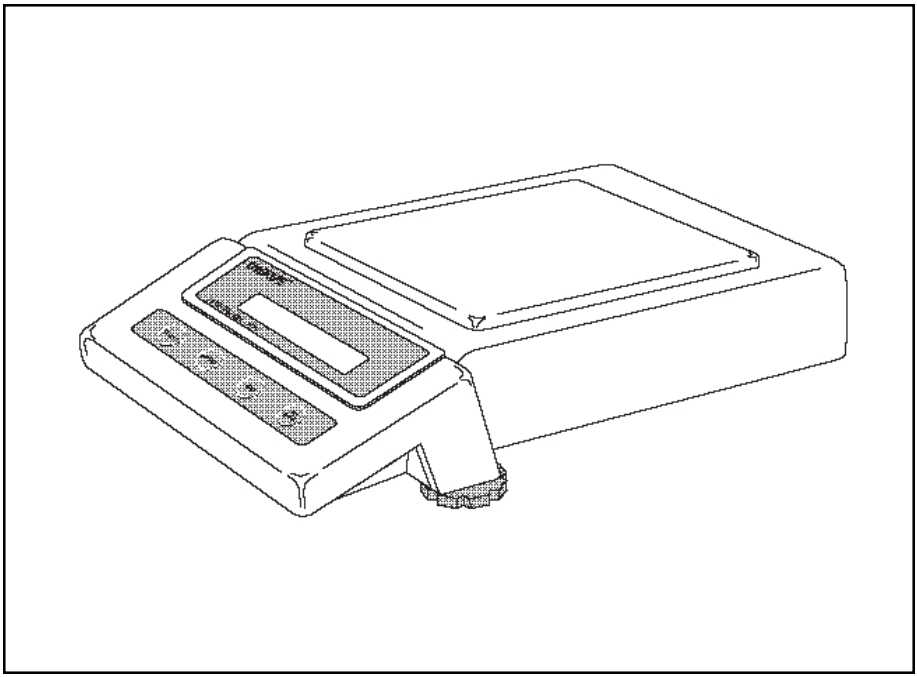

PRECISION *Plus* Balance

UNPACKING

Your Precision Plus balance was shipped with the following items:

- a pan
- a pan support
- an in-service cover
- an AC power adapter
- a weigh below hook
- a draft shield (TP200 and TP400D only) includes draft shield and snap clamp
- this instruction manual
- your warranty card

It is recommended to save the carton and packing material for storing, transporting the balance or returning it for service.

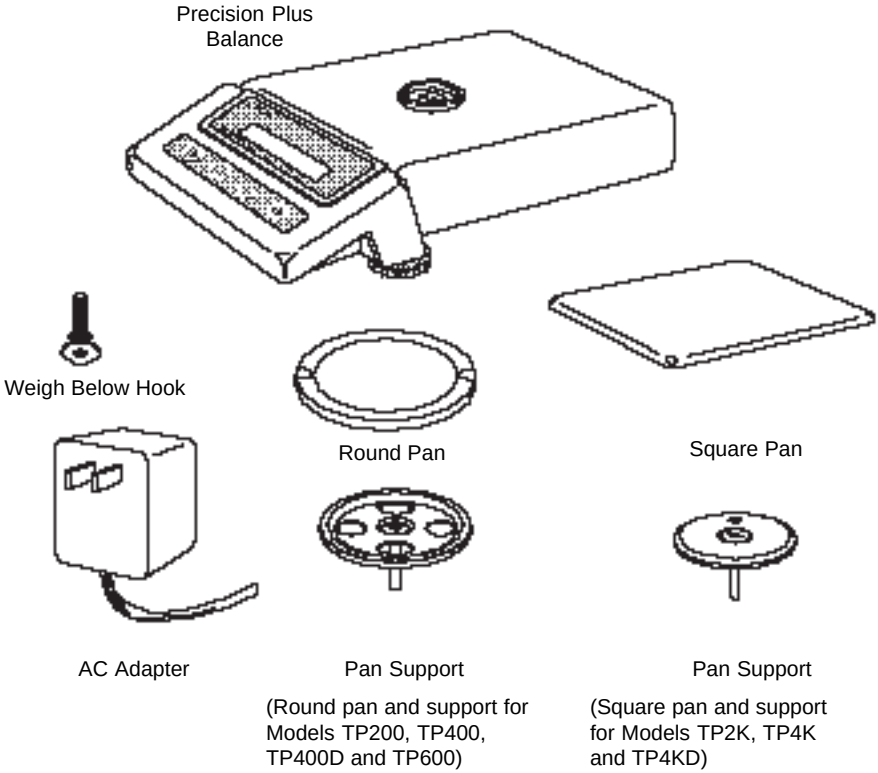

INSTALLATION

Environment

The balance should always be used in an environment which is free from excessive air currents, corrosives, vibration, and temperature or humidity extremes. These factors will affect displayed weight readings.

DO NOT install the balance:

- Next to open windows or doors causing drafts or rapid temperature changes.
- Near air conditioning or heat vents.
- Near vibrating, rotating or reciprocating equipment.
- Near magnetic fields or equipment that generates magnetic fields.
- On an unlevel work surface.

In-Service Cover

The cover is placed on the balance before shipment. If desired, the adhesive pads provided may be used to secure the cover to the balance to avoid possible movement.

Peel the backing off of one side of each adhesive pad and press the pads onto the top of the balance as shown in the diagram.

Remove the backing from the top of the pads, place the cover on the balance and press down on the pads.

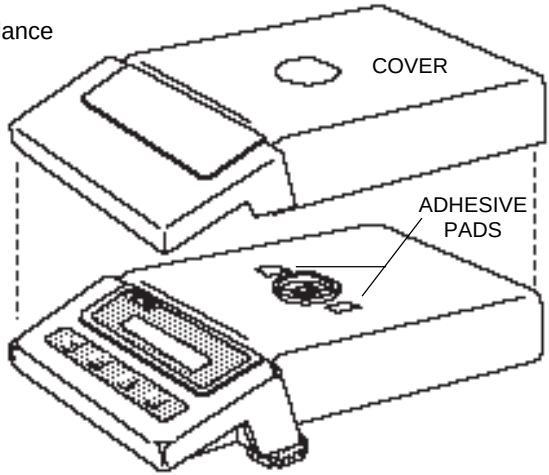

Leveling the Balance

The balance is equipped with a level indicator on the rear and two adjustable leveling feet (see diagram). Adjust the leveling feet until the bubble appears in the center circle of the indicator.

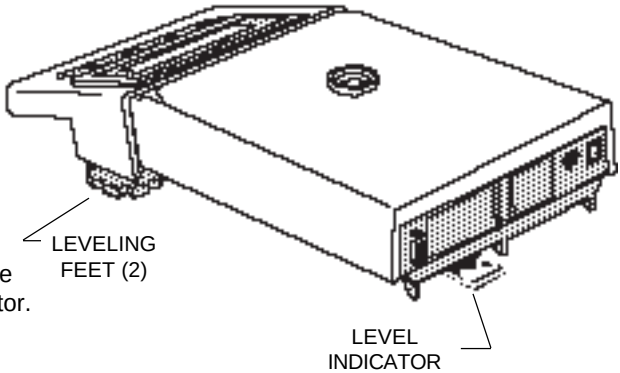

Draft Shield (TP200 and TP400D)

To install the draft shield:

1. Position the draft shield on top of the balance as shown. Make sure the rib at the front of the draft shield base butts up against the raised lip of the display panel.

2. The snap clamp should be oriented so that the double clip is toward the front of the balance.

   Insert the double clip of the snap clamp into the opening in the draft shield base, and clip the draft shield base to the balance. Press the rear clip of the snap clamp into place.

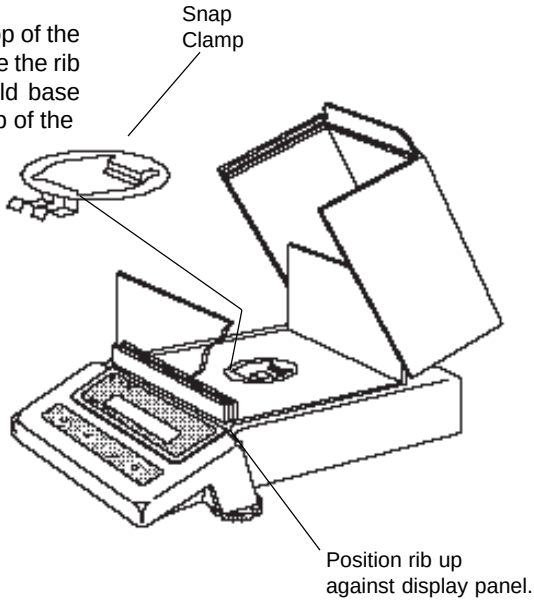

Pan and Pan Support

Square Pan

Insert the pan support into the hole in the weighing mechanism as shown in the illustration. Make sure the hole in the pan support faces the rear of the balance. Once installed, the pan support should not rotate.

The pan has a guide pin which protrudes from the bottom. Place the pan on the support making sure the guide pin is inserted in the hole in the pan support.

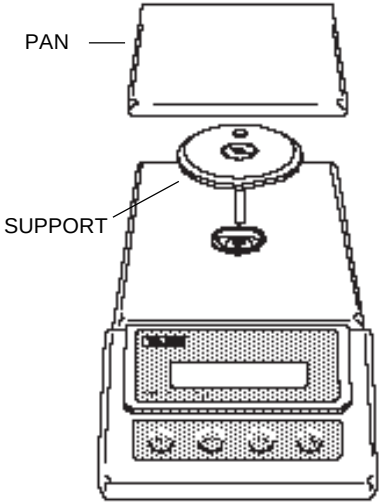

Round Pan

Insert the pan support into the hole in the weighing mechanism.

Place the pan on the support.

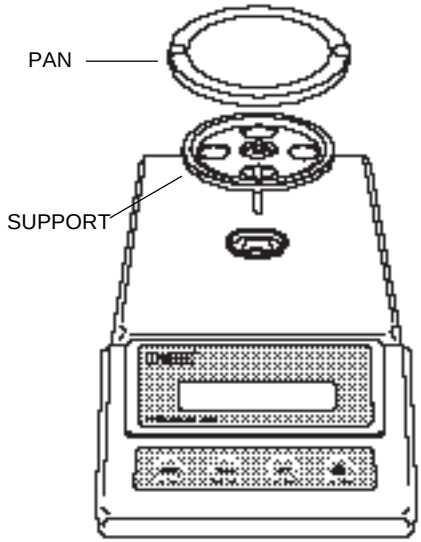

Weigh Below Hook

If the weigh below hook will be used, it may be installed in the bottom of the balance. Simply screw the hook into the threaded hole in the pan support which is visible through the access hole in the bottom of the balance.

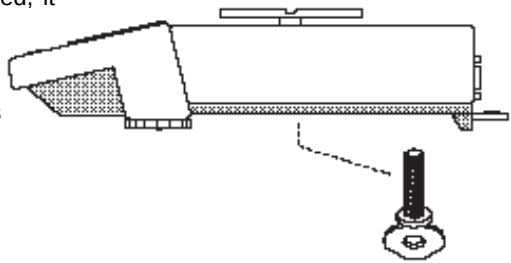

AC Adapter

Plug the molded connector of the adapter into the receptacle at the rear of the balance (see diagram). Plug the adapter into a convenient AC outlet. When power is applied to the balance, it will begin a self test cycle. During this time, the display will count down from 10 and display the word CHEC.

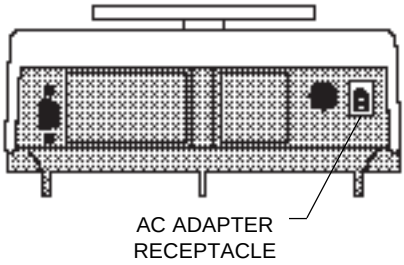

OPERATION

Turning the Balance ON

With no load on the pan, switch the balance ON by pressing the ON TARE button. When first switched ON, all segments of the display should be on as shown in the illustration.

This display check will be displayed briefly, then the model number of the balance followed by a software revision number.

The display will momentarily blank and then indicate zero. The following table describes each of the display indicators.

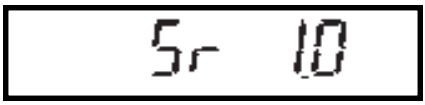

DISPLAY INDICATORS

g	grams	lb	pounds
dwt	pennyweight	lb:oz	pounds:ounces
c	carats	▸	custom unit
oz	avoidupois ounces	PC	parts counting
oz t	troy ounces	%	percent weighing
GN	grains	*	stability indicator
t	taels		net indicator
	mommes		gross (total) indicator

Stabilization

Before initally using the balance, allow time for it to adjust to changes in environment. The balance need only be plugged in to warm up. Recommended warm up period is thirty minutes.

5. To lock out the other menus, press MODE and repeat the procedure in steps 3 and 4.

List

This submenu can be used to output a listing of current menu settings via the RS232 interface. When selected, menu settings for the User, Setup and Print menus will be output. To use this feature, your balance must be connected to a computer or printer.

L ,St

To obtain a listing of current settings, simply press ON TARE when LIST is displayed in the Setup menu.

End

You must use End to exit the Setup menu. **Changes you make in the Setup menu are only stored in memory if you use End.**

End

To exit the Setup menu and store your settings, press ON TARE when END is displayed.

When ON TARE is released, the balance will be returned to normal weighing operations.

Weighing

1. Press ON TARE to rezero the display.

2. Place the object(s) or material to be weighed on the pan.

3. Wait for the stability indicator to appear before reading the weight.

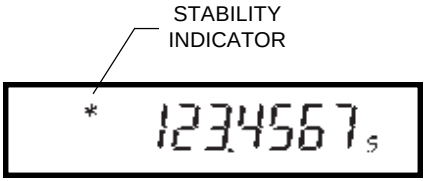

Taring

When weighing material or objects that must be held in a container, taring enables you to store the container weight in the balance's memory, separate from the weight of the material in the container.

1. Place an empty container on the pan. Its weight will be displayed.

2. Press ON TARE .

   The display will show zero and the container's weight will be stored in memory.

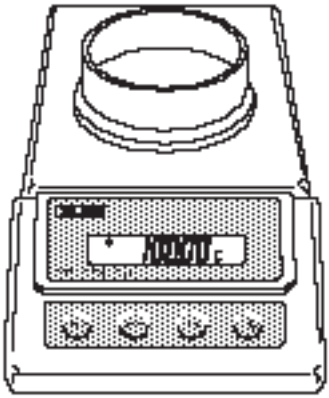

3. Add material to the container. As material is added, its net weight will be displayed.

4. Removing the container and material from the pan will cause the balance to display the container's weight as a negative number.

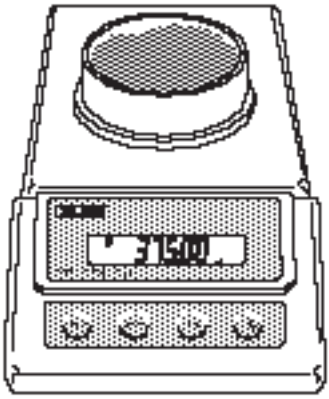

Tared weight remains in balance memory until ON TARE is pressed again.

Parts Counting

NOTE: Parts counting must first be enabled in the Setup menu to use it.

Parts Counting Default Settings
Parts Counting Mode ..... Disabled PC Err ..... OFF PC Alternate Display ..... TOTAL PCS

In the parts counting mode, the balance calculates and displays the quantity of parts you place on the pan. Since the balance determines the quantity based on the average weight of a single part, all parts must be reasonably uniform in weight. The accuracy of parts counting results is determined by the error level entered in PC Err of the Setup menu.

To perform parts counting, use the following procedure:

1. Repeatedly press MODE until PC Con is displayed.

2. Place an empty container on the pan (if one will be used).

3. Press ON TARE .

   NOTE: To exit or restart parts counting at any time: Press and hold ON TARE until PC Con is displayed, then release it. Return to step 2 to restart, or press to exit.

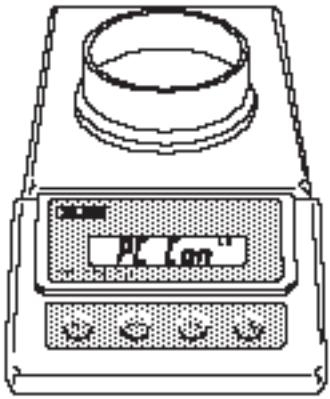

4. Add 5 will be displayed. The balance needs a sample of the parts to use as a reference for counting. The default for the sample size is 5 parts, but this can be changed to 10, 20, 30, 40, 50 or 100 parts. (Larger samples yield more accurate results.)

5. To change the sample size, repeatedly press MODE until the desired quantity is displayed.

6. Add the sample number of pieces to the container.

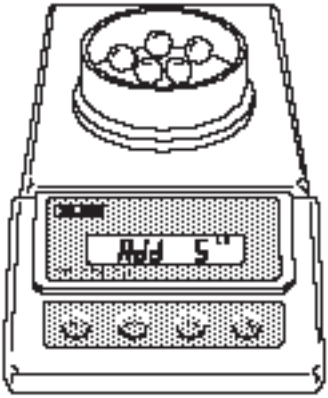

7. Press ON TARE .

If Add X is displayed, the sample is too small to provide results within the selected error level (PC Err of the Setup menu). X represents the number of additional parts needed to provide a sufficient sample.

Add the required number of parts, then press ON TARE again.

8. The balance will calculate the average piece weight based on the net weight of the sample, and then display the current number of parts.

9. Add parts to the container as desired and read the quantity on the display.

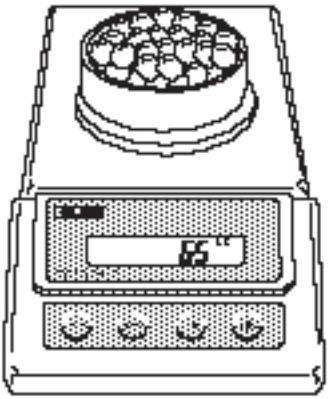

Percent Weighing

Percent weighing permits you to place a reference load on the balance, then view other loads as a percentage of the reference. The load you place on the pan as a reference may be displayed as any percentage you select from 5% to 100% (in 1% increments). One hundred percent does not necessarily have to represent the reference load. Subsequent loads, displayed as a percentage of the reference are limited only by the capacity of the balance.

To perform percent weighing, use the following procedure:

Percent Weighing Default Settings
% Mode ..... Disabled % Alternate Display ..... TOTAL % Reference % 100%

EXAMPLE
A 10g reference load is set for 20%: • A subsequent load of 100 g will be displayed as 200%. • A subsequent load of 200 g will be displayed as 400%.

1. Repeatedly press MODE until PCT CON is displayed.

2. Place an empty container on the pan (if one will be used).

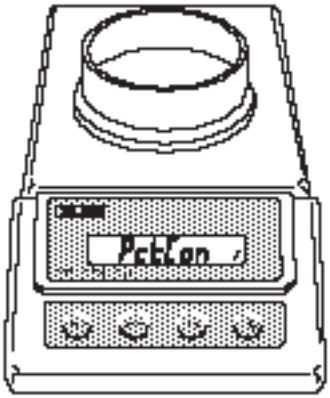

3. Press ON TARE.

4. SEt xxx will be displayed where xxx is the current reference percentage.

5. The reference percentage can be changed to any value from 5 to 100.

   Press MODE to change the value. (Pressing and holding MODE causes the display to increment quickly.)

6. Place the reference load in the container (or directly on the pan if no container is used).

7. Press ON TARE .

8. The display will show the reference load as the percentage you selected.

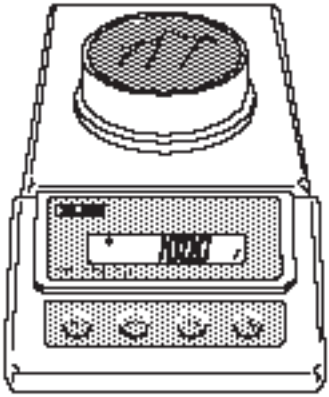

NOTE: To exit or restart percent weighing at any time, press and hold ON TARE until PCT CON is displayed, then release it. Return to step 2 to restart, or press MODE to change to another weighing mode.

9. Remove the reference load from the balance and replace it with another load.

10. The second load will be displayed as a percentage of the reference.

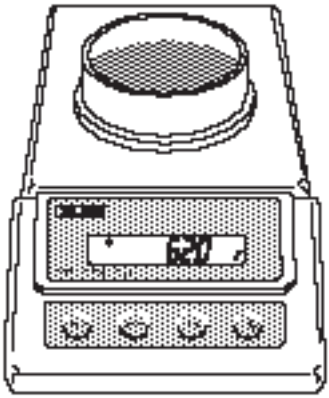

The reference weight may be viewed at any time by pressing and holding PRINT .

To view the weight or gross percentage of the load on the pan, press MODE .

Weight will be displayed in the weighing unit selected in PCTT ALT in the Setup menu.

IF NET has been selected for the alternate display, you may repeatedly tare the balance between weighings. The alternate display will show the net weight of material added since the last tare.

IF TOTAL has been selected for the alternate display, the balance will display the gross weight (relative to weight of container already tared) or percentage of material on the pan. Taring will not affect the alternate display.

NOTE: The primary percentage display always shows the NET percentage.

To switch between the alternate display and the percentage display, repeatedly press MODE .

NOTE: You may change the alternate display unit through the Setup menu without losing the current reference.

To exit or restart percent weighing, press and hold MODE until PCT CON is displayed, then release it. Return to step 2 to restart, or press MODE to change to another weighing mode.

Lights to indicate NET.

Lights to indicate TOTAL or Gross.

Percent Display

Alternate Display

USING MENUS TO CONFIGURE THE BALANCE

Precision Plus balances contain four display menus which enable you to calibrate and configure the balance for your specific operating requirements.

Calibration Menu: Used to calibrate the balance for span or linearity.

User Menu: Used to adapt the balance to environmental conditions.

Setup Menu: Used to enable or disable different balance features.

Print Menu: Used to configure the RS232 interface.

- CAL
  - SPAN
  - LINEARITY
  - END
- USER
  - RESET
  - AL
    0, **1**, 2, 3
  - STABILITY
    .5d, **1d**, 2d, 5d
  - AUTO ZERO
    OFF, **.5d**, 1d, 3d
  - END
- SETUP
  - RESET
  - UNIT SELECTION
    g, dwt, ct, oz, oz t, GN, t, :, lb, lb:oz, cu, PC, %
  - CUSTOM UNIT CONVERSION FACTOR
    - Mantissa
    - Exponent
    - LSD
  - PARTS COUNTING ERROR LEVEL
    OFF, .1, .25, .5, 1, 2.5, 5
  - PARTS COUNTING ALTERNATE DISPLAY
    Total pieces, Net
  - PERCENT WEIGHING ALTERNATE DISPLAY
    Total %, Net
  - LOCK SWITCH
    - Cal
    - User
    - Setup
    - Print
    - End
  - LIST MENU SETTINGS
  - End
- PRINT
  - RESET
  - BAUD
    300, 1200, **2400**, 4800, 9600
  - DATA BITS
    7 or 8
  - PARITY BIT
    Odd, Even, **None**, 1, 0
  - STOP BITS
    1 or **2**
  - AUTO PRINT
    continuous, interval on stability, **OFF**
  - INITIALIZE AUTO PRINT
    Interval, Nonprint Lo, Nonprint Hi
  - STABLE DATA OUTPUT ONLY
    ON or **OFF**
  - NUMERIC DATA OUTPUT ONLY
    ON or **OFF**
  - LIST MENU SETTINGS
  - End

To access a menu, press and hold ON TARE until desired menu appears, then release it.

Original factory default settings are shown in boldface type. Use these buttons to step through menus and select submenus:

PRINT previous selection

MODE next selection

ON TARE select displayed item

CALIBRATION MENU

Precision Plus balances can be calibrated in two ways: Span calibration or Linearity calibration. Span calibration resets the balance's weighing range using two weight values: zero and a weight value at or near the balance's capacity. Linearity calibration minimizes deviation between actual and displayed weights within the balance's weighing range. Three weight values are used: zero, a weight value within the balances weighing range, and a weight value at or near the balance's specified capacity. The following table shows the sequence in which submenus appear on the Calibration menu.

CALIBRATION MENU TABLE

SPAn	Selects span calibration.
L in	Selects linearity calibration.
End	Used to exit the Calibration menu.

Calibration Menu Protection

Calibration may be locked out to prevent unauthorized personnel from changing calibration. To lock out calibration menu, refer to the section titled Menu Lock-Out Protection.

NOTE: If calibration has been locked out, you will not be able to access it.

Calibration Masses

Before beginning calibration, make sure masses are on hand. If you begin calibration and realize masses are not available, either turn the balance off, or go through the procedure without masses. The balance will use previously stored calibration data. Calibration should be performed as necessary to ensure accurate weighing. Masses required to perform the procedures are listed in the adjacent table.

CALIBRATION WEIGHTS

MODEL	LINEARITY MASSES	SPAN ONLY MASS
TP200	100g, 200g	200g
TP400	200g, 400g	400g
TP400D	50g, 400g	400g
TP600	200g, 500g	500g
TP2K	1kg, 2kg	2kg
TP4K	2kg, 4kg	4kg
TP4KD	500g, 4kg	4kg

Masses must meet or exceed ASTM Class 1 Tolerance. Calibration masses are available as accessories.

Span Calibration

1. Press and hold ON TARE until CAL is displayed, then release it. Balance will display SPAN.

2. Press ON TARE .

3. When ON TARE is released, C 0g will be displayed indicating that no weight should be on the pan.

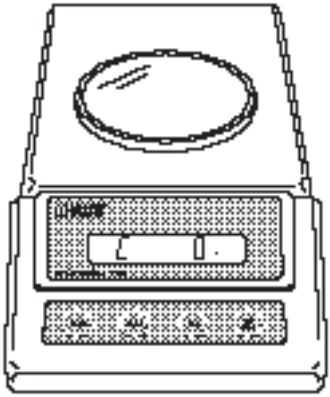

4. Press ON TARE . The display will show -C- followed by the value of the weight which must be placed on the pan.

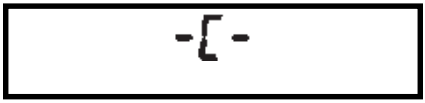

NOTE: Do not disturb the balance when -C- is displayed. Disturbances will result in improper calibration.

5. Place the required weight on the pan and press ON TARE . The display will show -C- while the balance recalibrates.

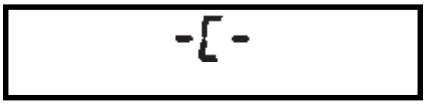

6. When the weight on the pan is displayed along with the current unit indicator, the balance is recalibrated.

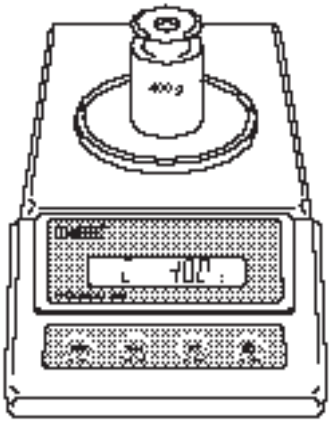

Linearity Calibration

1. Turn Balance on. After zero reading, press and hold ON TARE until CAL is displayed, then release. Balance will display SPAN.

2. Press MODE and the display will show LIN.

3. Press ON TARE to start the Linearity Calibration Procedure. When the ON TARE is released, C 0g will be displayed, indicating that no weight should be in the pan.

4. Press ON TARE. The display will show -C- followed by the value of the weight which must be placed on the pan.

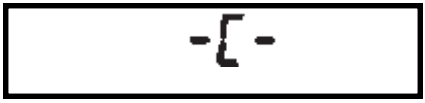

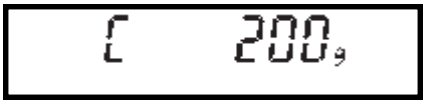

5. Place the required weight on the pan.

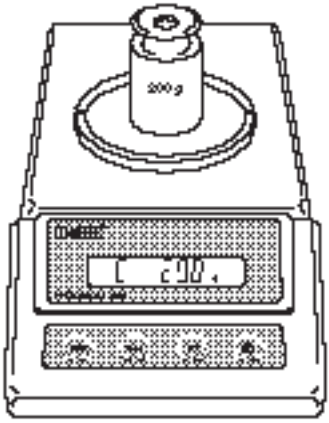

6. Press ON TARE . The display will show -C- momentarily, then C followed by the next weight to be placed on the pan. Do not disturb the balance when -C- is displayed. Disturbances will result in improper calibration.

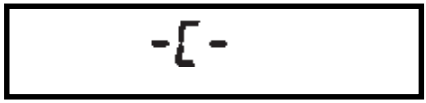

7. Place the required weight on the pan, then press ON TARE . The display will show -C- while the balance recalibrates. When the weight on the pan is displayed along with the current indicator, the balance is recalibrated.

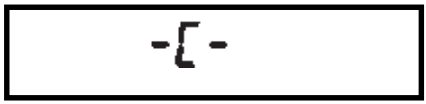

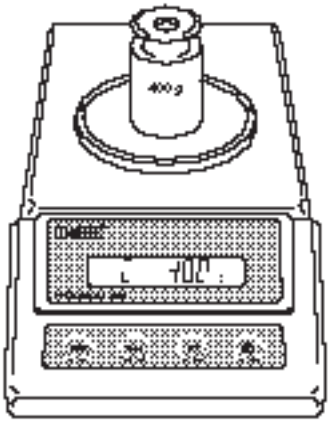

End

If you have entered the Calibration menu and do not wish to calibrate the balance, use END to return to normal weighing operations.

Repeately press MODE until END is displayed.

Press ON TARE, when released, the balance will returned to normal weighing operations.

USER MENU

The User menu is used to adapt the balance to environmental conditions. It contains submenus which enable you to reset the balance to factory default settings or to select specific range settings. Access to the User menu can be disabled using the Lock Out switch. The following table shows the sequence in which submenus appear on the User menu.

USER MENU TABLE

rESEt	Sets all submenus below to original factory default settings. Reset does not appear if menu has been locked out.
AL	Specifies the averaging level.
Stb	Specifies the desired stability range.
Auto-0	Sets Auto-Zero threshold.
End	Used to exit the Setup menu and store your selections.

User Menu Protection

The User menu may be locked out to prevent unauthorized personnel from changing the settings. To lock out the User menu, refer to the section titled Menu Lock-Out Protection.

USEr

NOTE: If -SAFE- is displayed, the User menu has been locked out. Settings may be viewed but not changed. See the Menu Lock-Out Protection section to enable it for making changes.

-SAFE-

To access the User menu, press and hold ON TARE until USER is displayed, then release it.

To access a submenu:

1. Repeatedly press MODE until the desired submenu is displayed.

2. Press ON TARE to select the displayed submenu.

NOTE: You must use END to store any changes you make to the User menu.

The following sections describe each item on the User menu in detail.

Reset to Factory Defaults

This submenu enables you to reset all User menu selections to the factory default settings outlined in the adjacent table.

rESEt

To reset to factory defaults:

1. Access the Reset submenu.

2. Press MODE to change the setting.

   Select YES to reset settings or, no to leave current settings.

   Press ON TARE to accept the displayed setting.

USER MENU FACTORY DEFAULTS	
Averaging Level	AL 1
Stability Range	1d
Auto-Zero Tracking	.5d

YES

no

Averaging Level

Averaging level compensates for vibration or excessive air currents. During operation, the balance continually takes weight readings from the weighing cell. Successive readings are then digitally processed to achieve a stabilized display. Use this submenu to specify how much processing you need to obtain stable results.

NOTE: Averaging level does not affect balance accuracy.

Select one of four averaging levels using the adjacent table as a guide.

To view or change the averaging level:

1. Access the AL submenu to display the current setting.

2. Press MODE to change the setting.

   Press ON TARE to accept the displayed setting.

When ON TARE is released, AL will be displayed again and the Setup menu will be returned.

AL

AVERAGING LEVEL	
AL	0 reduced stability, fastest stabilization time
AL	**1 normal stability, normal stabilization time**
AL	2 more stability, slow stabilization time
AL	3 maximum stability, slowest stabilization time

AL 1

Stability Range

The stability range specifies how much a displayed weight may change while the stability indicator remains ON. When displayed weight changes beyond the allowable range, the stability indicator turns OFF indicating an unstable condition. Precision Plus balances permit you to select one of four stability ranges (in divisions) as shown in the table.

Stb

STABILITY RANGE	
.5d	Smallest range: stability indicator is ON only when displayed weight is within .5 divisions.
1d	**Reduced range.**
2d	Normal range.
5d	Largest range: stability indicator is ON even though displayed weight changes slightly.

When the RS232 interface is configured to print stable data only, the stability range also governs data output. Displayed data will only be output if it is within the selected stability range.

To view or change the stability range:

1. Access the Stb submenu to display the current setting.

2. Press MODE to change the setting.

   Press ON TARE to accept the displayed setting.

1 d

When ON TARE is released, STB will be displayed again and the Setup menu will be returned.

Auto-Zero

Auto-Zero minimizes the effects of temperature changes and shift on the zero reading. By defining a threshold level in divisions, the balance maintains the zero display until the threshold is exceeded. This submenu permits you to select one of three threshold levels, or turn the feature OFF. Auto-Zero only functions when the display reads zero.

Auto-0

To view or change the Auto-Zero setting:

1. Access the Auto-0 submenu to display the current setting.

2. Press MODE to change the setting.

   Press ON TARE to accept the displayed setting.

   When ON TARE is released, Auto-0 will be displayed again and the User menu will be returned.

AUTO ZERO	
OFF	Turns Auto-Zero OFF.
.5d	**Sets threshold to .5 divisions.**
1d	Sets threshold to 1 division.
3d	Sets threshold to 3 divisions.

End

You must use END to exit the User menu. **Changes you make in the User menu are only stored in memory if you use END.** To exit without storing changes, press OFF.

To exit the User menu and store your settings, press ON TARE when END is displayed.

When ON TARE is released, the balance will be returned to normal weighing operations.

SETUP MENU

The Setup menu is used to customize the operation of the balance for your specific requirements. It contains submenus which enable you to turn features on or off, and program balance parameters. The following table shows the sequence in which submenus appear on the Setup menu.

SETUP MENU TABLE

* rESEt	Sets all submenus below to original factory default settings.
SEL	Specifies which weighing units and operating modes will be available during operation.
** CUnit	Enables entering a custom weighing unit.
** PC Err PC	Specifies an allowable percentage of error for parts counting results.
** PC ALt PC	Specifies the weighing unit for parts counting alternate display.
** PctALt %	Specifies the weighing unit for percent weighing alternate display.
LOCSUU	Enables individual or all menus to be locked out.
LiSt	Enables printing a listing of current Setup menu settings.
End	Used to exit the Setup menu and store your selections.

* RESET does not appear in menu if menu has been locked out.

* * CUNIT only appears in menu if custom unit is enabled in SEL submenu.
PC ERR and PC Alt only appear in menu if parts counting is enabled in SEL submenu.
PCTALT only appears in menu if percent weighing is enabled in SEL submenu.

Setup Menu Protection

The Setup menu may be locked out to prevent unauthorized personnel from changing settings. To lock out the Setup menu, refer to the section titled Menu Lock-Out Protection.

SEtUP

NOTE: If -SAFE- is displayed, the Setup menu has been locked out. Settings may be viewed but not changed. See the Menu Lock-Out Protection section to enable it for making changes.

-SAFE-

To access the Setup menu, press and hold ON TARE until SETUP is displayed, then release it.

To access a submenu:

1. Repeatedly press MODE until the desired submenu is displayed.

2. Press ON TARE to select the displayed submenu.

NOTE: You must use END to store any changes you make to the Setup menu.

The following sections describe each item on the Setup menu in detail.

Reset to Factory Defaults

This submenu enables you to reset all Setup menu selections to the factory default settings outlined in the adjacent table.

To reset to factory defaults:

1. Access the Reset submenu.

2. Press MODE to change the setting.

   Select YES to reset settings or, no to leave current settings.

   Press ON TARE to accept the displayed setting.

rESEt

SETUP MENU FACTORY DEFAULTS	
Unit Selection	On g
Conversion Factor	
Mantissa	1.000000
Exponent	0
LSD	1
PC Error Level	OFF
PC Alt. Display	TOTAL PCS
% Alt. Display	TOTAL %

YES

no

Unit Selection

The Unit Selection submenu permits you to specify which weighing units and operating modes will be enabled for use during operation. The adjacent table lists the units and modes available on Precision Plus balances.

SEL

Weighing Units and Modes	
grams	momme
pennyweight	pounds
carats	pounds : ounces
ounces	custom unit
troy ounces	parts counting
grains	percent weighing
taels	

To enable or disable the various weighing units and operating modes, use the following procedure:

1. Access the Sel submenu.

2. The display will show the grams unit indicator (g) along with the current status (ON/OFF).

3. Press MODE to change the status.

   Press ON TARE to accept the displayed status.

   When ON TARE is released, the display will show the next unit indicator along with the current status.

4. Set each unit or mode ON or OFF as in step 3.

On g

OFF g

Taels

If taels are enabled, you will be required to choose one of three different taels: Hong Kong, Singapore, or Taiwan.

When the display shows TAEL 1,

press MODE to change to another tael,

press ON TARE to accept the displayed tael.

When the last weighing unit/mode has been set, the display will show SEL again and the Setup menu will be returned.

tAEL 1

Hong Kong

tAEL 2

Singapore

tAEL 3

Taiwan

Custom Unit Conversion Factor

When you need to display weight measurements in a weighing unit other than those provided standard with the balance, this feature can be used to create your own custom weighing unit. It permits you to enter a conversion factor which the balance will use to convert grams to the desired unit of measure.

Conversion Factor x Weight in grams = Weight in custom unit

Conversion factors are expressed in scientific notation and entered into the balance in three parts:

- a number between 0.1 and 1.999999 called the mantissa
- a power of 10 called the exponent
- a least significant digit (LSD)

SCIENTIFIC NOTATION

Conv. Factor		Number Between 0.1 and 1.999999		Power of 10		Mantissa	Exp.
123.4	=	.1234	x	1000	=	.1234	x 10^{3}
12.34	=	.1234	x	100	=	.1234	x 10^{2}
1.234	=	.1234	x	10	=	.1234	x 10^{1}
.1234	=	.1234	x	1	=	.1234	x 10^{0}
.01234	=	.1234	x	.1	=	.1234	x 10^{-1}
.001234	=	.1234	x	.01	=	.1234	x 10^{-2}
.000123	=	.123	x	.001	=	.123	x 10^{-3}

Exponent

Use the following procedure to enter conversion factors:

1. Access the C Unit submenu.

2. The mantissa of the current conversion factor will be displayed. This will be a number between 0.1 and 1.999999 with the first digit flashing. For conversion factors outside of this range, the exponent will be be used to move the decimal point.

3. Press MODE to change the value of the first digit.

4. When the desired value is displayed, press ON TARE to accept it and the next digit will begin flashing.

5. Set the value of all digits in the same manner. If an error is made, you can press PRINT to backup to the desired digit and change it.

6. After the last digit is entered, the display will show the current exponent. The exponent is shown on the display preceded by the letter E.

There are 7 exponent values which you can choose from (see table).

7. Press MODE to change the exponent.

8. Press ON TARE to accept the displayed exponent.

9. When ON TARE is released, the display will show the current least significant digit.

The least significant digit is the digit in the last decimal place on the display. The selection you make causes the balance to count by 1's, 2's or 5's in this position. There are 6 LSD settings you can choose from (see table).

10. Press MODE to change the LSD.

11. Press ON TARE to accept the displayed LSD.

When ON TARE is released, C Unit will be displayed again and the Setup menu will be returned.

E0

EXPONENTS	
E-3	Moves decimal point 3 places to the left.
E-2	Moves decimal point 2 places to the left.
E-1	Moves decimal point 1 place to the left.
E0	**Leaves decimal point in normal position.**
E1	Moves decimal point 1 place to the right.
E2	Moves decimal point 2 places to the right.
E3	Moves decimal point 3 places to the right.

LSd1

LSD's	
LSD .5*	Adds one decimal place display counts by 5's.
LSD 1	**Display counts by 1's.**
LSD 2	Display counts by 2's.
LSD 5	Display counts by 5's.
LSD 10	Display counts by 10's.
LSD 100	Display counts by 100's.

* Sensitivity to vibration is increased with this LSD setting.

Parts Counting Error Level

The parts counting error level is the level of accuracy you consider acceptable for parts counting results. The adjacent table lists error levels that you can choose from.

PC Err PC

EXAMPLE: With 5 Pct selected, 100 parts on the pan may yield a displayed count from 95 to 105 parts.

ERROR LEVELS	
OFF	**Disables error level limits.**
.1 %	±0.1% acceptable error.
.25 %	±0.25% acceptable error.
.5 %	±0.5% acceptable error.
1 %	±1.0% acceptable error.
2.5 %	±2.5% acceptable error.
5 %	±5.0% acceptable error.

To view, change or disable the PC Error Level:

1. Access the Pc Err submenu to display the current setting.

2. Press MODE to change the setting.

   Press ON TARE to accept the displayed setting.

When ON TARE is released, PC ERR will be displayed again and the Setup menu will be returned.

SEt 2.5 %

Parts Counting Alternate Display

In addition to displaying the number of parts, the parts counting feature offers an alternate display mode. Using the Pc Alt submenu, you can specify the following for the alternate display:

- An alternate unit/mode for displaying weight or quantity of parts (can be any unit/mode the balance offers regardless of which units are enabled in the Unit Selection submenu).

- NET or TOTAL

  NET permits repetitive taring and causes the alternate display to show only the weight of parts added since the last tare.

  TOTAL causes the display to show the total weight or quantity of all parts on the pan. Taring only affects the primary parts count display.

- Turn alternate display OFF.

To select NET, TOTAL or OFF for the alternate display, use the following procedure:

NOTE: TOTAL PIECES = default setting.

Example shows alternate display set for TOTAL grams and NET grams.

1. Access the Pc Alt submenu to display the current setting.

2. Press MODE to change the setting.

   Press ON TARE to accept the displayed setting.

When ON TARE is released, PC ALT will be displayed again and the Setup menu will be returned.

To view the weight or gross number of parts on the pan, press MODE .

Alternate Display

Weight is displayed in the weighing unit selected in PC ALT in the Setup menu.

IF NET has been selected for the alternate display, you may repeatedly tare the balance as needed. The alternate display will show the net weight of parts added since the last tare.

Lights to indicate NET.

IF TOTAL has been selected for the alternate display, total weight or quantity of parts on the pan (relative to weight of container already tared) will be displayed. Taring will not affect the alternate display.

Lights to indicate TOTAL or Gross.

NOTES:

1. The primary parts count display always shows the NET number of parts.
2. Average piece weight is not affected by taring.

To view the average piece weight press and hold PRINT .

Average Piece Weight

To switch between alternate display and parts count display, press MODE .

You may change the alternate display unit through the Setup menu without losing the current average piece weight. To exit or restart parts counting, press and hold ON TARE until PC CON is displayed, then release it. Return to step 2 to restart, or press MODE to change to another operating mode.

Percent Weighing Alternate Display

In addition to displaying the percentage of material on the pan in relation to a reference, the percent weighing feature offers an alternate display mode. Using the Pct Alt submenu, you can specify the following for the alternate display:

PctAlt %

- An alternate unit/mode for displaying weight or percentage of the load (can be any unit/mode the balance offers regardless of which units are enabled in the Unit Selection submenu).

- NET or TOTAL

  NET permits repetitive taring and causes the alternate display to show only the weight of material added since the last tare.

  TOTAL causes the display to show the total weight or percentage of all material on the pan. Taring only affects the primary percentage display.

- Turn alternate display OFF.

To select NET, TOTAL or OFF for the alternate display, use the following procedure:

NOTE: TOTAL % = default setting.

1. Access the Pct Alt submenu to display the current setting.

2. Press MODE to change the setting.

   Press ON TARE to accept the displayed setting.

Example shows alternate display set for TOTAL grams and NET grams.

When ON TARE is released, PCT ALT will be displayed again and the Setup menu will be returned.

Lockswitch

Lockswitch enables you to lockout one or more menu selections. Each menu can be individually locked on or off after all functions have been set. The Calibration, User, Setup and Print menus can be individually locked on or off by selecting the appropriate menu and then locked by the switch located under the right hand side of the control panel. Before performing the lockout procedure, decide which functions of the balance are to be locked on or off.

LOCSW

1. Access the Locksw submenu. When ON TARE is released, the LOCSW submenu is displayed.

2. To access one or more menus, press ON TARE to select the calibration menu, -CAL- is displayed.

   NOTE: Pressing MODE changes the selection to the other menus.

3. To select a YES or NO, press MODE.

   NOTE: The MODE switch acts as a toggle and can select either YES or NO.

YES

no

4. To confirm your selection, press ON TARE again. The display indicates the last menu you were in.

5. To lock out the other menus, press MODE and repeat the procedure in steps 3 and 4.

List

This submenu can be used to output a listing of current menu settings via the RS232 interface. When selected, menu settings for the User, Setup and Print menus will be output. To use this feature, your balance must be connected to a computer or printer.

LiSt

To obtain a listing of current settings, simply press ON TARE when LIST is displayed in the Setup menu.

End

You must use End to exit the Setup menu. **Changes you make in the Setup menu are only stored in memory if you use End.**

End

To exit the Setup menu and store your settings, press ON TARE when END is displayed.

When ON TARE is released, the balance will be returned to normal weighing operations.

PRINT MENU

The Print menu is used to configure the RS232 interface parameters and customize the balance's print functions for your requirements. The following table shows the sequence in which submenus appear on the Print menu.

PRINT MENU TABLE

*rESEt	Sets all submenus below to original factory default settings.
bAud	Specifies baud rate.
dAtA	Specifies number of data bits.
PAr ity	Specifies parity type, if any.
StoP	Specifies number of stop bits.
AutoP	Enables/disables Auto print feature.
** In it	Specifies time interval for automatic output of displayed data, and/or a range of displayed weight values that cannot be output.
StAbLE	Enables/disables printing stable-data-only feature.
nu	Specifies numeric-only or full display data for output.
L ist	Enables printing a listing of current Print menu settings.
End	Used to exit the Print menu and store your selections.

* Does not appear in menu if menu is locked out.
* * Only appears in Print menu if AUTO P is enabled.

Print Menu Protection

The Print menu may be locked out to prevent unauthorized personnel from changing settings.

Pr int

To access the Print menu press and hold ON TARE until PRINT is displayed, then release it.

If SAFE is displayed, the Print menu has been locked out. Settings may be viewed but not changed. See the Menu Lock-Out Protection section to enable it for making changes.

To access a submenu:

1. Repeatedly press MODE until the desired submenu is displayed.

2. Press ON TARE to select the displayed submenu.

NOTE: You must use END to store any changes you make to the Print menu.

The following sections describe each item on the Print menu in detail.

rESEt

Reset to Factory Defaults

This submenu enables you to reset all RS232 menu selections to the original factory default settings outlined in the adjacent table.

PRINT MENU FACTORY DEFAULTS	
Baud rate	br 2400
Data Bits	7 data
Parity	None
Stop Bits	2 stop
Auto Print	OFF
Auto Print Interval	1 second
Non Print Low Limit	0
Non Print High Limit	0
Stable Data Only	OFF
Numeric Data Only	OFF

To reset to factory defaults:

1. Access the Reset submenu to view the current setting.

2. Press MODE to change the setting.

   (Select YES to reset settings or, no to leave current settings.)

   Press ON TARE to accept the displayed setting.

YES

no

Baud Rate

This submenu is used to select the desired baud rate. There are five available baud rates to choose from: 300, 1200, 2400, 4800 and 9600.

bAud

To view or change the baud rate:

br2400

1. Access the Baud submenu to display the current setting.

2. Press MODE to change the setting.

   Press ON TARE to accept the displayed setting.

When ON TARE is released, BAUD will be displayed again and the Print menu will be returned.

Data Bits

The total number of bits for Data, Parity and Stop must equal 9 or 10. (see examples). The balance will not permit you to select a combination that does not equal 9 or 10.

dAtA

To set the number of data bits to 7 or 8:

EXAMPLES	
8 Data + 2 Stop + No Parity	= 10
8 Data + 1 Stop + Odd Parity	= 10
7 Data + 1 Stop + Odd Parity	= 9

1. Access the Data submenu to display the current setting.

2. Press MODE to change the setting.

   Press ON TARE to accept the displayed setting.

7 dAtA

When ON TARE is released, DATA will be displayed again and the Print menu will be returned.

8 dAtA

Parity

Parity can be set to Odd, Even, None, or a marker of 0 or 1 as follows:

1. Access the Parity submenu to display the current setting.
2. Press MODE to change the setting.

   Press ON TARE to accept the displayed setting.

NOTE: If all selections do not appear, total number of data, parity and stop bits is currently < 8 or > 10, data or stop bits must be changed.

When ON TARE is released, PARITY will be displayed again and the Print menu will be returned.

PAr ,tY

nonE

-E-

-Odd-

- 1-

-0-

Stop Bits

The number of stop bits can be set to 1 or 2 as follows:

1. Access the Stop submenu to display the current setting.
2. Press MODE to change the setting.
3. Press ON TARE to accept the displayed setting.

NOTE: If all selections do not appear, total number of data, parity and stop bits is currently < 8 or > 10, data or parity bits must be changed.

When ON TARE is released, STOP will be displayed again and the Print menu will be returned.

StoP

1 StOP

2 StOP

Auto Print Feature

When enabled, the Auto Print feature causes the balance to automatically output display data in one of three ways: continuously, at user specified time intervals, or upon stability.

To select one of these Auto Print methods, or to turn the feature off:

1. Access the Auto P submenu to display the current setting.

2. Press MODE to change the setting.

   Press ON TARE to accept the displayed setting.

When ON TARE is released, Auto P will be displayed again and the Print menu will be returned.

If you select INTER to automatically output data user specified time intervals, the interval is entered in the Init submenu which follows.

AutoP

OFF

Cont

IntEr

On Stb

Auto Print Time Interval and Non Printing Weight Values

This submenu allows you to:

- Specify a time interval (in seconds) for automatic output.
- Exclude a range of weights from being output, or specify a range for output, by the Auto Print feature.

It does not appear on the Print menu if Auto Print is set to OFF. Use the following procedure to set these features:

1. Access the Init submenu.

In it

2. If Inter was selected in the Auto Print submenu, INTER will be displayed and you may continue with step 3. If it was not selected, NON-PL will be displayed. Proceed to step 7.

3. To enter a time interval for automatic data output, press ON TARE when INTER is displayed. The current interval (in seconds) will be displayed.

4. Press MODE to increase or PRINT to decrease the number.

5. When the desired number is displayed, press ON TARE to accept it.

6. Press MODE once to proceed to step 7, or three times to display END and proceed to step 15.

7. To enter a range of non printing values, press ON TARE when NON-PL is displayed. The current value for the low end of the range will be displayed with the first digit flashing.

8. To change the number, start with the first digit (flashing). Repeatedly press MODE to change the value to any number from -9 to +9. A minus sign will light to indicate a negative value.

9. When the desired value is displayed, press ON TARE to accept it and the next digit will begin flashing.

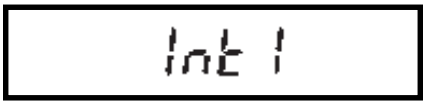

Set time interval from
1 to 256 seconds.

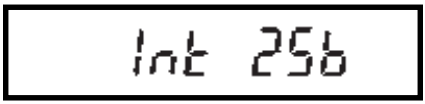

FLASHING

To exclude data
WITHIN SELECTED RANGE:
SET non-PL < non-PH

Example: non-PL=7g, non-PH=11g
Values <7 **OR** >11 will be output.

To exclude data
OUTSIDE SELECTED RANGE:
Set non-PL > non-PH

Example: non-PL=11g, non-PH=7g
Values >7 **AND** <11 will be output.

10. Set all digits in the same manner. If an error is made, press PRINT to backup to the desired digit and change it.

11. After the last digit is entered, NON-PL will be displayed again. Press MODE to proceed to NON-PH, the high limit.

non-PH

12. Press ON TARE to view the current value for the high end of the range.

13. Change the number as needed using the same procedure as in step 8.

14. After the last digit is entered, NON-PH will be displayed again. Press MODE to display End.

15. Press ON TARE when END is displayed to return to the Print menu.

Print Stable Data Only

When enabled, this feature permits only stable display data to be output. To set the feature ON or OFF:

1. Access the Stable submenu to display the current status.

StAbLE

2. Press MODE to change the status.

On

Press ON TARE to accept the displayed status. When ON TARE is released, STABLE will be displayed again and the Print menu will be returned.

OFF

Print Numeric Data Only

This submenu is used to select numeric data only, or full display data for RS232 output. Set this feature ON to output numeric display data only, or OFF to output full display data as follows:

nu

1. Access the Nu submenu to display the current status.

On

2. Press MODE to change the status.

OFF

3. Press ON TARE to accept the displayed status.

When ON TARE is released, NU will be displayed again and the Print menu will be returned.

List

This submenu can be used to output a listing of current menu settings via the RS232 interface. When selected, menu settings for both the Setup and Print menus will be output. To obtain a listing of current settings, press ON TARE when LIST is displayed.

L iSt

End

You must use End to exit the Print menu. **Changes you make in the Print menu are only stored in memory if you use End**

End

To exit the Print menu and store your selections, press ON TARE when END is displayed. The balance will be returned to normal weighing operations.

MENU LOCK-OUT PROTECTION

Access to the Calibration, User, Setup and Print menus, can be disabled using the lock out switch located under the right side of the balance, near the display.

1. Turn the display off and unplug the power cord.

2. Slide the balance toward you, with the front over the edge of a table. (You can also turn the balance on its left side, but if you do, you MUST remove the pan and spill ring first!)

3. Locate hole under display where switch is located.

4. Using a small screwdriver, slide the switch forward for LOCKED or back for UNLOCKED.

5. Plug in the power cord and turn on the balance.

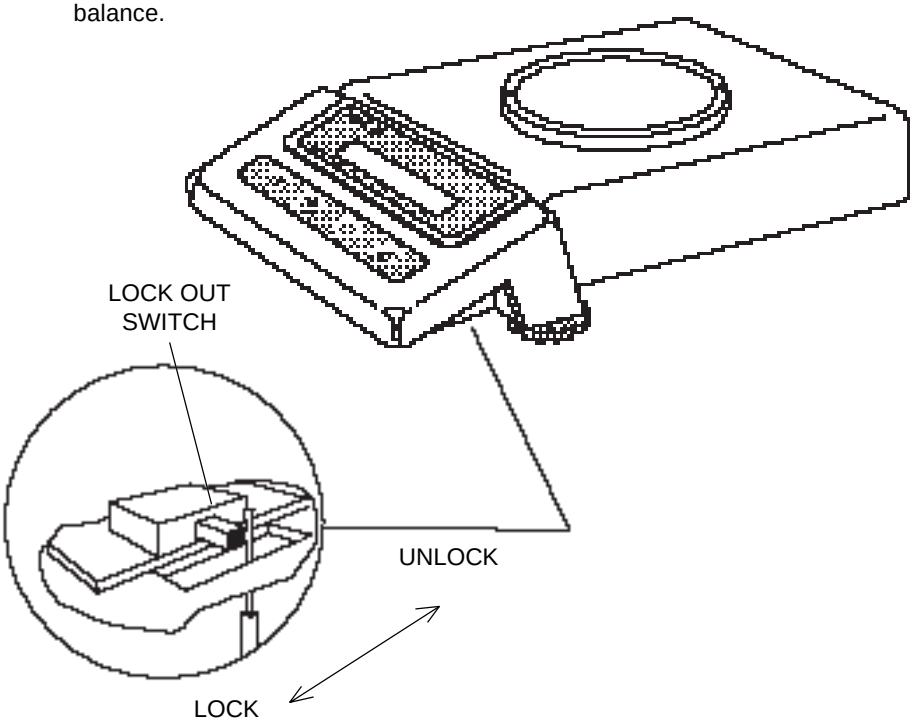

RS232 INTERFACE

Precision Plus balances are equipped with a bi-directional RS232 compatible interface for communication with printers and computers. When the balance is connected directly to a printer, displayed data can be output at any time by simply pressing PRINT, or by using the Auto Print feature.

Connecting the balance to a computer enables you to operate the balance from the computer, as well as receive data such as displayed weight, weighing mode, stability status, etc.

The following sections describe the hardware and output signal formats provided with the balance.

Hardware

On the rear of the balance, a 9-pin subminiature “D” connector is provided for interfacing to other devices. The pinout and pin connections are shown in the adjacent illustration.

The balance will not output any data unless pin 5 (CTS) is held in an ON state (+3 to +15 VDC). Interfaces not utilizing the CTS handshake may tie pin 5 to pin 6 to defeat it.

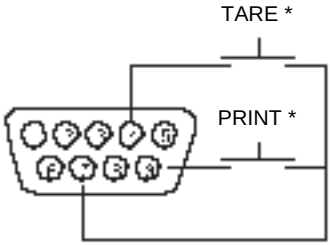

1	5VDC (50 mA max.)
2	Data Out (TXD)
3	Data In (RXD)
4*	Tare (External signal)
5	Clear To Send (CTS)
6	Data Terminal Ready (DTR)
7	Ground
8	Request To Send (RTS)
9*	Print (External signal)

* External PRINT and/or TARE switches may be installed as shown in the diagram. Momentary contact switches must be used.

Output Formats

Data output can be initiated in one of three ways: 1) By pressing PRINT; 2) Using the Auto Print feature; 3) Sending a print command (“P”) from a computer.

The output format is illustrated in the RS232 command table which follows.

RS232 Commands

All communication is accomplished using standard ASCII format. Only the characters shown in the following table are acknowledged by the balance. Any other commands, control characters or spaces are ignored. Commands sent to the balance must be terminated with a carriage return (CR) or carriage return-line line feed (CRLF). For example, a tare command should appear as shown in the adjacent diagram. Data output by the balance is always terminated with a carriage return - line feed (CRLF).

TARE COMMAND

Field:	T	CR	LF
Length:	1	1	1

RS232 COMMAND TABLE

Command Character	Description
?	Print current mode Field: Mode, Stab, CR, LF Length: 5, 1, 1, 1 Stab: blank if stable; " ? " if unstable Mode: Grams, Pennyweight, Carats, Avoidupois ounces, Troy ounces, Grains, Taels, Momme, Pounds, Pounds:ounces, Custom unit, Parts counting, Percent weighing, Error
nnnA	Set Auto Print feature to "nnn" (see table). nnn = 0 — Turns feature OFF nnn = S — Output on stability nnn = C — Output is continuous nnn = 1-256 — Sets Auto Print Interval
C	Begin span calibration
xD	Set 1 second print delay (set x = 0 for OFF, or x = 1 for ON)
E	Exit parts counting or percent weighing
xI	Set Averaging Level to "x", where x = 0 to 3 (see table). 0 = minimum level 1 = 2 = 3 = maximum level
L	Begin linearity calibration
M	Same effect as pressing mode button
xM	Places balance in mode "x", where x = 1 to 13 (see table). If unit or mode is not already enabled, command will be ignored. 1 = grams 2 = pennyweight 3 = carats 4 = avoidupois ounces 5 = troy ounces 6 = grains 7 = taels 8 = momme 9 = pounds 10 = pounds:ounces 11 = custom unit 12 = parts counting 13 = percent weighing

Command Character	Description
P	Print display data When “numeric only” display data is selected for output in the RS232 menu, the Mode field is not output. Field: Weight		Mode	Stab	CR	LF Length: 9	1	5	1	1	1 Same as ? command Displayed weight sent right justified w/lead zero blanking. Nine characters include: decimal point (1) weight (7 max)) polarity (1): blank if positive “ - ” if negative
xS	Set stable data only printing (set x = 0 for OFF, or x = 1 for ON).
T	Same effect as pressing tare button
V	Print EPROM version Field: Model #	EPROM #	CR	LF Length: 7	15	1	1 Balance Model "98101-XX Sr*XX.X"
xZ	Set Auto Zero to “x”, where x = 0 to 3 (see table). 0 = OFF 1 = .5 d 2 = 1 d 3 = 3 d
x%	Downloads reference weight “x” for percent mode. “x” must be in grams. Command is ignored if percent mode is disabled. If percent mode is enabled, balance will automatically switch to percent mode display.
x#	Downloads average piece weight “x” for parts counting mode. “x” must be in grams. Command is ignored if parts counting mode is disabled. If parts counting is enabled, balance will automatically switch to parts count display.
Esc L	Prints listing of Setup and Print menu settings.
Esc R	Resets Setup and Print menus to factory defaults. CAUTION: This will reset RS232 configuration.
Esc S	Save current settings.

CARE AND MAINTENANCE

To keep the balance operating properly, the housing and pan should be kept clean and free from foreign material. If necessary, a cloth dampened with a mild detergent may be used. Keep calibration weights in a safe dry place.

TROUBLESHOOTING

SYMPTOM	PROBABLE CAUSE(S)	REMEDY
Unit will not turn on.	Power adapter not plugged in or properly connected to balance.	Check power adapter connections.
Incorrect weight reading.	Balance was not re-zeroed before weighing. Balance not properly calibrated.	Press TARE with no weight on the pan, then weigh item. Recalibrate correctly.
Cannot display weight in desired unit or cannot access desired weighing mode.	Desired unit/mode not set to ON in Unit Selection of Setup menu.	See Unit Selection section of Setup menu.
Unable to store menu settings/changes.	End not being used to exit menus.	You MUST use End to exit menus and save settings.
RS232 interface not working.	Print menu settings not properly set up. Cable connections.	Verify interface settings in Print menu correspond to those of peripheral device. Check cable connections.
Random segments displayed or display locks up.	Microprocessor locks up.	Turn balance off, then turn on again. If condition persists, unit must be serviced.
Unable to change settings.	Lock set ON.	Set Lock switch to OFF.
Unstable readings.	Vibration on table surface.	Place balance on a stable surface or change averaging level.
Error message display.	———————	See Error Codes Table.

Error Codes

The following list describes the various error codes and which can appear on the display and the suggested remedy.

Data Errors

0.0 Transient error (hardware error, probably static discharge). If error persists, the balance must be serviced.

Tare Errors

2.0 Balance is unable to stabilize within time limit after taring. Environment is too hostile or balance needs recalibration.

2.1 Power on load out of specification.

Calibration Errors

3.0 Incorrect or no calibration weight used for calibration. Recalibrate with correct weights.

RS232 Errors

4.0 Bad RS232 frame. Check RS232 menu parameters and correct.

4.4 RS232 buffer is full (if installed). May occur if no printer or computer is connected to the interface. To clear buffer, turn balance off or enter Print menu and select END.

4.5 Function is disabled by the Lock switch.

User Errors

7.0 User entry out of bounds.

7.1 Bad percent (%) mode, sample too low.

7.2 Number outside of display capacity.

Over-Under Load Errors

8.0 Hardware error causing an internal weight signal which is too low. Check if pan or pan support is off. If not, the balance must be serviced.

8.1 Hardware error caused by an internal weight signal which is too high. Check load on the platform which may be excessive. If error persists, the balance must be serviced.

Error Codes (Cont.)

CheckSum Errors

8.2 Power-on load out of specification: Balance was turned on with load on pan or pan off balance. No load may be on pan when turned on and pan must be in place.

8.3 Rated capacity exceeded. Remove excessive weight from pan.

8.4 Underload condition on balance. Check that the proper pan and pan support are installed.

9.0 Bad factory checksum. If error persists, have the balance serviced.

9.5 Bad factory calibration checksum. If error persists, have the balance serviced.

9.6 Bad mode checksum. Turn the balance off using the front panel controls. If the error persists, have the balance serviced.

9.7 Invalid setup data checksum. Check Setup, User and Print menu (when RS232 is installed) settings. If possible, try to enter menus and exit using END to restore menu settings. May be caused by a faulty component, or in rare cases, a severe static charge. If error persists, balance must be serviced.

9.8 Hardware error causing invalid calibration data checksum. Balance may need recalibration - particularly linearity calibration. If error persists, balance must be serviced.

9.9 Invalid temperature compensation checksum. Balance will work with default temperature compensation data, however, error will occur each time balance is turned on. Have balance serviced.

SERVICE INFORMATION

If the Troubleshooting section does not resolve or describe your problem, you will need to contact an authorized Ohaus Service Agent. For Service assistance in the United States, please call Ohaus Corporation toll-free at (800) 526-0659, an Ohaus Product Service Specialist will be available to help you.

SPECIFICATIONS

MODEL	TP200	TP400	TP400D	TP600	TP2K	TP4K	TP4KD
Capacity (g)	200	400	80/400	600	2000	4000	800/4000
Readability (g)	0.001	0.01	0.001/0.01	0.01	0.01	0.1	0.01/0.1
Weighing modes	g, lb, oz, lb:oz, ct, dwt, taels, ozt, gn, mommes, 1 custom unit, parts counting, %						
Repeatability (std. dev.) (g)	0.001	0.007	0.007/0.001	0.007	0.01	0.07	0.07/.01
Linearity (g)	±0.002	±0.01	±0.001/0.01	±0.01	±0.02	±0.1	±0.02/0.1
Tare range	Full Capacity by Subtraction						
Stabilization time	2.5 (sec)						
Sensitivity drift	10ppm/ °C						
Operating temperature	50° to 104°F/10° to 40°C						
Calibration	Pushbutton						
Display (in/cm)	LCD (0.6/1.5 high)						
Power requirements	AC Adapter - 100, 120, 220, 240 VAC, 50/60 Hz						
Platform size (in/cm)	4.75/12.1 diameter				6.0 x 6.5/15.2 x 16.5		
Dimensions (WxHxD) (in/cm)	8.5 x 3.75 x 14/21.6 x 9.5 x 35.6						
Net Weight (lb/kg)	9.8/4.4						

PARTS INFORMATION

If you require replacement parts or would like to purchase accessories, please call Ohaus Corporation toll-free at (800) 526-0659, an Ohaus Product Parts Specialist will be available to help you.

REPLACEMENT PARTS

Description	Ohaus Part No.
AC Adapters:	
100V	90524-11
120V	90524-10
220V	90524-13
240V	90524-14
Weigh Below Hook	76790-00
Pan - 4.75” dia.	77262-10
Pan - 6.0” x 6.5”	77298-10
Leveling Foot	77253-00
In Service Cover	78211-02
Draft Shield Snap Clamp (Model TP200 and TP400D)	77334-00

ACCESSORIES

Description	Ohaus Part No.
Cable for RS232 Interface	AS017-20
Draft Shield Kit	76934-03
Chamber Size: 6”W x 4.25”H x 6.37”D	
Security Device	76288-01
Calibration Masses - ASTM Class 1 Tolerance:	
50g	49054-11
100g	49015-11
200g	49025-11
400g	49045-11
500g	49055-11
1kg	49016-11
2kg	49026-11
4kg	49046-11

LIMITED WARRANTY

Ohaus products are warranted against defects in materials and workmanship from the date of delivery through the duration of the warranty period. During the warranty period Ohaus will repair, or, at its option, replace any component(s) that proves to be defective at no charge, provided that the product is returned, freight prepaid, to Ohaus.

This warranty does not apply if the product has been damaged by accident or misuse, exposed to radioactive or corrosive materials, has foreign material penetrating to the inside of the product, or as a result of service or modification by other than Ohaus. In lieu of a properly returned warranty registration card, the warranty period shall begin on the date of shipment to the authorized dealer. No other express or implied warranty is given by Ohaus Corporation. Ohaus Corporation shall not be liable for any consequential damages.

As warranty legislation differs from state to state and country to country, please contact Ohaus or your local Ohaus dealer for further details.

Ohaus Corporation
29 Hanover Road,
Florham Park, NJ 07932, USA
Tel: (973) 377-9000,
Fax: (973) 593-0359

With offices worldwide.

P/N 77330-03 R1295

Ohaus Corporation
29 Hanover Road
Florham Park NJ
07932-0900

The pages you are about to view are for an accessory which is no longer available

June 8, 2000

Yarn Count Replacement Integrated Circuit

~~P/N 98101-13~~

OBSOLETE, NO LONGER AVAILABLE

For PRECISION *Plus*

Electronic Balances

Instruction Supplement

WARNING

BEFORE BEGINNING, DISCONNECT POWER TO THE BALANCE. FAILURE TO DISCONNECT POWER TO THE BALANCE MAY RESULT IN **ELECTRICAL SHOCK, PERSONAL INJURY**, OR DAMAGE TO THE BALANCE.

CAUTION

THE EPROM IS SENSITIVE TO STATIC CHARGE AND MUST BE HANDLED PROPERLY. FAILURE TO DO SO MAY RESULT IN DAMAGE TO THE EPROM.

EPROM Removal and Replacement

A medium phillips screwdriver and a small flat bladed screwdriver will be required.

1. Remove the pan and pan support.

2. If the balance is equipped with a draft shield, remove it.

3. Using a phillips screwdriver, remove the three screws which secure the cover to the balance. The balance will have to be turned over or on its side to access the screws as they are located on the bottom; two under the front panel and one on the rear (see diagram).

4. Turn the balance right side up and remove the cover.

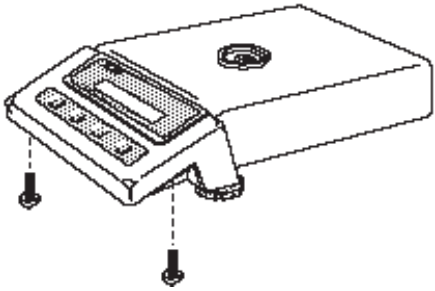

Hold cover and base together while removing screws. DO NOT allow cover or base to fall.

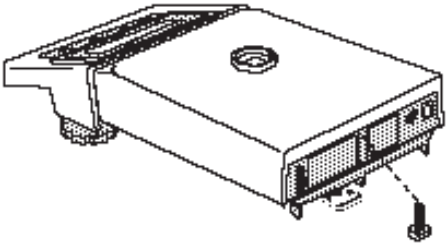

5. Locate the EPROM (U14) on the printed circuit board.

6. Remove the EPROM from its socket. If necessary, insert the flat bladed screwdriver under the edge of the EPROM and carefully pry it out of the socket.

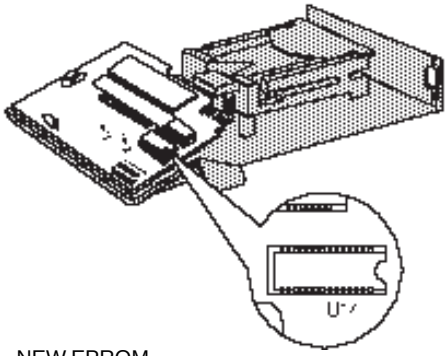

7. Position the new EPROM over the socket as shown in the diagram. Make sure the notch on the end of the EPROM is aligned with the notch on the socket.

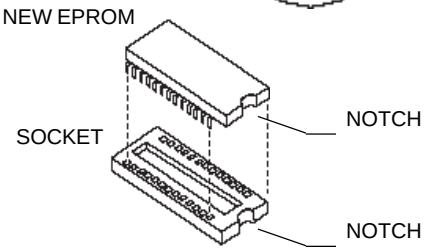

8. Gently press the EPROM into the socket making sure all pins enter the socket.

   If the pins on the new EPROM are spread too wide to easily fit into the socket, bend all pins on one side at the same time against a table top or other flat surface. Repeat this for the pins on the other side.

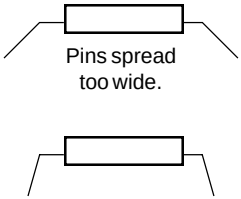

9. Replace the cover and fasten the three screws that were removed.

10. Replace pan and pan support.

11. Reconnect power to the balance, turn it on and allow it to warm up for at least ten minutes.

12. Calibrate the balance following the procedure outlined in the instruction manual.

OPERATION

With the EPROM installed, the weighing units and modes shown in the adjacent table will be avaliable. The units shown in boldface type (**tex**, **denier** and **yarn count**) are added with the new EPROM.

MODE or UNIT	DISPLAY INDICATOR
grams	g
pennyweight	dwt
carats	c
ounces	oz
troy ounces	ozt
grains	GN
tex	**t**
denier	**:**
pound	lb
yarn count	**k**
custom unit	▶
parts counting	PC
percent weighing	%

TEX: On TP balances, Tex is based on a 100 meter sample. Since Tex is defined as the weight (in grams) of a 1,000 meter sample, the balance displays the weight of a 100 meter sample times 10.

DENIER: On TP balances, Denier is based on a 90 meter sample. Since Denier is defined as the weight (in grams) of a 9,000 meter sample, the balance displays the weight of a 90 meter sample times 100.

YARN COUNT: In the Yarn Count mode, the balance will display "- - C - -" when no load is on the pan. The adjacent table shows the balance resolution in Yarn Count mode.

Yarn Count			Resolution
0	-	99	3 decimal places
100	-	999	2 decimal places
1,000	-	9,999	1 decimal place
10,000	-	and up	0 decimal places

YARN COUNT = 1,000/Weight in Grains

OHAUS

OHAUS CORPORATION
P.O. Box 900
29 Hanover Road
Florham Park, N.J. 07932
Tel: 201-377-9000
Telex: 6853191 OHAUS UW
Fax: 201-593-0359

OHAUS EUROPE, LTD.
Broad Lane, Cottenham
Cambridge CB4 4SW
ENGLAND
Tel: 0954-51343
Telex: 817285 OSCALE G
Fax: 0954-50205

P/N 77448-01