REVISIONS							
NO.	SHT.	ZONE	DESCRIPTION	BY.	CKD.	APPR.	DATE
1			ADDED ROW, CUSTOMER EQUIP.#, LENGTH DIM. & ABOUT FIN. 5-21-86 D.W.B.				
2		D-7	RELOCATED DRIVE	JAB			10-1-86
3			ADDED ITEMS 7 THRU 19	RMO			1-19-87

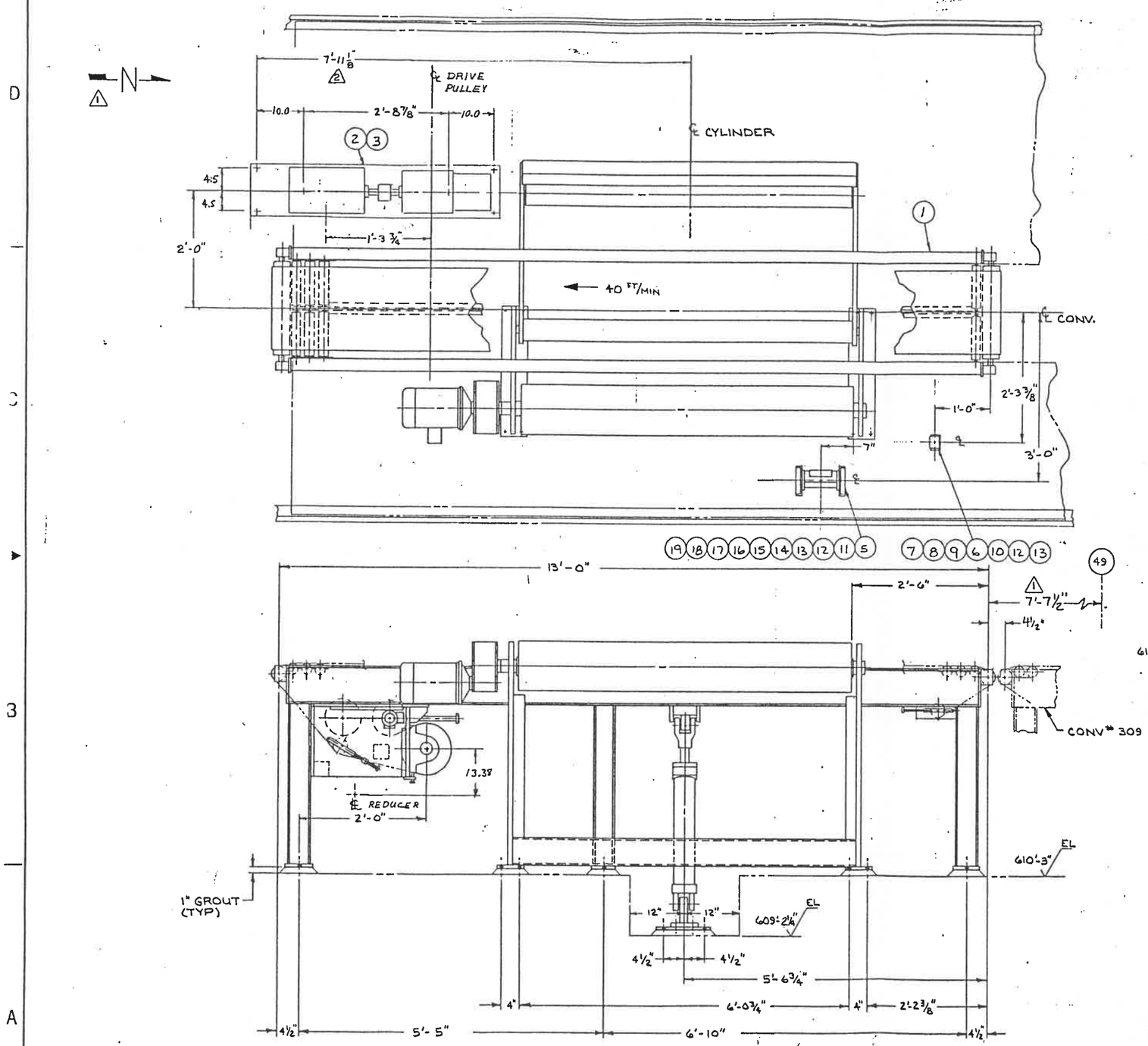

TECHNICAL DATA:

BELT CONVEYOR:
MOTOR - 1 1/2 HP, 1200 RPM, TEFC, FRAME 182T c/w
10 FT LB STEARNS BRAKE
REDUCER - DAVID BROWN NO. AU 400
ITEM 310B

LABEL SENSOR:
MOTOR - 3 HP, 1750 RPM, c/w 10 FT LB STEARNS BRAKE
REDUCER - BOSTON HELICAL GEAR DRIVE
FLANGED REDUCER SHAFT MTD # F-239-D-24-C9
ITEM 310A

CUSTOMER: LAKE SUPERIOR PAPER CO.
CUSTOMER P.O. # 2780-126
WAM S.O. # 81010
WAM ITEM# 310A & 310B
CUSTOMER EQUIPMENT # 09-4-4200
09-4-4205

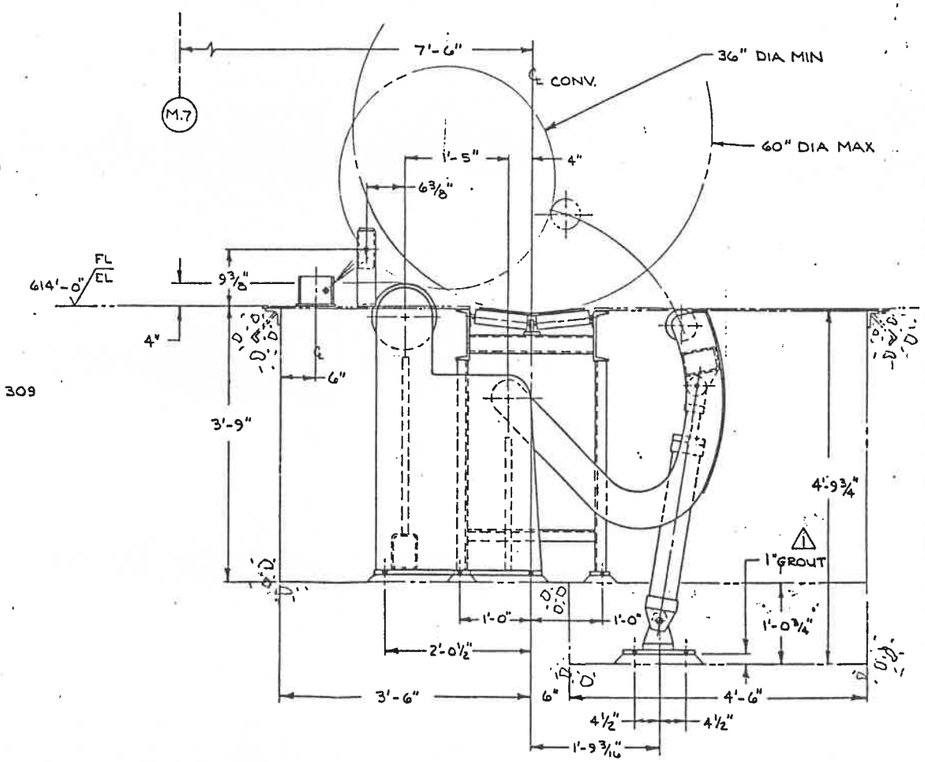

NEXT ASSY	USED ON	TOLERANCES UNLESS OTHERWISE SPECIFIED .X ± .030 .XX ± .015 .XXX ± .005 WELDMENTS ± .06 CHAMFERS .06 X 45° ANGLES ± 1° BREAK ALL SHARP EDGES	DRAWN	D.W.B.	5-21-86
APPLICATION			CHECKED		
SUPERSEDED	SUPERSEDES	MATERIAL	APPROVED		

WARTSILA-APPLETON, INC.
Wärtsilä Paper Finishing Systems

LABEL SENSOR c/w BELT CONV.
GENERAL ARRANGEMENT

DIV. 1

SIZE | CODE IDENT. NO. 70433 | DRAWING NO. 1310000680 | REV.

SCALE 1" = 1'-0" | EST. WEIGHT | LBS | SHEET 1 OF 1

REFERENCE