LOADINGS (LBS)					
PAD	DEAD LOAD	LIVE LOADS/PAD COMP	TENS	SHEAR	DIR
A	2800	2000	2000	1300	→
B	2600	5000	600	1300	→
C	2400	5000	—	1300	→
D	1400	5000	—	—	
E	1400	5000	—	—	
F	1400	5000	—	—	
G	1400	5000	—	—	
H	2400	5000	—	1300	←
J	2600	5000	600	1300	←
K	2800	2000	2000	1300	←
L	1300	1000	—	5200	←
M	1300	—	3200	5200	←

REVISIONS							
NO.	SHT.	ZONE	DESCRIPTION	BY.	CKD.	APPR.	DATE
1			ADDED DIM 2'-3" 7'-0" 3'-10" 14'-0" 5'-0" 6 CONV. 2'-10" 2'-2" 5'-0" 5'-3" 2'-8" 5'-0" 1½" 12" 5¾" 12" 15" 5'-0" 10'-0" 5" 10" 3½" TYP 7" TYP 2'-0" 5'-0" 6'-3" 4'-0" 46 1 N-7 7 6 14'-0" EL 1'-9⅛" SAFETY HOOD LIMIT SWITCH 609'-0" EL 3'-10½" 2 C 1" GROUT TYP 5 7" TYP ¾" TYP 3 B 4'-5" 3'-3" 2'-0" 5'-0" 1'-0⅛" 5'-0" 1 A 8 12" TAKE-UP 1" 3'-6" 14'-4" 21'-9" 7'-0" 10'-3" 58'-7" 50'-1" ℄ TO ℄ SPROCKETS 36'-1" 7'-0" 5'-0" ℄ TAIL SHAFT ℄ HEAD SHAFT ROLL FLOW 614'-0⅛" EL 614'-0" EL FL EL ℄ CUSHION #131 ℄ KICKER #132 3/16" TYP 3'-10½" 10 10 PAD 'M' PAD 'L' PAD 'J' PAD 'K' ℄ CONV.	DWB			8/20/86
1			DIM 5'-0" WAS 5'-3" 2'-2" WAS 2'-8" 5'-0" WAS 5'-3" 1½" WAS 2½" 12" WAS 12" 5¾" WAS 5¾" 15" WAS 15" 5'-0" WAS 5'-0" 10'-0" WAS 10'-0" 5" WAS 5" 10" WAS 10" 3½" WAS 3½" 7" WAS 7" 2'-0" WAS 2'-0" 5'-0" WAS 5'-0" 6'-3" WAS 6'-3" 4'-0" WAS 4'-0" 46 1 N-7 7 6 14'-0" EL 1'-9⅛" SAFETY HOOD LIMIT SWITCH 609'-0" EL 3'-10½" 2 C 1" GROUT TYP 5 7" TYP ¾" TYP 3 B 4'-5" 3'-3" 2'-0" 5'-0" 1'-0⅛" 5'-0" 1 A 8 12" TAKE-UP 1" 3'-6" 14'-4" 21'-9" 7'-0" 10'-3" 58'-7" 50'-1" ℄ TO ℄ SPROCKETS 36'-1" 7'-0" 5'-0" ℄ TAIL SHAFT ℄ HEAD SHAFT ROLL FLOW 614'-0⅛" EL 614'-0" EL ℄ CUSHION #131 ℄ KICKER #132 3/16" TYP 3'-10½" 10 10 PAD 'M' PAD 'L' PAD 'J' PAD 'K' ℄ CONV.				
1			ADDED LOADINGS				
2			(20-1) 8⅝" WAS 14"-(-3) 14'-4" WAS 14'-0"	RMO			9/12/86
3		C-B	3'-6" WAS 5'-0"	RMO			9/17/86
4			21-9, 50-7, 11½ 21'-9" WERE 22-1, 60-1, 9¾ 21'-5⅞"	ITEMS Nos ADDED	MM		1/8/87
5			COUPLING WAS 50T41				1/27/87

...26... ANCHOR BOLTS 3/4" 3" PROJECTION ABOVE FLOOR ELEVATION WITH 2" MINIMUM THREAD LENGTH. (TYPICAL WHEN 1" GROUT USED).

NOTE: 1. FLOOR PLATE BY WAM

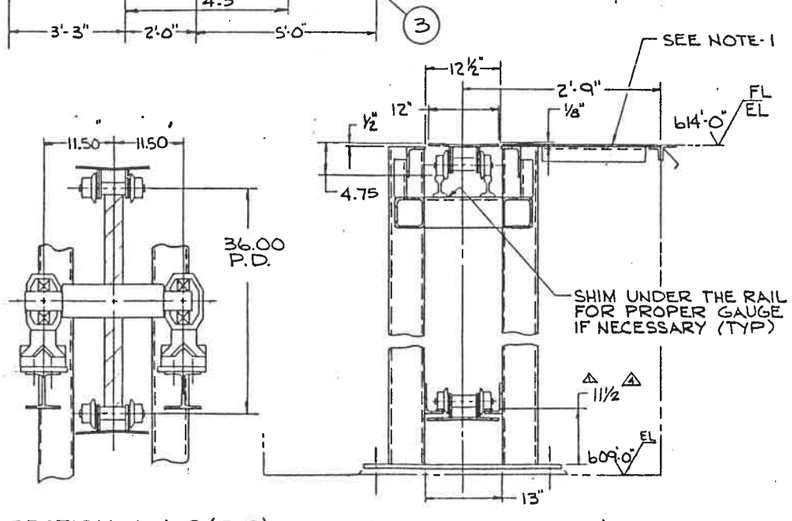

SECTION A-A @ (B-8)
SCALE : 1" = 1'-0"

SECTION B-B @ (B-6)
SCALE : 1" = 1'-0"

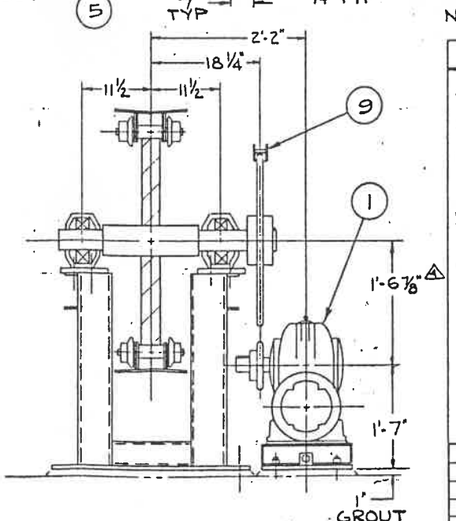

SECTION C-C @ (B-1)
SCALE : 1" = 1'-0"

TECHNICAL DATA

CAPACITY: 40,000 LBS MAX

SPEED: 40 F.P.M.

MOTOR: 5HP-1200RPM-FRAME 215T
460 V. 3PH 60HZ

REDUCER: DAVID BROWN REDUCER AU800
RATIO 70:1

COUPLING: FALK # 50T41

SPROCKETS: DRIVE- ASA 140-1 16T 20T
DRIVEN- ASA 140-1 60T

CHAIN: ASA RC 140-1

ACTUAL

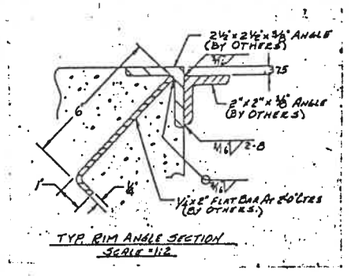

TYP. RIM ANGLE SECTION
SCALE = 1:2

CUSTOMER: LAKE SUPERIOR PAPER CO.
CUSTOMER P.O. # 2780-126
WAM S.O. # 81010
WAM ITEM # 130
CUSTOMER EQUIPT # 09-4-2101-501

NEXT ASSY.	USED ON		
APPLICATION			
SUPERSEDED	SUPERSEDES		

TOLERANCES UNLESS OTHERWISE SPECIFIED
.X ± .030
.XX ± .015
.XXX ± .005
WELDMENTS ± .05
CHAMFERS .06 X 45°
ANGLES ± 1°
BREAK ALL SHARP EDGES
MATERIAL

DRAWN	RMO	7/18/86
CHECKED	MM	12/23/86
APPROVED		

WARTSILA-APPLETON, INC.
Wärtsilä Paper Finishing Systems

STL SLAT CONVEYOR G.A. # 130

DIV. 1

SIZE	CODE IDENT. NO.	DRAWING NO.	REV.
1	70433	1320002031	

SCALE ½" = 1'-0" EST. WEIGHT LBS SHEET 1 OF 1

REFERENCE