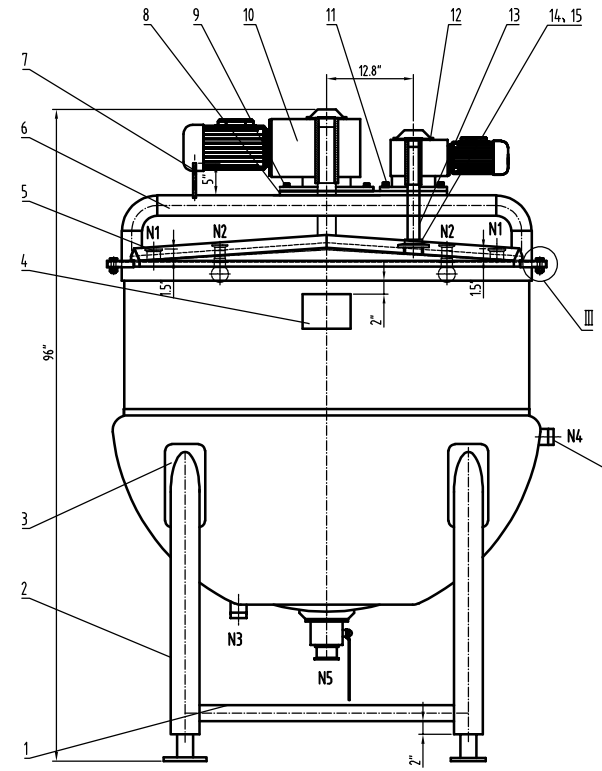

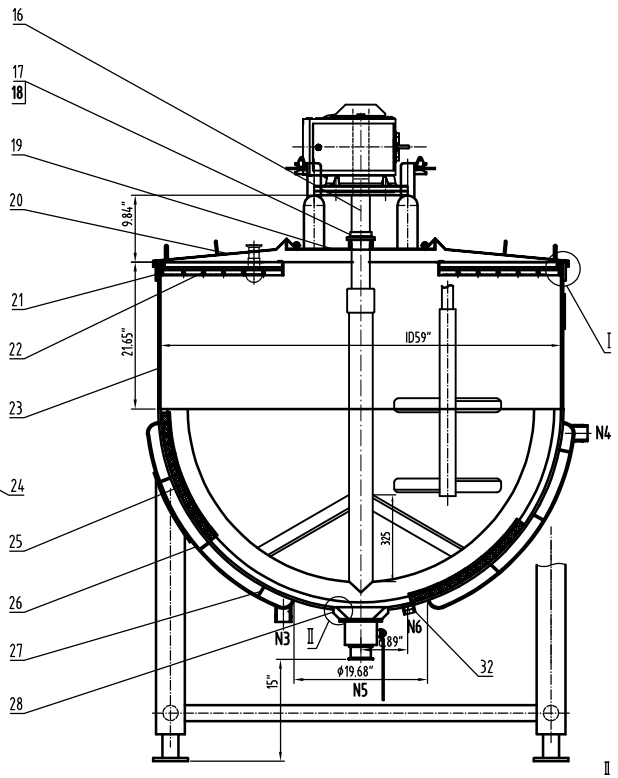

A B类焊接接头
Category A,B welding joint

不按比例 Not to scale

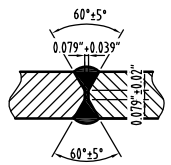

接管焊接接头
nozzle welding joint

不按比例 Not to scale

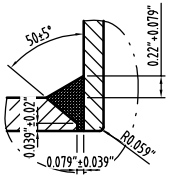

夹套焊接接头
jacketed welding joint

不按比例 Not to scale

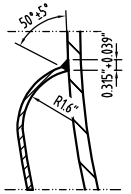

Ⅲ DETAIL 详图

NOT TO SCALE不按比例

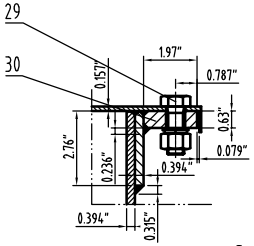

Ⅰ DETAIL 详图

不按比例 Not to scale

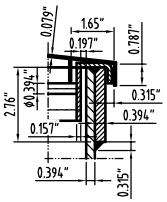

Ⅱ DETAIL 详图

不按比例 Not to scale

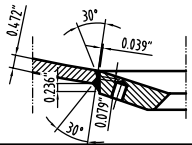

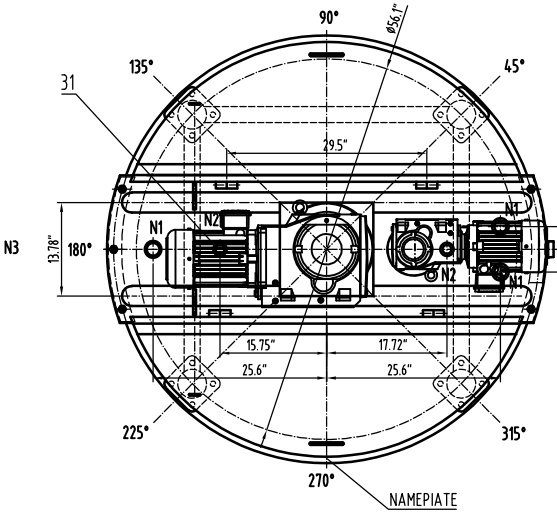

技术要求

Technical Requirement

1.被充金属符合SFA-5.9，含碳量不超过0.10%。Having a carbon content not exceeding 0.10% and produced with filler metals conforming to sfa-5.9.

2.除非另有说明，所有坡口型压焊接接头外侧为全焊透接头形式，连续焊，并应采用焊缝评测卡（JIC)上指定的WPS施焊；完工的纵、环向焊接接头符合UW-35的要求。Unless otherwise specified,all the groove welding joints for pressure parts are of full penetration type, continuous, and shall be welded as per the wps designated by jic; Finished longitudinal and circumferential joints conform to UW-35.

3.除非另有说明，未注明的尺寸公差见程序文件Q/HD-PD-03-2011.

Unless otherwise specified, does not indicate the size tolerance and see the program file Q/HD-PD-03-2011.

4.内侧抛光:RA 0.8,外抛 RA 0.8。Interior finish : Ra0.8,Exterior finish: Ra0.8,

5.安全泄放装置由用户负责安装在外部管路中，以确保容器内的压力不会超过容器的最大允许工作压力。

The user shall be in charge for installing safety devices in outer pipe system connected to this tank, and to ensure the pressure in the tank not exceeding its MAWP pressure;

6.本设备的包装运输按JB4711-2003《压力容器涂敷与运输包装》的规定。

This equipment's packing and transportation shall conform to the regulation of [Pressure Vessel Coating and Transportation Packing],JB4711-2003.

DESIGN DATA SHEET 设 计 数 据 表

CODE 规范	ASME BPVC SECTION VIII DIUISION I 2023 EDITION. ASME<<锅炉及压力容器规范>>第VIII卷第一册<<压力容器建造规则>>,2023版.				
	SHELL 筒体	JACKET 夹套	ASME STAMP ASME钢印要求		YES,WITH U DESIGNATOR FOR JACKET ONLY
FLUID 介质		STEAM 水蒸气	NB REGISTRATION REQUIREMENTS NB注册要求		YES
FLUID PERFORMANCE 介质特性	Non lethal 非致死	Non lethal 非致死	CRN REGISTRATION REQUIREMENTS CRN注册要求		NO
WORKING TEMPERATURE 工作温度 *F	329	329	WELDING ROD TYPE 焊条型号		AS PER WPS 按焊接工艺规定
WORKING PRESSURE 工作压力 psi	0	87	WELDING REGULATION 焊接规程		NOTE 2
DESIGN TEMPERATURE 设计温度 *F	330	330	WELD STRUCTURE 焊缝结构		COMPRESSION STRUCTURE ADOPTS FULL PENETRATION 受压部件采用全焊透结构
MDMT 最低设计金属温度 *F	-4	-4°F AT 90psi	THICKNESS OF FILLET WELD EXCEPT NOTED 除注明外角焊缝厚度		AS PER THE THICKNESS OF THINNER PLATE 按较薄板厚度
DESIGN PRESSURE 设计压力 psi	0	90psi AT 330°F	PRESSURE TEST TEMPERATURE 压力试验温度 *F		41-118
MAWP 最大允许工作压力 psi	0	90psi AT 330°F	N.D.E. 无损检测	WELDING JOINT CATEGORY 焊接接头类别	METHOD-EXTRATE 方法-延展率 / ACC. STD. 验收标准
CORROSION ALLOWANCE 腐蚀裕量 in	0			A,B	射线抽查 SPOT RT UW-11(b) / UW-52
JOINT EFFICIENCY Shell/ head 焊接接头系数 筒体/封头	0.85/0.85			C,D	/ /
HYDRO. TEST PRESSURE 水压试验压力 psi	119		TOTAL CAPACITY 全容积 U.S.gal		485
GAS LEAKAGE TEST PRESSURE 气密性试验压力 psi	NA		IMPACT TEST 冲击试验		Exemped per UHA-51 豁UHA-51免检
NOZZLE ORIENTATION 管口方位	AS PER THIS DRAWNING 按本图		HEAT TREATMENT 热处理		Exemped per UHA-32, UHA-44 豁UHA-32, UHA-44免检
MATERIAL FOR MAIN PRESSURE PARTS 主要受压部件材料	SA-240 304 SA-240 316L SA-312 TP304		质量 MASS	NET MASS FOR EQUIP. 设备净质量 ibm	2845
FULL COEFFICIENT 充满系数	/			OPERATING MASS 操作质量 ibm	/
INSULATION THICKNESS 保温层厚度 in	/			FULL WATER MASS 充满水质量 ibm	/

NOZZLE SCHEDULE 管 口 表

MARK 标号	NOMINAL SIZE 公称尺寸	QTY. 数量	CONNECTING SIZE AND STANDARD 连接尺寸及标准	FACE 连接面形式	SERVICE 用途或名称	REMARKS 备 注
N1	2"	3	3A	TC	FEED INLET	
N2	3"	1	/	FLAT	OUTLET	
N3	2"	1	ASME B1.20.1-2013	2"NPT	STEAM OUTLET	
N4	2"	1	ASME B1.20.1-2013	2"NPT	STEAM INLET	
N5	1.5"	2	3A	TC	CIP	
N6	1 1/4"	1		UNC	Temperature sensor	

PART NUMBER 件号	DWG. NO. OR STD NO 图号或标准号	DESIGNATION 名 称	QTY 数量	MATERIAL 材 料			SINGLE 单 / TOTAL 总 WEIGHT 重量 (ibm)	REMARKS 备 注
32	HD25A-022-07	Temperature sensor 温度传感器	1	S31603				
31		CIP 喷洗15"X2.5"	2	S31603				N2
30	HD25A-022-06	PLATE 钢板 t=0.55"	2	S30408				
29	GB/T5783	BOLT 螺栓 M16X1.77"	6	A2-70				配带垫圈和弹簧垫圈
28		valve 出口阀门3"	1	SA-240 316L				N5
27		GUIDE PLATE 导流板 t=0.157"	1	SA-240 304				
26		SPHERICAL HEAD JACKET 夹套椭球封头ID63"X0.236"(0.21")	1	SA-240 304				
25		SPHERICAL HEAD 椭球封头ID59"X0.472"(0.433")	1	SA-240 316L				
24	HD25A-022-05	JOINT 2"NPT 接头2"NPT φ2.374x0.218"	2	SA-312 TP304				N3, N4
23		SHELL 筒体ID59"X0.393"/L=21.65"	1	SA-240 316L				
22	HD25A-022-04	SAFETY GRATE 安全栅网	2	S31603				
21		REINFORCING RING 加强圈ID59.84"X0.393" L=2.75"	1	SA-240 304				
20	HD25A-022-03	LID 盖子 t=0.08"	2	S30408				
19		BRIDGE 桥 t=0.157"	1	S31603				
18	GB/T3452.1	O-RING SEALS O型密封圈 内径2.72"X0.2"	1	SILICONE RUBBER 硅橡胶				
17		OIL SEAL COVER 护油盖φ2.75"	1	PTFE 聚四氟乙烯				
16		MIXING SYSTEM 搅拌系统	1	ASSEMBLY 组合件				
15	GB/T3452.1	O-RING SEALS O型密封圈 内径1.73"X0.2"	1	SILICONE RUBBER 硅橡胶				
14		OIL SEAL COVER 护油盖φ1.77"	1	PTFE 聚四氟乙烯				
13		MIXING SYSTEM 搅拌系统	1	ASSEMBLY 组合件				
12		REDUCER 减速机KAF57	1	ASSEMBLY 组合件				4HP,65rpm
11	GB/T5783	BOLT 螺栓 M12X1.57"	4	A2-70				配带垫圈和弹簧垫圈
10		REDUCER 减速机KAF87	1	ASSEMBLY 组合件				7.5HP,26rpm
9	GB/T5783	BOLT 螺栓 M16X1.77"	4	A2-70				配带垫圈和弹簧垫圈
8		ENGINE BASE FLANGE 机座法兰24.6"X13.78"X0.63"	1	S30408				
7		COVER LOCK 盖锁	2	S30408				
6		LINTEL 过梁 φ3"X0.236"	2	S30408				
5		FERRULE 卡箍接头2"/L=1.75"	3	316L				N1
4	HD25A-022-02	NAMEPIATE 铭牌 t=0.08"	1	SA-240 304				
3		PLATE 支撑板板11.8"X6.7" t=0.236"	4	SA-240 304				
2		SUPPORTING PIPE 支撑管φ2.36"X0.157"/L=36.1"	3	S30408				
1	HD25A-022-01	ADJUSTABLE LEGS 调节支腿 φ4.25"X0.236"	4	S30408				

REV.NO. 修改号	DESCRIPTION 说 明	PREPARED BY 设 计	CHECKED BY 审 核	APPROVED BY 批 准	DATE 日 期
3					
2					
1					

陕西宏达实业有限公司
SHAANXI HONGDA INDUSTRY CO., LTD

PREPARED BY 设 计		400USG SPHERICAL TANK 400加仑球形锅	PROCESS STAGE 加工阶段
CHECKED BY 审 核			DRAWING NO. 图 号: HD25A-022-00
APPROVED BY 批 准			PROJECT NUMBER 设计项目: 25-0519-03-HA
		SCALE 比 例 1:10 / WEIGHT 重量(ibm)	GENERAL DRAWING 总 图
			REV 版次: 0 / TOTAL 共: 26 / PAGE 第: 1