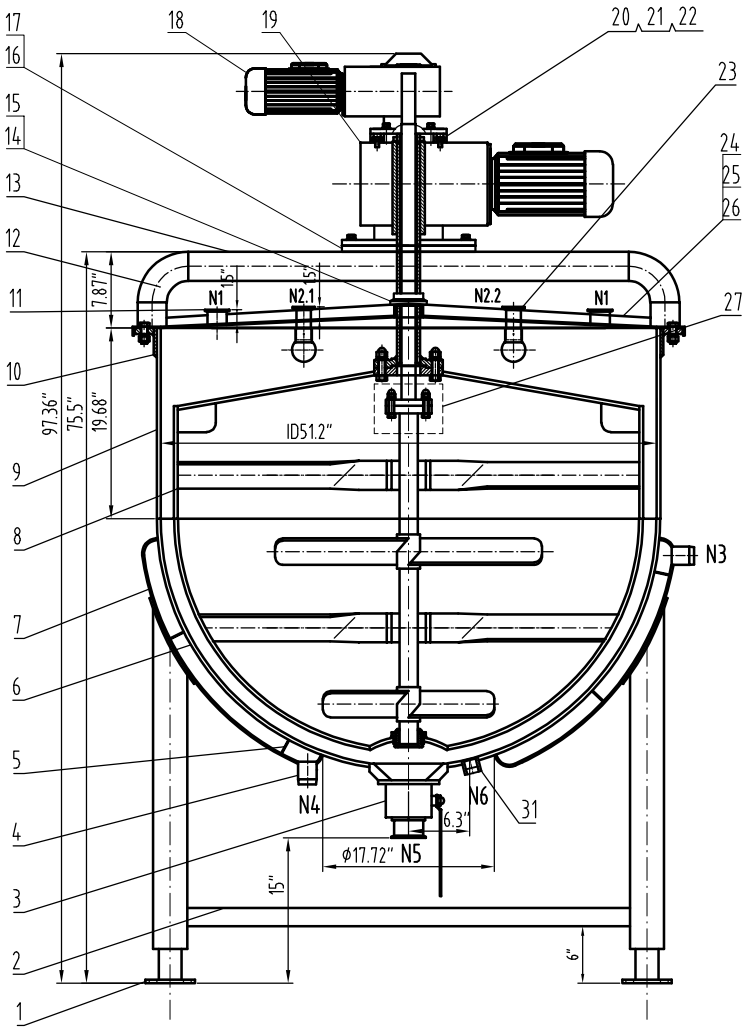

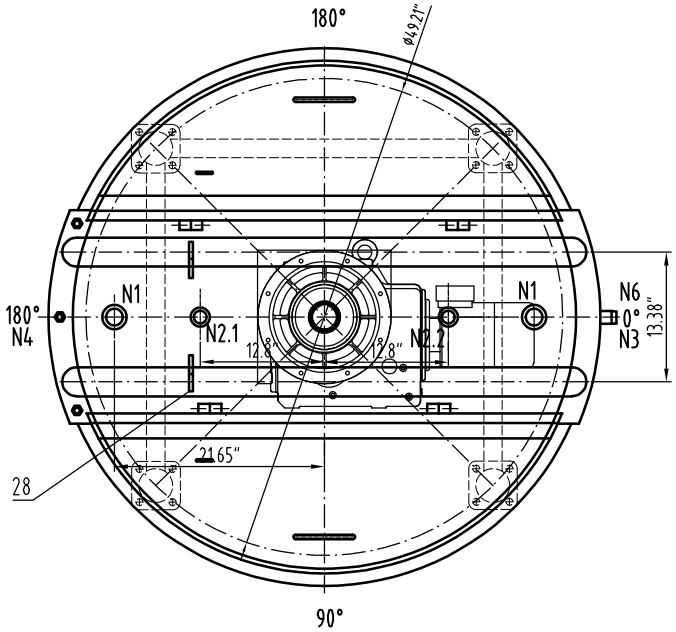

技术要求Technical Requirement

1.填充金属符合SFA-5.9，含碳量不超过0.10%。

The used filler metal shall be conformed to SFA-5.9 with carbon content not exceeding 0.10%.

2.除非另有说明，所有被ID受压焊接接头均视为全焊透接头并为，连续焊，并应采用焊缝识别卡（JIC）上盖定所WPS施焊；完工的纵、环向焊接接头符合UW-35的要求。

Unless otherwise specified,All the groove welding joints for pressure parts are of full penetration type, continuous, and shall be welded as per the WPS designated by JIC; Finished longitudinal and circumferential joints conform to UW-35.

3.除非另有说明，未注明的尺寸公差见质控文件Q/HD-PD-03-2011.

Unless otherwise specified, does not indicate the size tolerance and see the program file Q/HD-PD-03-2011.

4.内侧抛光RA 0.6,外侧: RA 0.8。Interior finish : Ra0.6, Exterior finish: Ra0.8.

5.安全设施要由用户在安装在外部管路中,以确保容器内的压力不会超过容器的最大允许工作压力。

The user shall be in charge for installing safety devices in outer pipe system connected to this tank, and to ensure the pressure in the tank not exceeding its MAWP pressure;

6.本设备的包装运输按JB4711-2003《压力容器涂敷与运输包装》的规定。

This equipment's packing and transportation shall conform to the regulation of [Pressure Vessel Coating and Transportation Packing] ,JB4711-2003.

DESIGN DATA SHEET 设 计 数 据 表

CODE 规范	ASME BPVC SECTION VIII DIUISION I 2023 EDITION. ASME<<锅炉及压力容器规范>>第VIII卷第一册<<压力容器建造规则>>,2023版.

	SHELL 筒体	JACKET 夹套	ASME STAMP ASME钢印要求	YES,WITH U DESIGNATOR FOR JACKET ONLY
FLUID 介质	/	STEAM 冰蒸气	NB REGISTRATION REQUIREMENTS NB注册要求	YES
FLUID PERFORMANCE 介质特性	Non lethal 非致死	Non lethal 非致死	CRN REGISTRATION REQUIREMENTS CRN注册要求	NO
WORKING TEMPERATURE 工作温度 *F	320	320	WELDING ROD TYPE 焊条型号	AS PER WPS 按焊接工艺规定
WORKING PRESSURE 工作压力 Psi	0	80	WELDING REGULATION 焊接规程	NOTE 2
DESIGN TEMPERATURE 设计温度 *F	330	330	WELD STRUCTURE 焊缝结构	COMPRESSION STRUCTURE ADOPTS FULL PENETRATION 受压部件采用全焊透结构
MDMT 最低设计金属温度 *F	-4	-4°F AT 90Psi	THICKNESS OF FILLET WELD EXCEPT NOTED 除注明外角焊缝厚度	AS PER THE THICKNESS OF THINNER PLATE 按较薄板厚度
DESIGN PRESSURE 设计压力 Psi	0	90Psi AT 330°F	PRESSURE TEST TEMPERATURE 压力试验温度 *F	41-118
MAWP 最大允许工作压力 Psi	0	90Psi AT 330°F	N.D.E. 无损检测 / WELDING JOINT CATEGORY 焊接接头类别	METHOD-EXCRATE 方法-检测率 / ACC. STD. 验收标准
CORROSION ALLOWANCE 腐蚀裕量 in	0		A,B	射线抽查 SPOT RT / UW-11(b)
JOINT EFFICIENCY Shell/ head 焊接接头系数 筒体/封头	0.85/0.85		C,D	/ /
HYDRO. TEST PRESSURE 液压试验压力 Psi	119		TOTAL CAPACITY 全容积 gal	327
GAS LEAKAGE TEST PRESSURE 气密性试验压力 Psi	NA		IMPACT TEST 冲击试验	Exemped per UHA-51 豁UHA-51免检
NOZZLE ORIENTATION 管口方位	AS PER THIS DRAWNING 按本图		HEAT TREATMENT 热处理	Exemped per UHA-32AND UHA-44 豁UHA-32和UHA-44 免检
MATERIAL FOR MAIN PRESSURE PARTS 主要受压元件材料	SA-240 304 SA-240 316L SA-312 TP304		质量 MASS / NET MASS FOR EQUIP. 设备净质量 ib	
FULL COEFFICIENT 充满系数	/		OPERATING MASS 操作质量 ib	/
INSULATION THICKNESS 保温层厚度 in	/		FULL WATER MASS 充满水质量 ib	

NOZZLE SCHEDULE 管 口 表

MARK 符号	NOMINAL SIZE 公称尺寸	QTY. 数量	CONNECTING SIZE AND STANDARD 连接尺寸及标准	FACE 法兰面形式	SERVICE 用途或名称	REMARKS 备注
N1	2"	2	3A	TC	INLET	
N2	1.5"	2	3A	TC	CIP	
N3	1.5"	1		NPT	STEAM INLET	
N4	1.5"	1		NPT	STEAM OUTLET	
N5	3"	1	3A	TC	OUTLET	
N6	1 1/4"	1		UNC	Temperature sensor	

PART NUMBER 件号	DWG. NO. OR STD NO 图号或标准号	DESIGNATION 名称	QTY 数量	MATERIAL 材料	SINGLE 单	TOTAL 总 WEIGHT 重量 (Kg)	REMARKS 备注
31	HD25A-020-08	Temperature sensor 温度传感器	1	S31603			
30	HD25A-020-07	FLANGE 喇叭口法兰	2	S30408			
29		FLANGE 螺栓M16x2"	6	A2-70			配螺母，平垫垫
28	HD25A-020-06	COVER LOCK 盖锁	2	S30408			
27	HD25A-020-05	NAMEPIATE 铭牌	1	SA-240 304			
26	HD25A-020-04	protective screening 安全网	2	S31603			
25	HD25A-020-03	COVE 盖子	2	S30408			
24		BRIDGE 桥	1	S31603			
23		CIP 喷洗 1.5"	2	S31603			
22	GB/T70.1	BOLT 内六角圆柱头螺钉 M16X0.8"	4	A2-70			
21	GB/T5783	BOLT 螺栓 M10X1.2"	4	A2-70			配平垫圈和弹簧垫圈
20		CONNECTING FLANGE 转接法兰	1	S30408			
19		REDUCER 减速机JRTKAF89DE132S4	1	ASSEMBLY 组合件			5HP,28rpm
18		REDUCER 减速机JRTKAF49DE100M4	1	ASSEMBLY 组合件			3HP,65rpm
17	GB/T5783	BOLT 螺栓 M16X1.78"	4	A2-70			配平垫圈和弹簧垫圈
16		ENGINE BASE FLANGE 机座法兰	1	S30408			
15		OIL SEAL COVER 护油盖	1	PTFE 聚四氟乙烯			
14		O-RING SEALS O型密封圈 内径2.32"x0.2"	1	SILICONE RUBBER 硅橡胶			
13		PIPE 接管ϕ3"X0.236"/L=106.3"	1	S30408			
12		ELBOW 90°弯头 ϕ3"X0.236"	4	S30408			
11		FERRULE 卡箍接头2"/L=1.8"	2	S31603			
10		REINFORCING RING 加强圈 t=0.315" L=2.75"	1	S30408			
9		SHELL 筒体ID51.2"X0.394"/L=19.7"	1	SA-240 316L			
8		MIXING SYSTEM 搅拌系统	1	ASSEMBLY 组合件			
7		SPHERICAL HEAD JACKET 夹套球形封头ID55.1"x0.197"(0.177")	1	SA-240 304			
6		SPHERICAL HEAD 球形封头ID51.2"x0.394"(0.354")	1	SA-240 316L			
5		Jacket guide plate 夹套导流板t=0.08"	1	SA-240 304			
4	HD25A-020-02	JOINT FNPT 接头 NPT 1.5"	2	SA-312 TP304			
3		FERRULE 卡箍接头2"/L=1.8"	1	S31603			
2		LEG 支腿法兰ϕ1.9"x0.12" L=31.89"	3	S30408			
1	HD25A-020-01	LEG 可调支腿	4	S30408			
3							
2							
1							

修改号 REV.NO.	说明 DESCRIPTION	设计 PREPARED BY	审核 CHECKED BY	批准 APPROVED BY	日期 DATE

陕西宏达实业有限公司
SHAANXI HONGDA INDUSTRY CO., LTD

PREPARED BY 设计		250USG SPHERICAL TANK 250加仑球形锅	PROCESS STAGE 加工阶段
CHECKED BY 审核			DRAWING NO. 图号: HD25A-020-00
APPROVED BY 批准			PROJECT NUMBER 设计项目: 25-0519-01-HA
		SCALE 比例 1:7 / WEIGHT 重量(KG)	GENERAL DRAWING 总图
			REV 版次 0 / TOTAL 共: 13 / PAGE 第: 1

A B类焊接接头
Category A,B welding joint
不按比例 Not to scale

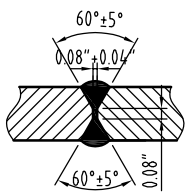

接管焊接接头
nozzle welding joint
不按比例 Not to scale

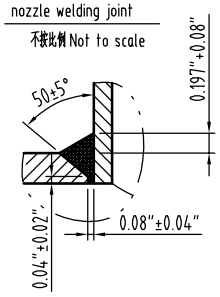

夹套焊接接头
jacketed welding joint
不按比例 Not to scale

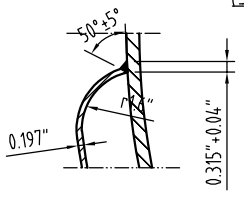
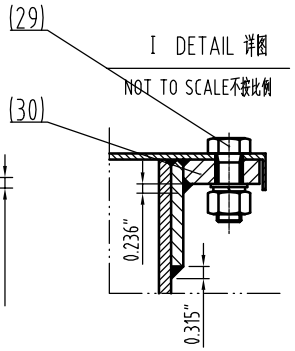
I DETAIL 详图
NOT TO SCALE不按比例