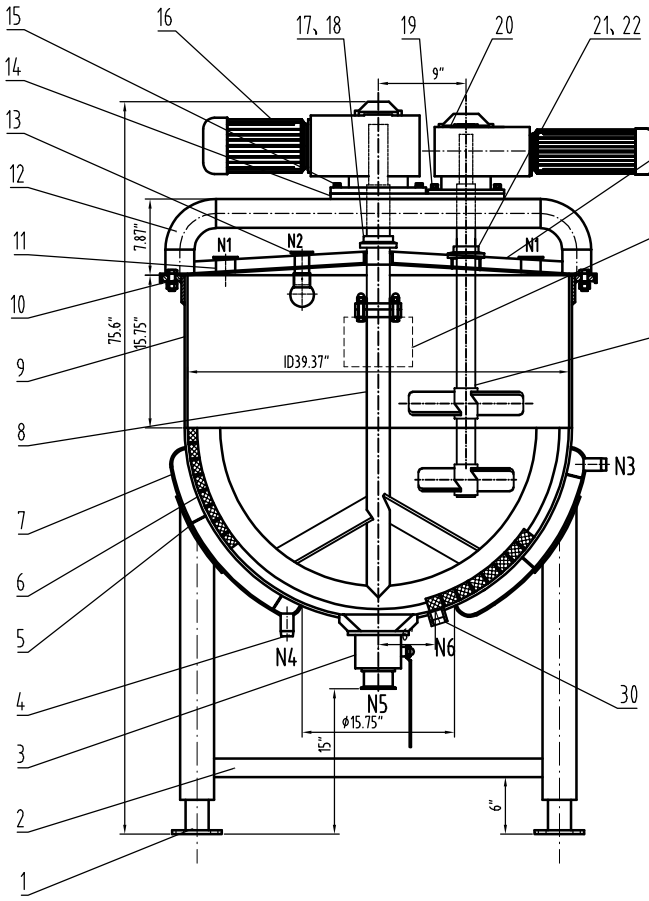

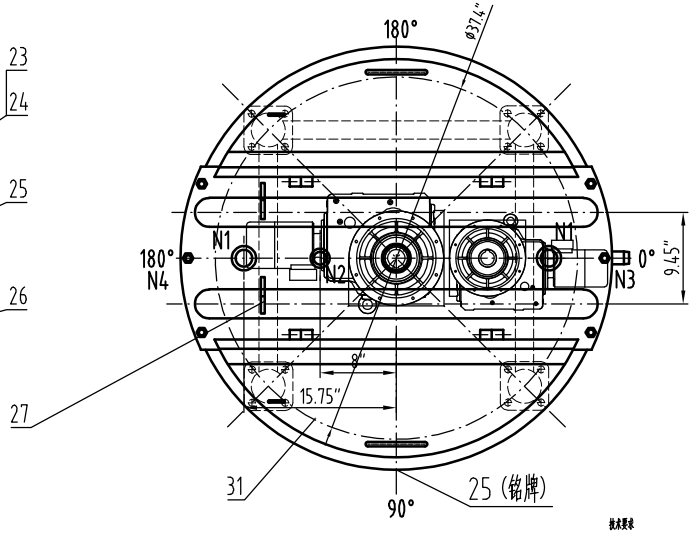

I DETAIL 详图

NOT TO SCALE不按比例

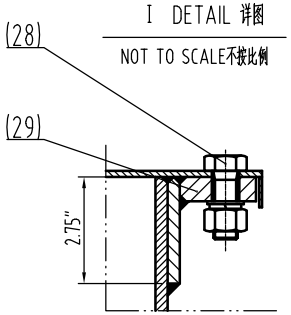

A B类焊接接头

Category A,B welding joint

不按比例 Not to scale

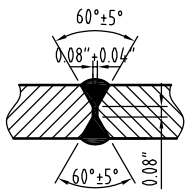

接管焊接接头

nozzle welding joint

不按比例 Not to scale

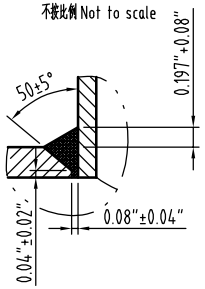

夹套焊接接头

jacketed welding joint

不按比例 Not to scale

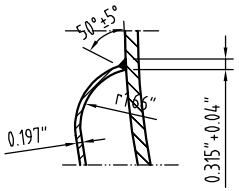

技术要求

Technical Requirement

1.填充金属符合SFA-5.9，含碳量不超过0.10%。

The used filler metal shall be conformed to SFA-5.9 with carbon content not exceeding 0.10%.

2.除非另有说明，所有坡口受压焊接接头应按为全焊透接头形式，连续焊，并应采用聚硅烷沉淀卡 (JIC)上盘定制WPS施焊；完工纵缝、环向焊接接头符合UW-35规要求。

Unless otherwise specified,All the groove welding joints for pressure parts are of full penetration type, continuous, and shall be welded as per the WPS designated by JIC; Finished longitudinal and circumferential joints conform to UW-35.

3.除非另有说明，未注明的尺寸公差见图纸/文件Q/HD-PD-03-2011.

Unless otherwise specified, does not indicate the size tolerance and see the program file Q/HD-PD-03-2011.

4.内侧镜光RA 0.6,外侧 RA 0.8. Interior finish : Ra0.6, Exterior finish: Ra0.8.

5.安全附装置由用户负责安装在外部管路中,以确保容器内的压力不会超过容器的最大允许工作压力。

The user shall be in charge for installing safety devices in outer pipe system connected to this tank, and to ensure the pressure in the tank not exceeding its MAWP pressure;

6.本设备的包装运输按JB4711-2003《压力容器涂敷与运输包装》的规定。

This equipment's packing and transportation shall conform to the regulation of [Pressure Vessel Coating and Transportation Packing] ,JB4711-2003.

DESIGN DATA SHEET 设 计 数 据 表

CODE 规范	ASME BPVC SECTION VIII DIUISION I 2023 EDITION. ASME<<锅炉及压力容器规范>>第VIII卷第一册<<压力容器建造规则>>,2023版.

	SHELL 筒体	JACKET 夹套	ASME STAMP ASME钢印要求	YES,WITH U DESIGNATOR FOR JACKET ONLY
FLUID 介质	/	STEAM 冰蒸气	NB REGISTRATION REQUIREMENTS NB 注册要求	YES
FLUID PERFORMANCE 介质特性	Non lethal 非致死	Non lethal 非致死	CRN REGISTRATION REQUIREMENTS CRN 注册要求	NO
WORKING TEMPERATURE 工作温度 *F	320	320	WELDING ROD TYPE 焊条型号	AS PER WPS 按焊接工艺规定
WORKING PRESSURE 工作压力 Psi	0	80	WELDING REGULATION 焊接规程	NOTE 2
DESIGN TEMPERATURE 设计温度 *F	330	330	WELD STRUCTURE 焊缝结构	COMPRESSION STRUCTURE ADOPTS FULL PENETRATION 受压部件采用全焊透结构
MDMT 最低设计金属温度 *F	-4	-4°F AT 90Psi	THICKNESS OF FILLET WELD EXCEPT NOTED 除注明外角焊缝厚度	AS PER THE THICKNESS OF THINNER PLATE 按较薄板厚度
DESIGN PRESSURE 设计压力 Psi	0	90Psi AT 330°F	PRESSURE TEST TEMPERATURE 压力试验温度 *F	41-118
MAWP 最大允许工作压力 Psi	0	90Psi AT 330°F	N.D.E. 无损检测 / WELDING JOINT CATEGORY 焊接接头类别	METHOD-EXCRATE 方法-检测率 / ACC. STD. 验收标准
CORROSION ALLOWANCE 腐蚀裕量 in	0		A,B	射线检测 SPOT RT UW-11(b) / UW-52
JOINT EFFICIENCY Shell/ head 焊接接头系数 筒体/封头	0.85/0.85		C,D	/ /
HYDRO. TEST PRESSURE 水压试验压力 Psi	119		TOTAL CAPACITY 全容积 gal	162
GAS LEAKAGE TEST PRESSURE 气密性试验压力 Psi	NA		IMPACT TEST 冲击试验	Exemped per UHA-51 豁UHA-51免免
NOZZLE ORIENTATION 管口方位	AS PER THIS DRAWNING 按本图		HEAT TREATMENT 热处理	Exemped per UHA-32AND UHA-44 豁UHA-32和UHA-44 免免
MATERIAL FOR MAIN PRESSURE PARTS 主要受压元件材料	SA-240 304 SA-240 316L SA-312 TP304	质量 MASS	NET MASS FOR EQUIP. 设备净质量 ib	
FULL COEFFICIENT 充满系数	/		OPERATING MASS 操作质量 ib	/
INSULATION THICKNESS 保温层厚度 in	/		FULL WATER MASS 充满水质量 ib	

NOZZLE SCHEDULE 管 口 表

MARK 符号	NOMINAL SIZE 公称尺寸	QTY. 数量	CONNECTING SIZE AND STANDARD 连接尺寸及标准	FACE 法兰面形式	SERVICE 用途或名称	REMARKS 备注
N1	2"	2	3A	TC	INLET	
N2	1.5"	1	3A	TC	CIP	
N3	1.5"	1		1.5"NPT	STEAM INLET	
N4	1.5"	1		1.5"NPT	STEAM OUTLET	
N5	3"	1	3A	TC	OUTLET	
N6	1 1/4"	1		UNC	Temperature sensor	

PART NUMBER 件号	DWG. NO. OR STD NO 图号或标准号	DESIGNATION 名称	QTY 数量	MATERIAL 材料			SINGLE 单	TOTAL 总 WEIGHT 重量 (Kg)	REMARKS 备注
16		REDUCER 减速机H.JKAF67	1	ASSEMBLY 组合件					2.2KW,28rpm
15	GB/T5783	BOLT 螺栓 M12X1.57"	4	A2-70					配平垫，弹垫
14	HD24A-026-06	ENGINE BASE FLANGE 机座法兰17.9"X9.84"X0.55"	1	S30408					
13	HD24A-026-05	CIP 喷淋 1.5"	1	S31603					
12	HD24A-026-04	LINTEL 过梁ø3"x0.236"	2	S30408					
11		FERRULE 卡箍接头2"/L=1.77"	2	S31603					
10		REINFORCING RING 加强圈ID40"X0.315" L=2.75"	1	S30408					
9		SHELL 筒体ID39.37"x0.315"/L=15.75"	1	SA-240 316L					
8	HD24A-026-03	MIXING SYSTEM 搅拌系统	1	ASSEMBLY 组合件					
7		SPHERICAL HEAD JACKET 夹套球形封头ID43.3"x0.197"[0.177"]	1	SA-240 304					
6		SPHERICAL HEAD 球形封头ID39.37"x0.315"[0.283"]	1	SA-240 316L					
5		Jacket guide plate 夹套导流板t=0.078"	1	SA-240 304					
4	HD24A-026-02	JOINT FNPT 接头 NPT 1.5"	2	SA-312 TP304					
3		Valve 螺旋下料阀 3"	1	S31603					
2		LEG 支腿总杆ø1.89"x0.118" L=23.5"	3	S30408					
1	HD24A-026-01	LEG 可调支腿	4	S30408					
31	HD24A-026-16	protective screening 安全网	2	S31603					
30	HD24A-026-15	Temperature sensor 温度传感器	1	S31603					
29	HD24A-026-14	FLANGE 螺口弧板 t=0.55"	2	S30408					
28		FLANGE 螺栓M16x2"	6	A2-70					配螺母，平垫垫
27	HD24A-026-13	COVER LOCK 盖锁	2	S30408					
26	HD24A-026-12	MIXING SYSTEM 搅拌系统B	1	ASSEMBLY 组合件					
25	HD24A-026-11	NAMEPIATE 铭牌 t=0.078"	1	SA-240 304					
24	HD24A-026-10	COVE 盖子 t=0.078"	2	S30408					
23	HD24A-026-09	BRIDGE 桥 t=0.157"	1	S31603					
22	GB/T3452.1	O-RING SEALS O型密封圈 内径ø1.85"X0.21"	1	SILICONE RUBBER 硅橡胶					
21	HD24A-026-08	OIL SEAL COVER 护油盖ø1.89"	1	PTFE 聚四氟乙烯					
20		REDUCER H.JKAF47	1	ASSEMBLY 组合件					1.5KW,63rpm
19	GB/T5783	BOLT 螺栓 M10X1.2"	4	A2-70					配平垫，弹垫
18	GB/T3452.1	O-RING SEALS O型密封圈 内径ø1.93"X0.21"	1	SILICONE RUBBER 硅橡胶					
17	HD24A-026-07	OIL SEAL COVER 护油盖ø1.97"	1	PTFE 聚四氟乙烯					
3									
2									
1									

修改号 REV.NO.	说明 DESCRIPTION	设计 PREPARED BY	审核 CHECKED BY	批准 APPROVED BY	日期 DATE

陕西宏达实业有限公司
SHAANXI HONGDA INDUSTRY CO., LTD

PREPARED BY 设计		100USG SPHERICAL TANK 100加仑球形锅	PROCESS STAGE 加工阶段
CHECKED BY 审核			DRAWING NO. 图号: HD24A-026-00
			PROJECT NUMBER 设计项目: 24-0612-01-HA
			GENERAL DRAWING 总图
APPROVED BY 批准		SCALE 比例 1:6 / WEIGHT 重量(ib)	REV 版次 0 / TOTAL 共: 25 / PAGE 第: 1