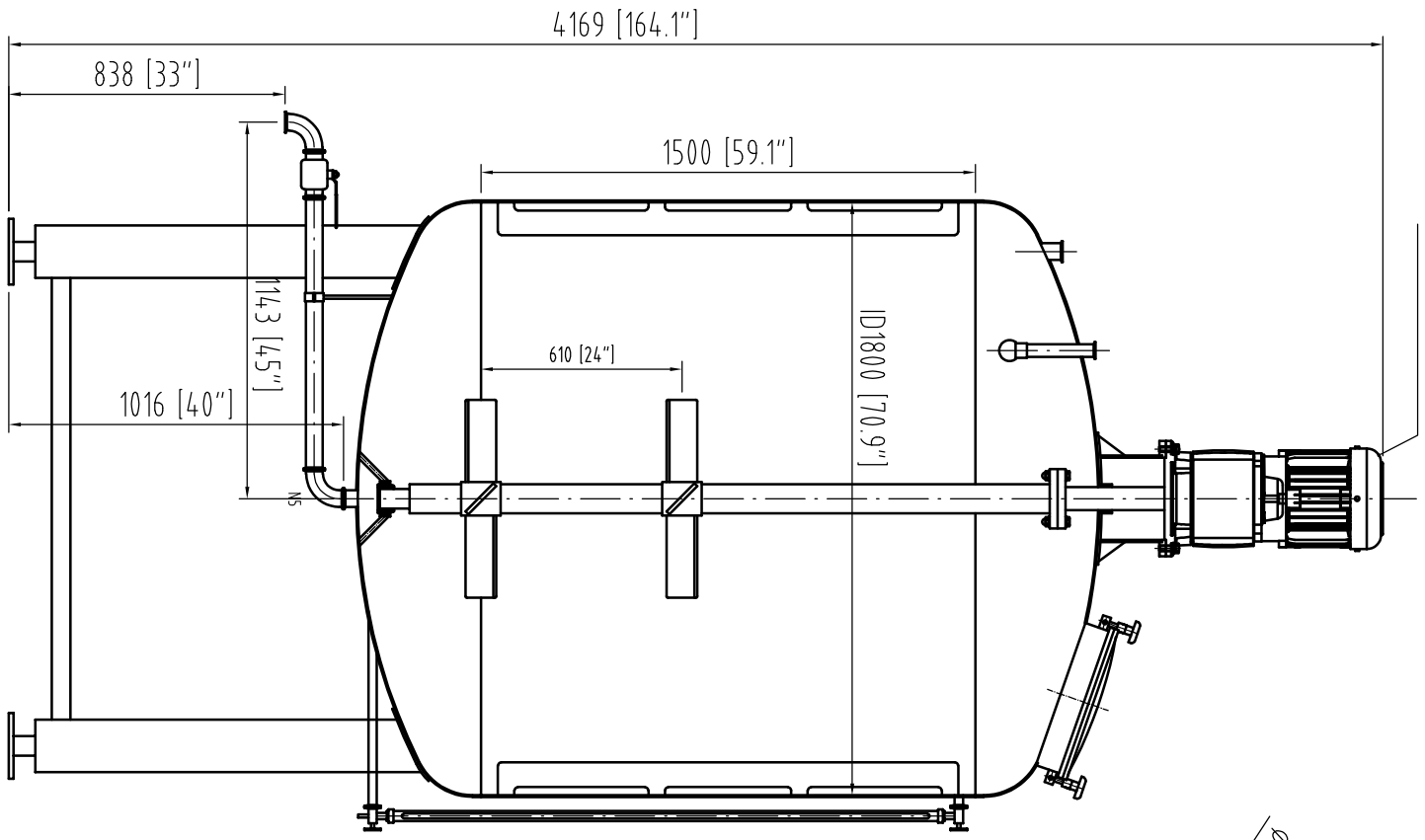

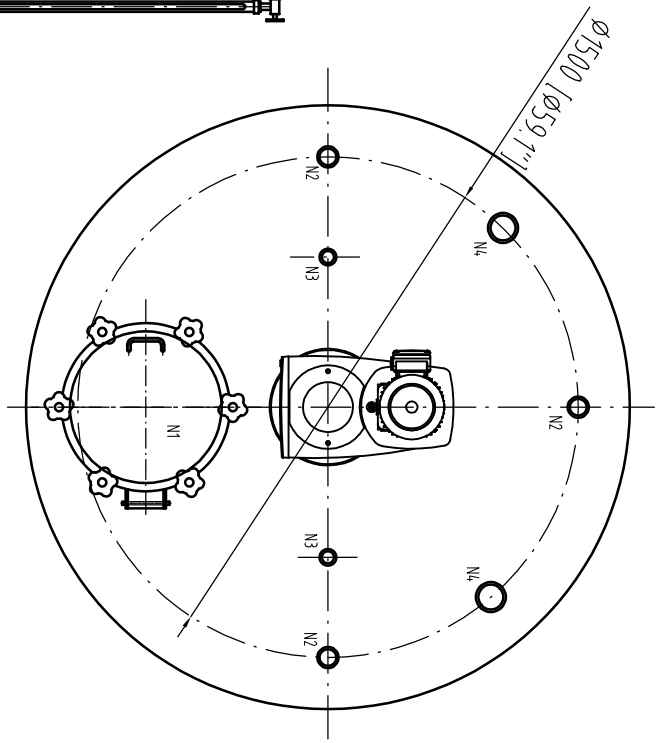

MATERIAL SCHEDULE

ITEM	QTY.	SIZE/THICK	MATERIAL	DESCRIPTION
1	4	ϕ159x6	SS 304	LEG
2	2	5mm.	SS 316L	Dished head
3	1	5mm.	SS 316L	SHELL

NOZZLE SCHEDULE

ITEM	QTY.	MATERIAL	SIZE	DESCRIPTION
N1	1	316L SS	18"	Manway
N2	3	316L SS	2" TC	INLET
N3	2	316L SS	1.5" TC	CIP
N4	2	316L SS	3" TC	INLET
N5	1	316L SS	2" TC	OUTLET

FINISH: INTERIOR: 316L S.S. SURFACES - #4 SANITARY FINISH (3A STANDARD-Ra RANGE 23-32) WELDS - GROUND SMOOTH & FLUSH TO #4 SANITARY FINISH (3A STANDARD-Ra RANGE 23-32) EXTERIOR: 304 S.S. SURFACES - #4 SANITARY FINISH WELDS-STRIPE BUFFED W/ DISCOLORATION REMOVED

DRIVE: 20HP@55 RPM, 230/460V, 3 PH, 60HZ

SHAANXI HONGDA INDUSTRY CO.,LTD

PREPARED BY	
CHECKED BY	
APPROVED BY	
SCALE	1:8
WEIGHT	
REV	3
DRAWING NO.	25-0404-01-HA_1000
PROJECT NUMBER	25-0404-01-HA
	1000USG Mixing Tank
	GENERAL DRAWING
TOTAL:	1
PAGE :	1