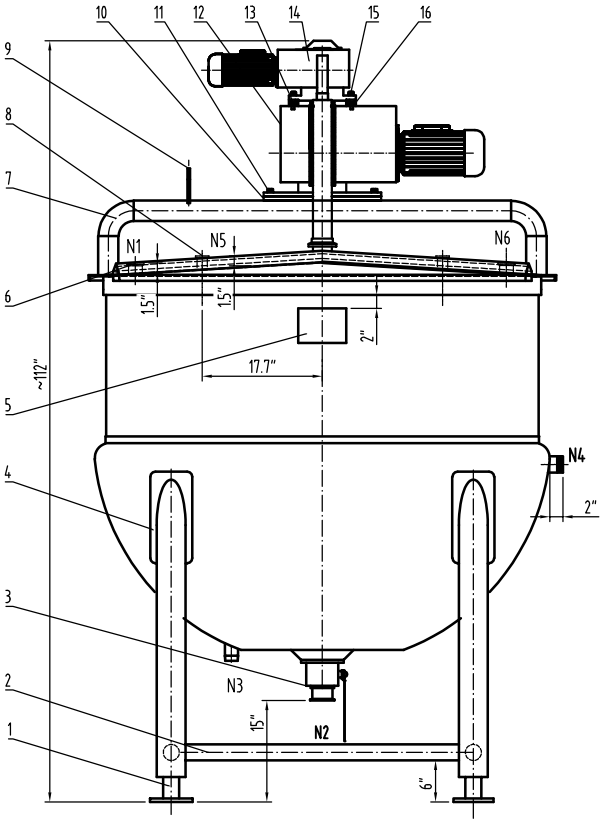

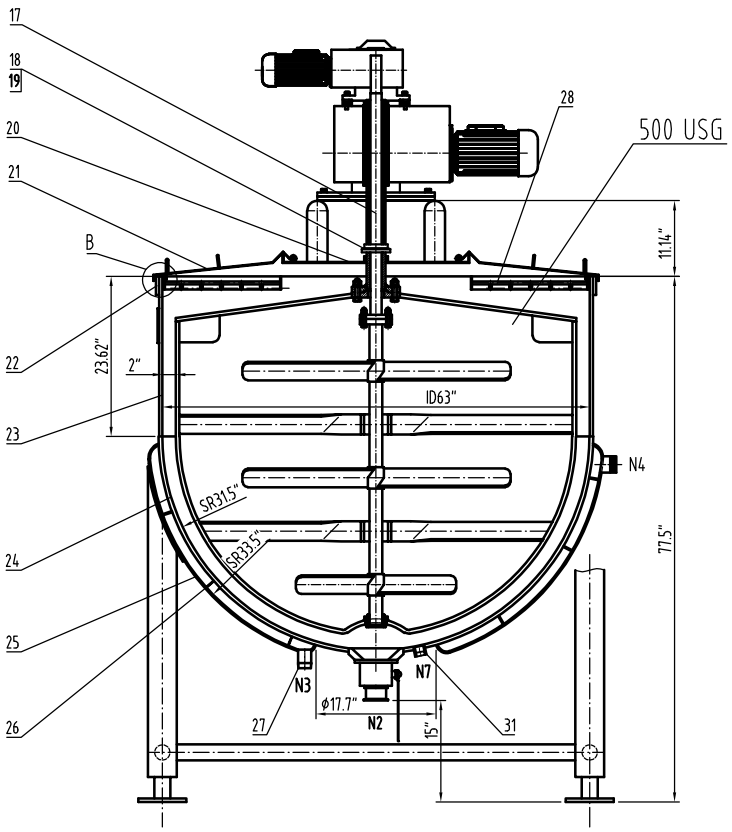

A B类焊接接头
Category A,B welding joint

不按比例 Not to scale

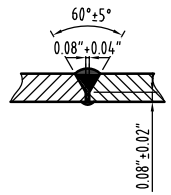

接管焊接接头
nozzle welding joint

不按比例 Not to scale

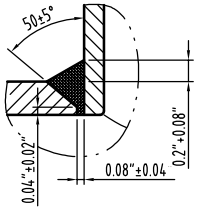

夹套焊接接头
jacketed welding joint

不按比例 Not to scale

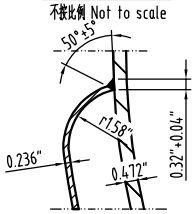

DESIGN DATA SHEET 设 计 数 据 表

CODE 规范	ASME BPVC SECTION VIII DIUISION I 2023 EDITION. ASME<<锅炉及压力容器规范>>第VIII卷第一册<<压力容器建造规则>>,2023版.				
	SHELL 筒体	JACKET 夹套	ASME CERTIFICATION MARK ASME钢印要求	YES,WITH U DESIGNATOR FOR JACKET ONLY	
FLUID 介质	/	STEAM 冰蒸气	NB REGISTRATION REQUIREMENTS NB 注册要求	YES	
FLUID PERFORMANCE 介质特性	Non lethal 非致死	Non lethal 非致死	CRN REGISTRATION REQUIREMENTS CRN 注册要求	NO	
WORKING TEMPERATURE 工作温度 *F	320	320	WELDING ROD TYPE 焊条型号	AS PER WPS 按焊接工艺规定	
WORKING PRESSURE 工作压力 psi	0	80	WELDING REGULATION 焊接规程	NOTE 2	
DESIGN TEMPERATURE 设计温度 *F	330	330	WELD STRUCTURE 焊缝结构	COMPRESSION STRUCTURE ADMITS FULL PENETRATION 受压部件采用全焊透结构	
MDMT 最低设计金属温度 *F	-4	-4°F AT 90psi	THICKNESS OF FILLET WELD EXCEPT NOTED 除注明外角焊缝厚度	AS PER THE THICKNESS OF THINNER PLATE 按较薄板厚度	
DESIGN PRESSURE 设计压力 psi	0	90psi AT 330°F	PRESSURE TEST TEMPERATURE 压力试验温度 *F	41-118	
MAWP 最大允许工作压力 psi	0	90psi AT 330°F	N.D.E. 无损检测	WELDING JOINT CATEGORY 焊接接头类别	METHOD-EXTENT 方法-检测率 / ACC. STD. 验收标准
CORROSION ALLOWANCE 腐蚀裕量 in	0			A,B	射线检测 SPOT RT / UW-11(b)
JOINT EFFICIENCY Shell/ head 焊接接头系数 筒体/封头	0.85/0.85			C,D	/ /
HYDRO. TEST PRESSURE 液压试验压力 psi	119		TOTAL CAPACITY 全容积 USG	600	
GAS LEAKAGE TEST PRESSURE 气密性试验压力 psi	NA		IMPACT TEST 冲击试验	Exemped per UHA-51 按UHA-51豁免	
NOZZLE ORIENTATION 管口方位	AS PER THIS DRAWNING 按本图		HEAT TREATMENT 热处理	Exemped per UHA-32, UHA-44 按UHA-32, UHA-44豁免	
MATERIAL FOR MAIN PRESSURE PARTS 主要受压元件材料	SA-243 304 SA-240 316L SA-312 TP304		质量 MASS	NET MASS FOR EQUIP. 设备净质量 ibm	/
FULL COEFFICIENT 充满系数	/			OPERATING MASS 操作质量 ibm	/
INSULATION THICKNESS 保温层厚度 in	/			FULL WATER MASS 充满水质量 ibm	/

NOZZLE SCHEDULE 管 口 表

MARK 符号	NOMINAL SIZE 公称尺寸	QTY. 数量	CONNECTING SIZE AND STANDARD 连接尺寸及标准	FACE 连接面形式	SERVICE 用途或名称	REMARKS 备注
N1	2"	1	3A	TC	FEED INLET	
N2	3"	1		FLAT	OUTLET	
N3	1.5"	1	ASME B1.20.1-2013	1.5"NPT	STEAM OUTLET	
N4	1.5"	1	ASME B1.20.1-2013	1.5"NPT	STEAM INLET	
N5	1.5"	2	3A	TC	CIP	
N6	2"	2	3A	TC	FEED INLET	
N7	1 1/4"	1		UNC	Temperature sensor	

A向视图

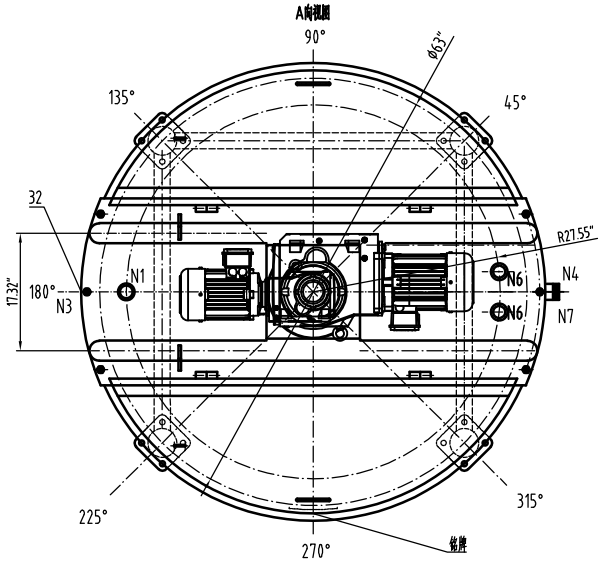

B DETAIL 详图

不按比例 Not to scale

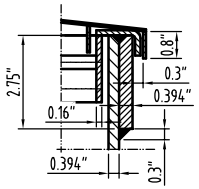

Ⅱ DETAIL 详图

NOT TO SCALE不按比例

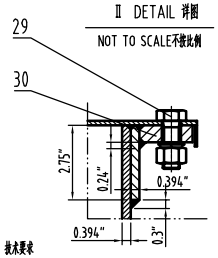

技术要求

Technical Requirement

1.填充金属符合SFA-5.9, 含碳量不超过0.10%。Having a carbon content not exceeding 0.10% and produced with filler metals conforming to sfa-5.9.

2.除非另有说明，所有坡口受压焊接接头从属为全焊透接头形式，连续焊，并应采用焊缝识别卡（JIC)上指定的WPS施焊；完工的纵、环向焊接接头符合UW-35的要求。Unless otherwise specified,all the groove welding joints for pressure parts are of full penetration type, continuous, and shall be welded as per the wps designated by jic; Finished longitudinal and circumferential joints conform to UW-35.

3.除非另有说明，未注明的尺寸公差见程序文件Q/HD-PD-03-2011.

Unless otherwise specified, does not indicate the size tolerance and see the program file Q/HD-PD-03-2011.

4.内侧抛光:RA 0.8,外侧: RA 0.8。Interior finish : Ra0.8,Exterior finish: Ra0.8,

5.安全泄放装置由用户负责安装在外部管路中,以确保容器内的压力不会超过容器的最大允许工作压力;

The user shall be in charge for installing safety devices in outer pipe system connected to this tank, and to ensure the pressure in the tank not exceeding its MAWP pressure;

6.本设备的包装运输按JB4711-2003《压力容器涂敷与运输包装》的规定。

This equipment's packing and transportation shall conform to the regulation of [Pressure Vessel Coating and Transportation Packing],JB4711-2003.

PART NUMBER 件号	DWG. NO. OR STD NO 图号或标准号	DESIGNATION 名称	QTY 数量	MATERIAL 材料	SINGLE 单	TOTAL 总 WEIGHT 重量 (ibm)	REMARKS 备注
14		gear motor 减速机JRTKAF59DE100L4	1	ASSEMBLY 组合件			4HP,68rpm
13	GB/T70.1	BOLT 内六角圆柱头螺钉 M12X1"	4	A2-70			
12		gear motor 减速机JRTKAF99DE132S4	1	ASSEMBLY 组合件			7.5HP,28rpm
11	GB/T5783	BOLT 螺栓 M16X1.8"	8	A2-70			配平垫圈和弹簧垫圈
10	HD24A-030-06	ENGINE BASE FLANGE 机座法兰17.7"X17.7"X0.63"	1	S30408			
9	HD24A-030-05	COVER LOCK 盖锁	2	S30408			
8	HD24A-030-04	CIP 清洗球	2	316L			N5
7	HD24A-030-03	LINTEL 过梁 ϕ3"X0.236"	2	S30408			
6		FERRULE 卡箍接头2"/L=1.8"	3	316L			N1, N6
5	HD24A-030-02	NAMEPIATE 铭牌 t=0.08"	1	SA-240 304			
4		PLATE 支撑垫板12.8"X6.7"X0.236"	4	SA-240 304			
3		VALVE 螺底下排阀3"	1	SA-240 316L			N2
2		SUPPORTING PIPE 支撑管ϕ2.36"X0.157"/L=39.6"	3	S30408			
1	HD24A-030-01	ADJUSTABLE LEGS 调节支腿 ϕ4.25"X0.236"	4	S30408			
31	HD24A-030-15	JOINT 接头	1	SA-312 TP316L			
30	HD24A-030-14	PLATE 强板	2	S30408			
29	GB/T5783	BOLT 螺栓 M16X1.8"	6	A2-70			配平垫圈和弹簧垫圈
28	HD24A-030-13	SAFETY GRATE 安全栅网	2	S31603			
27	HD24A-030-12	JOINT NPT 接头 NPT 1.5" t=0.2"	2	SA-312 TP304			N3, N4
26		GUIDE PLATE 导流板 t=0.08"	1	SA-240 304			
25		SPHERICAL HEAD JACKET 夹套球形封头ID63"X0.236"(0.212")	1	SA-240 304			
24		SPHERICAL HEAD 球形封头ID63"X0.472"(0.425")	1	SA-240 316L			
23		SHELL 筒体ID63"X0.394"/L=23.6"	1	SA-240 316L			
22		REINFORCING RING 加强圈 t=0.47" L=2.75"	1	SA-240 304			
21	HD24A-030-11	LID 盖子 t=0.08"	2	S30408			
20	HD24A-030-10	BRIDGE 桥 t=0.157"	1	S31603			
19	GB/T3452.1	O-RING SEALS O型密封圈 内径2.68"X0.21"	1	SILICONE RUBBER 硅橡胶			
18	HD24A-030-09	OIL SEAL COVER 护油盖	1	PTFE 聚四氟乙烯			
17	HD24A-030-08	MIXING SYSTEM 搅拌系统	1	ASSEMBLY 组合件			
16	HD24A-030-07	CONNECTING FLANGE 顺接法兰	1	S30408			
15	GB/T5783	BOLT 螺栓 M12X1.2"	4	A2-70			配平垫圈和弹簧垫圈
3							
2							
1							

修改号 REV.NO.	说明 DESCRIPTION	设计 PREPARED BY	审核 CHECKED BY	批准 APPROVED BY	日期 DATE

陕西宏达实业有限公司
SHAANXI HONGDA INDUSTRY CO., LTD

PREPARED BY 设计		500USG SPHERICAL TANK 500加仑球形锅	PROCESS STAGE 加工阶段
CHECKED BY 审核			DRAWING NO. 图号: HD24A-030-00
APPROVED BY 批准			PROJECT NUMBER 设计项目: 24-0612-05-HA
		SCALE 比例 1:10 / WEIGHT 重量(ibm)	GENERAL DRAWING 总图
			REV 版次: 0 / TOTAL 共: 29 / PAGE 第: 1