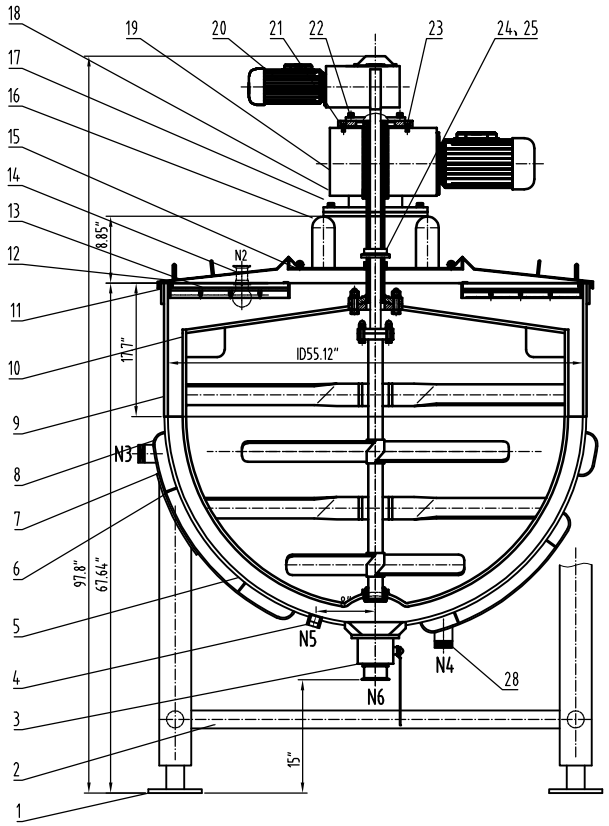

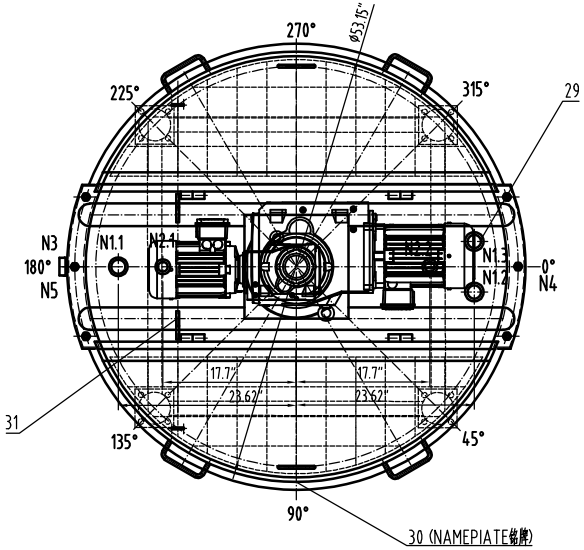

Ⅱ DETAIL 详图

NOT TO SCALE不按比例

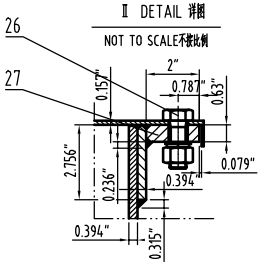

I DETAIL 详图

不按比例 Not to scale

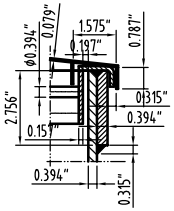

A B类焊接接头

Category A,B welding joint

不按比例 Not to scale

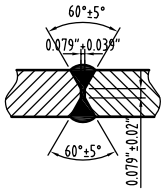

按管焊接接头

nozzle welding joint

不按比例 Not to scale

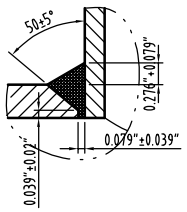

夹套焊接接头

jacketed welding joint

不按比例 Not to scale

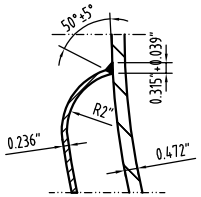

技术要求

Technical Requirement

1.筒壳金属符合SFA-5.9，含碳量不超过0.10%。Having a carbon content not exceeding 0.10% and produced with filler metals conforming to sfa-5.9.

2.除非另有说明，所有被口受压焊接接头必须为全焊透接头形式，连续焊，并应采用焊缝识别卡(JIC)上指定的WPS施焊；完工的纵、环向焊接接头符合UW-35的要求。Unless otherwise specified,all the groove welding joints for pressure parts are of full penetration type, continuous, and shall be welded as per the wps designated by jic; Finished longitudinal and circumferential joints conform to UW-35.

3.除非另有说明，未注明的尺寸公差见程序文件Q/HD-PD-03-2011.

Unless otherwise specified, does not indicate the size tolerance and see the program file Q/HD-PD-03-2011.

4.内侧抛光:RA 0.8,外侧: RA 0.8。Interior finish : Ra0.8,Exterior finish: Ra0.8,

5.安全泄放装置由用户负责安装在外部管路中，以确保容器内的压力不会超过容器的最大允许工作压力；

The user shall be in charge for installing safety devices in outer pipe system connected to this tank, and to ensure the pressure in the tank not exceeding its MAWP pressure;

6.本设备的包装运输按JB4711-2003《压力容器涂敷与运输包装》的规定。

This equipment's packing and transportation shall conform to the regulation of [Pressure Vessel Coating and Transportation Packing] ,JB4711-2003.

DESIGN DATA SHEET 设 计 数 据 表

CODE 规范	ASME BPVC SECTION VIII DIUISION I 2023 EDITION. ASME<<锅炉及压力容器规范>>第VIII卷第一册<<压力容器建造规则>>,2023版.				
	SHELL 筒体	JACKET 夹套	ASME STAMP ASME钢印要求		YES,WITH U DESIGNATOR FOR JACKET ONLY
FLUID 介质	/	STEAM 水蒸气	NB REGISTRATION REQUIREMENTS NB 注册要求		YES
FLUID PERFORMANCE 介质特性	Non lethal 非致死	Non lethal 非致死	CRN REGISTRATION REQUIREMENTS CRN 注册要求		NO
WORKING TEMPERATURE 工作温度 °F	≤330	≤330	WELDING ROD TYPE 焊条型号		AS PER WPS 按焊接工艺规定
WORKING PRESSURE 工作压力 psi	0	≤90	WELDING REGULATION 焊接规程		NOTE 2
DESIGN TEMPERATURE 设计温度 °F	330	330	WELD STRUCTURE 焊缝结构		COMPRESSION STRUCTURE ADOPTS FULL PENETRATION 受压部件采用全焊透结构
MDMT 最低设计金属温度 °F	-4	-4°F AT 90psi	THICKNESS OF FILLET WELD EXCEPT NOTED 除注明外角焊缝厚度		AS PER THE THICKNESS OF THINNER PLATE 按较薄板厚度
DESIGN PRESSURE 设计压力 psi	0	90psi AT 330°F	PRESSURE TEST TEMPERATURE 压力试验温度 °F		41-118
MAWP 最大允许工作压力 psi	0	90psi AT 330°F	N.D.E. 无损检测	WELDING JOINT CATEGORY 焊接接头类别	METHOD-EXCRATE 方法-检测率 / ACC. STD. 验收标准
CORROSION ALLOWANCE 腐蚀裕量 in	0			A,B	射线检测 SPOT RT / UW-11(b) / UW-52
JOINT EFFICIENCY Shell/ head 焊接接头系数 筒体/封头	0.85/0.85			C,D	/ /
HYDRO. TEST PRESSURE 水压试验压力 psi	119		TOTAL CAPACITY 全容积 U.S.gal		370 (JACKET 27 gal)
GAS LEAKAGE TEST PRESSURE 气密性试验压力 psi	NA		IMPACT TEST 冲击试验		Exemped per UHA-51 按UHA-51豁免
NOZZLE ORIENTATION 管口方位	AS PER THIS DRAWNING 按本图		HEAT TREATMENT 热处理		Exemped per UHA-32, UHA-44 按UHA-32、UHA-44豁免
MATERIAL FOR MAIN PRESSURE PARTS 主要受压元件材料	SA-240 304 SA-240 316L SA-312 TP304		质量 MASS	NET MASS FOR EQUIP. 设备净质量 lbm	2140
FULL COEFFICIENT 充满系数	/			OPERATING MASS 操作质量 lbm	/
INSULATION THICKNESS 保温层厚度 in	/			FULL WATER MASS 充满水质量 lbm	/

NOZZLE SCHEDULE 管 口 表

MARK 管号	NOMINAL SIZE 公称尺寸	QTY. 数量	CONNECTING SIZE AND STANDARD 连接尺寸及标准	FACE 连接面形式	SERVICE 用途或名称	REMARKS 备注
N1	2"	3	3A	TC	FEED INLET	
N2	1.5"	2	3A	TC	CIP	
N3	2"	1	ASME B1.20.1-2013	2"NPT	STEAM OUTLET	Ø2.375"X0.218"
N4	2"	1	ASME B1.20.1-2013	2"NPT	STEAM INLET	Ø2.375"X0.218"
N5	3"	1	3A	TC	OUTLET	
N6	1 1/4"	1		UNC	Temperature	sensor

PART NUMBER 件号	DWG. NO. OR STD NO 图号或标准号	DESIGNATION 名称	QTY 数量	MATERIAL 材料	SINGLE 单	TOTAL 总 WEIGHT 重量 (lb)	REMARKS 备注
31	HD25A-021-05	COVER LOCK 盖锁	2	S30408			
30	HD25A-021-04	NAMEPIATE 铭牌 t=0.078"	1	S30408			
29		FERRULE 卡箍接头2"/L=1.73"	3	316L			N1
28		JOINT 2"NPT 接头2"NPT 2.37"x0.218" L=2.5"	2	SA-312M TP304			N3、N4
27	HD25A-021-03	PLATE 弧板 t=0.55"	2	S30408			
26		BOLT 螺栓 M16X1.8"	6	A2-70			配螺母、平垫圈和弹簧垫圈
25	GB/T3452.1	O-RING SEALS O型密封圈 内径2.36"X0.21"	1	SILICONE RUBBER 硅橡胶			
24		OIL SEAL COVER 护油盖	1	PTFE 聚四氟乙烯			
23	GB/T70.1	BOLT 内六角圆柱头螺钉 M12X0.8"	4	A2-70			
22	GB/T5783	BOLT 螺栓 M10X1.2"	4	A2-70			配平垫圈和弹簧垫圈
21		CONNECTING FLANGE 转接法兰	1	S30408			
20		REDUCER 减速机JRTKAF49DE100M4	1	ASSEMBLY 组合件			3HP,65rpm
19		REDUCER 减速机JRTKAF89DE132S4	1	ASSEMBLY 组合件			5HP,28rpm
18	GB/T5783	BOLT 螺栓 M16X1.8"	4	A2-70			配平垫圈和弹簧垫圈
17		ENGINE BASE FLANGE 机座法兰 t=0.55"	1	S30408			
16		LINTEL 过梁 Ø3"X0.236"	2	S30408			
15		BRIDGE 桥 t=0.157"	1	S31603			
14		CIP 喷洗1.5"X2.5"	2	S31603			N2
13	HD25A-021-02	SAFETY GRATE 安全栅网	2	S31603			
12	HD25A-021-01	LID 盖子 t=0.078"	2	S30408			
11		REINFORCING RING 加强圈ID55.43"X0.315" L=2.75"	1	S30408			
10		MIXING SYSTEM 搅拌系统	1	ASSEMBLY 组合件			
9		SHELL 筒体ID55.12"X0.157"/L=17.7"	1	SA-240 316L			
8		SPHERICAL HEAD JACKET 夹套椭圆封头ID59"X0.236"(0.212")	1	SA-240 304			
7		PLATE 支撑板板 t=0.236"	4	SA-240 304			
6		GUIDE PLATE 导流板 t=0.078"	1	SA-240 304			
5		SPHERICAL HEAD 椭圆封头ID55.12"X0.472"(0.425")	1	SA-240 316L			
4		Temperature sensor 温度传感器接头	1	SA312 TP316L			N5
3	3A	VALVE 螺底下排阀 3"	1	S31603			N6
2		SUPPORTING PIPE 支撑管Ø1.9"X0.118"	4	S30408			
1		ADJUSTABLE LEGS 调节支脚 Ø4.25"X0.236"	4	S30408			

REV.NO. 修改号	DESCRIPTION 说明	PREPARED BY 设计	CHECKED BY 审核	APPROVED BY 批准	DATE 日期
3					
2					
1					

陕西宏达实业有限公司
SHAANXI HONGDA INDUSTRY CO., LTD

PREPARED BY 设计		300USG SPHERICAL TANK 300加仑球形锅	PROCESS STAGE 加工阶段
CHECKED BY 审核			DRAWING NO. 图号: HD25A-021-00
APPROVED BY 批准			PROJECT NUMBER 设计项目: 25-0519-02-HA
			GENERAL DRAWING 总图
		SCALE 比例 1:9 / WEIGHT 重量(lb)	REV 版次 0 / TOTAL 共: 30 / PAGE 第: 1