FLEXICON CONVEYOR ASSEMBLY BOM Table			
ITEM NO.	QTY.	PART NUMBER	DESCRIPTION
1	1	TFC-00294566A-Cert	FLEXICON - ARRANGMENT - 98297 - SYSTEM 01
2	1	Drive Stand	STRUCTURAL FRAME, SEE DWG Q14761-02
3	1	Conveyor Hanger Bracket	1/4" PLATE HANGER, SEE DWG Q14761-03
4	1	6071K43	Clevis Rod End, 3/8"-16 Thread
5	1	98957A132	Grade B7 Steel Threaded Rod, 3/8"-16 Thread
6	2	99041A109	Zinc-Plated Steel Square Washer, For 3/8" Screw
7	5	95462A031	Grade 5 Steel Hex Nut, 3/8"-16 Thread
8	8	90126A033	1/2" Zinc-Plated Steel SAE Washer
9	4	95462A033	Grade 5 Steel Hex Nut, 1/2"-13 Thread
10	4	92865A714	Grade 5 Steel Hex Head Screw, 1/2"-13 x 1-1/4" long

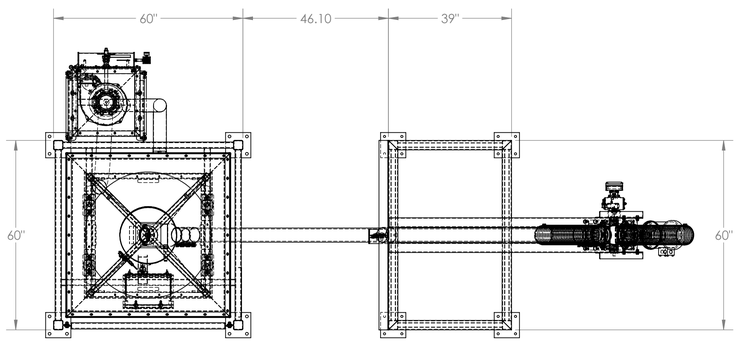

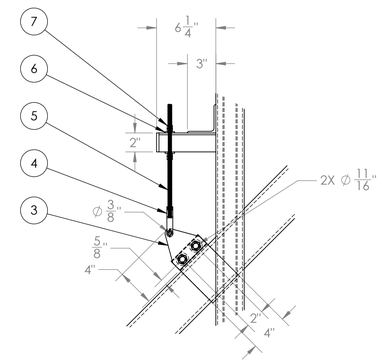

DETAIL A
SCALE 1 : 8

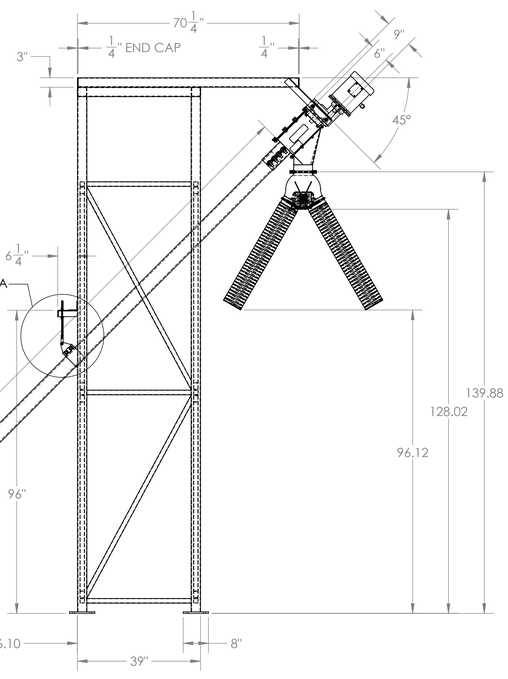

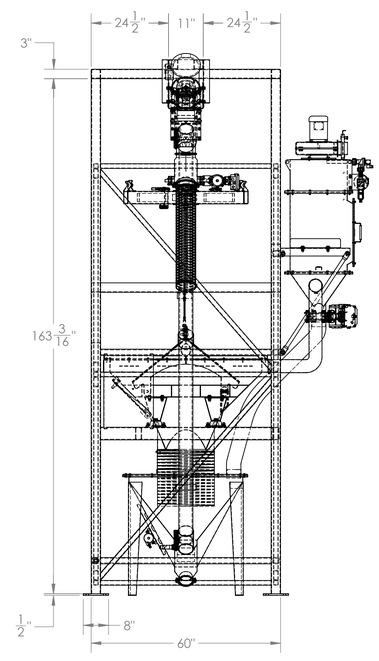

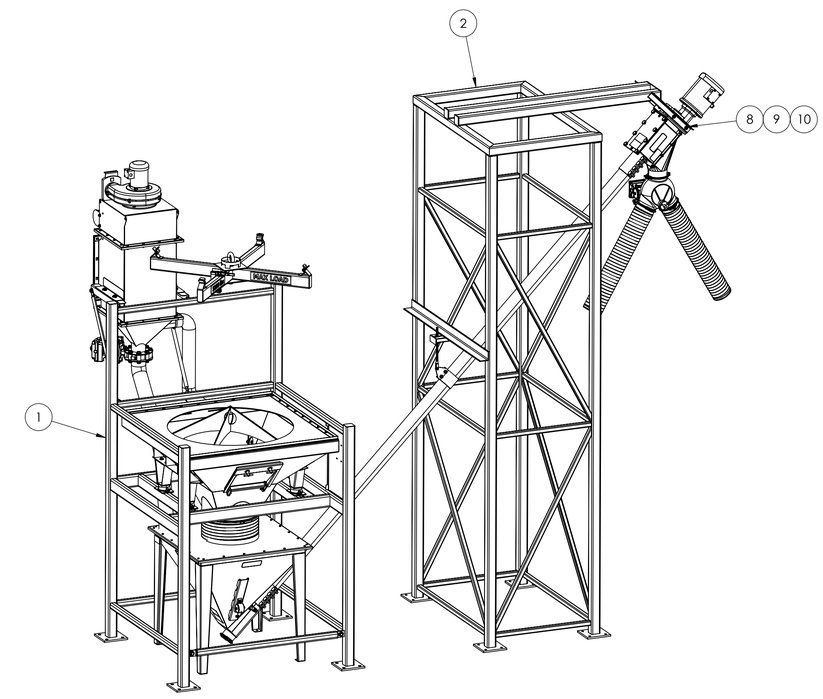

PROPRIETARY AND CONFIDENTIAL
THE INFORMATION CONTAINED IN THIS DRAWING IS THE SOLE PROPERTY OF MATHEWS MECHANICAL. ANY REPRODUCTION IN PART OR AS A WHOLE WITHOUT THE WRITTEN PERMISSION OF MATHEWS MECHANCIAL IS PROHIBITED.

NEXT ASSY | USED ON
APPLICATION

UNLESS OTHERWISE SPECIFIED:
DIMENSIONS ARE IN INCHES
TOLERANCES:
FRACTIONAL ± 1/16"
ANGULAR: ± 1 DEGREE
TWO PLACE DECIMAL ±0.010
THREE PLACE DECIMAL ±0.005
INTERPRET GEOMETRIC TOLERANCING PER:
MATERIAL
FINISH

	NAME	DATE
DRAWN	M. FREDERICK	10/6/2021
CHECKED		
ENG APPR.		
MFG APPR.		
Q.A.		

COMMENTS:

MATHEWS MECHANICAL

TITLE:
GREEN GRO
FLEXICON CONVEYOR ASSEMBLY

SIZE	DWG. NO.	REV
D	Q14761-01	

SCALE: 1:24 WEIGHT: SHEET 1 OF 1

Q14761-01 Green Gro Flexicon Conveyor Assembly