Operator’s Manual

Pump

APT 4/6/8

Type	APT 4/6/8
Document	5200019132
Date	1115
Version	02
Language	EN

5 2 0 0 0 1 9 1 3 2

Copyright notice

© Copyright 2015 by Wacker Neuson Production Americas LLC

All rights, including copying and distribution rights, are reserved.

This publication may be photocopied by the original purchaser of the machine. Any other type of reproduction is prohibited without express written permission from Wacker Neuson Production Americas LLC.

Any type of reproduction or distribution not authorized by Wacker Neuson Production Americas LLC represents an infringement of valid copyrights. Violators will be prosecuted.

Trademarks

All trademarks referenced in this manual are the property of their respective owners.

Manufacturer

Wacker Neuson Production Americas LLC

N92W15000 Anthony Avenue

Menomonee Falls, WI 53051 U.S.A.

Tel: (262) 255-0500 · Fax: (262) 255-0550 · Tel: (800) 770-0957

www.wackerneuson.com

Original instructions

This Operator's Manual presents the original instructions. The original language of this Operator's Manual is American English.

Foreword

SAVE THESE INSTRUCTIONS—This manual contains important instructions for the machine models below. These instructions have been written expressly by Wacker Neuson Production Americas LLC and must be followed during installation, operation, and maintenance of the machines.

Machine	Item Number
APT 4T	5200019643, 5200019644, 5200019792, 5200019793
APT 4S	5200018977, 5200019798
APT 6T	5200019646, 5200019647, 5200019794, 5200019795
APT 6S	5200018982, 5200019799
APT 8T	5200019648, 5200019649, 5200019796, 5200019797
APT 8S	5200018987, 5200019800

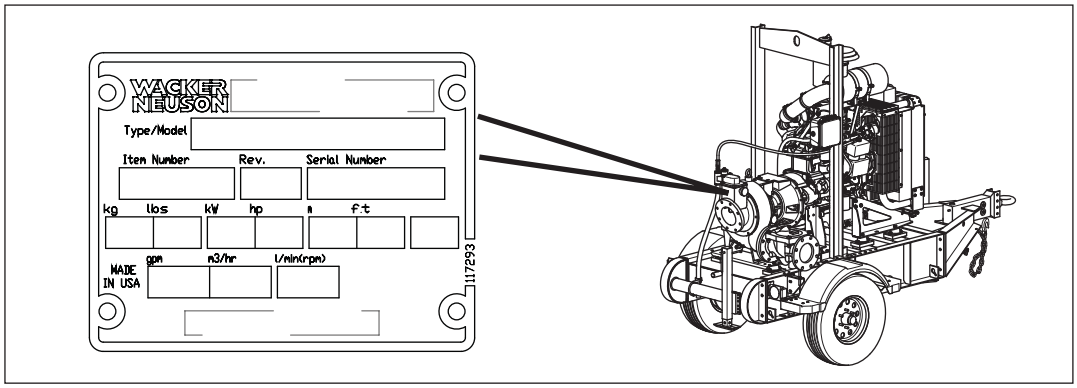

wc_gr011978

Machine identification

A nameplate listing the model number, item number, revision number, and serial number is attached to this machine. The location of the nameplate is shown above.

Serial number (S/N)

For future reference, record the serial number in the space provided below. You will need the serial number when requesting parts or service for this machine.

Serial Number:

Machine documentation

- From this point forward in this documentation, Wacker Neuson Production Americas LLC will be referred to as Wacker Neuson.
- Keep a copy of the Operator's Manual with the machine at all times.
- Use the separate Parts Book supplied with the machine to order replacement parts.
- If you are missing any of these documents, please contact Wacker Neuson to order a replacement or visit www.wackerneuson.com.
- When ordering parts or requesting service information, be prepared to provide the machine model number, item number, revision number, and serial number.

Expectations for information in this manual

- This manual provides information and procedures to safely operate and maintain the above Wacker Neuson model(s). For your own safety and to reduce the risk of injury, carefully read, understand, and observe all instructions described in this manual.
- Wacker Neuson expressly reserves the right to make technical modifications, even without notice, which improve the performance or safety standards of its machines.
- The information contained in this manual is based on machines manufactured up until the time of publication. Wacker Neuson reserves the right to change any portion of this information without notice.
- The illustrations, parts, and procedures in this manual refer to Wacker Neuson factory-installed components. Your machine may vary depending on the requirements of your specific region.

CALIFORNIA Proposition 65 Warning

Engine exhaust, some of its constituents, and certain vehicle components contain or emit chemicals known to the State of California to cause cancer and birth defects or other reproductive harm.

Laws pertaining to spark arresters

NOTICE: State Health Safety Codes and Public Resources Codes specify that in certain locations spark arresters be used on internal combustion engines that use hydrocarbon fuels. A spark arrester is a device designed to prevent accidental discharge of sparks or flames from the engine exhaust. Spark arresters are qualified and rated by the United States Forest Service for this purpose. In order to comply with local laws regarding spark arresters, consult the engine distributor or the local Health and Safety Administrator.

Manufacturer's approval

This manual contains references to *approved* parts, attachments, and modifications. The following definitions apply:

- **Approved parts or attachments** are those either manufactured or provided by Wacker Neuson.
- **Approved modifications** are those performed by an authorized Wacker Neuson service center according to written instructions published by Wacker Neuson.
- **Unapproved parts, attachments, and modifications** are those that do not meet the approved criteria.

Unapproved parts, attachments, or modifications may have the following consequences:

- Serious injury hazards to the operator and persons in the work area
- Permanent damage to the machine which will not be covered under warranty

Contact your Wacker Neuson dealer immediately if you have questions about approved or unapproved parts, attachments, or modifications.

Foreword **3**

1 Safety Information **9**

1.1 Signal Words Used in this Manual ... 9
1.2 Machine Description and Intended Use ... 10
1.3 Safety Guidelines for Operating the Machine ... 11
1.4 Service Safety ... 13
1.5 Operator Safety while Using Internal Combustion Engines ... 15
1.6 Safety Guidelines for Towing the Machine ... 16
1.7 State Regulations Concerning Trailers ... 17
1.8 Reporting Safety Defects ... 17

2 Labels **18**

2.1 Label Locations ... 18
2.2 Label Locations ... 19

3 Lifting and Transporting **24**

3.1 Lifting the Machine ... 24
3.2 Before Towing Checklist ... 25
3.3 Towing the Machine ... 26
3.4 Preparing the Machine for Transport on a Truck or Trailer ... 27
3.5 Tires ... 28
3.6 Wheels and Lug Nuts ... 28
3.7 Safety Chains ... 29
3.8 Lights ... 30

4 Operation **31**

4.1 Preparing the Machine for First Use ... 31
4.2 Machine Components ... 32
4.3 Machine Components Descriptions ... 33
4.4 Recommended Fuel ... 34
4.5 Refueling the Machine ... 35
4.6 Engine Control Panel ... 36
4.7 Positioning and Preparing the Machine for Operation ... 37
4.8 Before Starting the Machine ... 40
4.9 Starting, Operating, and Stopping the Machine ... 41
4.10 Setting Up and Using the Automatic Start/Stop Capabilities ... 43
4.11 Emergency Shutdown Procedure ... 45

4.12 Automatic Shut-down System 45

5 General Maintenance 46

5.1 Maintaining the Emission Control System 46
5.2 Periodic Maintenance Schedule 47
5.3 Maintaining the Trailer 48
5.4 Checking the Pump Housing Mounting Bolts 48
5.5 Checking and Changing the Mechanical Seal Oil 49
5.6 Checking and Changing the Bearing Housing Oil 51
5.7 Inspecting the Impeller 52
5.8 Maintaining the Battery 53
5.9 Storage 54
5.10 Machine Disposal / Decommissioning 55

6 Engine Maintenance: T4i Yanmar 4TNV88-BDSA 56

7 Engine Maintenance: John Deere 4045TF280/290 58

8 Troubleshooting 62

9 Technical Data—APT 4 and APT 4S, Yanmar 63

9.1 Engine: Yanmar 63
9.2 Pump 64
9.3 Lubrication 64
9.4 Trailer and Skid 64
9.5 Pump Performance Curve 65
9.6 Dimensions 66

10 Technical Data—APT 6T and APT 6S, John Deere 67

10.1 Engine: John Deere 67
10.2 Pump 68
10.3 Lubrication 68
10.4 Trailer and Skid 68
10.5 Pump Performance Curve 69
10.6 Dimensions 70

11 Technical Data—APT 8T and APT 8S, John Deere 71

11.1 Engine: John Deere 71
11.2 Pump 72
11.3 Lubrication 72
11.4 Trailer and Skid 72
11.5 Pump Performance Curve 73
11.6 Dimensions 74

Tire Safety Information 75

12 AEM Safety Manual 87

13 Schematics 99

13.1 Engine Wiring 100
13.2 Engine Wiring Components 101

1 Safety Information

1.1 Signal Words Used in this Manual

This manual contains DANGER, WARNING, CAUTION, *NOTICE,* and NOTE signal words which must be followed to reduce the possibility of personal injury, damage to the equipment, or improper service.

This is the safety alert symbol. It is used to alert you to potential personal hazards.

► Obey all safety messages that follow this symbol.

DANGER
DANGER indicates a hazardous situation which, if not avoided, will result in death or serious injury.

► To avoid death or serious injury from this type of hazard, obey all safety messages that follow this signal word.

WARNING
WARNING indicates a hazardous situation which, if not avoided, could result in death or serious injury.

► To avoid possible death or serious injury from this type of hazard, obey all safety messages that follow this signal word.

CAUTION
CAUTION indicates a hazardous situation which, if not avoided, could result in minor or moderate injury.

► To avoid possible minor or moderate injury from this type of hazard, obey all safety messages that follow this signal word.

NOTICE: Used without the safety alert symbol, NOTICE indicates a situation which, if not avoided, could result in property damage.

Note: *A Note contains additional information important to a procedure.*

1.2 Machine Description and Intended Use

This machine is a centrifugal trash pump. The Wacker Neuson Trash Pump consists of a skid or trailer with integral fuel tank onto which are mounted a diesel engine with an air compressor and an impeller pump with ports for water suction and discharge.The pump is self priming; a compressor / venturi system creates a vacuum in the suction chamber allowing atmospheric pressure to push water into the impeller inlet. The engine rotates the impeller during operation. Waste water is drawn into the pump through the suction port and expelled through the discharge port. The operator connects hoses to the pump and routes them so that water and solids are drained from the work area and discharged into an appropriate location.

This machine is intended to be used for general de-watering applications. This machine is intended for the pumping of clear water, or water containing solids up to the size stated within the product specifications; and up to the flow, head, and suction lift limits also stated within the product specifications.

This machine has been designed and built strictly for the intended use described above. Using the machine for any other purpose could permanently damage the machine or seriously injure the operator or other persons in the area. Machine damage caused by misuse is not covered under warranty.

The following are some examples of misuse:

- Pumping flammable, explosive, or corrosive fluids
- Pumping hot or volatile fluids that result in pump cavitation
- Operating the pump outside of product specifications due to incorrect diameter hoses, incorrect length hoses, other inlet or outlet restrictions, or excessive suction lift or head
- Using the machine as a ladder, support, or work surface
- Using the machine to carry or transport passengers or equipment
- Operating the machine outside of factory specifications
- Operating the machine in a manner inconsistent with all warnings found on the machine and in the Operator’s Manual

---

This machine has been designed and built in accordance with the latest global safety standards. It has been carefully engineered to eliminate hazards as far as practicable and to increase operator safety through protective guards and labeling. However, some risks may remain even after protective measures have been taken. They are called residual risks. On this machine, they may include exposure to:

- Heat, noise, exhaust, and carbon monoxide from the engine
- Fire hazards from improper refueling techniques
- Fuel and its fumes
- Personal injury from improperly lifting the trailer tongue
- Projectile hazard from discharge
- Crushing hazards from a tipping or falling pump (placing the vibrating pump on an uneven surface or near the edge of a trench increases the risk of the pump falling over)
- Typical hazards related to towing a trailer on roads and highways

To protect yourself and others, make sure you thoroughly read and understand the safety information presented in this manual before operating the machine.

1.3 Safety Guidelines for Operating the Machine

Operator training

Before operating the machine:

- Read and understand the operating instructions contained in all manuals delivered with the machine.
- Familiarize yourself with the location and proper use of all controls and safety devices.
- Contact Wacker Neuson for additional training if necessary.

When operating this machine:

- Do not allow improperly trained people to operate the machine. People operating the machine must be familiar with the potential risks and hazards associated with it.

Operator qualifications

Only trained personnel are permitted to start, operate, and shut down the machine. They also must meet the following qualifications:

- have received instruction on how to properly use the machine
- are familiar with required safety devices

The machine must not be accessed or operated by:

- children
- people impaired by alcohol or drugs

Application area

Be aware of the application area.

- Keep unauthorized personnel, children, and pets away from the machine.
- Remain aware of changing positions and the movement of other equipment and personnel in the application area/job site.
- Identify whether special hazards exist in the application area, such as toxic gases, or unstable ground conditions, and take appropriate action to eliminate the special hazards before using the machine.

Be aware of the application area.

- Do not operate the machine in areas that contain flammable objects, fuels, or products that produce flammable vapors.

Safety devices, controls, and attachments

Only operate the machine when:

- All safety devices and guards are in place and in working order.
- All controls operate correctly.
- The machine is set up correctly according to the instructions in the Operator's Manual.
- The machine is clean.
- The machine's labels are legible.

To ensure safe operation of the machine:

- Do not operate the machine if any safety devices or guards are missing or inoperative.

- Do not modify or defeat the safety devices.
- Only use accessories or attachments that are approved by Wacker Neuson.

Safe operating practices

When operating this machine:

- Remain aware of the machine's moving parts. Keep hands, feet, and loose clothing away from the machine's moving parts.

When operating this machine:

- Do not operate a machine in need of repair.
- Do not consume the operating fluids used in this machine. Depending on your machine model, these operating fluids may include water, wetting agents, fuel (gasoline, diesel, kerosene, propane, or natural gas), oil, coolant, hydraulic fluid, heat transfer fluid (propylene glycol with additives), battery acid, or grease.

Personal Protective Equipment (PPE)

Wear the following Personal Protective Equipment (PPE) while operating this machine:

- Close-fitting work clothes that do not hinder movement
- Safety glasses with side shields
- Hearing protection
- Safety-toed footwear

Safe operating practices

- Do not loosen or remove inlet or discharge hose fittings when the pump is hot. Hot water inside could be pressurized much like the radiator on an automobile. Allow the pump to cool to the touch before loosening the plug and before loosening or removing the inlet or discharge hose fittings.
- Do not position the pump on a loose, uneven, or unstable surface where it can tip, roll, slide or fall! The pump must be secure before operating. Position the pump on a firm, flat surface; adjust the skid or the trailer jacks to be sure the pump is level and supported firmly.
- Do not block or restrict flow from the inlet line or the discharge line. Remove kinks from the discharge line before starting the pump. Operation with a blocked inlet line or discharge line can cause water inside the pump to overheat.
- Do not reach into or insert anything into the pump while the engine is on! The impeller inside the pump housing is turning at all times while the engine is running.
- Do not allow anyone to stand in front of the discharge port when starting the engine or while priming the pump! The sudden out-rush of water could push or knock a person down.
- Always make sure the hose connections on the pump are tight. A loose connection could cause water to spray or result in a hose falling off the pump while it is in operation.
- Always make sure the water stream from the pump discharge is not directed in such a way so as to cause erosion to the surrounding ground or damage or weakening of nearby structures!

1.4 Service Safety

Service training

Before servicing or maintaining the machine:

- Read and understand the instructions contained in all manuals delivered with the machine.
- Familiarize yourself with the location and proper use of all controls and safety devices.
- Only trained personnel shall troubleshoot or repair problems occurring with the machine.
- Contact Wacker Neuson for additional training if necessary.

When servicing or maintaining this machine:

- Do not allow improperly trained people to service or maintain the machine. Personnel servicing or maintaining the machine must be familiar with the associated potential risks and hazards.

Precautions

Follow the precautions below when servicing or maintaining the machine.

- Read and understand the service procedures before performing any service to the machine.
- All adjustments and repairs must be completed before operating the machine. Do not operate the machine with a known problem or deficiency.
- All repairs and adjustments shall be completed by a qualified technician.
- Turn off the machine before performing maintenance or making repairs.
- Remain aware of the machine's moving parts. Keep hands, feet, and loose clothing away from the machine's moving parts.
- Re-install the safety devices and guards after repair and maintenance procedures are complete.

Machine modifications

When servicing or maintaining the machine:

- Use only accessories/attachments that are approved by Wacker Neuson.

When servicing or maintaining the machine:

- Do not defeat safety devices.
- Do not modify the machine without the express written approval of Wacker Neuson.

Replacing parts and labels

- Replace worn or damaged components.
- Replace all missing and hard-to-read labels.
- When replacing electrical components, use components that are identical in rating and performance to the original components.
- When replacement parts are required for this machine, use only Wacker Neuson replacement parts or those parts equivalent to the original in all types of specifications, such as physical dimensions, type, strength, and material.

Cleaning

When cleaning and servicing the machine:

- Keep the machine clean and free of debris such as leaves, paper, cartons, etc.
- Keep the labels legible.

When cleaning the machine:

- Do not clean the machine while it is running.
- Never use gasoline or other types of fuels or flammable solvents to clean the machine. Fumes from fuels and solvents can become explosive.

Personal Protective Equipment (PPE)

Wear the following Personal Protective Equipment (PPE) while servicing or maintaining this machine:

- Close-fitting work clothes that do not hinder movement
- Safety glasses with side shields
- Hearing protection
- Safety-toed footwear

In addition, before servicing or maintaining the machine:

- Tie back long hair.
- Remove all jewelry (including rings).

After use

- Stop the engine when the machine is not being operated.
- Close the fuel valve on engines equipped with one when the machine is not being operated.
- Ensure that the machine will not tip over, roll, slide, or fall when not being operated.
- Store the machine properly when it is not being used. The machine should be stored in a clean, dry location out of the reach of children.

1.5 Operator Safety while Using Internal Combustion Engines

WARNING
Internal combustion engines present special hazards during operation and fueling. Failure to follow the warnings and safety standards could result in severe injury or death.

► Read and follow the warning instructions in the engine owner's manual and the safety guidelines below.

DANGER
Exhaust gas from the engine contains carbon monoxide, a deadly poison. Exposure to carbon monoxide can kill you in minutes.

► NEVER operate the machine inside an enclosed area, such as a tunnel, unless adequate ventilation is provided through such items as exhaust fans or hoses.

Operating safety

When running the engine:

- Keep the area around exhaust pipe free of flammable materials.
- Check the fuel lines and the fuel tank for leaks and cracks before starting the engine. Do not run the machine if fuel leaks are present or the fuel lines are loose.

When running the engine:

- Do not smoke while operating the machine.
- Do not run the engine near sparks or open flames.
- Do not touch the engine or muffler while the engine is running or immediately after it has been turned off.
- Do not operate a machine when its fuel cap is loose or missing.
- Do not start the engine if fuel has spilled or a fuel odor is present. Move the machine away from the spill and wipe the machine dry before starting.

Refueling safety

When refueling the engine:

- Clean up any spilled fuel immediately.
- Refill the fuel tank in a well-ventilated area.
- Re-install the fuel tank cap after refueling.
- Use suitable tools for refueling (for example, a fuel hose or funnel).

When refueling the engine:

- Do not smoke.
- Do not refuel a hot or running engine.
- Do not refuel the engine near sparks or open flames.

1.6 Safety Guidelines for Towing the Machine

WARNING
Risk of severe injury or death. Improper trailer condition and towing technique can lead to an accident.

► Obey the trailer manufacturer's instructions and the instructions below to reduce the risk of an accident.

When towing the machine:

- Do not tow the machine if the towing vehicle's hitch or the trailer's coupler are damaged.
- Do not tow the machine if any of the trailer's lug nuts are missing.
- Do not tow the machine if the trailer's tires have less than 1.5 mm (1/16 inch) of tread.
- Do not tow the machine unless the trailer's brakes are functioning properly.
- Do not exceed the trailer manufacturer's speed limitations.

When towing the machine:

- Only tow the machine when the trailer's lug nuts are properly torqued.
- Only tow the machine when the trailer's tires are properly inflated.
- Only tow the machine when all trailer lights are functioning correctly.
- Only tow the machine when the trailer's safety chains are connected to the towing vehicle in a crisscross pattern.
- Maintain extra distance between the towing vehicle and other vehicles.
- Avoid soft shoulders, curbs, and sudden lane changes.
- Abide by all licensing requirements for your area.

If you have not driven a towing vehicle with trailer before, practice turning, stopping, and backing up the towing vehicle with trailer in an area away from traffic. Only drive the towing vehicle with trailer when you are confident in your ability to do so.

1.7 State Regulations Concerning Trailers

Trailer laws covering such things as brakes, lights, safety chains, etc., will vary from state to state. Make certain that your trailer is in compliance with the regulations of the state in which the trailer will be used. If you are not sure what these regulations are, contact the state motor vehicle department for information.

In some states, trailers must be registered and licensed by the State Department of Transportation. Before towing, be sure to check licensing requirements.

1.8 Reporting Safety Defects

If you believe your trailer has a defect which could cause a crash or could cause injury or death, you should immediately inform the National Highway Traffic Safety Administration (NHTSA) in addition to notifying Wacker Neuson.

If NHTSA receives similar complaints, it may open an investigation; and if it finds that a safety defect exists in a group of trailers, it may order a recall and remedy campaign. However, NHTSA cannot become involved in individual problems between you, your dealer, or Wacker Neuson.

To contact NHTSA, you may either contact the Vehicle Safety Hotline toll-free at 1-888-327-4236 (TTY: 1-800-424-9153); go to http://www.safercar.gov; or write to:

Administrator
NHTSA
1200 New Jersey Avenue S.E.
Washington, DC 20590

You can also obtain other information about your motor vehicle safety from http://www.safercar.gov

2 Labels

2.1 Label Locations

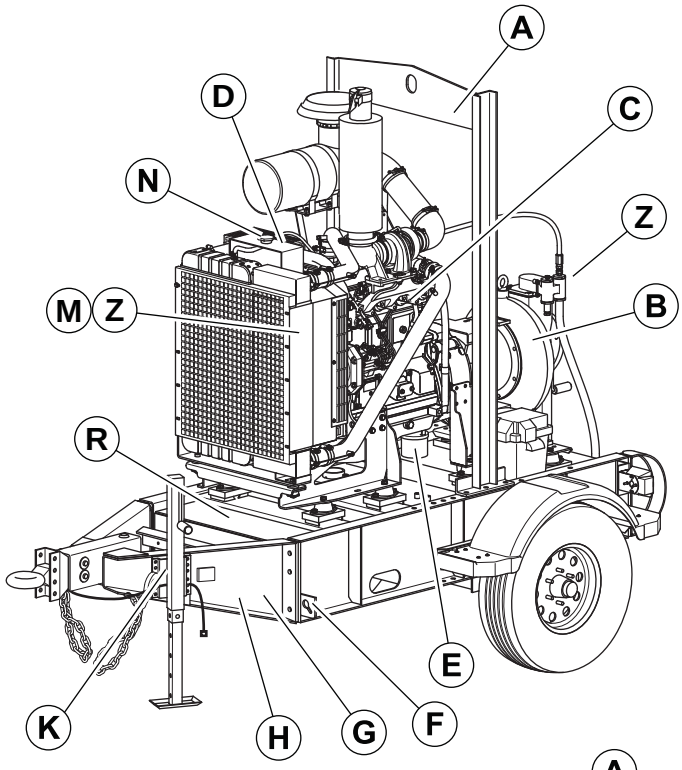

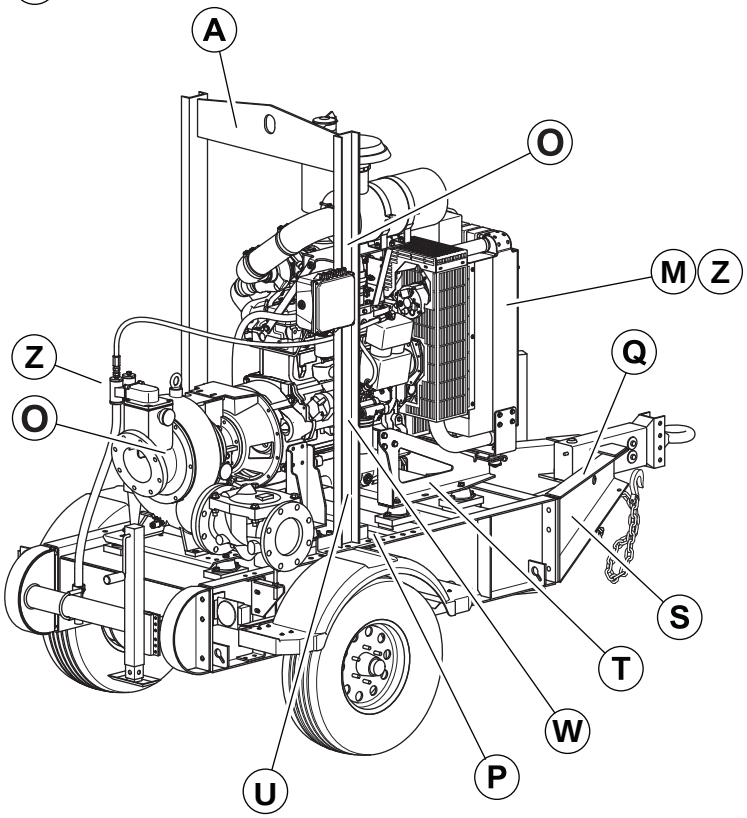

wc_gr011979

2.2 Label Locations

A	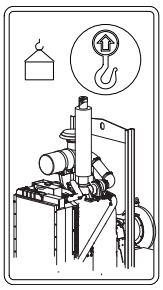	Lifting point
B	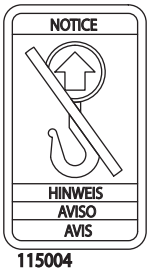 115004	NOTICE Not a lifting point
C		WARNING Operation of this equipment may create sparks that can start fires around dry vegetation. A spark arrester may be required. The operator should contact local fire agencies for laws or regulations relating to fire prevention requirements.
D	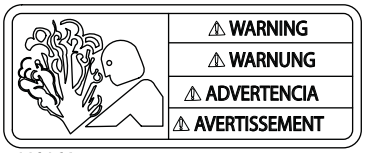 110164 110164	WARNING Pressurized contents. Do not open when hot!
E	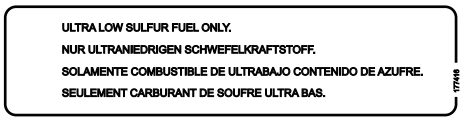	Low sulfur fuel or ultra low sulfur fuel only
F	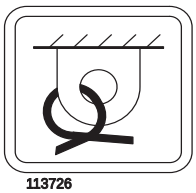 113726	Tie-down point

G	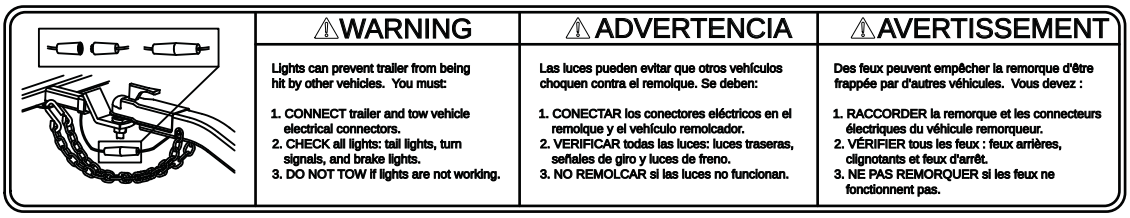 WARNING (On trailer, if equipped) ALWAYS use safety chains. Chains hold trailer if connection fails. You must: 1. CROSS chains underneath coupler. 2. ALLOW slack for trailer to turn. 3. ATTACH chain hooks securely to tow vehicle.	
H	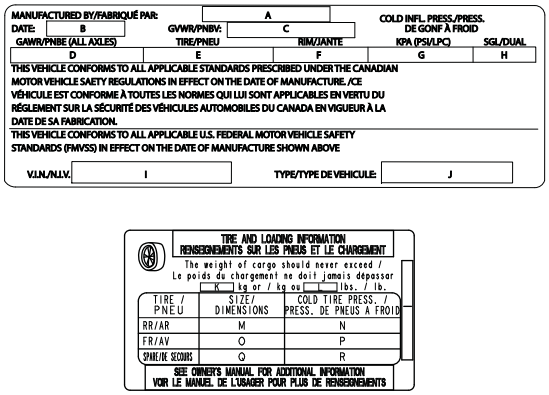	(On trailer, if equipped) Certification Label (VIN Number) Also attached to each unit is a Certification Label. This label specifies that the trailer conforms with all Federal Motor Vehicle Standards in effect at the time of manufacture. The label includes the Vehicle Identification Number (VIN) for the trailer.
K	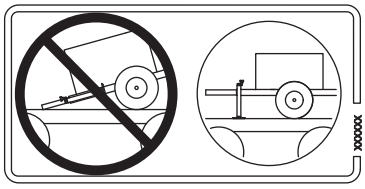	Transport position of the jack and machine

M	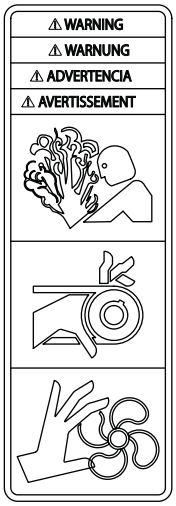 178775	WARNING ■ Pressurized contents. Do not open when hot! ■ Pinching / cutting hazards. ■ Rotating machinery.
N	Coolant overflow bottle only, not a return system. Nur Kühlmittelüberläufflasche – kein Rückholsystem! Botella de rebose del enfriador solamente – no es un sistema de retorno. Bouteille de trop-plein de l´agent réfrigérant seulement: ce n´est pas un système de retour. 176105	Coolant overflow bottle only, not a return system.
O	 151049	WARNING Never pump volatile, flammable, or low-flash-point fluids. These fluids could ignite or explode.
P	 119050	DANGER Asphyxiation hazard. ■ Engines emit carbon monoxide. ■ Do not run the machine indoors or in an enclosed area. ■ NEVER use inside a home or garage, EVEN IF doors and windows are open. ■ Only use OUTSIDE and far away from windows, doors, and vents. ■ Read the Operator's Manual. ■ No sparks, flames, or burning objects near the machine. ■ Stop the engine before refueling. ■ Use only clean, filtered diesel fuel.

Q

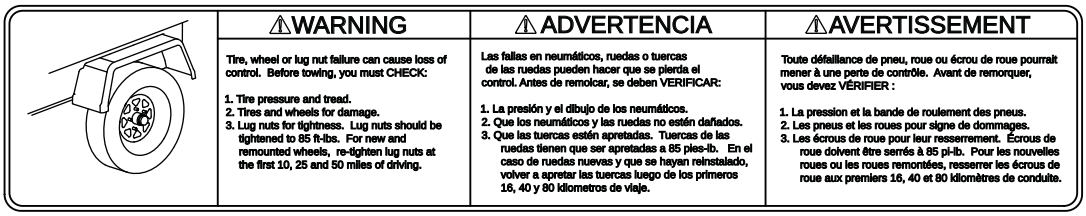

⚠WARNING	⚠ ADVERTENCIA	⚠AVERTISSEMENT
Tire, wheel or lug nut failure can cause loss of control. Before towing, you must CHECK: 1. Tire pressure and tread. 2. Tires and wheels for damage. 3. Lug nuts for tightness. Lug nuts should be tightened to 85 ft-lbs. For new and remounted wheels, re-tighten lug nuts at the first 10, 25 and 50 miles of driving.	Las fallas en neumáticos, ruedas o tuercas de las ruedas pueden hacer que se pierda el control. Antes de remolcar, se deben VERIFICAR: 1. La presión y el dibujo de los neumáticos. 2. Que los neumáticos y las ruedas no estén dañados. 3. Que las tuercas estén apretadas. Tuercas de las ruedas tienen que ser apretadas a 85 pies-lb. En el caso de ruedas nuevas y que se hayan reinstalado, volver a apretar las tuercas luego de los primeros 16, 40 y 80 kilometros de viaje.	Toute défaillance de pneu, roue ou écrou de roue pourrait mener à une perte de contrôle. Avant de remorquer, vous devez VÉRIFIER : 1. La pression et la bande de roulement des pneus. 2. Les pneus et les roues pour signe de dommages. 3. Les écrous de roue pour leur resserrement. Écrous de roue doivent être serrés à 85 pi-lb. Pour les nouvelles roues ou les roues remontées, resserrer les écrous de roue aux premiers 16, 40 et 80 kilomètres de conduite.

5200018198

WARNING

(On trailer, if equipped)

Tire, wheel or lug nut failure can cause loss of control. Before towing, you must CHECK:

1. Tire pressure and tread.
2. Tires and wheels for damage.
3. Lug nuts for tightness. Lug nuts should be tightened to 115 Nm (85 ft.lbs.). For new and remounted wheels, retighten lug nuts after the first 10, 25 and 50 miles of driving.

R

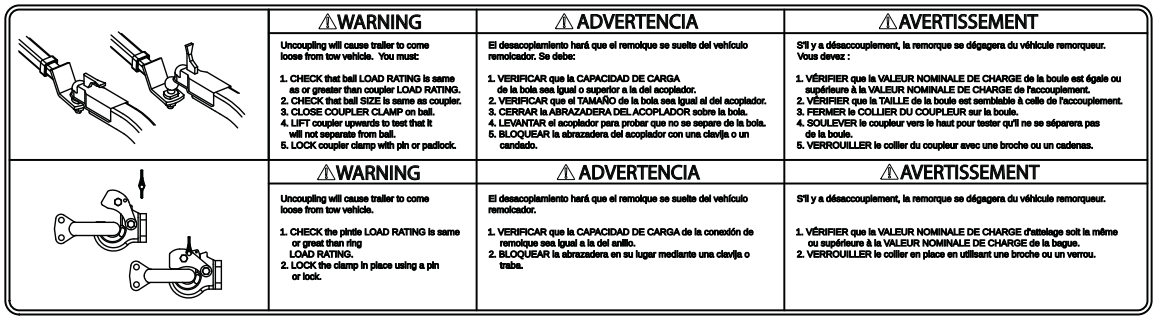

⚠WARNING	⚠ ADVERTENCIA	⚠AVERTISSEMENT
Uncoupling will cause trailer to come loose from tow vehicle. You must: 1. CHECK that ball LOAD RATING is same as or greater than coupler LOAD RATING. 2. CHECK that ball SIZE is same as coupler. 3. CLOSE COUPLER CLAMP on ball. 4. LIFT coupler upwards to test that it will not separate from ball. 5. LOCK coupler clamp with pin or padlock.	El desacoplamiento hará que el remolque se suelte del vehículo remolcador. Se debe: 1. VERIFICAR que la CAPACIDAD DE CARGA de la bola sea igual o superior a la del acoplador. 2. VERIFICAR que el TAMAÑO de la bola sea igual el del acoplador. 3. CERRAR la ABRAZADERA DEL ACOPLADOR sobre la bola. 4. LEVANTAR el acoplador para probar que no se separe de la bola. 5. BLOQUEAR la abrazadera del acoplador con una clavija o un candado.	S'il y a désaccouplement, la remorque se dégagera du véhicule remorqueur. Vous devez : 1. VÉRIFIER que la VALEUR NOMINALE DE CHARGE de la boule est égale ou supérieure à la VALEUR NOMINALE DE CHARGE de l'accouplement. 2. VÉRIFIER que la TAILLE de la boule est semblable à celle de l'accouplement. 3. FERMER le COLLIER DU COUPLEUR sur la boule. 4. SOULEVER le coupleur vers le haut pour tester qu'il ne se séparera pas de la boule. 5. VERROUILLER le collier du coupleur avec une broche ou un cadenas.
⚠WARNING	⚠ ADVERTENCIA	⚠AVERTISSEMENT
Uncoupling will cause trailer to come loose from tow vehicle. 1. CHECK the pintle LOAD RATING is same or great than ring LOAD RATING. 2. LOCK the clamp in place using a pin or lock.	El desacoplamiento hará que el remolque se suelte del vehículo remolcador. 1. VERIFICAR que la CAPACIDAD DE CARGA de la conexión de remolque sea igual a la del anillo. 2. BLOQUEAR la abrazadera en su lugar mediante una clavija o traba.	S'il y a désaccouplement, la remorque se dégagera du véhicule remorqueur. 1. VÉRIFIER que la VALEUR NOMINALE DE CHARGE d'attelage soit la même ou supérieure à la VALEUR NOMINALE DE CHARGE de la bague. 2. VERROUILLER le collier en place en utilisant une broche ou un verrou.

5200018199

WARNING

(On trailer, if equipped)

Uncoupling will cause trailer to come loose from tow vehicle. You must:

1. CHECK that ball LOAD RATING is same as or greater than coupler LOAD RATING.
2. CHECK that ball SIZE is same as coupler.
3. CLOSE COUPLER CLAMP on ball.
4. LIFT coupler upwards to test that it will not separate from ball.
5. LOCK coupler clamp with pin or padlock.

WARNING

Uncoupling will cause trailer to come loose from tow vehicle.

1. CHECK that the pintle LOAD RATING is same or greater than ring LOAD RATING.
2. LOCK the clamp in place using a pin or lock.

S	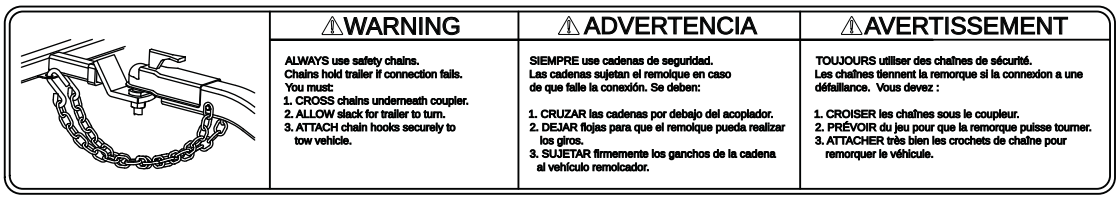 5200008571 WARNING (On trailer, if equipped) ALWAYS use safety chains. Chains hold trailer if connection fails. You must: 1. CROSS chains underneath coupler. 2. ALLOW slack for trailer to turn. 3. ATTACH chain hooks securely to tow vehicle.	
T	 5200005890	WARNING Explosion hazard. Do not use evaporative starting fluids such as ether on this engine. The engine is equipped with a cold starting aid. Using evaporative starting fluids can cause an explosion which can cause engine damage, personal injury, or death. Read and follow the engine starting instructions in this Operator's Manual.
U	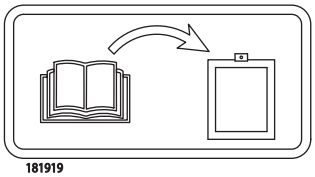 181919	Storage location of Operator’s Manual. The Operator’s Manual should be stored on the machine.
W	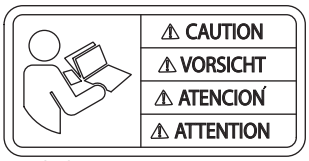 110167	CAUTION Read and understand the supplied Operator’s Manual before operating this machine. Failure to do so increases the risk of injury to yourself and others.
Z	 0115415	WARNING Hot surface

3 Lifting and Transporting

3.1 Lifting the Machine

Requirements

- Lifting equipment (crane, hoist, or fork truck) capable of supporting the machine's weight
- Lifting devices (hooks, chains, and shackles) capable of supporting the machine's weight
- Engine stopped

Lifting the machine

A lifting eye is used for lifting the machine.

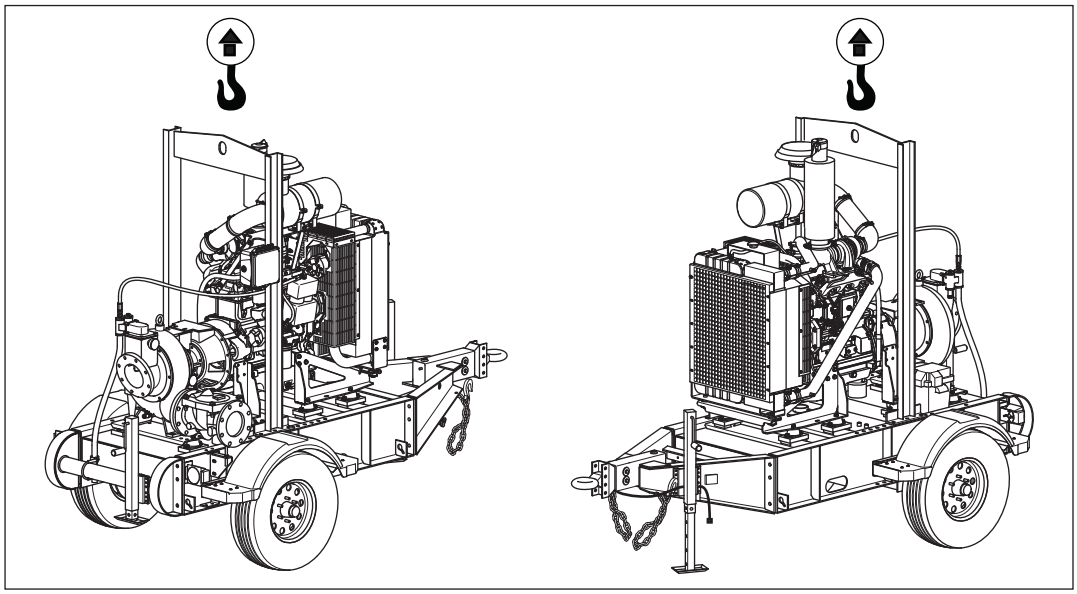

wc_gr011980

Perform the procedure below to lift the machine.

1. Attach the lifting devices and equipment to the lifting eye. Do not attach lifting devices to any other part of the machine.
2. Lift the machine a small distance.

WARNING
Crushing hazard. An unstable machine may cause the lifting devices and equipment to fail. You may be crushed if the lifting devices and equipment fail.

► Check for stability before continuing.

3. Check for stability. If necessary, lower the machine, reposition the lifting devices, and lift the machine a small distance again.
4. Continue lifting the machine only when it is stable.

3.2 Before Towing Checklist

Before towing the machine, check the licensing requirements for trailers in your area. Also check the following items:

Towing vehicle

- ☐ Check that the towing vehicle is rated to tow the load.
- ☐ Check that the towing vehicle is in serviceable condition.
- ☐ Do any necessary service/maintenance on the towing vehicle.

Hitch and coupler

- ☐ Check that the towing vehicle and hitch have a rating equal to or greater than the GVWR of the machine. See *Technical Data*.
- ☐ Check that the hitch of the towing vehicle and coupler of the trailer are compatible.
- ☐ Check the condition of both the coupler and the hitch.
- ☐ Check that all fasteners on the coupler are tight.
- ☐ Check that the coupler has fresh grease applied to it.

Wheels

- ☐ Check that wheel chocks are available at the work site.
- ☐ Check that all lug nuts are in place and are properly torqued.
- ☐ Check the tread wear of the tires.
- ☐ Check that the tires are inflated to the proper pressure.

Trailer preparation

- ☐ Check that all doors and access panels are closed and latched.
- ☐ Check that outriggers (if applicable) are retracted.
- ☐ Check local regulations regarding hazardous materials placards. If applicable, install the appropriate placards.

Trailer operation

- ☐ Check that the trailer jacks are in the traveling (fully-retracted) position.
- ☐ Check that the directional and running lights on the trailer function correctly.
- ☐ Check that the safety chains of the trailer are connected to the towing vehicle using a crisscross pattern.
- ☐ Check the operation of the trailer brakes by braking the towing vehicle at a slow speed. Both the vehicle and the trailer must brake smoothly. If the trailer pushes, check the fluid level in the surge brakes or the operation of the electric brakes.
- ☐ Check that the trailer’s breakaway cable (if applicable) is attached to the towing vehicle.
- ☐ Test the function of the breakaway system (if applicable).

3.3 Towing the Machine

Background

The machine's trailer is equipped with safety chains **(a)**, tongue jack **(b)**, lights, and a coupler (pintle or ball-type) **(c)**.

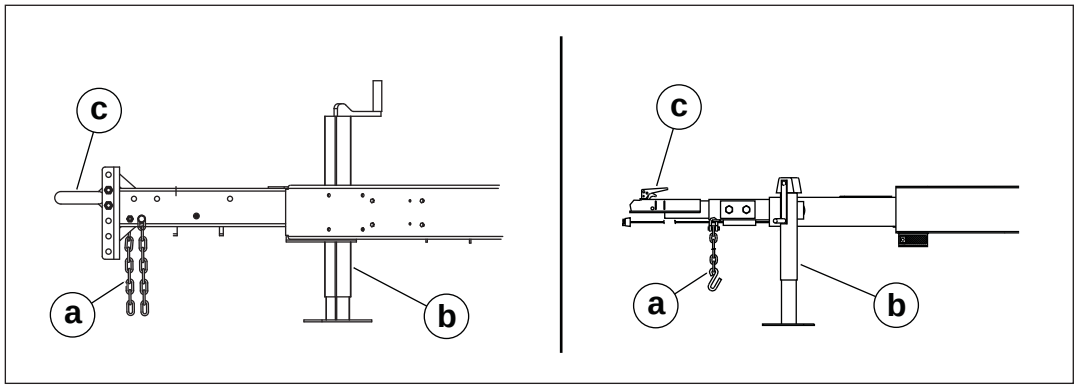

wc_gr011629

Licensing requirements

- In most states, large trailers must be registered and licensed by the State Department of Transportation. Before towing, be sure to check licensing requirements.
- Drivers towing trailers may be required to carry a commercial driver's license (CDL). Check your local and state licensing regulations before towing the generator.

Coupler maintenance

- A film of grease on the coupler will extend coupler life and eliminate squeaking. Wipe the coupler clean and apply fresh grease each time the trailer is towed.

Towing safety

- When towing, maintain extra space between vehicles and avoid soft shoulders, curbs and sudden lane changes. If you have not pulled a trailer before, practice turning, stopping, and backing up in an area away from heavy traffic.
- Do not exceed 55 mph when towing a trailer.

3.4 Preparing the Machine for Transport on a Truck or Trailer

Requirements

- Machine stopped
- Flatbed truck or trailer capable of supporting the machine's weight
- Chains, hooks, or straps capable of supporting the machine's weight

WARNING
Crushing hazard. Improperly securing the machine can lead to a crushing hazard.

► Use only the designated tie-down points to secure the machine to a truck or trailer.

Checklist

Before transporting the machine, check the following items:

- ☐ Check that the transport vehicle or trailer can support the weight of the machine.
- ☐ Check that the transport vehicle or trailer is wide enough to support the machine.
- ☐ Check that the wheels of the transport vehicle or trailer are chocked during the loading process.
- ☐ Check that the transport vehicle or trailer is clean and free of grease, oil, ice, and other loose material.
- ☐ If the machine is mounted to a trailer, do not use the machine's trailer jack to support the trailer tongue during transporting.
- ☐ Check that any ramps used in the loading process:
  - Can support the weight of the machine.
  - Are clean and free of grease, oil, ice, and other loose material.
  - Are securely connected to the transport vehicle or trailer.
  - Are of sufficient length to keep the loading angle 15° or less.

In addition:

- ☐ Check that the loading area is flat and the ground is stable.
- ☐ Check the overall height of the machine once it is loaded on the truck or trailer.
- ☐ Plan your travel route so there will be adequate clearance for overpasses, road signs, buildings, etc.
- ☐ Check local regulations regarding transporting and obey these regulations.

3.5 Tires

WARNING
Under-inflated tires may cause a blowout which could result in fishtailing or loss of control of the towing vehicle.

► Keep the tires properly inflated and make sure they have the proper load rating.

Always maintain full air pressure as indicated by the tire manufacturer on the tire's sidewalls. Check air pressure when the tires are cold, before you move the trailer. When the trailer tires become worn or damaged, replace them promptly with the same type, size, and load capacity as the original tires.

For convenience and safety, it is recommended that you carry a spare wheel and tire.

3.6 Wheels and Lug Nuts

WARNING
Loose or missing lug nuts can cause you to lose a wheel.

► Keep all lug nuts tight.

Before each trip, check for loose or missing lug nuts. When replacing lug nuts, make sure the replacement nut matches the original nut exactly. While the threads of the nut may match, the nut may be a size that does not hold the wheel securely against the hub even when fully tightened. Torque nuts evenly in increments to 115 Nm (85 ft.lbs.).

Note: *During normal use, the lug nuts will seat during the first one hundred miles resulting in a drop in torque. Each nut should be checked at that time and torqued to the proper value.*

3.7 Safety Chains

Safety chains **(a)** on your trailer provide added protection that it will not become separated from the towing vehicle. Make sure the chains are correctly attached between the towing vehicle and the trailer before each trip.

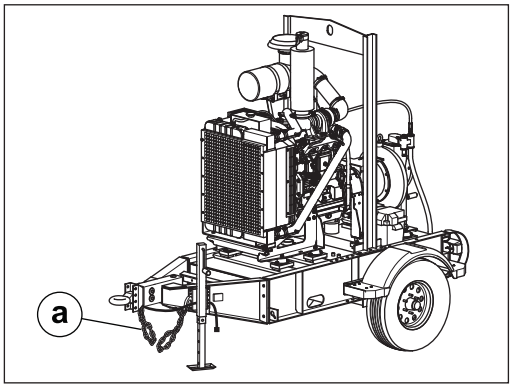

wc_gr011981

WARNING
Possibility of personal injury or equipment damage. Failure to properly attach the safety chains between the trailer and the tow vehicle can result in a runaway trailer, should the coupler and hitch separate while towing.

- ► Properly attach the safety chains between the trailer and tow vehicle.
- ► Do not tow the machine without attaching the safety chains.

Chains should be attached in a crisscross pattern under the trailer tongue. The chains will prevent the trailer tongue from dropping to the ground if the trailer separates from the hitch. Tighten the chains with just enough slack to permit tight turns.

If a chain must be replaced, do not substitute a lighter weight chain. This trailer must be equipped with two chains, each with a minimum breaking strength of no less than the Gross Vehicle Weight Rating (GVWR) of the trailer. All chain attachments, including hooks, must be rated the same as the chain. Replace damaged chains. Do not weld or attempt to repair damaged chains.

3.8 Lights

State and federal regulations require that all types of trailers be equipped with tail, stop and turn lights **(a)**, and side marker lights **(b)**.

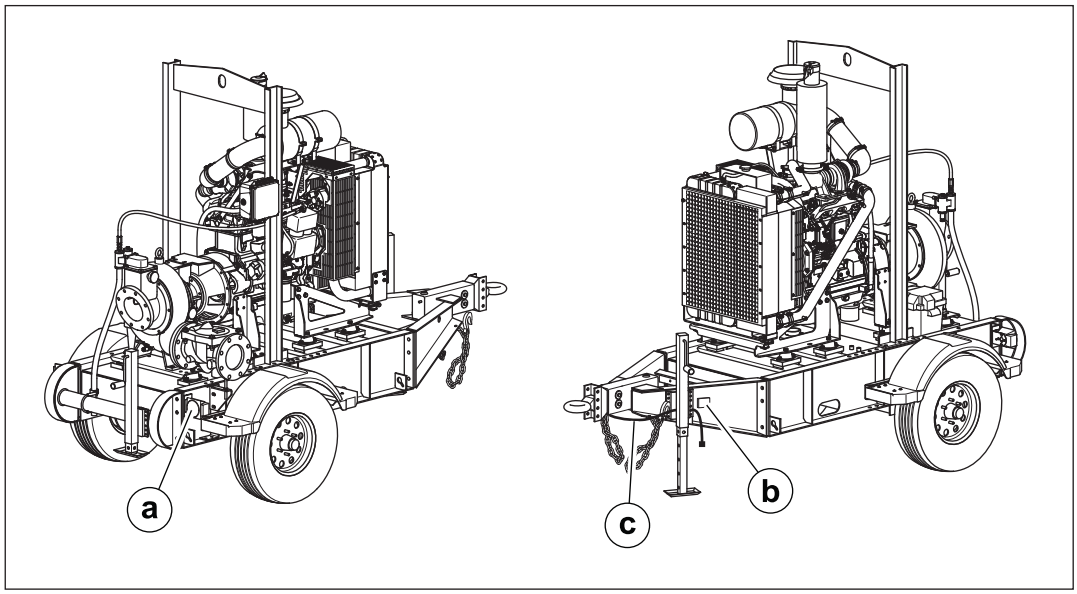

wc_gr011982

A special wiring harness **(c)** for connecting the trailer lights to the lighting system of the tow vehicle is supplied with the trailer.

Note: *Check and make certain that all trailer lights are working before towing the trailer.*

4 Operation

4.1 Preparing the Machine for First Use

1. Make sure all loose packaging materials have been removed from the machine.
2. Check the machine and its components for damage. If there is visible damage, do not operate the machine! Contact your Wacker Neuson dealer immediately for assistance.
3. Take inventory of all items included with the machine and verify that all loose components and fasteners are accounted for.
4. Attach component parts not already attached.
5. Add fluids as needed and applicable, such as fuel and engine oil.
6. Move the machine to its operating location.

4.2 Machine Components

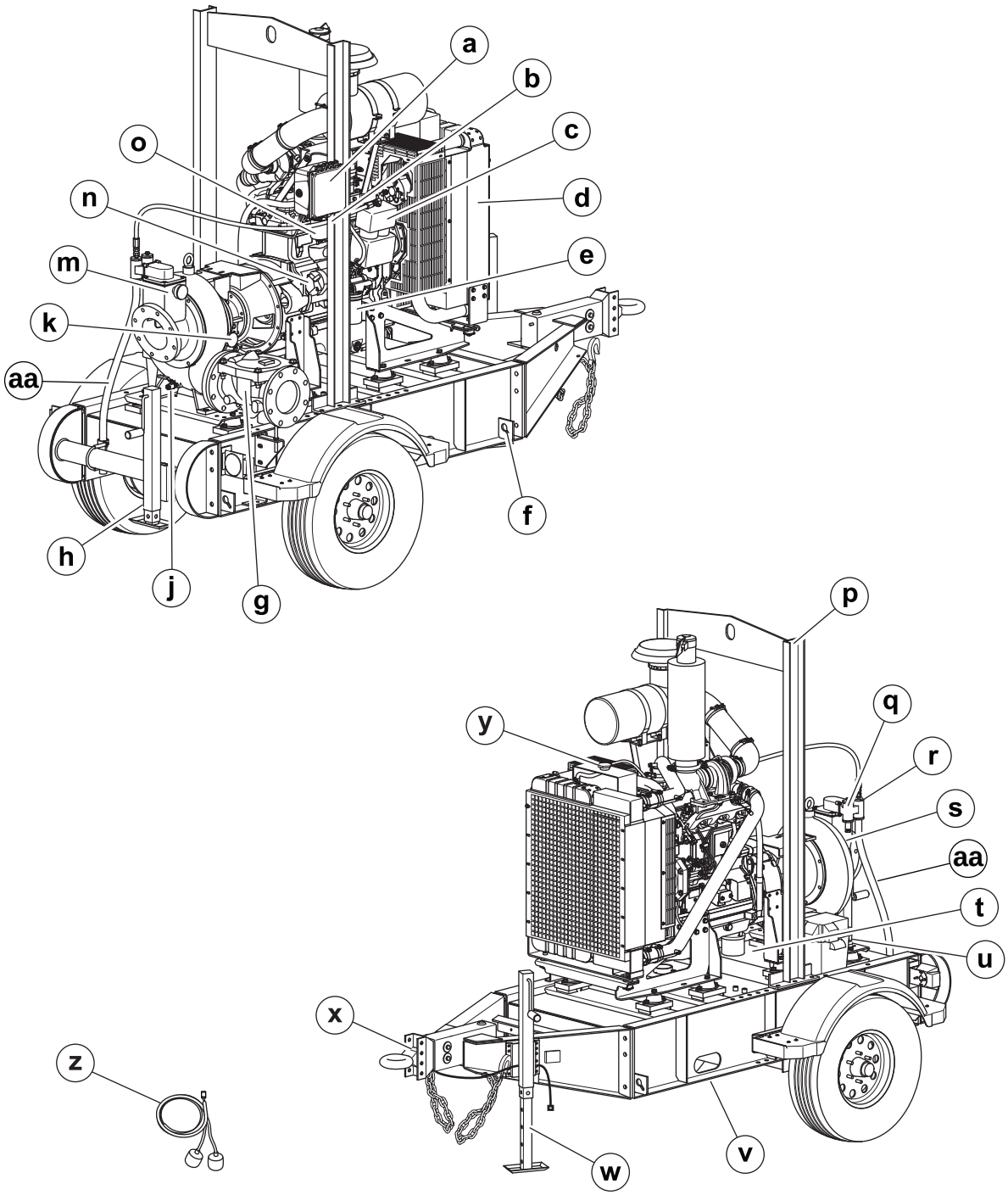

wc_gr011983

4.3 Machine Components Descriptions

Ref.	Description	Ref.	Description
a	Control panel	**p**	Lift bail
b	Throttle	**q**	Backup Venturi primer
c	Air compressor	**r**	Venturi primer
d	Engine	**s**	Pump housing
e	Oil filter	**t**	Fuel tank fill port
f	Tie-downs	**u**	Battery box
g	Discharge check valve	**v**	Fuel tank
h	Rear stabilizer jack	**w**	Tongue jack
j	Volute drain valve	**x**	Hydraulic surge brake actuator (if equipped)
k	Discharge pressure gauge	**y**	Radiator fill
m	Suction vacuum gauge	**z**	Float harness and floats
n	Starter	**aa**	Venturi air discharge hose
o	Fuel filter/Water separator	**—**	—

4.4 Recommended Fuel

Always use the proper fuel for the conditions. Follow the guidelines in the table below.

Model	Recommended fuel	Cetane number (CN)	Sulfur content
APT 4T and APT 4S	Diesel fuel specified to ASTM D975 and EN 590	45 minimum	Low sulfur or Ultra low sulfur
APT 6T and APT 6S	Diesel fuel specified to ASTM D975 and EN 590	43 minimum, 47 preferred for -20°C (-4°F)	Ultra low sulfur
APT 8T and APT 8S	Diesel fuel specified to ASTM D975 and EN 590	43 minimum, 47 preferred for -20°C (-4°F)	Regular sulfur, less than 1000 ppm recommended

NOTICE: Consult the engine owner's manual regarding the use of biodiesel fuel in this machine. Some biodiesel blends may clog the fuel system or gel at cold ambient temperatures sooner than petroleum-based diesel.

CAUTION
Fire hazard.

► Do not use gasoline, crankcase oil, or any oil containing gasoline.

4.5 Refueling the Machine

Requirements

- Machine shut down
- Engine cool
- Machine/fuel tank level with the ground
- Fresh, clean fuel supply

Procedure

Perform the procedure below to refuel the machine.

WARNING
Fire hazard. Fuel and its vapors are extremely flammable. Burning fuel can cause severe burns.

► Keep all sources of ignition away from the machine while refueling.

► Refuel only when the machine is outdoors.

► Clean up spilled fuel immediately.

1. Remove the fuel cap **(a)**.

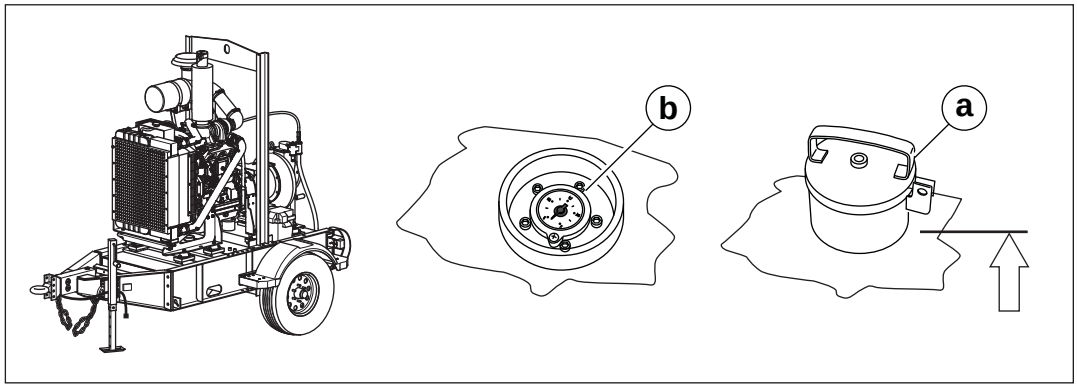

wc_gr011987

2. Fill the fuel tank to the full mark on the fuel gauge **(b)**.

CAUTION
Fire and health hazard. Fuel expands when heated. Expanding fuel in an over-filled tank can lead to spills and leaks.

► Do not overfill the fuel tank.

3. Re-install the fuel cap.

Result

The procedure to refuel the machine is now complete.

4.6 Engine Control Panel

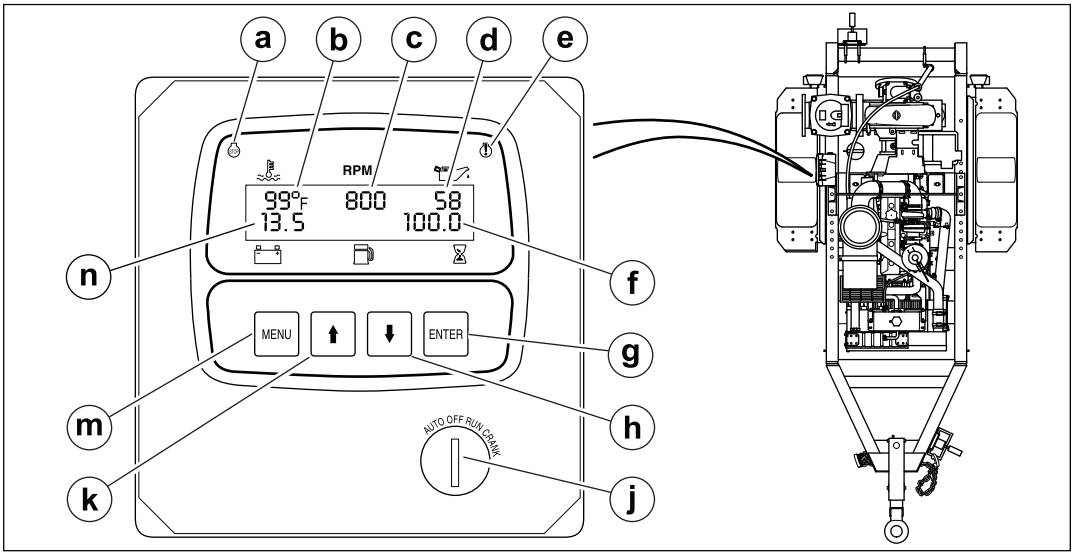

wc_gr012005

Ref.	Description	Ref.	Description
a	Engine shutdown lamp	**g**	Enter key
b	Engine temperature	**h**	Down arrow key
c	Engine speed	**j**	Key switch
d	Oil pressure	**k**	Up arrow key
e	Engine warning lamp	**m**	Menu key
f	Engine hours	**n**	Battery voltage

4.7 Positioning and Preparing the Machine for Operation

WARNING
Personal injury hazard. Failure to follow the listed procedures may cause injury to personnel or damage to the machine.

► All persons setting up the machine must be fully trained on the installation of the machine.

Pre-operation setup

Perform the procedure below to position and prepare the machine for operation.

1. Position the pump as near to the water as possible, on a firm, flat surface. Keep the pump level.
2. Lower the rear stabilizer jack **(a)** until it contacts the ground. Lock it in position with the pin.

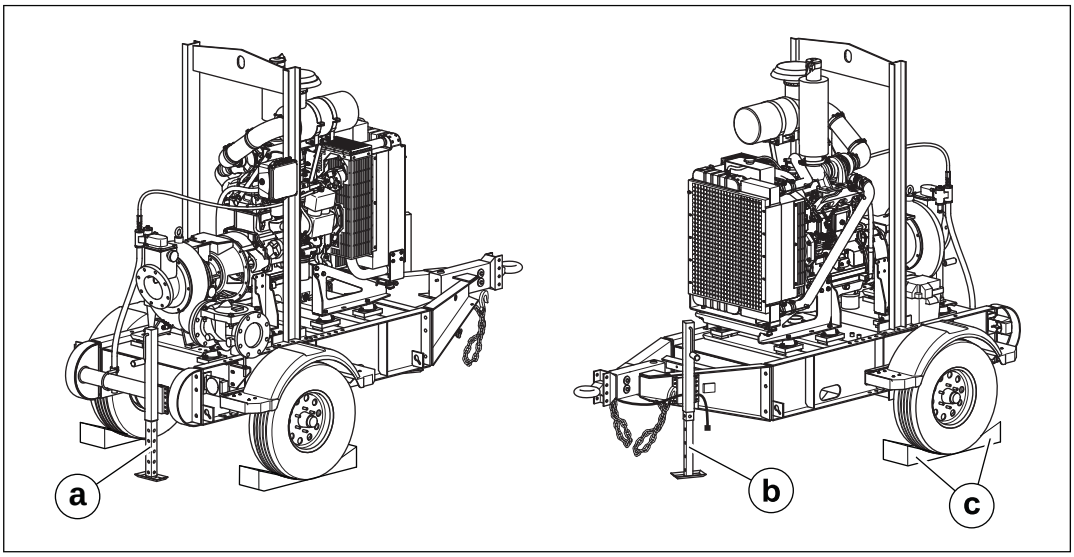

wc_gr012003

3. Lower the front stabilizer jack **(b)** until it contacts the ground. Lock it in position with the pin.
4. Install the wheel chocks **(c)**.

This procedure continues on the next page.

Continued from the previous page.

Connect the suction hose

5. Connect the suction hose **(m)** to the suction port **(e).**

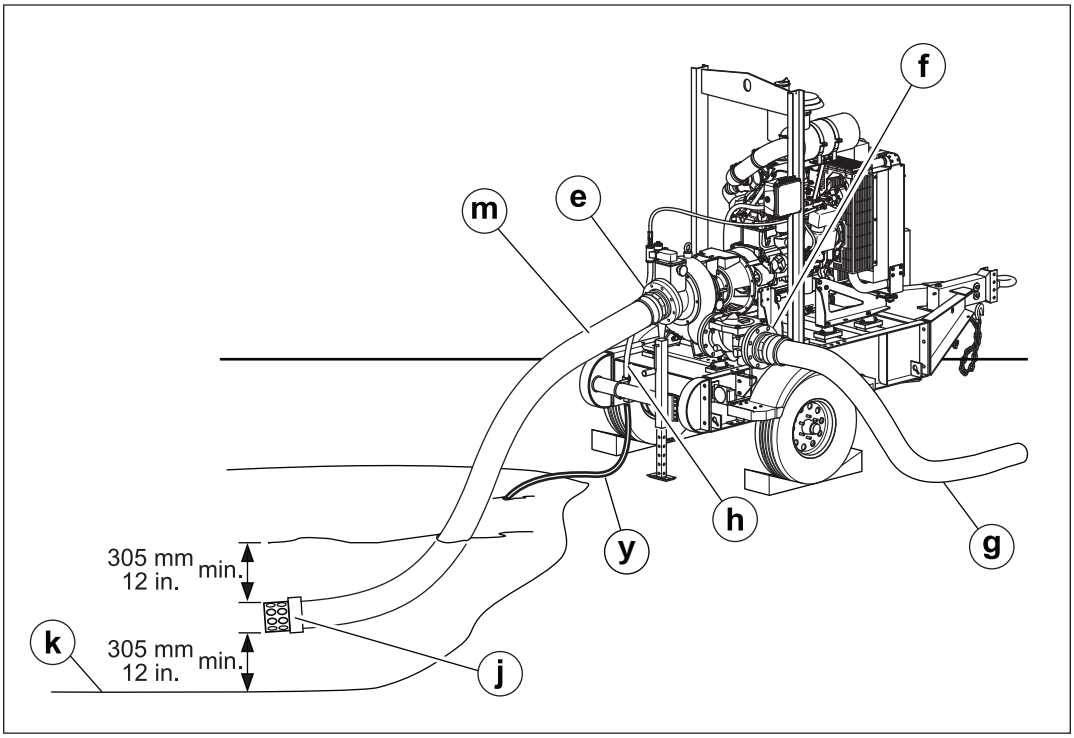

wc_gr012006

- Suction hoses must be rigid enough not to collapse.
- There must be no leaks in the suction line or the pump will not prime.

WARNING
Personal injury hazard. A loose connection between the suction hose and the suction port can result in personal injury should the suction hose break loose while the pump is operating.

► Only operate the machine when the suction hose is securely fastened to the suction port.

Connect the strainer

6. Connect the strainer **(j)** to the suction hose **(m)**.
   - Always use a strainer on the end of the suction hose to prevent pulling in large debris which could clog the pump or jam the impeller.
   - Do not use a strainer with holes larger than the maximum solid-size rating of the pump. See *Technical Data*.

This procedure continues on the next page.

Continued from the previous page.

Submerge the hose

7. Submerge the suction hose **(m)**.
   - Do not place the strainer directly into mud or sand. Always keep the strainer suspended at least 305 mm (12 in.) above the sump elevation **(k)** in the liquid being pumped.
   - Do not place the strainer less than 305 mm (12 in.) below the surface of the liquid being pumped. If the strainer is placed closer to the surface, water begins to form a funnel down to the bottom of the suction line and strainer, allowing the pump to draw in air. The mixture of air and water leads to a condition known as cavitation, which will quickly destroy the impeller and the water chamber inside the pump housing.

Connect the discharge hose(s)

8. Make sure the discharge valve (flapper valve) **(x)** inside the discharge port operates freely.

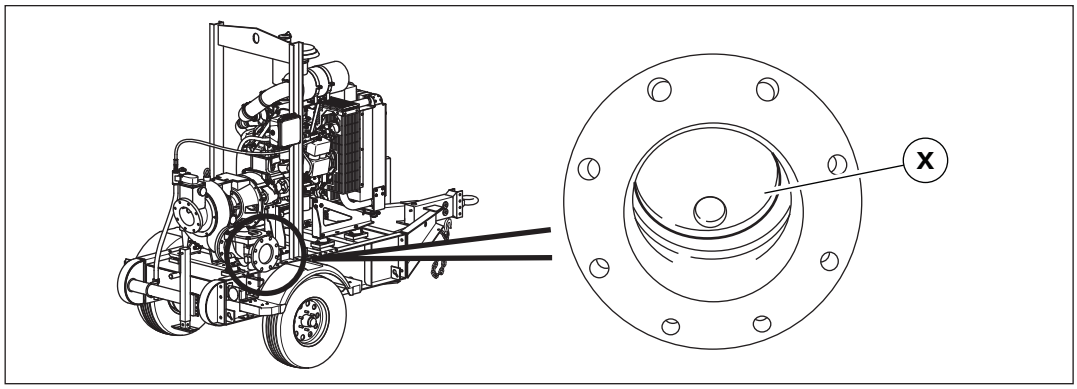

wc_gr012060

9. Connect the discharge hose **(g)** to the discharge port.

Note: *Lay the discharge hose as straight as possible. Avoid sharp bends and turns.*

10. For sewage bypass applications, add an extension **(y)** to the venturi air discharge hose **(h)**. Run the extension back into the sump.

Note: *Routing an air discharge hose back to the liquid being pumped will protect the environment. Check local environmental regulations.*

Prepare for Auto Start

11. If you are using the machine's automatic start capabilities, continue with topic *Setting Up and Using the Automatic Start Capabilities*. If not, continue with topic *Before Starting the Machine*.

4.8 Before Starting the Machine

Before starting the machine, perform each item on the following checklist.

Pre-operation checks

- ☐ Read and understand the engine owner's manual.
- ☐ Review and follow the safety instructions found in the front of this Operator's Manual.

Checking the oil level

- ☐ Check the oil levels by viewing the bearing housing sightglass **(a)** and the mechanical seal sightglass **(b)**.

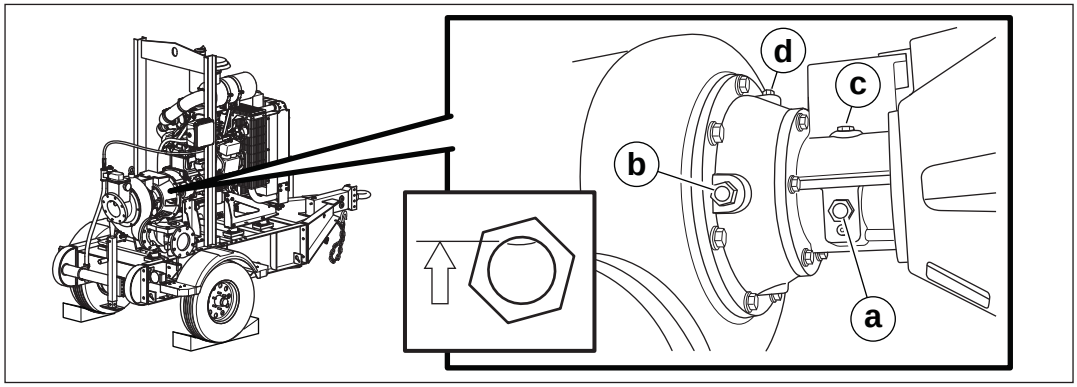

wc_gr012007

Note: *The oil levels should be to the top of the sightglasses.*

NOTICE: Do not operate the pump if water contamination is found in the sightglasses.

Adding oil

1. Remove the appropriate plug **(c** or **d)**.
2. Add oil as required.
   Note: *Only use ISO 68 hydraulic oil in the bearing housing and mechanical seal.*
3. Re-install the plugs.

External checks

- ☐ Check the suction hose and discharge hose for holes or tears.
- ☐ Make sure that the hose couplings and hose clamps are attached.
- ☐ Check that all rotating element protective guards are securely installed and do not make physical contact.
- ☐ Verify that the suction line is free of obstruction.
- ☐ Check the tightness of the external fasteners—tighten the external fasteners as necessary.
- ☐ Make sure all applicable discharge valves are functioning properly.
- ☐ Verify that the compressor discharge line is clear of debris.

Internal checks

- ☐ Check engine oil, coolant, and fuel levels—fill as required.
- ☐ Check the condition of the air cleaner—remove debris or replace air cleaner.
- ☐ Check the condition of the fuel lines.

4.9 Starting, Operating, and Stopping the Machine

Requirements

- Suction and discharge hoses properly attached and positioned
- There is fuel in the tank

Background

- Pump flow is a factor of engine speed and suction and discharge head.
- Engine speed is controlled by the throttle.
- Engine speed is infinitely variable between the idle speed position and the full speed position. Push the throttle knob in to decrease the engine speed; pull it out to increase the engine speed.

Starting the machine

Perform the procedure below to start the machine.

1. Loosen the locking knob **(a)**. Press and hold the button **(b)** and push the throttle knob in all the way to set the engine to the idle speed position.

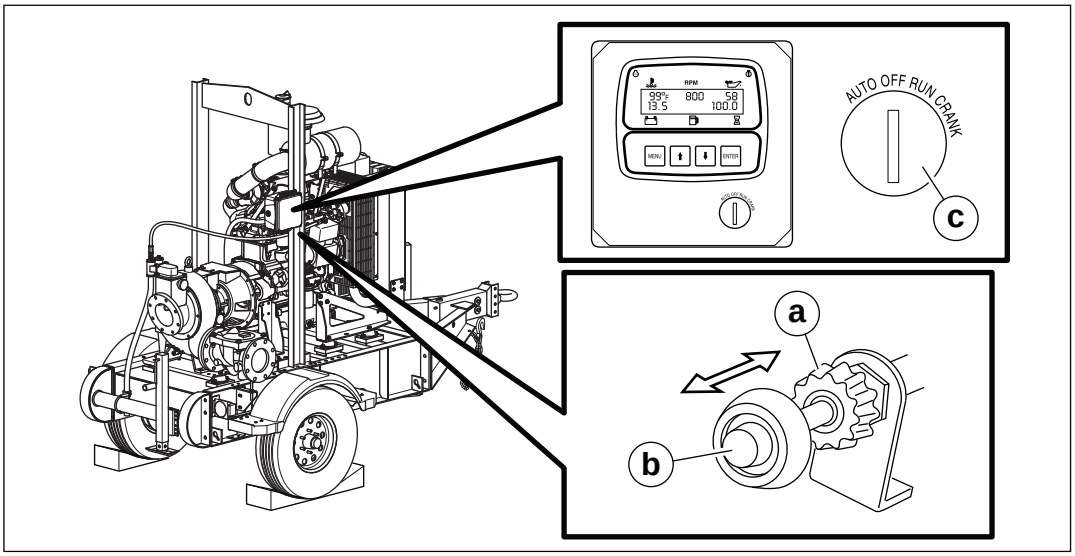

wc_gr012010

2. Rotate the key to the right and hold it in the “CRANK” position **(c)** until the engine starts, then release the key.

NOTICE: Cranking the engine longer than 20 seconds can damage the engine. If the engine does not start within 20 seconds, return the key to the “OFF” position and wait one minute for the starter motor to cool before reattempting to start the engine.

3. Allow the engine to warm up before operating the machine.

Note: *If the engine oil does not reach operating pressure within 30 seconds, the engine will stop. You must return the starting key to the “OFF” position for 30 seconds before restarting the engine.*

This procedure continues on the next page.

Continued from the previous page.

4. While the pump is priming, pull the throttle knob all the way out to set the engine to full speed, until the water flow begins.
- The pump should prime and begin pumping within a minute or two.
- At high suction lifts, the pump may require a longer period of time to prime.
- If the pump has trouble priming, add additional hose clamps. The smallest air leak on the suction side of the pump will prevent the pump from priming.
- If the pump does not prime, stop the engine and see chapter *Troubleshooting.*

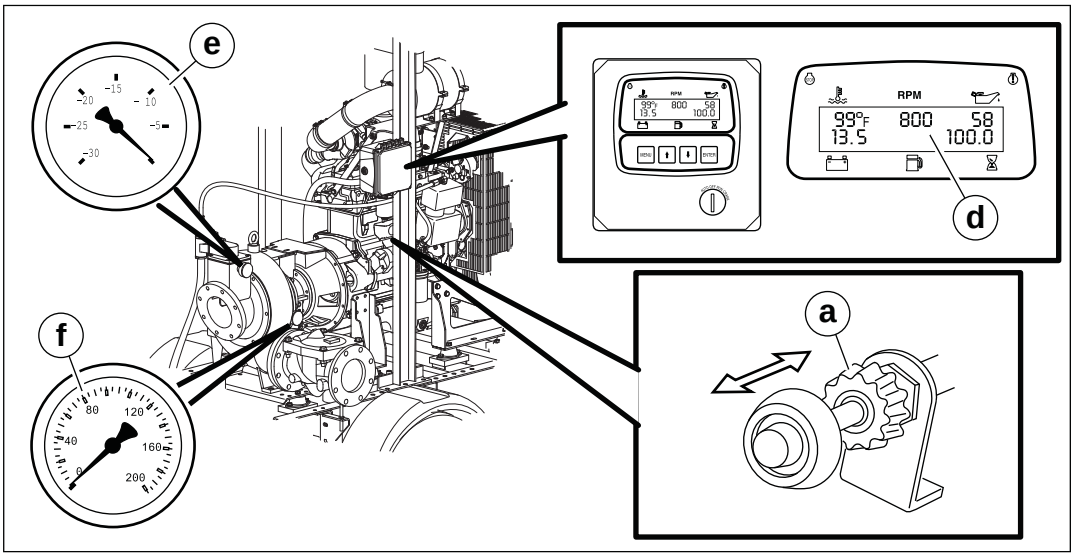

wc_gr012146

5. While observing the RPM readout on the control panel **(d)**, adjust the engine speed **(c)** to the desired using the throttle knob. Tighten the locking knob **(a)** when the desired engine speed is set.

Note: *Refer to the pump performance curve to adjust the flow to desired level. See "Technical Data".*

NOTICE: Do not run the pump dry for more than one hour, nor run the pump without oil in the bearing/seal housing. The mechanical seal could overheat and be damaged.

Monitoring

- Every foot the of elevation of the pump inlet to the water surface is equal to approximately 0.9 in. Hg. If the vacuum gauge **(e)** reads pressures near 5 in. Hg, there is a problem. Stop the machine and investigate the cause.
- The pressure gauge **(f)** displays discharge head. If the reading is very low, the pump is not pumping any water. Stop the machine and investigate the cause.

Stopping the machine

Turn the key to the "OFF" position.

4.10 Setting Up and Using the Automatic Start/Stop Capabilities

Requirements

- A two-float harness
- Materials for holding the two floats such as a PVC pipe, zip ties, or other fasteners.

WARNING
Personal injury hazard. If the key is set to the AUTO position before setup is completed, the engine may start unexpectedly, which can lead to an accident.

► Do not set the key to the AUTO position until setup is completed.

Setting up the floats

Perform the procedure below to set up the pump for use in the automatic mode.

1. Secure the PVC pipe **(a)** in the water to be pumped.
2. Secure the floats to the PVC pipe.
   a. Secure the upper float at the maximum desired water level—this is the level at which the pump will turn ON.
   b. Secure the lower float at the minimum desired water level—this is the level at which the pump will turn OFF.

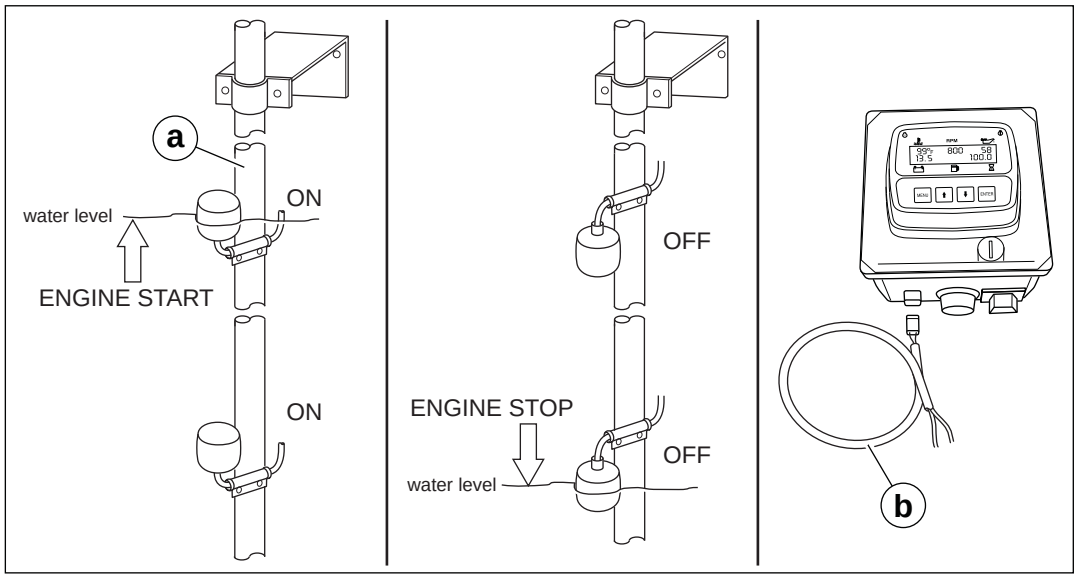

wc_gr012067

3. Connect the two-float harness **(b)** into the port on the bottom of the control panel.
4. Start the machine and set the throttle to the desired position (rpm). See topic *Starting, Operating, and Stopping the Machine*.

Note: *When the float switches activate (are in the ON position), the machine will automatically start and run at the engine speed last set by the throttle.*

5. Stop the machine.

This procedure continues on the next page.

Continued from the previous page.

Starting

1. Inform all personnel that the engine may start if the floats move.
2. Rotate the key to the “AUTO” position **(a)**.

► When both float switches rise to the ON position:
- an audible alarm sounds,
- and after a 10-second delay, the engine starts.

► When both float switches move to the OFF position, the engine stops.

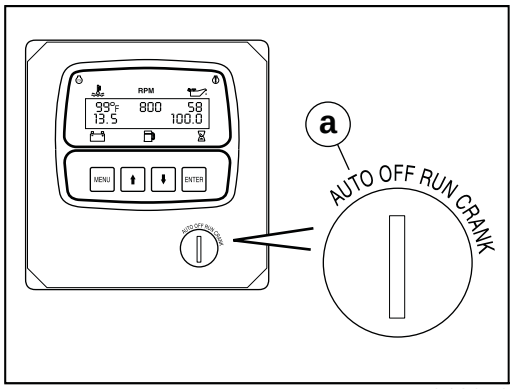

wc_gr012046

3. Monitor the pump as necessary:
- fuel
- engine speed
- discharge pressure
- suction pressure

Stopping

To stop the pump and end the automatic mode, turn the starting key to the “OFF” position.

4.11 Emergency Shutdown Procedure

If a breakdown/accident occurs while the machine is operating, follow the procedure below.

1. Stop the engine.
2. Remove the obstruction.
3. Unkink the hoses.
4. Allow the machine to cool.
5. Contact the rental yard or machine owner.

4.12 Automatic Shut-down System

Background

This machine is equipped with an automatic shut-down system. The system monitors oil pressure and coolant temperature. The system warns the operator of a pending shut-down condition (pre-alarm). It also automatically stops the engine if a shut-down condition occurs.

Condition	Type	Value	Response
Low oil pressure	Pre-alarm	1 bar (15 psi)	Amber light illuminates
	Shutdown	0.7 bar (10 psi)	■ Red light illuminates ■ Alarm sounds ■ Engine stops
High coolant temperature	Pre-alarm	105°C (220°F)	Amber light illuminates
	Shutdown	110°C (230°F)	■ Red light illuminates ■ Alarm sounds ■ Engine stops

Action

When either a pre-alarm or a shutdown condition exists:

1. Turn the key switch to the OFF position.
2. Check the engine oil level; add oil as needed.
3. Check the engine coolant level; add coolant as needed.

5 General Maintenance

WARNING
A poorly maintained machine can malfunction, causing injuries or permanent damage to the machine.

► Keep the machine in safe operating condition by performing periodic maintenance and making repairs as needed.

5.1 Maintaining the Emission Control System

For machines sold in North America:

Normal maintenance, replacement, or repair of emission control devices and systems may be performed by any repair establishment or individual; however, warranty repairs must be performed by a dealer/service center authorized by Wacker Neuson. The use of service parts that are not equivalent in performance and durability to authorized parts may impair the effectiveness of the emission control system and may have a bearing on the outcome of a warranty claim.

5.2 Periodic Maintenance Schedule

The table below lists basic machine and engine maintenance. Tasks designated with check marks may be performed by the operator. Tasks designated with square bullet points require special training and equipment.

Refer to the engine owner's manual for additional information.

	Daily before starting	Every 100 hours	Every 300 hours	Every 500 hours
Check external hardware.	✓			
Check bearing housing for oil or water leaks.	✓			
Check oil level of bearing housing.	✓			
Check oil level of mechanical seal.	✓			
Change oil in mechanical seal.		■		
Change oil in bearing housing.			■	
Check coupling bolt tightness.				✓

5.3 Maintaining the Trailer

Tires

- Keep tires inflated to the proper pressure as shown on the tire sidewall.
- Check tread periodically for wear.
- Replace tires as required.

Wheels

- Check that lug nuts holding wheels are tight.
- Replace any missing lug nuts immediately.

Axle hubs

- Grease axle hubs using a good wheel-bearing grease.

5.4 Checking the Pump Housing Mounting Bolts

When

After the first 50 hours of operation

Overview

Tighten the mounting bolts **(a)** on the pump housing after the first 50 hours of operation. Inspect the mounting bolts periodically thereafter, and tighten when required. Torque the mounting bolts to 108 Nm (80 ft.lbs.).

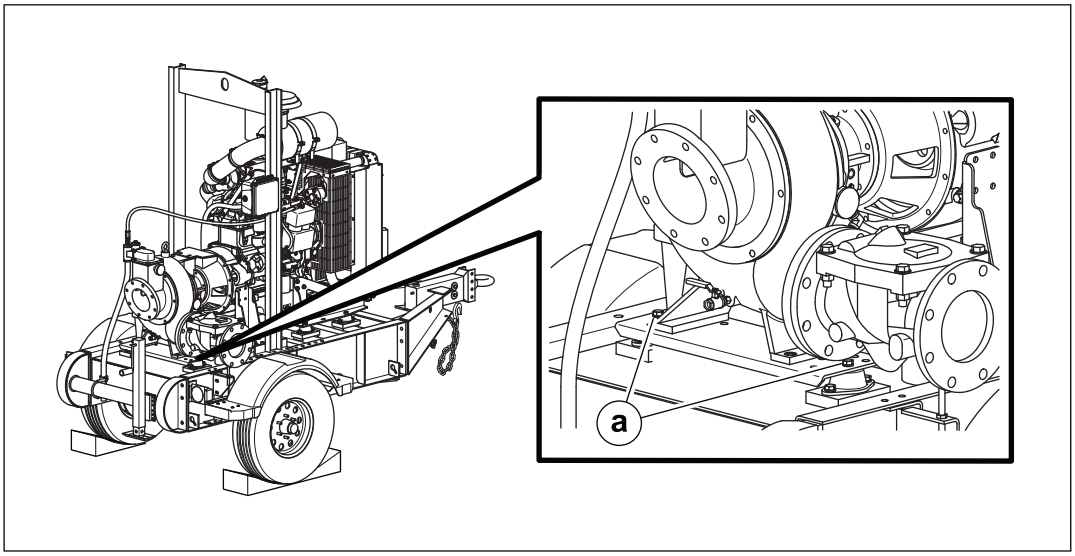

wc_gr012048

5.5 Checking and Changing the Mechanical Seal Oil

When

► Check the oil in the mechanical seal housing daily before starting the pump.

► Change the oil every 100 hours of operation.

Requirements

- Machine stopped
- Plastic sheet
- Container of suitable size to collect drained oil
- Fresh oil (ISO 68 hydraulic oil)

WARNING
Most used oil contains small amounts of materials that can cause cancer and other health problems if inhaled, ingested, or left in contact with skin for prolonged periods of time.

► Take steps to avoid inhaling or ingesting used engine oil.

► Wash skin thoroughly after exposure to used engine oil.

Checking the oil level

Perform the procedure below to check the oil level for the mechanical seal.

1. The oil level should be to the top of the mechanical seal sightglass **(a)**. Add more oil if necessary.

NOTICE: Check the oil level and check for signs of water contamination. It is normal for some water to pass through the mechanical seal; however, if water contamination is heavy and oil feels watered down, inspect the mechanical seal for signs of wear or damage. If water contamination is found, change the oil immediately.

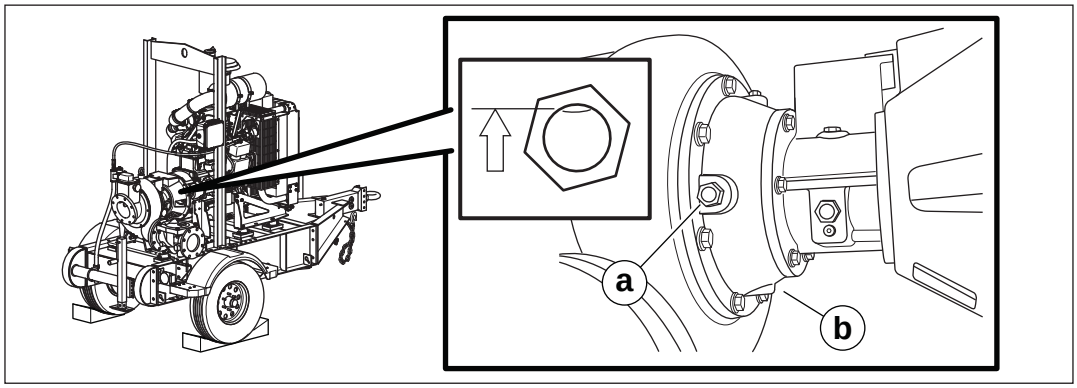

wc_gr012011

To change the oil

1. Remove the drain plug **(b)** from the bottom of the housing and drain the oil.
Note: *In the interests of the environment protection, place plastic sheeting and a container under the machine to collect the liquid which drains off. Dispose of drained oil in accordance with the environmental protection legislation.*

This procedure continues on the next page.

Continued from the previous page.

2. Re-install the drain plug.
3. Remove the fill vent and add ISO 68 hydraulic oil through the port **(a)** on top of the housing until the oil level reaches the top of the sight glass.
4. Re-install the fill vent.

Result

The mechanical seal oil has now been checked and/or changed.

Note: *Dispose of drained oil in accordance with environmental protection legislation.*

5.6 Checking and Changing the Bearing Housing Oil

When

► Check the oil level in housing daily before starting.

► Change the oil every 300 hours.

Requirements

- Machine stopped
- Plastic sheet
- Container of suitable size to collect drained oil
- Fresh oil (ISO 68 hydraulic oil)

WARNING
Most used oil contains small amounts of materials that can cause cancer and other health problems if inhaled, ingested, or left in contact with skin for prolonged periods of time.

► Take steps to avoid inhaling or ingesting used engine oil.

► Wash skin thoroughly after exposure to used engine oil.

Procedure

Perform the procedure below to check the oil level in the bearing housing.

1. Remove the fill vent **(a)** from the top of the bearing housing. Oil level should be to the top of the sightglass **(b)**. Add oil as required.

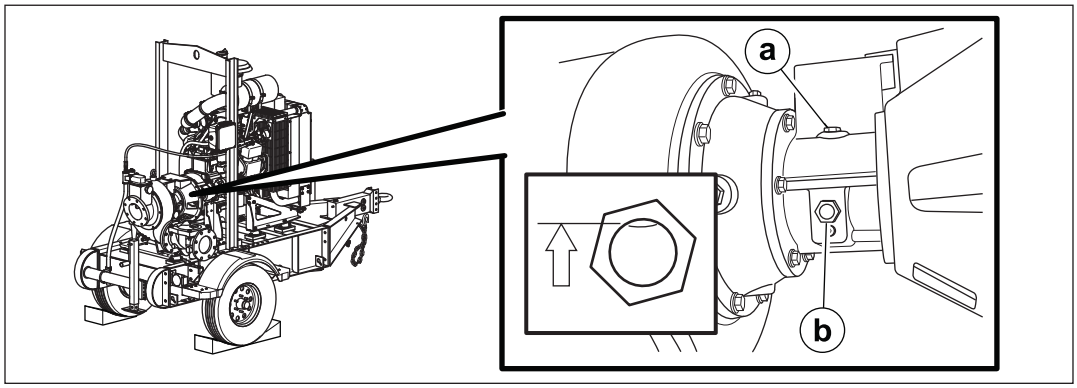

wc_gr012012

To change the oil

1. Remove the drain plug from the bottom of the bearing housing and drain oil.
Note: *In the interests of the environment protection, place plastic sheeting and a container under the machine to collect the liquid which drains off. Dispose of drained oil in accordance with environmental protection legislation.*
2. Re-install the drain plug.
3. Remove the fill vent and add ISO 68 hydraulic oil through the port **(a)** on top of the bearing housing. Do not overfill the bearing housing.
4. Re-install the fill vent.

Result

The bearing housing oil has now been checked and/or changed.

5.7 Inspecting the Impeller

Background Sand, dirt, and debris will cause the impeller to wear. If the pump's performance drops over time, inspect the impeller for damage.

Requirements
- Engine stopped
- Battery disconnected

WARNING
Personal injury hazard.
► Do not reach into or insert anything into the pump while the engine is running.
► Do not run the pump with the impeller cover removed.

Procedure Perform the procedure below to inspect the impeller.

1. Stop the engine and disconnect the battery.
2. Open the volute drain valve **(a)** and drain the pump.

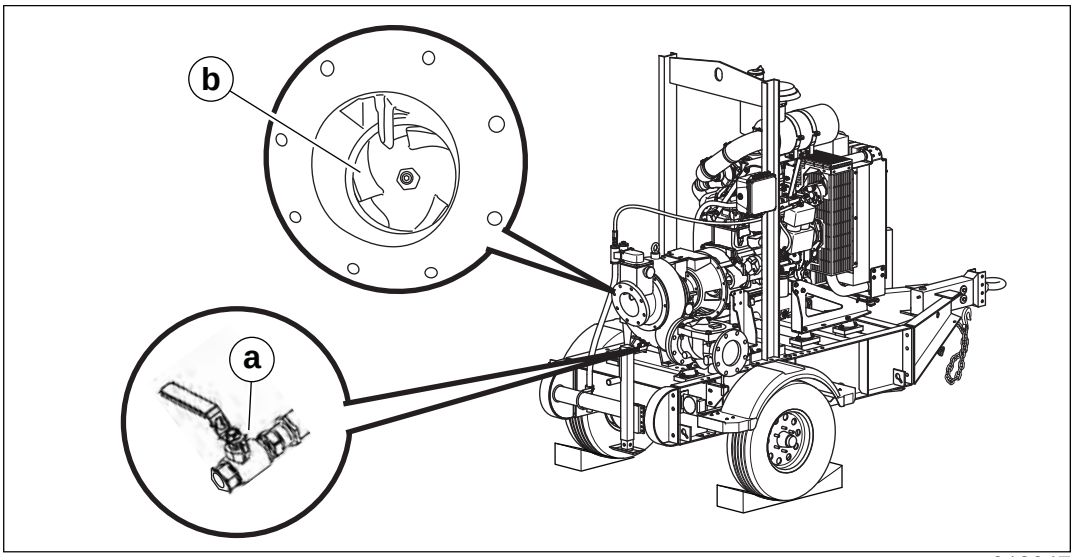

wc_gr012047

WARNING
Personal injury hazard. Impeller edges can become sharp.
► Use care when working on the pump to reduce the risk of being cut.

3. Remove the suction hose.
4. Inspect the impeller **(b)** for damaged blades. Damaged blades can result in an unbalanced state, vibration, and poor pump performance.

Result The impeller has now been inspected.

5.8 Maintaining the Battery

WARNING
Explosion hazard. Batteries can emit explosive hydrogen gas.

► Keep all sparks and flames away from the battery.

► Do not short-circuit battery posts.

Safety precautions

Observe the following safety precautions to prevent serious damage to the electrical system.

- Do not disconnect the battery while the machine is running.
- Do not attempt to run the machine without a battery.
- Do not attempt to jump-start the machine.
- In the event that the machine has a discharged battery, either replace the battery with a fully charged battery or charge the battery using an appropriate battery charger.
- Dispose of waste batteries in accordance with local environmental regulations.

Battery connections

To connect the battery:

1. Connect the red positive (+) battery cable to the battery.
2. Connect the black negative (-) battery cable to the battery.

To disconnect the battery:

1. Stop the engine.
2. Place all electrical switches in the OFF position.
3. Disconnect the black negative (-) battery cable from the battery.
4. Disconnect the red positive (+) battery cable from the battery.

Maintaining battery condition

- Follow the battery manufacturer’s maintenance recommendations.
- Keep battery terminals clean and connections tight.
- When necessary, tighten the cables and grease the cable clamps with petroleum jelly.
- Maintain the battery at full charge to improve cold weather starting.

5.9 Storage

Introduction

Extended storage of equipment requires preventive maintenance. Performing these steps helps to preserve machine components and ensures the machine will be ready for future use. While not all of these steps necessarily apply to this machine, the basic procedures remain the same.

When

Prepare your machine for extended storage if it will not be operated for 30 days or more.

Preparing for storage

Follow the procedures below to prepare your machine for storage.

- Complete any needed repairs.
- Replenish or change oils (engine, exciter, seal and bearing housings, and gearcase) per the intervals specified in the Periodic Maintenance Schedule.
- Grease all fittings and, if applicable, repack bearings.
- Inspect engine coolant. Replace coolant if it appears cloudy, is more than two seasons old, or does not meet the average lowest temperature for your area.
- If your machine has an engine equipped with a fuel valve, start the engine, close the fuel valve, and run the engine until it stops.
- Flush the pump and the hose lines by pumping clean water for a few minutes. If the pump was used for pumping salt water, be sure to use fresh water when flushing it.
- Remove the covers and clean the pump's interior. Wipe or spray all interior surfaces with a rust-inhibiting oil.
- Consult the engine owner's manual for instructions on preparing the engine for storage.

Stabilizing the fuel

After completing the procedures listed above, fill the fuel tank completely and add a high-quality stabilizer to the fuel.

- Choose a stabilizer that includes cleaning agents and additives designed to coat/protect the cylinder walls.
- Make sure the stabilizer you use is compatible with the fuel in your area, fuel type, grade and temperature range. Do not add extra alcohol to fuels which already contain it (for example, E10).
- For engines with diesel fuel, use a stabilizer with a biocide to restrict or prevent bacteria and fungus growth.
- Add the correct amount of stabilizer per the manufacturer's recommendations.

Storing the machine

Perform these remaining steps to store your machine.

- Wash the machine and allow it to dry.
- Move the machine to a clean, dry, secure storage location. Block or chock wheels to prevent machine movement.
- Use touch-up paint as needed to protect exposed metal against rust.
- If the machine has a battery, either remove or disconnect it.

NOTICE: Allowing the battery to freeze or completely discharge is likely to cause permanent damage. Periodically charge the battery while the machine is not in use. In cold climates, store and charge the battery indoors or in a warm location.

- Cover the machine. Tires and other exposed rubber items should be protected from the weather. Either cover them or use a readily available protectant.

5.10 Machine Disposal / Decommissioning

Introduction

This machine must be properly decommissioned at the end of its service life. Responsible disposal of recyclable components, such as plastic and metal, ensures that these materials can be reused—conserving landfill space and valuable natural resources.

Responsible disposal also prevents toxic chemicals and materials from harming the environment. The operating fluids in this machine, including fuel, engine oil, and grease, may be considered hazardous waste in many areas. Before decommissioning this machine, read and follow local safety and environmental regulations pertaining to the disposal of construction equipment.

Preparation

Perform the following tasks to prepare the machine for disposal.

- ☐ Move the machine to a protected location where it will not pose any safety hazards and cannot be accessed by unauthorized individuals.
- ☐ Ensure that the machine cannot be operated from the time of final shutdown to disposal.
- ☐ Drain all fluids, including fuel, engine oil, and coolant.
- ☐ Seal any fluid leaks.

Disposal

Perform the following tasks to dispose of the machine.

- ☐ Disassemble the machine and separate all parts by material type.
- ☐ Dispose of recyclable parts as specified by local regulations.
- ☐ Dispose of all non-hazardous components that cannot be recycled.
- ☐ Dispose of waste fuel, oil, and grease in accordance with local environmental protection regulations.

6 Engine Maintenance: T4i Yanmar 4TNV88-BDSA

The viscosity of the engine oil is an important factor when determining the correct engine oil to use in your machine. Use an engine oil of appropriate viscosity based on the expected outside air temperature. See the table below.

WARNING
Most used liquids from this machine such as oil, gasoline, grease, etc., contain small amounts of materials that can cause cancer and other health problems if inhaled, ingested, or left in contact with skin for prolonged periods of time.

► Take steps to avoid inhaling or ingesting used liquids.

► Wash skin thoroughly after exposure to used liquids.

Engine Oil Specifications

Use an engine oil that meets or exceeds the following guidelines and classifications:

Service Categories

- API Service Categories CD, CF, CF-4, CI-4 (Use an API CF or higher quality oil for electronically controlled engines.)
- ACEA Service Categories E-3, E-4, and E-5
- JASO Service Category DH-1

Additional Technical Engine Oil Requirements:

The engine oil must be changed when the Total Base Number (TBN) has been reduced to 1.0 mgKOH/g. TBN (mgKOH/g) test method; JIS K-201-5.2-2 (HCl), ASTM D4739 (HCl).

Engine Oil Viscosity

Select the appropriate engine oil viscosity based on the ambient temperature and use the SAE Service Grade Viscosity Chart in **Figure 3**.

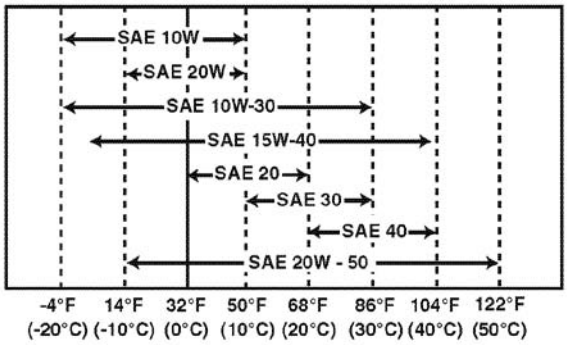

Figure 3

wc_gr770039

The engine maintenance schedule(s) in this chapter are reproduced from the engine owner's manual. For additional information, see the engine owner's manual.

○: Check ◇: Replace ●: Contact your authorized Yanmar industrial engine dealer or distributor

System	Check Item	Daily	Periodic Maintenance Interval						
			Every 50 hours	Every 250 hours	Every 500 hours	Every 1000 hours	Every 1500 hours	Every 2000 hours	Every 3000 hours
Cooling System	Check and Refill Engine Coolant	○							
	Check and Clean Radiator Fins		○						
	Check and Adjust Cooling Fan V-belt		○ 1st time	○ 2nd and after					
	Drain, Flush and Refill Cooling System With New Coolant					◇ or every 1 year whichever comes first			
Cylinder Head	Adjust Intake / Exhaust Valve Clearance					●			
	Lap Intake / Exhaust Valve Seats (if required)							●	
Electrical Equipment	Check Indicators	○							
	Check Battery		○						
Engine Oil	Check Engine Oil Level	○							
	Drain and Fill Engine Oil		◇ 1st time	◇ 2nd and after					
	Replace Engine Oil Filter								
Engine Speed Control	Check and Adjust Governor Lever and Engine Speed Control	○		○					
Emission Control Warranty	Inspect, Clean And Test Fuel Injectors, if necessary						●		
	DI ENGINE Inspect Turbocharger (Blower Wash as Necessary)								●
	DI ENGINE Inspect, Clean and Test EGR Valve								●
	DI ENGINE Clean EGR Lead Valve								●
	DI ENGINE Clean EGR Cooler (Clean to Blow Water/Air Passages)						●		
	Inspect Crankcase Breather System						●		
Fuel	Check and Refill Fuel Tank Level	○							
	Drain Fuel Tank			○					
	Drain Fuel Filter / Water Separator	○							
	Check Fuel Filter / Water Separator	○							
	Clean Fuel Filter / Water Separator				○				
	Replace Fuel Filter				◇				
Hoses	Replace Fuel System and Cooling System Hoses							◇ or every 2 yrs.	
Intake and Exhaust	Clean or Replace Air Cleaner Element			○	◇				
Complete Engine	Overall Visual Check Daily	○							

Note: These procedures are considered normal maintenance and are performed at the owner's expense.

wc_gr770038

7 Engine Maintenance: John Deere 4045TF280/290

The engine maintenance schedule(s) in this chapter are reproduced from the engine owner's manual. For additional information, see the engine owner's manual.

Lubrication and Maintenance

Lubrication and Maintenance Service Interval Chart—Standard Industrial Engines

	Lubrication and Maintenance Service Intervals			
Item	Daily	500 Hour/ 12 Month	2000 Hour/ 24 Month	As Required
Check Engine Oil and Coolant Level	•			
Check Fuel Filter/Water Bowl	•			
Check Air Cleaner Dust Unloader Valve & Restriction Indicator Gauge[a]	•			
Visual Walk Around Inspection	•			
Service Fire Extinguisher		•		
Check Engine Mounts		•		
Service Battery		•		
Check Manual Belt Tensioner and Belt Wear		•		
Change Engine Oil And Replace Oil Filter[b,c]		•		
Check Crankcase Vent System		•		
Check Air Intake Hoses, Connections, & System		•		
Replace Fuel Filter Elements		•		
Check Automatic Belt Tensioner and Belt Wear		•		
Check Engine Electrical Ground Connection		•		
Check Cooling System		•		
Coolant Solution Analysis-Add SCAs as required		•		
Pressure Test Cooling System		•		
Check Engine Speeds		•		
Flush and Refill Cooling System[d]			•	
Test Thermostats			•	
Check and Adjust Engine Valve Clearance			•	
Add Coolant				•
Replace Air Cleaner Elements				•
Replace Fan and Alternator Belts				•
Check Fuses				•
Check Air Compressor (If Equipped)				•
Bleed Fuel System				•

[a]*Replace primary air cleaner element when restriction indicator shows a vacuum of 625 mm (25 in.) H2O.*
[b]*During engine break-in, change the oil and filter for the first time before 100 hours of operation.*
[c]*If the recommended engine oils, John Deere PLUS-50™, ACEA-E7 or ACEA E6 are not used, the oil and filter change interval is reduced (see DIESEL ENGINE OIL AND FILTER INTERVALS chart). If diesel fuel with a sulfur content greater than 0.05% is used, the oil and filter change interval is also reduced.*
[d]*If John Deere COOL-GARD is used, the flushing interval may be extended to 3000 hours or 36 months. If John Deere COOL-GARD is used and the coolant is tested annually AND additives are replenished as needed by adding a supplemental coolant additive, the flushing interval may be extended to 5000 hours or 60 months, whichever occurs first.*

OUCD006,00000E1 -19-09OCT07-1/1

770050

NOTICE: The standard oil change interval on Wacker Neuson Mobile Generators is 250 hours. To meet the 500-hour extended interval period listed above, certain requirements must be met including: engine drain pan, diesel fuel, engine oil, and fuel filter used. See the John Deere operator's manual that came with your engine.

The viscosity of the engine oil is an important factor when determining the correct engine oil to use in your machine. Use an engine oil of appropriate viscosity based on the expected outside air temperature. See the table below.

WARNING

Most used liquids from this machine such as oil, gasoline, grease, etc., contain small amounts of materials that can cause cancer and other health problems if inhaled, ingested, or left in contact with skin for prolonged periods of time.

► Take steps to avoid inhaling or ingesting used liquids.

► Wash skin thoroughly after exposure to used liquids.

Fuels, Lubricants, and Coolant

Diesel Engine Break-In Oil

New engines are filled at the factory with John Deere ENGINE BREAK-IN OIL. During the break-in period, add John Deere ENGINE BREAK-IN OIL as needed to maintain the specified oil level.

Operate the engine under various conditions, particularly heavy loads with minimal idling, to help seat engine components properly.

Change the oil and filter after the first 100 hours of operation of a new or rebuilt engine.

After engine overhaul, fill the engine with John Deere ENGINE BREAK-IN OIL.

If John Deere ENGINE BREAK-IN OIL is not available, use a diesel engine oil meeting one of the following during the first 100 hours of operation:

- API Service Classification CE
- API Service Classification CD
- API Service Classification CC
- ACEA Oil Sequence E2
- ACEA Oil Sequence E1

After the break-in period, use John Deere PLUS-50™ or other diesel engine oil as recommended in this manual.

IMPORTANT: Do not use PLUS-50 oil or engine oils meeting any of the following during the first 100 hours of operation of a new or rebuilt engine:

API CJ-4	ACEA E7
API CI-4 PLUS	ACEA E6
API CI-4	ACEA E5
API CH-4	ACEA E4
API CG-4	ACEA E3
API CF-4	
API CF-2	
API CF	

These oils will not allow the engine to break-in properly.

PLUS-50 is a trademark of Deere & Company.

BK34394,0000149 -19-24JUN08-1/1

Diesel Engine Oil

Use oil viscosity based on the expected air temperature range during the period between oil changes.

John Deere Plus-50™ II oil is preferred.

John Deere Plus-50™ is also recommended.

Other oils may be used if they meet one or more of the following:

- John Deere Torq-Gard™
- API Service Category CJ-4
- API Service Category CI-4 PLUS
- API Service Category CI-4
- ACEA Oil Sequence E9
- ACEA Oil Sequence E7
- ACEA Oil Sequence E6
- ACEA Oil Sequence E5
- ACEA Oil Sequence E4

Multi-viscosity diesel engine oils are preferred.

Diesel fuel quality and fuel sulfur content must comply with all existing emissions regulations for the area in which the engine operates.

DO NOT use diesel fuel with sulfur content greater than 10 000 mg/kg (10 000 ppm).

Plus-50 is a trademark of Deere & Company
Torq-Gard is a trademark of Deere & Company

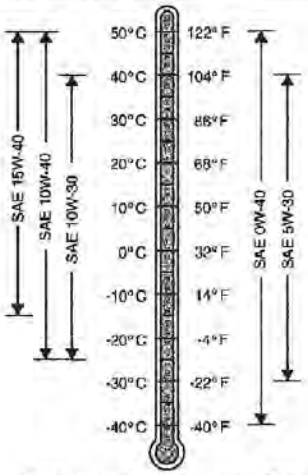

Oil Viscosities for Air Temperature Ranges

DX,ENOIL1 -19-11APR11-1/1

770019

Diesel Engine Break-In Oil — Non-Emissions Certified and Certified Tier 1, Tier 2, Tier 3, Stage I, Stage II, and Stage III

New engines are filled at the factory with either John Deere Break-In™ or John Deere Break-In Plus™ Engine Oil. During the break-in period, add John Deere Break-In™ or Break-In Plus™ Engine Oil, respectively, as needed to maintain the specified oil level.

Operate the engine under various conditions, particularly heavy loads with minimal idling, to help seat engine components properly.

If John Deere Break-In™ Engine Oil is used during the initial operation of a new or rebuilt engine, change the oil and filter at a maximum of 100 hours.

If John Deere Break-In Plus™ Engine Oil is used, change the oil and filter at a minimum of 100 hours and a maximum equal to the interval specified for John Deere Plus-50™ II or Plus-50™ oil.

After engine overhaul, fill the engine with either John Deere Break-In™ or Break-In Plus™ Engine Oil.

If John Deere Break-In™ or Break-In Plus™ Engine Oil is not available, use an SAE 10W-30 viscosity grade diesel engine oil meeting one of the following and change the oil and filter at a maximum of 100 hours of operation:

- API Service Classification CE
- API Service Classification CD
- API Service Classification CC
- ACEA Oil Sequence E2
- ACEA Oil Sequence E1

IMPORTANT: Do not use Plus-50™ II, Plus-50™, or engine oils meeting any of the following for the initial break-in of a new or rebuilt engine:

API CJ-4	ACEA E9
API CI-4 PLUS	ACEA E7
API CI-4	ACEA E6
API CH-4	ACEA E5
API CG-4	ACEA E4
API CF-4	ACEA E3
API CF-2	
API CF	

These oils do not allow the engine to break in properly.

John Deere Break-In Plus™ Engine Oil can be used for all John Deere diesel engines at all emission certification levels.

After the break-in period, use John Deere Plus-50™ II, John Deere Plus-50™, or other diesel engine oil as recommended in this manual.

Break-In is a trademark of Deere & Company.
Break-In Plus is a trademark of Deere & Company
Plus-50 is a trademark of Deere & Company.

DX,ENOIL4 -19-15MAY13-1/1

770051

Engine Oil and Filter Service Intervals — Tier 3 and Stage IIIA — OEM Applications

Recommended oil and filter service intervals are based on a combination of oil pan capacity, type of engine oil and filter used, and sulfur content of the diesel fuel. Actual service intervals also depend on operation and maintenance practices.

Use oil analysis to evaluate the condition of the oil and to aid in selection of the proper oil and filter service interval. Contact your John Deere dealer for more information on engine oil analysis.

Change the oil and oil filter at least once every 12 months even if the hours of operation are fewer than the otherwise recommended service interval.

Diesel fuel sulfur content affects engine oil and filter service intervals.

- Use of diesel fuel with sulfur content less than 1000 mg/kg (1000 ppm) is RECOMMENDED.
- Use of diesel fuel with sulfur content 1000—2000 mg/kg (1000—2000 ppm) REDUCES the oil and filter service interval.
- BEFORE using diesel fuel with sulfur content greater than 2000 mg/kg (2000 ppm), contact your John Deere dealer.
- DO NOT use diesel fuel with sulfur content greater than 10000 mg/kg (10000 ppm).

IMPORTANT: To avoid engine damage:

- **Reduce oil and filter service intervals by 50% when using biodiesel blends greater than B20. Oil analysis may allow longer service intervals.**
- **Use only approved oil types.**

Approved Oil Types:

- "Plus-50 Oils" include John Deere Plus-50™ II and John Deere Plus-50™
- "Other Oils" include John Deere Torq-Gard™, API CJ-4, API CI-4 PLUS, API CI-4, ACEA E9, ACEA E7, ACEA E6, ACEA E5, and ACEA E4

NOTE: The 500 hour extended oil and filter change interval is only allowed if all of the following conditions are met:

- *Engine equipped with an extended drain interval oil pan*
- *Use of diesel fuel with sulfur content less than 2000 mg/kg (2000 ppm) for PowerTech™ Plus engines or 5000 mg/kg (5000 ppm) for PowerTech™ engine*
- *Use of John Deere Plus-50™ II or John Deere Plus-50™ oil*
- *Use of an approved John Deere oil filter*

	Tier 3 and Stage IIIA - PowerTech™ Plus				Tier 3 and Stage IIIA - PowerTech™		
	Oil Pan Size (L/kW)				Oil Pan Size (L/kW)		
Oil pan capacity	Greater than or equal to 0.10	Greater than or equal to 0.12	Greater than or equal to 0.14	Greater than or equal to 0.22	Greater than or equal to 0.10	Greater than or equal to 0.12	Greater than or equal to 0.14
Fuel Sulfur	Less than 1000 mg/kg (1000 ppm)				Less than 1000 mg/kg (1000 ppm)		
Plus-50 Oils	375 hours	500 hours	500 hours	500 hours	375 hours	500 hours	500 hours
Other Oils	250 hours	250 hours	250 hours	250 hours	250 hours	250 hours	250 hours
Fuel Sulfur	1000—2000 mg/kg (1000—2000 ppm)				1000—2000 mg/kg (1000—2000 ppm)		
Plus-50 Oils	300 hours	300 hours	500 hours	500 hours	300 hours	400 hours	500 hours
Other Oils	200 hours	200 hours	250 hours	250 hours	200 hours	200 hours	250 hours
Fuel Sulfur	2000—5000 mg/kg (2000—5000 ppm)				2000—5000 mg/kg (2000—5000 ppm)		
Plus-50 Oils	Not Recommended Contact John Deere dealer (dealer refers to DTAC solution)				275 hours	350 hours	500 hours
Other Oils	Not Recommended Contact John Deere dealer (dealer refers to DTAC solution)				150 hours	175 hours	250 hours
Fuel Sulfur	5000—10000 mg/kg (5000—10000 ppm)				5000—10000 mg/kg (5000—10000 ppm)		
Plus-50 Oils	Not Recommended Contact John Deere dealer (dealer refers to DTAC solution)				187 hours	250 hours	250 hours
Other Oils	Not Recommended Contact John Deere dealer (dealer refers to DTAC solution)				125 hours	125 hours	125 hours
Oil analysis may extend the service interval of "Other Oils", to a maximum not to exceed the interval for Plus-50 Oils.							

Plus-50 is a trademark of Deere & Company
Torq-Gard is a trademark of Deere & Company
PowerTech is a trademark of Deere & Company

DX,ENOIL13,T3,OEM -19-17JUN13-1/1

770052

8 Troubleshooting

Problem / Symptom	Cause	Remedy
Engine does not start.	■ No fuel in tank ■ Old fuel ■ Battery connections loose or corroded ■ Engine oil pressure/oil level low	■ Add fuel. ■ Drain fuel tank, change fuel filter, and fill with fresh fuel. ■ Check and clean battery connections. ■ Add engine oil.
Engine is hard to start.	■ Dirt or debris inside pump housing blocking movement of impeller ■ Battery charge low	■ Clean or remove debris. ■ Charge or replace battery.
Engine starts but pump does not take in water.	■ Engine speed not high enough to create necessary vacuum ■ Suction strainer partially clogged ■ Suction hose damaged ■ Air leak at suction port ■ Pump too high above water line ■ Debris collecting in pump housing ■ Venturi components need to be replaced	■ Increase engine speed above 2,000 RPM. ■ Clean or remove debris. ■ Repair or replace suction hose. ■ Repair air leak. ■ Move pump closer to water. ■ Clean or remove debris. ■ Switch compressor discharge line to the spare venturi.
Pump takes in water but discharges little or no water.	■ Suction strainer partially clogged ■ Impeller worn ■ Discharge hose kinked or blocked ■ Engine speed too low	■ Clean or remove debris. ■ Inspect impeller and add shims as necessary. ■ Unkink discharge hose or remove obstruction. ■ Run pump at maximum operating speed.
Engines stops by itself.	■ No fuel in tank ■ Engine oil pressure/oil level low ■ Engine too hot	■ Add fuel. ■ Add engine oil. ■ Allow the engine to cool. Check/ add coolant.

9 Technical Data—APT 4 and APT 4S, Yanmar

9.1 Engine: Yanmar

Machine Item Number		**APT 4T** **5200019643, 5200019644, 5200019792, 5200019793**	**APT 4S** **5200018977, 5200019798**
Engine			
Engine type		Four cylinder, 4-cycle, liquid cooled, direct injection diesel engine	
Engine make		Yanmar	
Engine model		4TNV88-BDSA	
Emissions		Tier 3	
Maximum rated power @ rated speed[1]	kW (hp)	30 (40) @ 2,200 rpm	
Displacement	L (in^3)	2.19 (133.6)	
Operating speed (maximum)	rpm	2,200	
Operating speed (minimum)	rpm	1,200	
Air cleaner	type	Dry panel	
Battery	V / ccA	12 / 750	
Fuel	type	ASTM D975 / EN 590 Diesel Low sulfur or ultra low sulfur fuel only	
Fuel tank capacity	L (gal)	280 (74)	

[1]Net engine power rating per J 1995 / ISO 3046. Actual power output may vary due to conditions of specific use.

9.2 Pump

Machine Item Number		APT 4T 5200019643, 5200019644, 5200019792, 5200019793	APT 4S 5200018977, 5200019798
Pump			
Operating weight	kg (lb)	1482 (3267)	1253 (2762)
Maximum suction lift	m (ft)	7.6 (25)	
Maximum discharge head	m (ft)	45.7 (150)	
Maximum flow rate	L/min (gpm)	4921 (1300)	
Suction / discharge diameter	mm (in.)	100 (4)	
Maximum solid size	mm (in.)	51 (2)	

9.3 Lubrication

Machine Item Number		APT 4T 5200019643, 5200019644, 5200019792, 5200019793	APT 4S 5200018977, 5200019798
Lubrication			
Engine	type / qty	ASTM D975 / EN 590 Diesel / 7.4 L (7.8 qt)	
Mechanical seal housing	type / qty	ISO 68 Hydraulic Oil / 1,265 ml (42.8 oz.)	
Pump bearing housing	type / qty	ISO 68 Hydraulic Oil / 415 ml (14 oz.)	

9.4 Trailer and Skid

Machine Item Number		APT 4T 5200019643, 5200019644, 5200019792, 5200019793
Trailer		
Gross vehicle weight rating (GVWR)	kg (lb)	2304 (5080)
Tire size		ST 225 / 75D-14
Tire load rating		D

9.5 Pump Performance Curve

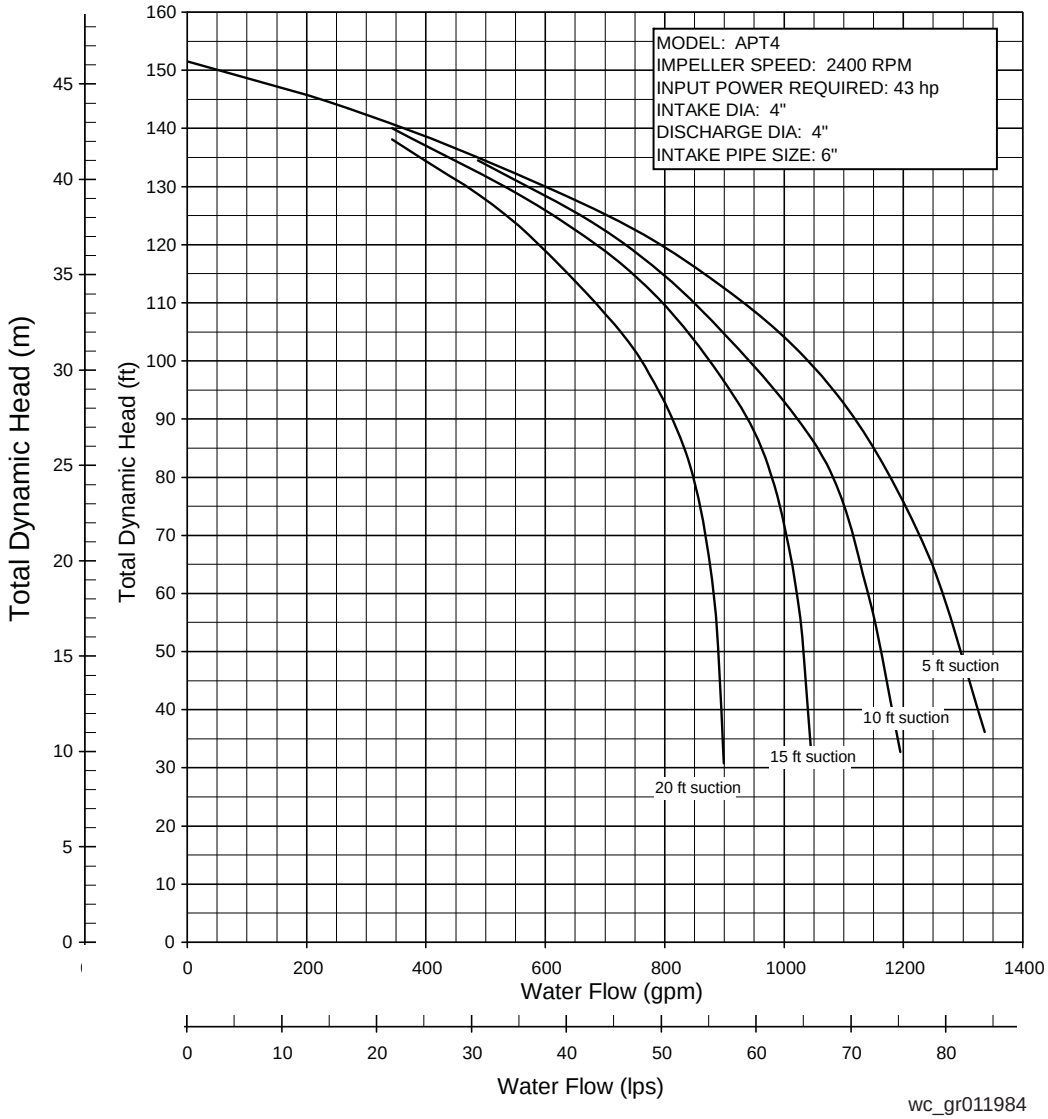

9.6 Dimensions

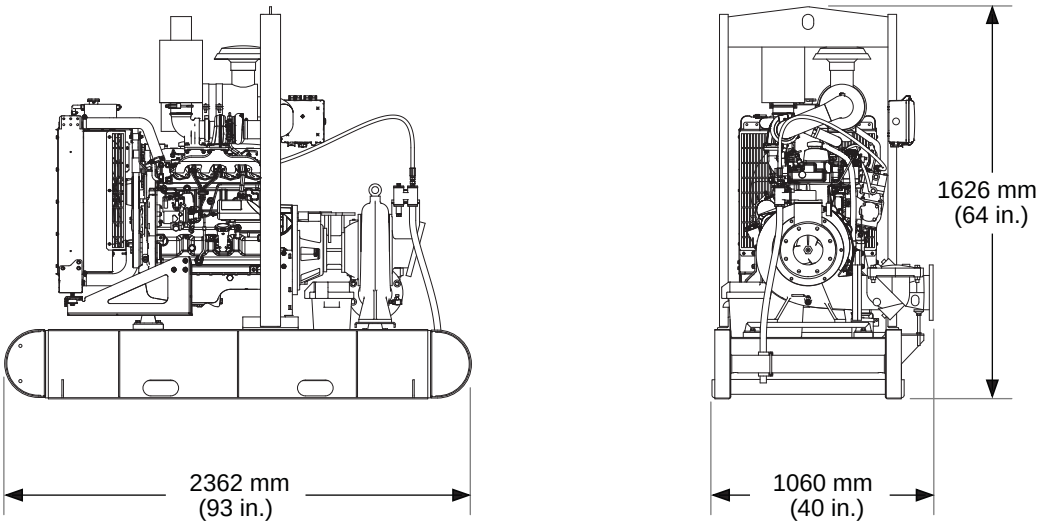

wc_gr012049

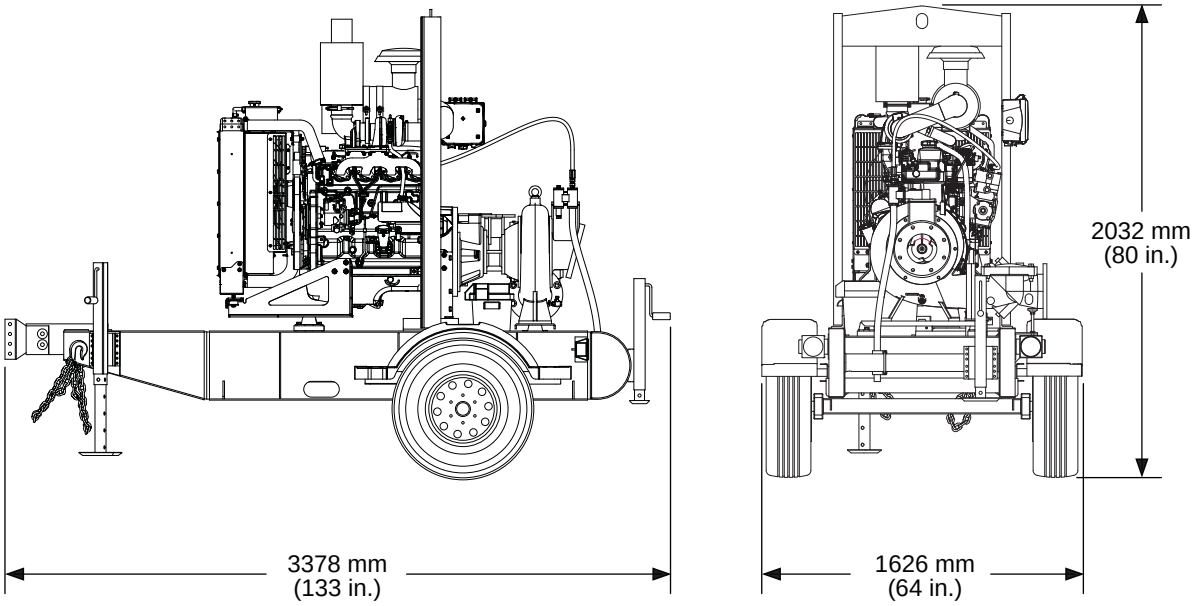

wc_gr012050

10 Technical Data—APT 6T and APT 6S, John Deere

10.1 Engine: John Deere

Machine Item Number		**APT 6T** **5200019646, 5200019647, 5200019794, 5200019795**	**APT 6S** **5200018982, 5200019799**
Engine			
Engine type		Four cylinder, 4-cycle, liquid-cooled, in-line, turbocharged, diesel engine	
Engine make		John Deere	
Engine model		4045TF290	
Emissions		Tier 4 Interim	
Maximum rated power @ rated speed[1]	kW (hp)	55 (74) @ 2,400 rpm	
Displacement	L (in^3)	4.5 (276)	
Operating speed (maximum)	rpm	2,400	
Operating speed (minimum)	rpm	1,500	
Air cleaner	type	Dry panel	
Battery	V / ccA	12 / 750	
Fuel	type	ASTM D975 / EN 590 Diesel Ultra low sulfur fuel only	
Fuel tank capacity	L (gal)	280.5 (74.1)	

[1]Net engine power rating per J 1995 / ISO 3046. Actual power output may vary due to conditions of specific use.

10.2 Pump

Machine **Item Number**		**APT 6T** **5200019646, 5200019647, 5200019794, 5200019795**	**APT 6S** **5200018982, 5200019799**
Pump			
Operating weight	kg (lb)	1813 (3997)	1583 (3491)
Maximum suction lift	m (ft)	7.6 (25)	
Maximum discharge head	m (ft)	45.7 (150)	
Maximum flow rate	L/min (gpm)	7,949 (2,100)	
Maximum pressure	bar (psi)	4.48 (65)	
Suction / discharge diameter	mm (in.)	152 (6)	
Maximum solid size	mm (in.)	76 (3)	

10.3 Lubrication

Machine **Item Number**		**APT 6T** **5200019646, 5200019647, 5200019794, 5200019795**	**APT 6S** **5200018982, 5200019799**
Lubrication			
Engine	type / qty	ASTM D975 / EN 590 Diesel / 14.7 L (15.5 qt)	
Mechanical seal housing	type / qty	ISO 68 Hydraulic Oil / 1,835 ml (62 oz.)	
Pump bearing housing	type / qty	ISO 68 Hydraulic Oil / 360 ml (12.2 oz.)	

10.4 Trailer and Skid

Machine **Item Number**		**APT 6T** **5200019646, 5200019647, 5200019794, 5200019795**
Trailer		
Gross vehicle weight rating (GVWR)	kg (lb)	2304 (5080)
Tire size		ST 225 / 75D-14
Tire load rating		D

10.5 Pump Performance Curve

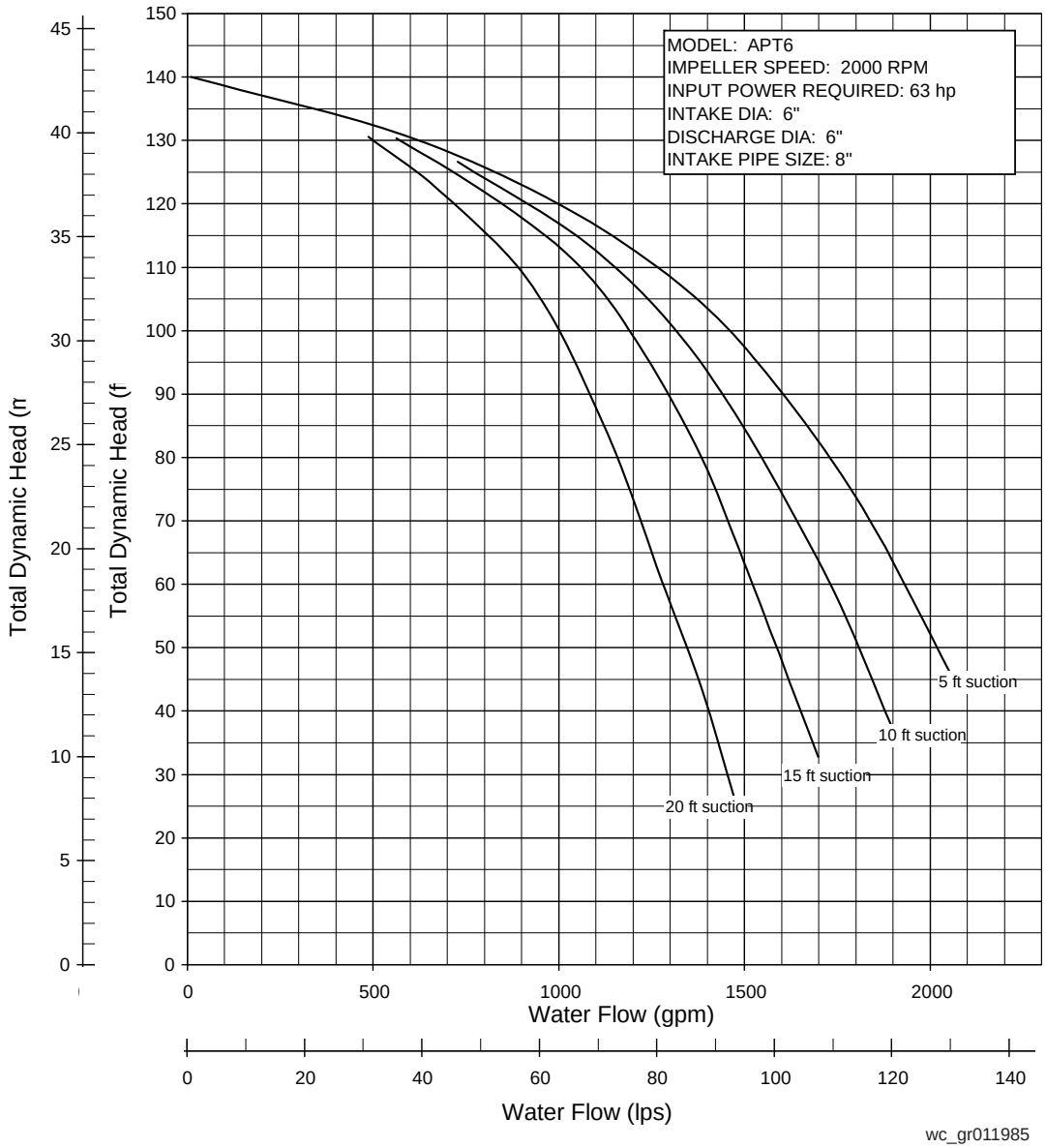

10.6 Dimensions

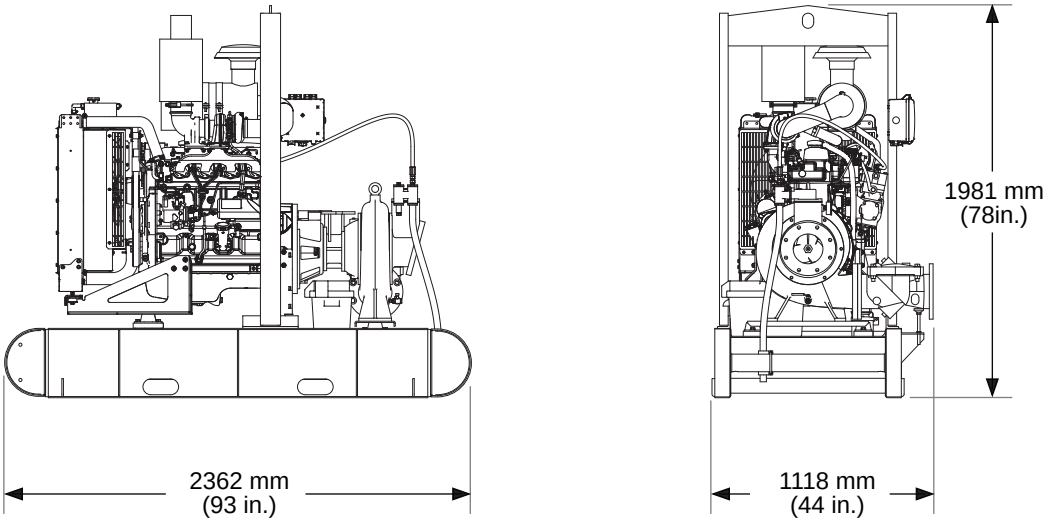

wc_gr01251

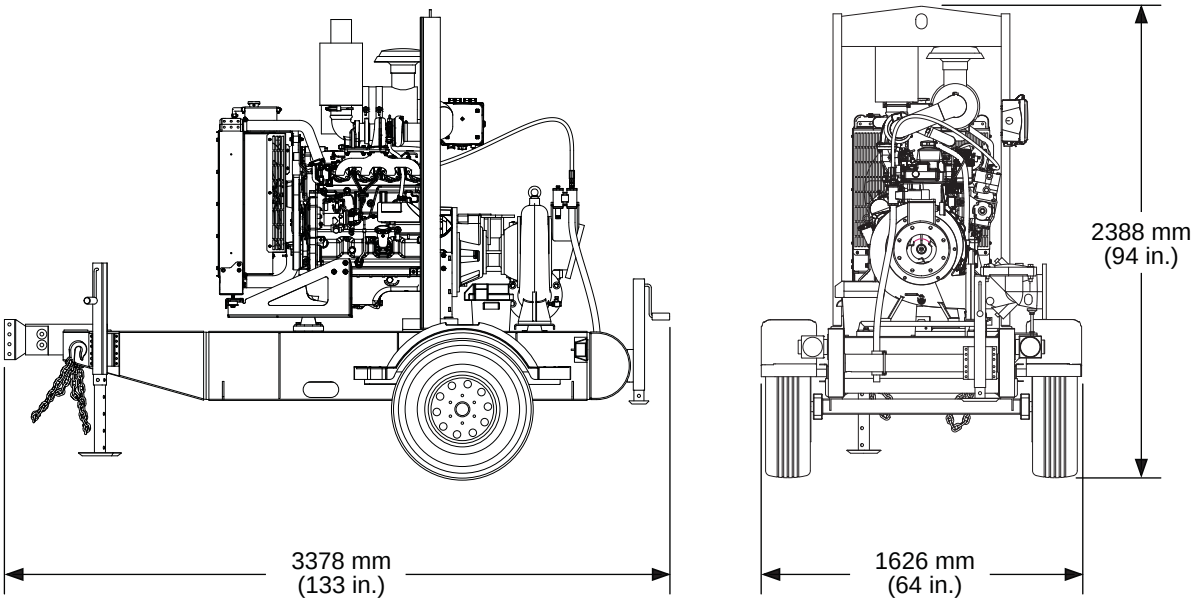

wc_gr012052

11 Technical Data—APT 8T and APT 8S, John Deere

11.1 Engine: John Deere

Machine Item Number		**APT 8T** **5200019648, 5200019649, 5200019796, 5200019797**	**APT 8S** **5200018987, 5200019800**
Engine			
Engine type		Four cylinder, 4-cycle, liquid-cooled, in-line, turbocharged, diesel engine	
Engine make		John Deere	
Engine model		4045HF280	
Emissions		Tier 3	
Maximum rated power @ rated speed[1]	kW (hp)	74 (99) @ 2,200 rpm	
Displacement	L (in^3)	4.5 (276)	
Operating speed (maximum)	rpm	2,200	
Operating speed (minimum)	rpm	1,200	
Air cleaner	type	Dry panel	
Battery	V / ccA	12 / 750	
Fuel	type	ASTM D975 / EN 590 Diesel	
Fuel tank capacity	L (gal)	338 (89)	

[1]*Net engine power rating per J 1995 / ISO 3046. Actual power output may vary due to conditions of specific use.*

11.2 Pump

Machine Item Number		APT 8T 5200019648, 5200019649, 5200019796, 5200019797	APT 8S 5200018987, 5200019800
Pump			
Operating weight	kg (lb)	2,097 (4,623)	1,867 (4,117)
Maximum suction lift	m (ft)	7.6 (25)	
Maximum discharge head	m (ft)	45.7 (150)	
Maximum flow rate	L/min (gpm)	13,248 (3,500)	
Suction / discharge diameter	mm (in.)	203 (8)	
Maximum solid size	mm (in.)	79 (3.125)	

11.3 Lubrication

Machine Item Number		APT 8T 5200019648, 5200019649, 5200019796, 5200019797	APT 8S 5200018987, 5200019800
Lubrication			
Engine	type / qty	ASTM D975 / EN 590 Diesel / 14.7 L (15.5 qt)	
Mechanical seal housing	type / qty	ISO 68 Hydraulic Oil / 2,305 ml (77.9 oz.)	
Pump bearing housing	type / qty	ISO 68 Hydraulic Oil / 810 ml (27.4 oz.)	

11.4 Trailer and Skid

Machine Item Number		APT 8T 5200019648, 5200019649, 5200019796, 5200019797
Trailer		
Gross vehicle weight rating (GVWR)	kg (lb)	2304 (5080)
Tire size		ST 225 / 75D-14
Tire load rating		D

11.5 Pump Performance Curve

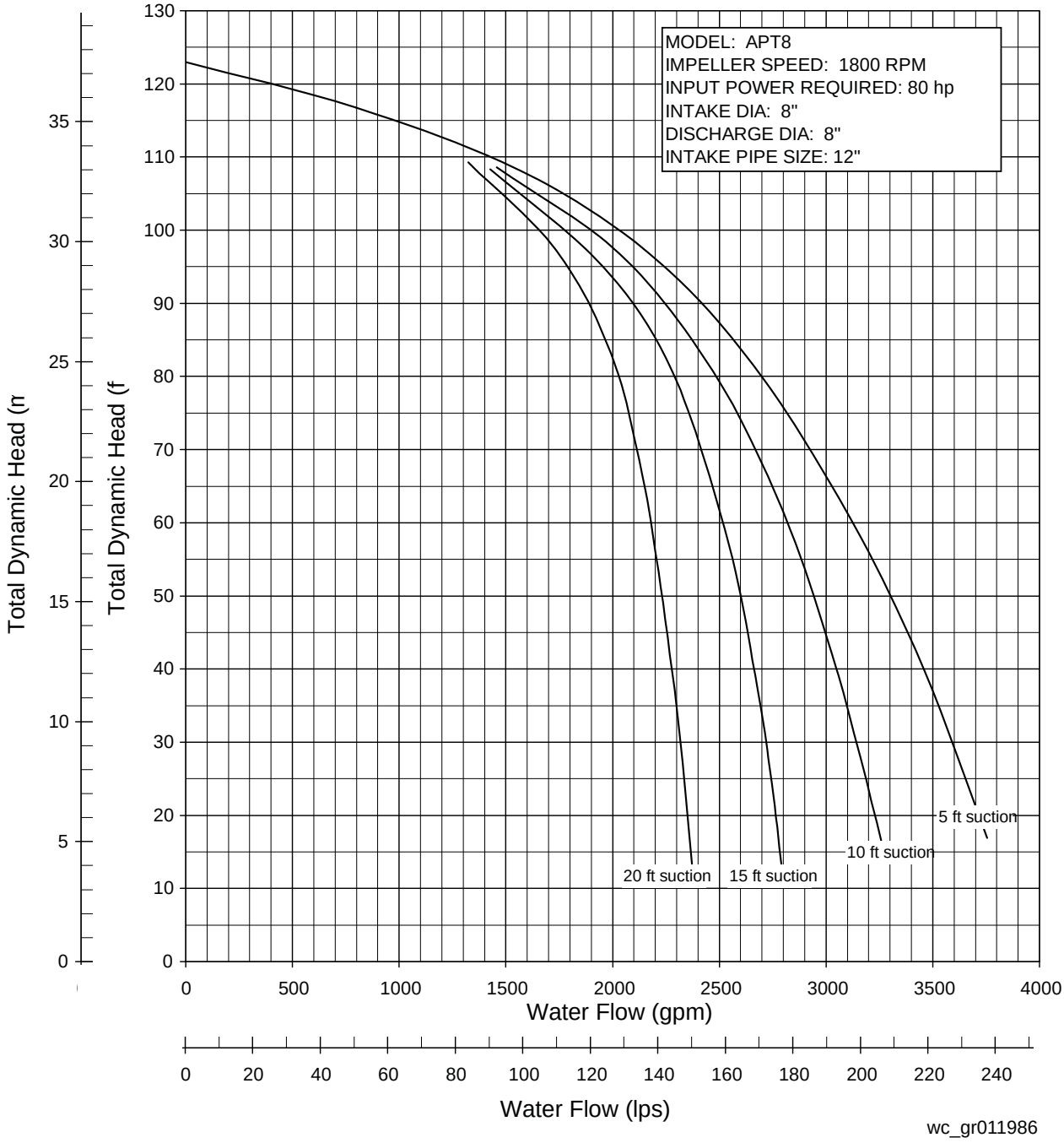

11.6 Dimensions

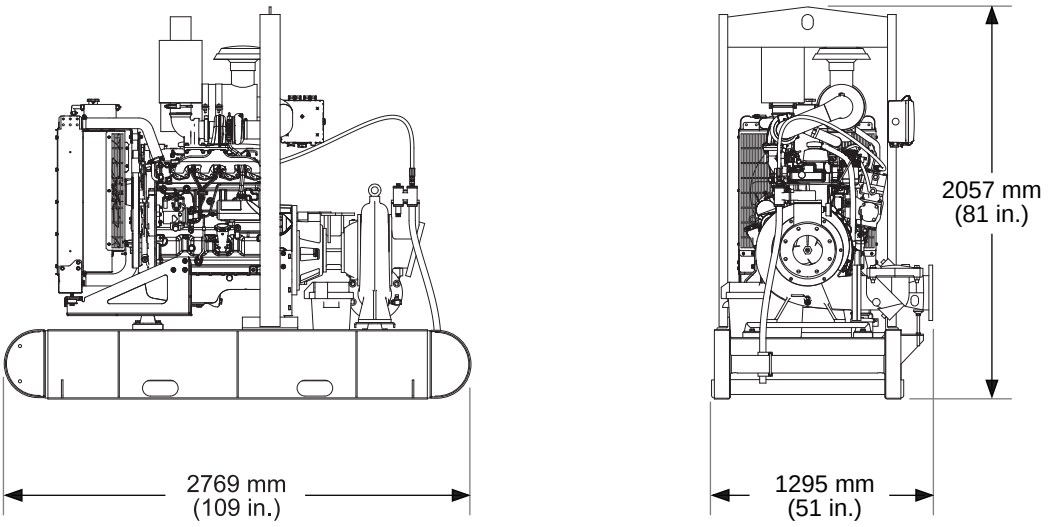

wc_gr012053

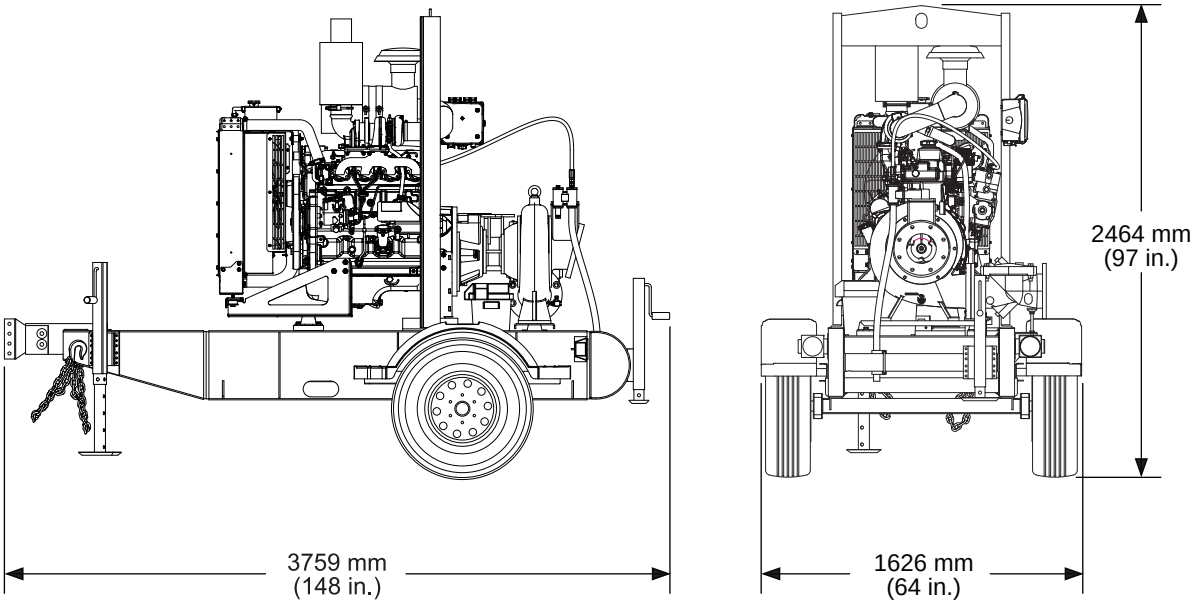

wc_gr012054

Tire Safety Information

Introduction to Tire Safety Information

Federal Regulation 49 CFR 575 requires trailer manufacturers to include certain tire information in the owner's manuals for the trailers they manufacture. This regulation requires that the information be in the English language. This chapter includes all the information required by Federal Regulation 49 CFR 575.

1. TIRE SAFETY INFORMATION

This portion of the User's Manual contains tire safety information as required by 49 CFR 575.6.

Section 1.1 contains "Steps for Determining Correct Load Limit - Trailer".

Section 1.2 contains "Steps for Determining Correct Load Limit – Tow Vehicle".

Section 1.3 contains a Glossary of Tire Terminology, including "cold inflation pressure", "maximum inflation pressure", "recommended inflation pressure", and other non-technical terms.

Section 1.4 contains information from the NHTSA brochure entitled "Tire Safety – Everything Rides On It". This brochure This brochure, as well as the preceding subsections, describes the following items;

- Tire labeling, including a description and explanation of each marking on the tires, and information about the DOT Tire Identification Number (TIN).
- Recommended tire inflation pressure, including a description and explanation of:
  A. Cold inflation pressure.
  B. Vehicle Placard and location on the vehicle.
  C. Adverse safety consequences of under inflation (including tire failure).
  D. Measuring and adjusting air pressure for proper inflation.
- Tire Care, including maintenance and safety practices.
- Vehicle load limits, including a description and explanation of the following items:
  A. Locating and understanding the load limit information, total load capacity, and cargo capacity.
  B. Calculating total and cargo capacities with varying seating configurations including quantitative examples showing / illustrating how the vehicles cargo and luggage capacity decreases as combined number and size of occupants' increases. This item is also discussed in Section 3.
  C. Determining compatibility of tire and vehicle load capabilities.
  D. Adverse safety consequences of overloading on handling and stopping on tires.

1.1. STEPS FOR DETERMINING CORRECT LOAD LIMIT – TRAILER

Determining the load limits of a trailer includes more than understanding the load limits of the tires alone. On all trailers there is a Federal certification/VIN label that is located on the forward half of the left (road) side of the unit. This certification/VIN label will indicate the trailer's Gross Vehicle Weight Rating (GVWR). This is the most weight the fully loaded trailer can weigh. It will also provide the Gross Axle Weight Rating (GAWR). This is the most a particular axle can weigh. If there are multiple axles, the GAWR of each axle will be provided.

If your trailer has a GVWR of 10,000 pounds or less, there is a vehicle placard located in the same location as the certification label described above. This placard provides tire and loading information. In addition, this placard will show a statement regarding maximum cargo capacity. Cargo can be added to the trailer, up to the maximum weight specified on the placard. The combined weight of the cargo is provided as a single number. In any case, remember: the total weight of a fully loaded trailer can not exceed the stated GVWR.

For trailers with living quarters installed, the weight of water and propane also need to be considered. The weight of fully filled propane containers is considered part of the weight of the trailer before it is loaded with cargo, and is not considered part of the disposable cargo load. Water however, is a disposable cargo weight and is treated as such. If there is a fresh water storage tank of 100 gallons, this tank when filled would weigh about 800 pounds. If more cargo is being transported, water can be off-loaded to keep the total amount of cargo added to the vehicle within the limits of the GVWR so as not to overload the vehicle. Understanding this flexibility will allow you, the owner, to make choices that fit your travel needs.

When loading your cargo, be sure it is distributed evenly to prevent overloading front to back and side to side. Heavy items should be placed low and as close to the axle positions as reasonable. Too many items on one side may overload a tire. The best way to know the actual weight of the vehicle is to weigh it at a public scale. Talk to your dealer to discuss the weighing methods needed to capture the various weights related to the trailer. This would include the weight empty or unloaded, weights per axle, wheel, hitch or king-pin, and total weight.

Excessive loads and/or underinflation cause tire overloading and, as a result, abnormal tire flexing occurs. This situation can generate an excessive amount of heat within the tire. Excessive heat may lead to tire failure. It is the air pressure that enables a tire to support the load, so proper inflation is critical. The proper air pressure may be found on the certification/VIN label and/or on the Tire Placard. This value should never exceed the maximum cold inflation pressure stamped on the tire.

1.1.1. TRAILERS 10,000 POUNDS GVWR OR LESS

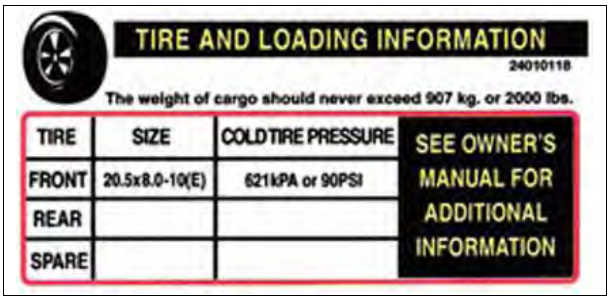

Tire and Loading Information Placard – Figure 1-1

1. Locate the statement, “The weight of cargo should never exceed XXX kg or XXX lbs.,” on your vehicle’s placard. See figure 1-1.
2. This figure equals the available amount of cargo and luggage load capacity.
3. Determine the combined weight of luggage and cargo being loaded on the vehicle. That weight may not safely exceed the available cargo and luggage load capacity.

The trailer’s placard refers to the Tire Information Placard attached adjacent to or near the trailer’s VIN (Certification) label at the left front of the trailer.

1.1.2. TRAILERS OVER 10,000 POUNDS GVWR (NOTE: THESE TRAILERS ARE NOT REQUIRED TO HAVE A TIRE INFORMATION PLACARD ON THE VEHICLE)

1. Determine the empty weight of your trailer by weighing the trailer using a public scale or other means. This step does not have to be repeated.
2. Locate the GVWR (Gross Vehicle Weight Rating) of the trailer on your trailer’s VIN (Certification) label.
3. Subtract the empty weight of your trailer from the GVWR stated on the VIN label. That weight is the maximum available cargo capacity of the trailer and may not be safely exceeded.

1.2. STEPS FOR DETERMINING CORRECT LOAD LIMIT – TOW VEHICLE

1. Locate the statement, “The combined weight of occupants and cargo should never exceed XXX lbs.,” on your vehicle’s placard.
2. Determine the combined weight of the driver and passengers who will be riding in your vehicle.
3. Subtract the combined weight of the driver and passengers from XXX kilograms or XXX pounds.
4. The resulting figure equals the available amount of cargo and luggage capacity. For example, if the “XXX” amount equals 1400 lbs. and there will be five 150 lb. passengers in your vehicle, the amount of available cargo and luggage capacity is 650 lbs. (1400-750 (5 x 150) = 650 lbs.).
5. Determine the combined weight of luggage and cargo being loaded on the vehicle. That weight may not safely exceed the available cargo and luggage capacity calculated in Step # 4.
6. If your vehicle will be towing a trailer, load from your trailer will be transferred to your vehicle. Consult the tow vehicle’s manual to determine how this weight transfer reduces the available cargo and luggage capacity of your vehicle.

1.3. GLOSSARY OF TIRE TERMINOLOGY

Accessory weight
The combined weight (in excess of those standard items which may be replaced) of automatic transmission, power steering, power brakes, power windows, power seats, radio and heater, to the extent that these items are available as factory-installed equipment (whether installed or not).

Bead
The part of the tire that is made of steel wires, wrapped or reinforced by ply cords and that is shaped to fit the rim.

Bead separation
This is the breakdown of the bond between components in the bead.

Bias ply tire
A pneumatic tire in which the ply cords that extend to the beads are laid at alternate angles substantially less than 90 degrees to the centerline of the tread.

Carcass
The tire structure, except tread and sidewall rubber which, when inflated, bears the load.

Chunking
The breaking away of pieces of the tread or sidewall.

Cold inflation pressure
The pressure in the tire before you drive.
Cord
The strands forming the plies in the tire.

Cord separation
The parting of cords from adjacent rubber compounds.

Cracking
Any parting within the tread, sidewall, or inner liner of the tire extending to cord material.

CT
A pneumatic tire with an inverted flange tire and rim system in which the rim is designed with rim flanges pointed radially inward and the tire is designed to fit on the underside of the rim in a manner that encloses the rim flanges inside the air cavity of the tire.

Curb weight
The weight of a motor vehicle with standard equipment including the maximum capacity of fuel, oil, and coolant, and, if so equipped, air conditioning and additional weight optional engine.

Extra load tire
A tire designed to operate at higher loads and at higher inflation pressures than the corresponding standard tire.

Groove
The space between two adjacent tread ribs.

Gross Axle Weight Rating
The maximum weight that any axle can support, as published on the Certification / VIN label on the front left side of the trailer. Actual weight determined by weighing each axle on a public scale, with the trailer attached to the towing vehicle.

Gross Vehicle Weight Rating
The maximum weight of the fully loaded trailer, as published on the Certification / VIN label. Actual weight determined by weighing trailer on a public scale, without being attached to the towing vehicle.

Hitch Weight
The downward force exerted on the hitch ball by the trailer coupler.

Innerliner
The layer(s) forming the inside surface of a tubeless tire that contains the inflating medium within the tire.

Innerliner separation
The parting of the innerliner from cord material in the carcass.

Intended outboard sidewall
The sidewall that contains a white-wall, bears white lettering or bears manufacturer, brand, and/or model name molding that is higher or deeper than the same molding on the other sidewall of the tire or the outward facing sidewall of an asymmetrical tire that has a particular side that must always face outward when mounted on a vehicle.

Light truck (LT) tire
A tire designated by its manufacturer as primarily intended for use on lightweight trucks or multipurpose passenger vehicles.

Load rating
The maximum load that a tire is rated to carry for a given inflation pressure.

Maximum load rating
The load rating for a tire at the maximum permissible inflation pressure for that tire.

Maximum permissible inflation pressure
The maximum cold inflation pressure to which a tire may be inflated.

Maximum loaded vehicle weight
The sum of curb weight, accessory weight, vehicle capacity weight, and production options weight.

Measuring rim
The rim on which a tire is fitted for physical dimension requirements.

Pin Weight
The downward force applied to the 5th wheel or gooseneck ball, by the trailer kingpin or gooseneck coupler.

Non-pneumatic rim
A mechanical device which, when a non-pneumatic tire assembly incorporates a wheel, supports the tire, and attaches, either integrally or separably, to the wheel center member and upon which the tire is attached.

Non-pneumatic spare tire assembly
A non-pneumatic tire assembly intended for temporary use in place of one of the pneumatic tires and rims that are fitted to a passenger car in compliance with the requirements of this standard.

Non-pneumatic tire
A mechanical device which transmits, either directly or through a wheel or wheel center member, the vertical load and tractive forces from the roadway to the vehicle, generates the tractive forces that provide the directional control of the vehicle and does not rely on the containment of any gas or fluid for providing those functions.

Non-pneumatic tire assembly
A non-pneumatic tire, alone or in combination with a wheel or wheel center member, which can be mounted on a vehicle.

Normal occupant weight
This means 68 kilograms (150 lbs.) times the number of occupants specified in the second column of Table I of 49 CFR 571.110.

Occupant distribution
The distribution of occupants in a vehicle as specified in the third column of Table I of 49 CFR 571.110.

Open splice
Any parting at any junction of tread, sidewall, or innerliner that extends to cord material.

Outer diameter
The overall diameter of an inflated new tire.

Overall width
The linear distance between the exteriors of the sidewalls of an inflated tire, including elevations due to labeling, decorations, or protective bands or ribs.

Ply
A layer of rubber-coated parallel cords.

Ply separation
A parting of rubber compound between adjacent plies.

Pneumatic tire
A mechanical device made of rubber, chemicals, fabric and steel or other materials, that, when mounted on an automotive wheel, provides the traction and contains the gas or fluid that sustains the load.

Production options weight
The combined weight of those installed regular production options weighing over 2.3 kilograms (5 lbs.) in excess of those standard items which they replace, not previously considered in curb weight or accessory weight, including heavy duty brakes, ride levelers, roof rack, heavy duty battery, and special trim.

Radial ply tire
A pneumatic tire in which the ply cords that extend to the beads are laid at substantially 90 degrees to the centerline of the tread.

Recommended inflation pressure
This is the inflation pressure provided by the vehicle manufacturer on the Tire Information label and on the Certification / VIN tag.

Reinforced tire
A tire designed to operate at higher loads and at higher inflation pressures than the corresponding standard tire.

Rim
A metal support for a tire or a tire and tube assembly upon which the tire beads are seated.

Rim diameter
This means the nominal diameter of the bead seat.

Rim size designation
This means the rim diameter and width.

Rim type designation
This means the industry of manufacturer's designation for a rim by style or code.

Rim width
This means the nominal distance between rim flanges.

Section width
The linear distance between the exteriors of the sidewalls of an inflated tire, excluding elevations due to labeling, decoration, or protective bands.

Sidewall
That portion of a tire between the tread and bead.

Sidewall separation
The parting of the rubber compound from the cord material in the sidewall.

Special Trailer (ST) tire
The "ST" is an indication the tire is for trailer use only.

Test rim
The rim on which a tire is fitted for testing, and may be any rim listed as appropriate for use with that tire.

Tread
That portion of a tire that comes into contact with the road.

Tread rib
A tread section running circumferentially around a tire.

Tread separation
Pulling away of the tread from the tire carcass.

Treadwear indicators (TWI)
The projections within the principal grooves designed to give a visual indication of the degrees of wear of the tread.

Vehicle capacity weight
The rated cargo and luggage load plus 68 kilograms (150 lbs.) times the vehicle's designated seating capacity.

Vehicle maximum load on the tire
The load on an individual tire that is determined by distributing to each axle its share of the maximum loaded vehicle weight and dividing by two.

Vehicle normal load on the tire
The load on an individual tire that is determined by distributing to each axle its share of the curb weight, accessory weight, and normal occupant weight (distributed in accordance with Table I of CRF 49 571.110) and dividing by 2.

Weather side
The surface area of the rim not covered by the inflated tire.

Wheel center member
In the case of a non-pneumatic tire assembly incorporating a wheel, a mechanical device which attaches, either integrally or separably, to the non-pneumatic rim and provides the connection between the non-pneumatic rim and the vehicle; or, in the case of a non-pneumatic tire assembly not incorporating a wheel, a mechanical device which attaches, either integrally or separably, to the non-pneumatic tire and provides the connection between tire and the vehicle.

Wheel-holding fixture
The fixture used to hold the wheel and tire assembly securely during testing.

1.4. TIRE SAFETY - EVERYTHING RIDES ON IT

The National Traffic Safety Administration (NHTSA) has published a brochure (DOT HS 809 361) that discusses all aspects of Tire Safety, as required by CFR 575.6. This brochure is reproduced in part below. It can be obtained and downloaded from NHTSA, free of charge, from the following web site:

http://www.nhtsa.dot.gov/cars/rules/TireSafety/ridesonit/tires_index.html

Studies of tire safety show that maintaining proper tire pressure, observing tire and vehicle load limits (not carrying more weight in your vehicle than your tires or vehicle can safely handle), avoiding road hazards, and inspecting tires for cuts, slashes, and other irregularities are the most important things you can do to avoid tire failure, such as tread separation or blowout and flat tires. These actions, along with other care and maintenance activities, can also:

- Improve vehicle handling
- Help protect you and others from avoidable breakdowns and accidents
- Improve fuel economy
- Increase the life of your tires.

This booklet presents a comprehensive overview of tire safety, including information on the following topics:
- Basic tire maintenance
- Uniform Tire Quality Grading System
- Fundamental characteristics of tires

- Tire safety tips.

Use this information to make tire safety a regular part of your vehicle maintenance routine. Recognize that the time you spend is minimal compared with the inconvenience and safety consequences of a flat tire or other tire failure.

1.5. SAFETY FIRST–BASIC TIRE MAINTENANCE

Properly maintained tires improve the steering, stopping, traction, and load-carrying capability of your vehicle. Underinflated tires and overloaded vehicles are a major cause of tire failure. Therefore, as mentioned above, to avoid flat tires and other types of tire failure, you should maintain proper tire pressure, observe tire and vehicle load limits, avoid road hazards, and regularly inspect your tires.

1.5.1. FINDING YOUR VEHICLE'S RECOMMENDED TIRE PRESSURE AND LOAD LIMITS

Tire information placards and vehicle certification labels contain information on tires and load limits. These labels indicate the vehicle manufacturer's information including:

- Recommended tire size
- Recommended tire inflation pressure
- Vehicle capacity weight (VCW–the maximum occupant and cargo weight a vehicle is designed to carry)
- Front and rear gross axle weight ratings (GAWR– the maximum weight the axle systems are designed to carry).

Both placards and certification labels are permanently attached to the trailer near the left front.

1.5.2. UNDERSTANDING TIRE PRESSURE AND LOAD LIMITS

Tire inflation pressure is the level of air in the tire that provides it with load-carrying capacity and affects the overall performance of the vehicle. The tire inflation pressure is a number that indicates the amount of air pressure– measured in pounds per square inch (psi)–a tire requires to be properly inflated. (You will also find this number on the vehicle information placard expressed in kilopascals (kpa), which is the metric measure used internationally.)

Manufacturers of passenger vehicles and light trucks determine this number based on the vehicle's design load limit, that is, the greatest amount of weight a vehicle can safely carry and the vehicle's tire size. The proper tire pressure for your vehicle is referred to as the "recommended cold inflation pressure." (As you will read below, it is difficult to obtain the recommended tire pressure if your tires are not cold.)
Because tires are designed to be used on more than one type of vehicle, tire manufacturers list the "maximum permissible inflation pressure" on the tire sidewall. This number is the greatest amount of air pressure that should ever be put in the tire under normal driving conditions.

1.5.3. CHECKING TIRE PRESSURE

It is important to check your vehicle's tire pressure at least once a month for the following reasons:

- Most tires may naturally lose air over time.
- Tires can lose air suddenly if you drive over a pothole or other object or if you strike the curb when parking.
- With radial tires, it is usually not possible to determine underinflation by visual inspection.

For convenience, purchase a tire pressure gauge to keep in your vehicle. Gauges can be purchased at tire dealerships, auto supply stores, and other retail outlets.
The recommended tire inflation pressure that vehicle manufacturers provide reflects the proper psi when a tire is cold. The term cold does not relate to the outside temperature. Rather, a cold tire is one that has not been driven on for at least three hours. When you drive, your tires get warmer, causing the air pressure within them to increase. Therefore, to get an accurate tire pressure reading, you must measure tire pressure when the tires are cold or compensate for the extra pressure in warm tires.

1.5.4. STEPS FOR MAINTAINING PROPER TIRE PRESSURE

- Step 1: Locate the recommended tire pressure on the vehicle's tire information placard, certification label, or in the owner's manual.
- Step 2: Record the tire pressure of all tires.
- Step 3: If the tire pressure is too high in any of the tires, slowly release air by gently pressing on the tire valve stem with the edge of your tire gauge until you get to the correct pressure.
- Step 4: If the tire pressure is too low, note the difference between the measured tire pressure and the correct tire pressure. These "missing" pounds of pressure are what you will need to add.
- Step 5: At a service station, add the missing pounds of air pressure to each tire that is underinflated.
- Step 6: Check all the tires to make sure they have the same air pressure (except in cases in which the front and rear tires are supposed to have different amounts of pressure).

If you have been driving your vehicle and think that a tire is underinflated, fill it to the recommended cold inflation pressure indicated on your vehicle's tire information placard or certification label. While your tire may still be slightly underinflated due to the extra pounds of pressure in the warm tire, it is safer to drive with air pressure that is slightly lower than the vehicle manufacturer's recommended cold inflation pressure than to drive with a significantly underinflated tire. Since this is a temporary fix, don't forget to recheck and adjust the tire's pressure when you can obtain a cold reading.

1.5.5. TIRE SIZE

To maintain tire safety, purchase new tires that are the same size as the vehicle's original tires or another size recommended by the manufacturer. Look at the tire information placard, the owner's manual, or the sidewall of the tire you are replacing to find this information. If you have any doubt about the correct size to choose, consult with the tire dealer.

1.5.6. TIRE TREAD

The tire tread provides the gripping action and traction that prevent your vehicle from slipping or sliding, especially when the road is wet or icy. In general, tires are not safe and should be replaced when the tread is worn down to 1/16 of an inch. Tires have built-in treadwear indicators that let you know when it is time to replace your tires. These indicators are raised sections spaced intermittently in the bottom of the tread grooves. When they appear "even" with the outside of the tread, it is time to replace your tires. Another method for checking tread depth is to place a penny in the tread with Lincoln's head upside down and facing you. If you can see the top of Lincoln's head, you are ready for new tires.

1.5.7. TIRE BALANCE AND WHEEL ALIGNMENT

To avoid vibration or shaking of the vehicle when a tire rotates, the tire must be properly balanced. This balance is achieved by positioning weights on the wheel to counterbalance heavy spots on the wheel-and-tire assembly. A wheel alignment adjusts the angles of the wheels so that they are positioned correctly relative to the vehicle's frame. This adjustment maximizes the life of your tires. These adjustments require special equipment and should be performed by a qualified technician.

1.5.8. TIRE REPAIR

The proper repair of a punctured tire requires a plug for the hole and a patch for the area inside the tire that surrounds the puncture hole. Punctures through the tread can be repaired if they are not too large, but punctures to the sidewall should not be repaired. Tires must be removed from the rim to be properly inspected before being plugged and patched.

1.5.9. TIRE FUNDAMENTALS

Federal law requires tire manufacturers to place standardized information on the sidewall of all tires. This information identifies and describes the fundamental characteristics of the tire and also provides a tire identification number for safety standard certification and in case of a recall.

1.5.9.1. Information on Passenger Vehicle Tires

Please refer to the diagram below.

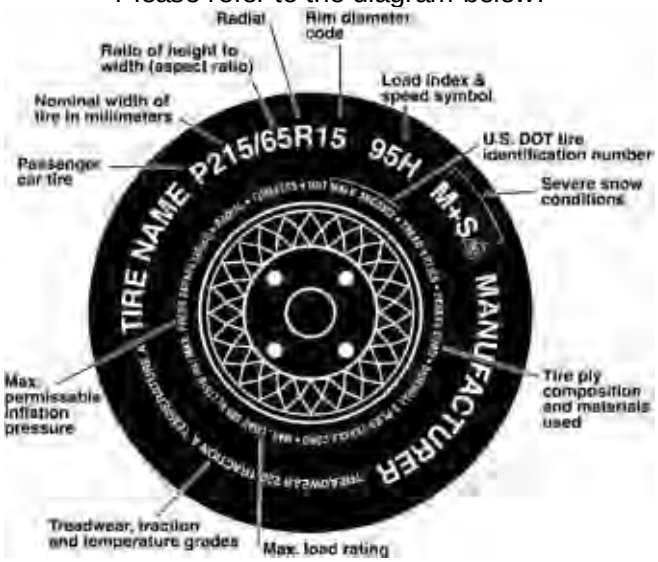

P
The "P" indicates the tire is for passenger vehicles.

Next number
This three-digit number gives the width in millimeters of the tire from sidewall edge to sidewall edge. In general, the larger the number, the wider the tire.

Next number
This two-digit number, known as the aspect ratio, gives the tire's ratio of height to width. Numbers of 70 or lower indicate a short sidewall for improved steering response and better overall handling on dry pavement.

R
The "R" stands for radial. Radial ply construction of tires has been the industry standard for the past 20 years.

Next number
This two-digit number is the wheel or rim diameter in inches. If you change your wheel size, you will have to purchase new tires to match the new wheel diameter.

Next number
This two- or three-digit number is the tire's load index. It is a measurement of how much weight each tire can support. You may find this information in your owner's manual. If not, contact a local tire dealer. Note: You may not find this information on all tires because it is not required by law.

M+S
The "M+S" or "M/S" indicates that the tire has some mud and snow capability. Most radial tires have these markings; hence, they have some mud and snow capability.

Speed Rating
The speed rating denotes the speed at which a tire is designed to be driven for extended periods of time. The ratings range from 99 miles per hour (mph) to 186 mph. These ratings are listed below. Note: You may not find this information on all tires because it is not required by law.

Tire Safety Information

Letter Rating	Speed Rating
Q	99 mph
R	106 mph
S	112 mph
T	118 mph
U	124 mph
H	130 mph
V	149 mph
W	168* mph
Y	186* mph

* For tires with a maximum speed capability over 149 mph, tire manufacturers sometimes use the letters ZR. For those with a maximum speed capability over 186 mph, tire manufacturers always use the letters ZR.

U.S. DOT Tire Identification Number
This begins with the letters "DOT" and indicates that the tire meets all federal standards. The next two numbers or letters are the plant code where it was manufactured, and the last four numbers represent the week and year the tire was built. For example, the numbers 3197 means the 31st week of 1997. The other numbers are marketing codes used at the manufacturer's discretion. This information is used to contact consumers if a tire defect requires a recall.

Tire Ply Composition and Materials Used
The number of plies indicates the number of layers of rubber-coated fabric in the tire. In general, the greater the number of plies, the more weight a tire can support. Tire manufacturers also must indicate the materials in the tire, which include steel, nylon, polyester, and others.

Maximum Load Rating
This number indicates the maximum load in kilograms and pounds that can be carried by the tire.

Maximum Permissible Inflation Pressure
This number is the greatest amount of air pressure that should ever be put in the tire under normal driving conditions.

1.5.9.2. UTQGS Information

Treadwear Number
This number indicates the tire's wear rate. The higher the treadwear number is, the longer it should take for the tread to wear down. For example, a tire graded 400 should last twice as long as a tire graded 200.

Traction Letter
This letter indicates a tire's ability to stop on wet pavement. A higher graded tire should allow you to stop your car on wet roads in a shorter distance than a tire with a lower grade. Traction is graded from highest to lowest as "AA","A", "B", and "C".

Temperature Letter
This letter indicates a tire's resistance to heat. The temperature grade is for a tire that is inflated properly and not overloaded. Excessive speed, underinflation or excessive loading, either separately or in combination, can cause heat build-up and possible tire failure. From highest to lowest, a tire's resistance to heat is graded as "A", "B", or "C".

1.5.9.3. Additional Information on Light Truck Tires

Please refer to the following diagram.

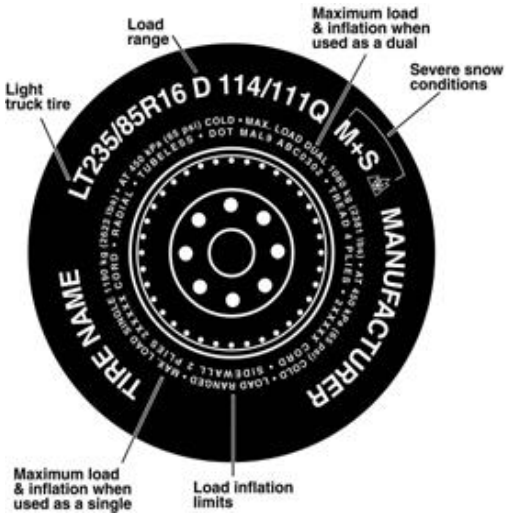

Tires for light trucks have other markings besides those found on the sidewalls of passenger tires.

LT
The "LT" indicates the tire is for light trucks or trailers.

ST
An "ST" is an indication the tire is for trailer use only.

Max. Load Dual kg (lbs) at kPa (psi) Cold
This information indicates the maximum load and tire pressure when the tire is used as a dual, that is, when four tires are put on each rear axle (a total of six or more tires on the vehicle).

Max. Load Single kg (lbs) at kPa (psi) Cold
This information indicates the maximum load and tire pressure when the tire is used as a single.

Load Range
This information identifies the tire's load-carrying capabilities and its inflation limits.

1.6. TIRE SAFETY TIPS

Preventing Tire Damage

- Slow down if you have to go over a pothole or other object in the road.
- Do not run over curbs or other foreign objects in the roadway, and try not to strike the curb when parking.

Tire Safety Checklist

- Check tire pressure regularly (at least once a month), including the spare.
- Inspect tires for uneven wear patterns on the tread, cracks, foreign objects, or other signs of wear or trauma.
- Remove bits of glass and foreign objects wedged in the tread.
- Make sure your tire valves have valve caps.
- Check tire pressure before going on a long trip.
- Do not overload your vehicle. Check the Tire Information and Loading Placard or User's Manual for the maximum recommended load for the vehicle.

PORTABLE PUMPS

www.aem.org

ASSOCIATION OF AEM EQUIPMENT MANUFACTURERS

SAFETY MANUAL

FOR OPERATING AND MAINTENANCE PERSONNEL

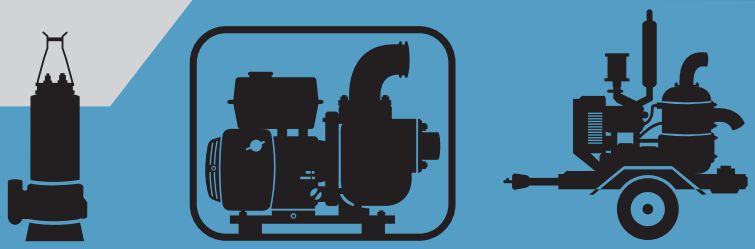

SAFETY ALERT SYMBOL

This Safety Alert Symbol means ATTENTION is involved!

The Safety Alert Symbol identifies important safety messages on machines, safety signs, in manuals, or elsewhere. When you see this symbol, be alert to the possibility of personal injury or death. Follow the instructions in the safety message.

Why is SAFETY important to YOU?

3 BIG REASONS

- **Accidents KILL or DISABLE**
- **Accidents COST**
- **Accidents CAN BE AVOIDED**

NOTICE OF COPYRIGHT PROTECTION

AEM Safety Manuals are protected as a copyrighted work with ownership duly registered with the Copyright Office, Washington, D.C. Any reproduction, translation, decompiling or other use of an AEM Safety Manual, or portion thereof, or the creation of derivative works based on an AEM Safety Manual, without the prior written approval of AEM is expressly prohibited. Copyright infringement can result in civil and criminal sanctions, damages and other penalties being imposed.

Copyright © 2004— Association of Equipment Manufacturers

REFERENCES

The following is a partial list of referenced material on safe operating practices:

U.S. Department of Labor publishes safety and health regulations and standards under the authority of the Occupational Safety and Health Act for the general construction and mining industries.
U.S. Department of Labor
Washington, DC 20210

NFPA — National Fire Protection Association
P.O. Box 9101
1 Battery March Park
Quincy, MA 02269-9101

SAE — Society of Automotive Engineers, Inc.
400 Commonwealth Drive
Warrendale, PA 15096
Publishes a list, "Operator Precautions" SAE J153 MAY 87.

AEM — Association of Equipment Manufacturers
111 East Wisconsin Avenue
Milwaukee, WI 53202

CONTENTS

	Page	Section
FOREWORD	4	
FOLLOW A SAFETY PROGRAM	5	1
PERFORM MAINTENANCE SAFELY	7	2
PREPARE FOR SAFE OPERATION	9	3
WORK SAFELY – Pumps In General	10	4
WORK SAFELY – Engine Driven Pumps	13	5
WORK SAFELY – Electric Motor Driven Pumps	15	6
WORK SAFELY – Submersibles	17	7
TEST YOUR KNOWLEDGE	19	8
FINAL WORD TO THE USER	20	9

3

FOREWORD

This safety manual is intended to point out some of the basic situations which may be encountered during the normal operation and maintenance of your equipment, and to suggest possible ways of dealing with these conditions.

Additional precautions may be necessary, depending on application, pump type, configuration and attachments used, conditions at the work-site or in the maintenance area. The manufacturer has no direct control over pump application, operation, inspection, lubrication or maintenance. Therefore, it is your responsibility to use good, safe, practices in these areas.

The information provided in this manual supplements the specific information about your pump that is contained in the manufacturer's manual(s). Other information which may affect the safe operation of your pump may be contained on safety signs, decals, markings, insurance requirements, employer's safety programs, safety codes, local, state/provincial and federal laws, rules and regulations, contracts, agreements and warranties.

It is your responsibility to read and understand this safety manual and the manufacturer's manual(s) before operating your pump. This safety manual takes you step-by-step through your working day. If you do not understand any of this information, or if errors or contradictions seem to exist, consult with your supervisor before operating your pump.

IMPORTANT: If you do not have the manufacturer's manual(s) for your particular pump, get a replacement manual from your employer, equipment dealer, or manufacturer of your pump. Keep this safety manual and the manufacturer's manual(s) with your pump.

Unauthorized modifications of pumps create hazards. Pumps must not be modified or altered unless prior approval is obtained from the manufacturer.

DO NOT PUMP VOLATILE/FLAMMABLE OR CAUSTIC/CORROSIVE LIQUIDS.

REFER TO THE OWNER'S MANUAL OR CONSULT WITH THE MANUFACTURER FOR THE PROPER PUMP MATERIALS IF YOU ARE TO PUMP HAZARDOUS CAUSTIC/CORROSIVE LIQUIDS.

KNOW THE RULES

Every employer is concerned about safety. Safe operation and proper maintenance of your pump can prevent accidents. KNOW the rules — LIVE by them. (FIG. 1)

When starting work at a new site, check with the designated safety coordinator for specific safety instructions. DON'T LEARN SAFETY THE HARD WAY.

Know the meaning of all hand signals, signal flags, signs and markings.

Know the traffic rules used at the work site. Know who the signal man is; watch and obey his signals.

Know where the fire extinguishers and first aid kits are kept and how to use them. Know where to get proper aid and assistance when needed.

Use common sense to avoid accidents. If an accident does occur, be prepared to react to it quickly and effectively.

NEVER PANIC.

Remember that **YOU are the key to safety**. Good safety practices not only protect you but also protect the people around you. Study this manual and the manufacturer's manual(s) for your specific pump. Make them a working part of your safety program. Keep in mind that this safety manual is written for only this type of equipment. Practice all other usual and customary safe working precautions, and above all (FIG. 1).

REMEMBER — SAFETY IS UP TO YOU

YOU CAN PREVENT SERIOUS INJURY OR DEATH

FIG. 1

FOLLOW A SAFETY PROGRAM

1

KNOW WHAT IT IS?

Consult your supervisor for specific instructions and personal safety equipment required.

For instance, you may need:

- Hard Hat
- Safety Shoes
- Eye Protection
- Respirators
- Heavy Gloves
- Reflector Vests
- Hearing Protection
- Face Protection
- Back Supports
- Other job related specific items

Do not wear loose clothing or any accessory — flopping cuffs, untied shoe-laces, dangling neckties and scarves, rings, wrist watches, or other jewelry — that can catch on protruding or moving parts or controls. Long hair should be securely bound to prevent entanglement with moving parts. (FIG. 3)

FIG. 2

FIG. 3

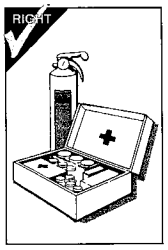

FIG. 4

BE ALERT!

Know where to get assistance. Know how to use a first aid kit and fire extinguisher or fire suppression system. (FIG. 4)

BE AWARE!

Take advantage of training programs offered.

Safety programs should require that one person at each jobsite be assigned the overall responsibility and authority for safety. Know who the person is, and COMMUNICATE with them.

Know what the jobsite rules are, and FOLLOW THE RULES. Be safety conscious, responsible and reliable. Think about safety BEFORE something happens.

BE CAREFUL!

Human error is caused by many factors: carelessness, fatigue, overload, preoccupation, incompatibility between operator and the equipment, drugs, and alcohol to name a few. Damage to the equipment can be fixed in a short period of time, but injury, or death has a lasting effect.

For your safety and safety of others, encourage your fellow workers to act within safety rules.

CLOTHING AND PERSONAL PROTECTIVE ITEMS

ALWAYS wear appropriate safety glasses, goggles or face shield when working. (FIG. 2) Proper eye protection can keep flying particles from grinding, drilling or hammering operations, or fluids such as fuel, solvents, lubricants and brake fluids from damaging your eyes. Normal glasses do NOT provide adequate protection.

ALWAYS wear a hard hat and safety shoes. (FIG. 2) ALWAYS wear hearing protectors when exposed to high noise levels for extended periods. ALWAYS wear a respirator when painting or exposed to dusty conditions. ALWAYS keep your pockets free of loose objects which can fall out and drop into machinery. (FIG. 5) Heavy gloves should be worn for many operations.

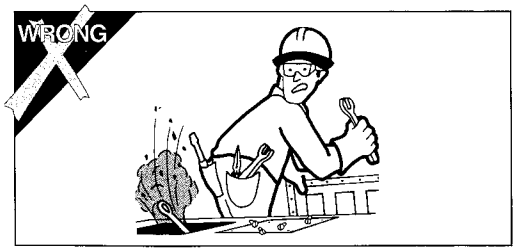

FIG. 5

EXHAUST FUMES

Engine exhaust fumes can cause sickness or death. If it is necessary to run an engine in an enclosed area, remove the exhaust fumes from the area with an exhaust pipe extension. If you do not have an exhaust pipe extension, be positive the area is adequately ventilated. (FIG. 6)

FIG. 6

HEAVY PARTS

Handle tools and heavy parts sensibly — with regard for yourself and other persons. Lower items — don't throw or drop them.

ALWAYS use proper hoisting equipment for lifting heavy loads.

ALWAYS use a back brace when lifting by hand.

PERFORM MAINTENANCE SAFELY

FIRE PREVENTION

Whenever possible use a nonflammable solvent to clean parts. Do not use gasoline or other fluids that give off harmful vapors.

If flammable fluids, such as gasoline or diesel fuel, must be used, extinguish open flames or sparks and DO NOT smoke.

Store dangerous fluids in a suitable place, in approved containers which are clearly marked. NEVER smoke in areas where flammable fluids are used or stored. (FIG. 7)

Use proper nonflammable cleaning solvents. Follow solvent manufacturer's instructions for use.

Always remove all flammable material in the vicinity of welding and/or burning operations.

ALWAYS keep the floor in the work area clean and dry. Oily, greasy floors can easily lead to falls. Wet spots, especially near electrical equipment, can be hazardous. (FIG. 7)

Know where fire extinguishers are kept — how they operate — and for what type of fire they are intended.

Check readiness of any fire detectors and fire suppression systems.

FIG. 7

LEARN TO BE SAFE

NEVER operate a pump which is new to you without first being instructed in it's proper operation. READ the operator's manual. If one has not been provided, GET ONE AND STUDY IT BEFORE OPERATING THE PUMP.

Know the meaning of all identification symbols on your controls and gauges. (FIG. 8)

Know the location of the emergency shut-down control if the machine is so equipped.

Before attempting to operate the pump, know the capabilities and limitations of the pump. Familiarize yourself with controls and instruments — their locations and functions.

Keep hands, levers and knobs clean of oil or grease to prevent slipping.

Carefully read and follow the instructions on all safety signs and decals on the pump. Keep safety signs in good condition. Replace missing or damaged safety signs.

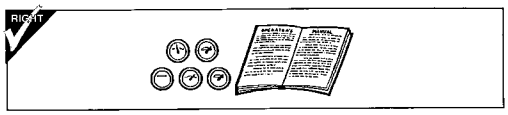

FIG. 8

CHECK IT OUT!

Know what safety devices your machine is equipped with ... and see that each item is securely in place and in operating condition. (FIG. 9)

For example:

- Drawbar Coupling Chains and Pins
- Alarms and Warning Lamps
- Reflectors
- Guards and Shields
- Drain Covers, Plugs, and Caps
- Shut-Down Devices
- Leveling Jacks
- Pressure Relief Devices
- Lifting Devices

FIG. 9

NEVER START OR OPERATE A PUMP KNOWN OR SUSPECTED TO BE DEFECTIVE OR MALFUNCTIONING.

If your daily check uncovers any items that need attention — repair, replacement, or adjustment — report them promptly. The most minor malfunction could be the result of more serious trouble — or can cause it, if pump is operated. When in doubt, attach an OSHA Lockout/Tagout device tag to the control panel to disconnected electrical power supply at breaker, on electrically driven pumps and disconnect the battery and/or spark plug wire on engine driven pumps.

WORK SAFELY — Pumps In General

SAFE WORKING PROCEDURES

USE COMMON SENSE! Most accidents can be avoided by using common sense and concentrating on the job to be done.

ONLY EXPERIENCED AND QUALIFIED personnel should install and operate pump equipment.

KNOW THE PROPER starting procedure for your equipment. Follow the manufacturer's operation manual ... to the letter.

DO NOT operate a pump without all guards and shields in place. (If OSHA required guards are damaged or misplaced, contact the manufacturer for a replacement.)

When **lifting pump** use only lifting equipment in good repair and with adequate capacity. Follow manufacturer's lifting recommendation.

Check all lubricant levels before pump installation in accordance with manufacturer's maintenance programs.

Keep hands and feet clear of moving parts. DO NOT stick fingers into a pump when in operation. Check suction strainer and hose regularly for proper submergence and to be sure it is free of obstructions.

NEVER operate a self-priming pump unless the volute is filled with liquid. The pump will not prime when dry.

PUMP only liquids for which the pump has been designed to handle.

DO NOT pump flammable, corrosive or caustic materials unless the pump and piping are explicitly designed for that purpose.

NOTE the direction of rotation — operation of a pump in the wrong direction can cause the impeller to unscrew and damage the volute case.

A pump should not be operated against a closed valve or other no flow conditions. Refer to the pump manufacturer's recommended practice for start-up, operation and shut-down procedures. **DO NOT** close down or restrict a discharge hose. **Be careful** of discharge hose whipping under pressure.

MAKE CERTAIN that whatever is to be connected to he pump is not subjected to pressures greater than those given in the manufacturer's instructions.

MAKE CERTAIN all connections are securely made and hoses under pressure are secured, with appropriate safety devices, to prevent whipping.

BE AWARE OF LIGHTNING. Stay clear of the pumping equipment during electrical storms. It can attract lightning. (FIG. 10)

OVERHEATING PRECAUTIONS

Overheated pumps can cause severe damage to the equipment and can cause severe physical burns and injury.

Operating a pump with the suction and/or discharge valve closed is a principal cause of overheating. Approach cautiously any pump that has been in operation.

DO NOT remove hoses from a pump until the system is properly cooled to ambient temperature.

DO NOT remove the cover plate or drain plugs from any overheated pump. Allow the pump to cool. Check pump temperature before opening fill port or drain plug.

If overheating of the pump casing occurs:

- **STOP** the pump immediately.
- Allow the equipment to **cool completely**.
- Slowly and cautiously **vent the pump**.
- **Refer to the manufacturer's instruction** manual before restarting the unit.
- Remove hoses carefully. Heated water can be in hoses and static head produces pressure.

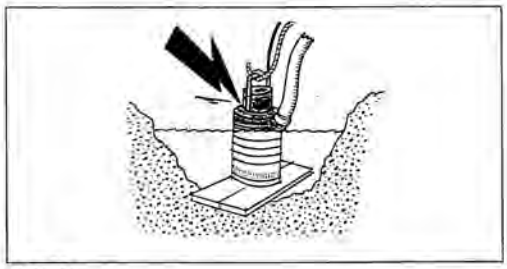

FIG. 10

WORK SAFELY — Pumps In General

BEFORE STARTING

Check the pump thoroughly at delivery for any shipping damage.

Locate the pump in an accessible location, as close to the liquid as possible.

Secure the pump after it is placed in its intended operating position so it does not tip, roll, slide or fall.

IMMEDIATELY ON STARTING THE PUMP

Observe gauges, instruments and warning lights to ensure that they are functioning and their readings are within the normal operating range.

- Be sure the immediate work area is safe for operation.
- Operate controls; make certain all operate properly and "feel" right. Accustom yourself to the "feel" of the equipment.
- Listen for any unusual noises, smell for any unusual odors; look for any signs of trouble.
- Be sure to open all manual valves slowly to prevent WATER HAMMER.
- Check all warning and safety devices and indicators.
- If safety-related defects or malfunctions are detected, SHUT DOWN the equipment. Correct the problem, or notify your supervisor. DO NOT OPERATE EQUIPMENT WITH DEFECTS OR MALFUNCTIONS UNTIL CORRECTED.
- **If an unsafe condition cannot be remedied immediately, notify your supervisor and tagout/lockout** the pump on the start switch and/or appropriate, prominent location. (FIG. 11)

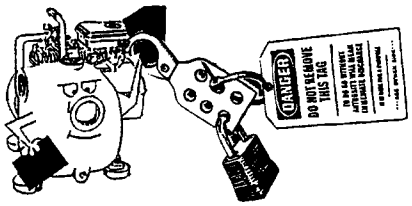

FIG. 11

SAFE WORKING PROCEDURES

Do not jump start engine battery.

When operating internal combustion engines in an enclosed area, always make provisions to pipe exhaust fumes to the outside.

EXHAUST FUMES CAN KILL: Do not operate engine driven pump equipment in a confined or enclosed space without adequate ventilation.

Exhaust gases are odorless and deadly poison.

DO NOT TOUCH: The exhaust system components get very hot and stay hot for some time after shutting the engine off.

Follow engine manufacturer's instructions explicitly on hand cranking.

Do not shut down high head pumps quickly:

A) Throttle back slowly

B) Open by-pass line

C) Should have a check valve

D) Slowly close gate valve on discharge if so equipped.

Check for fuel, oil and hydraulic fluid leaks, worn and damaged hoses/lines or power cables.

Refueling

When refueling, the following precautions must be followed:

- Add fuel of proper type and grade, only when the pump is not running and engine is cool.
- Fuel in well ventilated area.
- Turn off all electrical switches.
- Keep lighted smoking materials, flames or spark producing devices at a safe distance while refueling.
- Keep fuel nozzle in contact with tank being filled, or provide a ground to prevent static sparks from igniting fuel.
- **Do not spill fuel on hot surfaces.**
- Clean up spillage immediately.
- Do not start engine until fuel cap is secured to the fuel tank.
- **Always** make sure that fuel is being put in the fuel tank, motor oil in the proper location and hydraulic oil into hydraulic oil reservoirs.

WORK SAFELY — Engine Driven Pumps

Maintenance and Repair

All installations, operations and maintenance should be in accordance with pump and engine manufacturer's recommended operation and maintenance program. These manuals should be kept available with the equipment.

Maintenance work can be **hazardous** if not done in a careful manner. All personnel should realize the hazards and strictly follow safe practices.

NEVER perform any work on the equipment unless authorized to do so.

BEFORE ANY maintenance **work** is to be done, a LOCKOUT/TAGOUT standard device and procedure should be implemented. Prior to removal of LOCKOUT/TAGOUT, the equipment must be fully operational and all personnel accounted for. Except in cases of emergency, the removal of the LOCKOUT/TAGOUT should be done ONLY by the initiating person prior to the return to start-up (see page 12, Fig. 11).

BEFORE doing any major work, disconnect the ignition and battery if so equipped.

Always replace safety devices removed during service or repair before returning pump to operation.

Battery Servicing

- **Always wear** safety glasses and gloves when servicing or working with batteries.
- **Before servicing battery,** turn off electrical systems, then disconnect ground terminal clamp. Before installing a battery, turn off electrical equipment, then connect the battery ground clamp **last.**
- **Maintain** electrolyte at the recommended level. Check level frequently. Add distilled water to batteries only when starting up, never when shutting down.
- **Use a flashlight** to check level. **NEVER** use a flame.
- **Do not short** across battery terminals — the spark could ignite the battery gases.

  Battery acids will **burn skin**, eat holes in clothing, and can **cause blindness** if splashed in eyes.

  If you spill acid on yourself flush skin immediately with lots of water. Apply baking soda to help neutralize the acid. ***If acid gets into the eyes, flush immediately with large amounts of water and seek proper medical treatment immediately.***

SAFE WORKING PROCEDURES

***Allow only qualified personnel* to INSTALL, WIRE AND OPERATE** electric motor driven pumps. Whenever electricity is present there is the possibility of **electrocution.**

NEVER use a pump/motor in an explosive atmosphere if it is not exclusively designed for the application.

Always ground electrical units.

Make certain to connect pump motor to the right phase and voltage.

Do not run pump if voltage is not within limits.

Make sure motor rotation is in accordance with impeller rotation (which should be indicated somewhere on the pump — check the manufacturer's manual).

Make all electrical installations in accordance with National Electric Code, State and Local electrical codes.

Never use gas piping as an electrical ground.

Make sure the related electrical circuits are dead and locked out before performing any maintenance.

Follow motor manufacturer's recommended maintenance and operation instructions.

If circuit breaker or fuse is tripped, examine the system for the problem before restarting pump.

NEVER use the power cord to aid lifting the pump.

NEVER operate a pump with a plug-in type power cord without a ground fault circuit interrupter.

NEVER use cords with frayed, cut or brittle insulation. Check the cord on the pump for nicks in the insulation and for sound connections to the ground fault interrupter plug and motor.

NEVER let extension cords or the plug connections lay in water. Locate the pump so that the cord cannot fall into any water or be submerged by rising water, unless the pump is designed for such use.

NEVER handle energized power cords with wet hands.

MOTOR OVERLOAD: do not exceed the manufacturer's recommendation for maximum lift or discharge head. See manufacturer's published curve for proper sizing of motors. A misapplied motor can overheat.

WORK SAFELY — Electric Motor Driven Pumps

Pump Maintenance and Repair

MAKE SURE the pump is disconnected from the power source or the appropriate circuits are dead and OSHA Lockout/Tagout is applied before doing any maintenance or repair work on the pump.

Maintenance work can be **hazardous** if not done in a careful manner. All personnel should realize the hazards and strictly follow safe practices.

NEVER perform any work on the equipment unless authorized to do so. (FIG. 11) Before performing any maintenance or repair work, consult the manufacturer's instruction manual for recommended procedures.

Pumps with float switches or other automatic devices can start without warning if not properly locked out.

BEFORE ANY maintenance **work** is to be done, a LOCKOUT/TAGOUT standard device and procedure should be implemented. Prior to removal of LOCKOUT/TAGOUT, the equipment must be fully operational and all personnel accounted for. Except in cases of emergency, the removal of the LOCKOUT/TAGOUT should be done ONLY by the initiating person prior to the return to start-up.

ALWAYS replace safety devices removed during the service or repair before returning pump to operation.

NEVER use the power cord to aid in lifting the pump.

Sizing Extension Cords

Use the following chart to select the correct size extension cord to prevent excessive amperage draw or voltage drop which would cause the motor to overheat. **Cables that are too long or coiled** can cause a voltage drop. **Be aware** that strong sunlight can cause a voltage drop.

Amperes	Wire Gauge and Cord Length (in feet)		
	50	100	150
6	16	16	14
8	16	14	12
10	16	14	12
12	14	14	12
14	14	12	10
16	12	12	10

SAFE WORKING PROCEDURES

***ALLOW only qualified personnel* to INSTALL, WIRE and OPERATE** submersible pumps.

Whenever electricity is present there is the possibility of **electrocution.**

NEVER use a pump/motor in an explosive atmosphere, if it is not exclusively designed for that application.

ALWAYS ground the pump.

Make certain to connect the pump to the right phase and voltage.

DO NOT run the pump if voltage is not within limits. **Make all electrical installations** in accordance with National Electric Code, State and Local electrical codes.

Mount electrical control box in a vertical position, protected from the elements.

NEVER attempt to use the power cord or hydraulic hoses as a lifting or lowering device for submersibles. Attach a lifting cable to the manufacturer's recommended attachment point on the pump for lowering and lifting the pump. (FIG. 12)

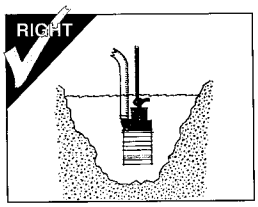

FIG. 12

NEVER position the pump directly on a soft, loose bottom. To attain maximum capacity and prevent excessive wear, position the pump so it will not burrow itself into sand or clay. Stand the pump on a plank, a bed of coarse gravel, within a perforated container, on a suitable floatation device, or retain it hanging freely by a lifting cable. (FIG. 13)

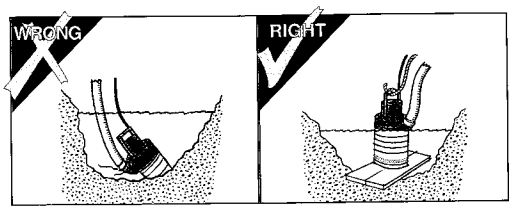

FIG. 13

7

Pump Maintenance and Repair

MAKE SURE the pump is disconnected from the power source or the appropriate circuits are dead and OSHA Lockout/Tagout is applied before doing any maintenance or repair work on the unit.

Maintenance work can be **hazardous** if not done in a careful manner. All personnel should realize the hazards and strictly follow safe practices.

NEVER perform any work on the equipment unless authorized to do so. Before performing any maintenance or repair work, consult the manufacturer's instruction manual for recommended procedures.

BEFORE ANY maintenance **work** is to be done, a LOCKOUT/TAGOUT standard device and procedure should be implemented. Prior to removal of LOCKOUT/TAGOUT, the equipment must be fully operational and all personnel accounted for. Except in cases of emergency, the removal of the LOCKOUT/TAGOUT should be done ONLY by the initiating person prior to the return to start-up.

Check oil level ONLY when pump is cool.

USE ONLY recommended oil per manufacturer's recommendation.

INSPECT ELECTRICAL WIRING for worn or damaged insulation. **INSTALL** new wiring if wires are damaged. **After repairs are made, clean the equipment before putting the pump back into position.**

7

TEST YOUR KNOWLEDGE

Do you understand this AEM SAFETY MANUAL AND ITEMS SUCH AS ...

- Your safety program?
- Your pump manufacturer's manual(s)?
- Proper clothing and personal safety equipment?
- Your pump's controls, warning signs and devices, and safety equipment?
- How to properly inspect, mount, and start your pump?
- How to check your pump for proper operation?
- Your work area and any special hazards that may exist?
- Proper operating procedures?
- Proper shutdown procedures?
- Proper maintenance procedures?
- Proper loading and unloading procedures for transporting?
- Under what conditions you should not operate your pump?

If you do not understand any of these items, consult with your supervisor BEFORE operating your equipment!

FINAL WORD TO THE USER

Remember that **YOU are the key to safety**. Good safety practices not only protect you but protect the people around you.

You have read this safety manual and the manufacturer's manual(s) for your specific pump. Make them a working part of your safety program. Keep in mind that this safety manual is written for only this type of equipment.

Practice all other usual and customary safe working precautions, and above all —

REMEMBER
SAFETY IS UP TO YOU

YOU CAN PREVENT SERIOUS INJURY OR DEATH

This manual is another in a series on the safe operation of machinery published by AEM.
For additional publications visit our web site at www.aem.org.

Association of Equipment Manufacturers
Toll free 1-866-AEM-0442
e-mail aem@aem.org
www.aem.org

FORM PP 130-2

13 Schematics

13.1 Engine Wiring

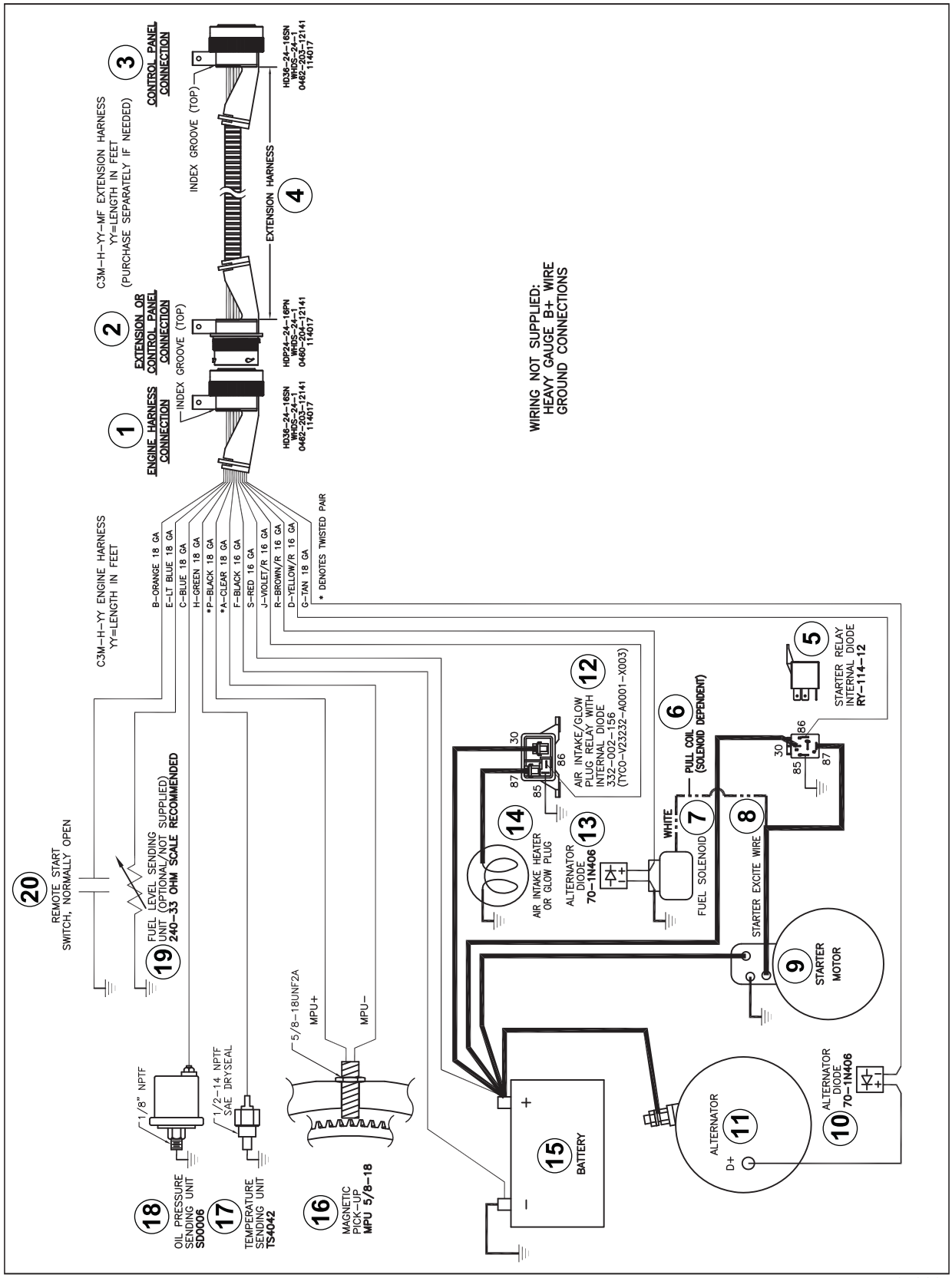

wc_gr012004

13.2 Engine Wiring Components

Ref.	Description	Ref.	Description
1	Engine harness connection	**11**	Alternator
2	Extension or control panel connection	**12**	Air intake/glow plug relay with internal diode
3	Control panel connection	**13**	Alternator diode
4	Extension harness	**14**	Air intake heater or glow plug
5	Starter relay internal diode	**15**	Battery
6	Pull coil (solenoid dependent)	**16**	Magnetic pick-up
7	Fuel solenoid	**17**	Temperature sending unit
8	Starter excite wire	**18**	Oil pressure sending unit
9	Starter motor	**19**	Fuel level sending unit
10	Alternator diode	**20**	Remote start switch, normally open

Wire Colors							
BK	Black	RD	Red	YL	Yellow	OR	Orange
GN	Green	TN	Tan	BR	Brown	PU	Purple
BU	Blue	VIO	Violet	CL	Clear	SH	Shield
PK	Pink	WH	White	GY	Gray	LB	Lt. blue

Important: For spare parts information, please see your Wacker Neuson Dealer, or visit the Wacker Neuson website at http://www.wackerneuson.com/.

Wichtig! Informationen über Ersatzteile erhalten Sie von Ihrem Wacker Neuson Händler oder besuchen Sie die Wacker Neuson Website unter http://www.wackerneuson.com/.

Important : Pour des informations sur les pièces détachées, merci de consulter votre distributeur Wacker Neuson, ou de visiter le site Internet de Wacker Neuson sur http://www.wackerneuson.com/.

Importante : Para saber más sobre las piezas de repuesto, póngase en contacto con su distribuidor de Wacker Neuson o acceda al sitio web de Wacker Neuson en http://www.wackerneuson.com/.

Importante : Per informazioni sui pezzi di ricambio, contattare il rivenditore Wacker Neuson o visitare il sito di Wacker Neuson all'indirizzo www.wackerneuson.com.

Viktigt : För information om reservdelar, kontakta din Wacker Neuson-leverantör eller besök Wacker Neusons webbplats på http://www.wackerneuson.com/.

Tärkeää : Pyydä varaosatietoja Wacker Neusonin jälleenmyyjältä tai vieraile Wacker Neusonin web-sivustolla osoitteessa http://www.wackerneuson.com/

Viktig : For informasjon om reservedeler, vennligst kontakt din Wacker Neuson-forhandler, eller besøk Wacker Neusons nettside på http://www.wackerneuson.com/.

Vigtigt : Hvis du ønsker oplysninger om reservedele, bedes du kontakte din Wacker Neuson forhandler eller besøg Wacker Neuson websiden på http://www.wackerneuson.com/.

Belangrijk! Neem contact op met uw Wacker Neuson dealer of bezoek de website van Wacker Neuson op http://www.wackerneuson.com/ voor meer informatie over reserveonderdelen.

Importante : Para obter informações sobre as peças sobresselentes, consulte o seu fornecedor da Wacker Neuson ou aceda ao site Web da Wacker Neuson em http://www.wackerneuson.com

Ważne : W celu uzyskania informacji na temat części zamiennych skontaktuj się z przedstawicielem firmy Wacker Neuson lub skorzystaj z witryny internetowej http://wackerneuson.com/.

Důležité upozornění! Pro informace o náhradních dílech, prosím, kontaktujte svého Wacker Neuson dealera, nebo navštivte webové stránky http://www.wackerneuson.com/.

FONTOS: A pótalkatrészekre vonatkozó információkért kérjük, forduljon Wacker Neuson kereskedőjéhez vagy látogasson el a Wacker Neuson weboldalára a következő címen: http://www.wackerneuson.com/.

Важно! Для ознакомления с информацией о запасных частях, пожалуйста, обратитесь к местному торговому представителю компании Wacker Neuson или посетите веб-сайт http://www.wackerneuson.com/.

Σημαντικό : Για πληροφορίες σχετικά με τα ανταλλακτικά, μιλήστε με τον αντιπρόσωπό σας της Wacker Neuson, ή επισκεφθείτε τον ιστότοπο http://www.wackerneuson.com/.

Važno : Za rezervne dijelove obratite se svom Wacker Neuson prodavaču ili posjetite mrežne stranice tvrtke Wacker Neuson: http://www.wackerneuson.com/.

Önemli : Yedek parça bilgileri için Wacker Neuson Bayinize bakın veya Wacker Neuson web sitesini ziyaret edin. http://www.wackerneuson.com/

重要 交換部品の情報については、ワッカーノイソンディーラーにお問い合わせ頂くか、ワッカーノイソンウェブサイト http://www.wackerneuson.com/ をご覧ください。

重要 有关备件信息，请咨询您的威克诺森经销商或访问威克诺森网站：http://www.wackerneuson.com/。

Important : Pentru informaţii referitoare la piesele de schimb, vă rugăm să vă adresaţi distribuitorului Wacker Neuson sau să vizitaţi site-ul web Wacker Neuson la adresa http://www.wackerneuson.com/.

Важно : За информация относно резервни части, моля, обърнете се към местния дилър на Wacker Neuson или посетете уебсайта на Wacker Neuson на адрес http://www.wackerneuson.com/.

Wacker Neuson Produktion GmbH & Co. KG, Preußenstraße 41, D-80809 München,
Tel.: +49-(0)89-3 54 02-0 Fax: +49 - (0)89-3 54 02-390
Wacker Neuson Production Americas LLC, N92W15000 Anthony Ave., Menomonee Falls, WI. 53051
Tel.: (262) 255-0500 Fax: (262) 255-0550 Tel.: (800) 770-0957
Wacker Neuson Limited - Room 1701–03 & 1717–20, 17/F. Tower 1, Grand Century Place, 193 Prince Edward Road West, Mongkok, Kowloon, Hongkong. Tel: (852) 3605 5360, Fax: (852) 2758 0032