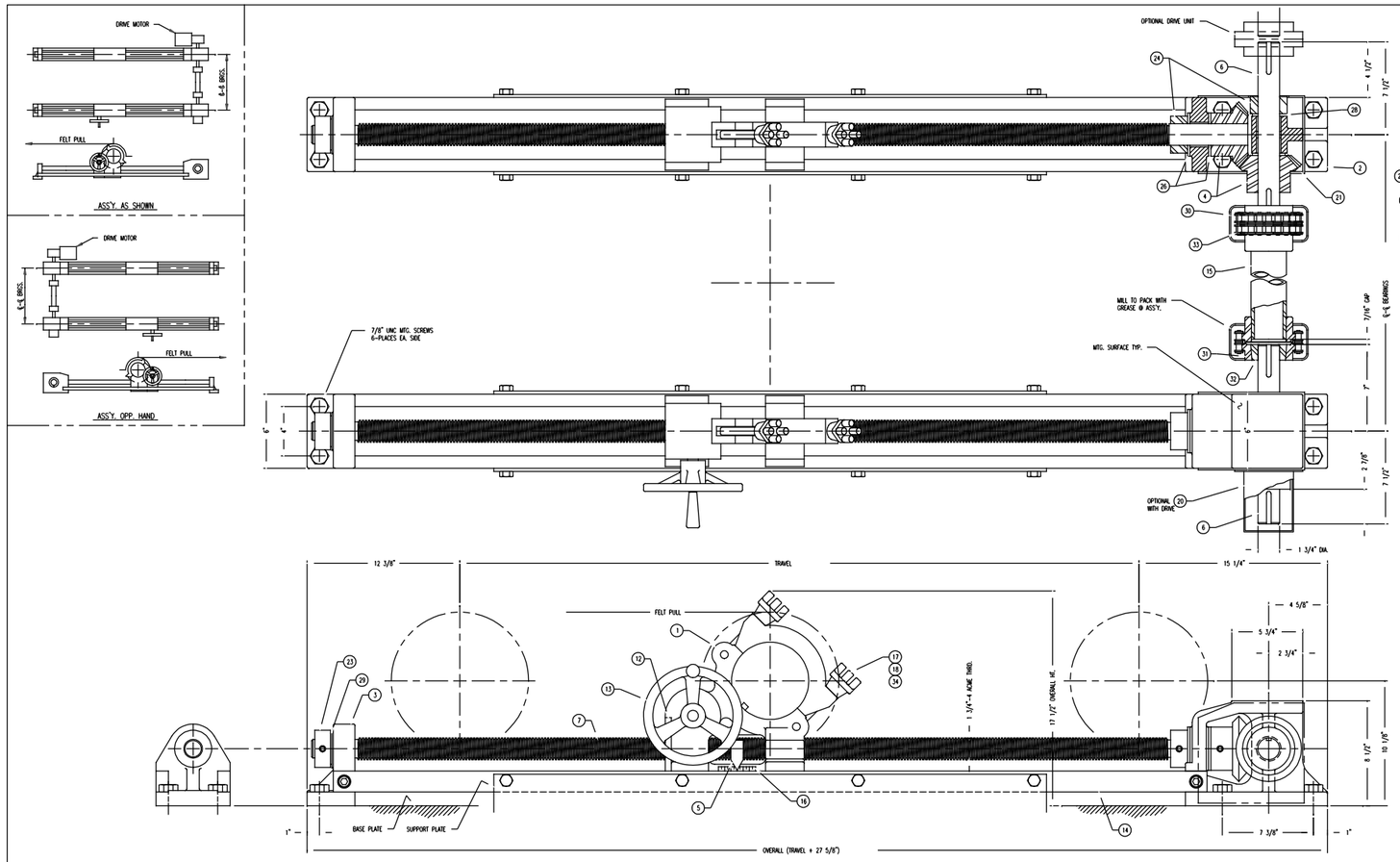


| ITEM | QUAN. | DESCRIPTION | MATERIAL |
|---|---|---|---|
| 34 | (4) | JERGENS KNOB #40704 | |
| 33 | (2) | DODGE CHAIN ASSEMBLY #100492 | |
| 32 | (2) | DODGE TAPERLOCK #2012-1 3/4" | |
| 31 | (2) | DODGE #6020 COUPLING TYPE FF | |
| 30 | (2) | DODGE #6020 COUPLING COVER | |
| 29 | (2) | SYMMCO #ST-4880-4 | |
| 28 | (4) | SYMMCO #ST-5684-4 | |
| 27 | (2) | SYMMCO #ST-2848-4 | |
| 26 | (4) | SYMMCO #ST-48112-6 (BORE I.D. TO 1.755" DIA.) | |
| 25 | (1) | MARTIN WORM #WG6 | |
| 24 | | 1 3/4" COLLAR | |
| 23 | A10-001-5 | 1 1/2" COLLAR | |
| 22 | | 7/8" COLLAR | |
| 21 | B22-003-5 | GEAR GUARD | |
| 20 | A22-003-21 | SHAFT GUARD | |
| 19 | A11-001-13 | CAP BEARING HOUSING | |
| 18 | A10-002-6 | EYE BOLT | |
| 17 | A10-001-1 | STAINLESS STEEL PIN | |
| 16 | A22-001-20 | ADJUSTMENT PLAQUE | |
| 15 | A22-006-6 | CROSS SHAFT | |
| 14 | A22-003-17 | SLIDE BAR | |
| 13 | A22-003-16 | HANDWHEEL - 8" | |
| 12 | A22-006-4 | COVER PLATE | |
| 11 | A22-003-13 | DRIVE NUT (REAR) | |
| 10 | A22-003-12 | WORM GEAR DRIVE NUT (FRONT) | |
| 9 | A22-003-11 | BUSHING - WORM SHAFT | |
| 8 | A22-003-10 | WORM SHAFT | |
| 7 | A22-006-2 | ADJUSTING SCREW | |
| 6 | A22-003-8 | DRIVE SHAFT | |
| 5 | A22-006-3 | INDICATOR NUT | |
| 4 | A22-003-65 | STAINLESS STEEL MITRE GEARS | |
| 3 | B22-003-3 | REAR SUPPORT BRACKET | |
| 2 | C22-006-2 | GEAR BOX HOUSING | |
| 1 | C22-006-1 | SLIDE BRACKET | |
| PART | DWG. NO. | DESCRIPTION | |

| F.O.# | QTY. | ASSEMBLY | TRAVEL | ℄-℄ BRGS. | BASE PLATE | SUPPORT PL. | DRIVE | NOTES |
|---|---|---|---|---|---|---|---|---|

| F.O.# | QTY. | ASSEMBLY | TRAVEL | ℄-℄ BRGS. | BASE PLATE | SUPPORT PL. | DRIVE | NOTES |
|---|---|---|---|---|---|---|---|---|

| NO. | DATE | DESCRIPTION |
|---|---|---|
| | | REVISION |

**MIAMI MACHINE CORP.**
**OVERPECK, OHIO 45055**

TITLE
ASS'Y. OF WET FELT STRETCH

THIS DRAWING IS PRIVATE AND ALL RIGHTS THEREOF ARE AND SHALL REMAIN THE PROPERTY OF THE MIAMI MACHINE CORP. AND MAY NOT BE REPRODUCED OR USED FOR ANY PURPOSE WITHOUT ITS WRITTEN CONSENT

TOLERANCES EXCEPT SHOWN OTHERWISE NOTED
FRACT. ± 1/8 DECIM. PLACES ± .001 ANGULAR ± 1/2°

| SCALE | BY | DATE | DWG NO. |
|---|---|---|---|
| 3"=12" | Mark Pennington | 17 JAN. 92 | D22-005-A |