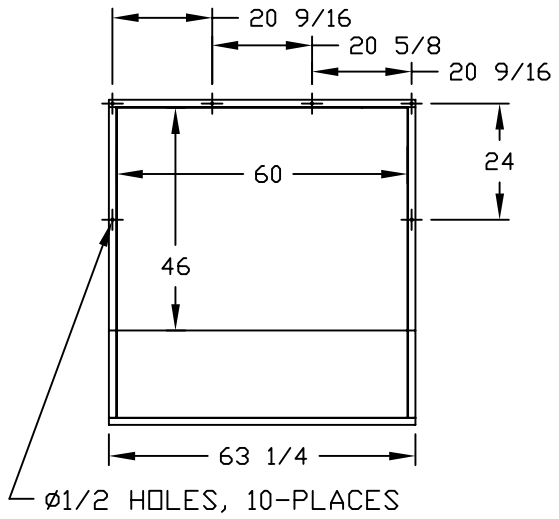

FEED CHUTE FLANGE DETAIL

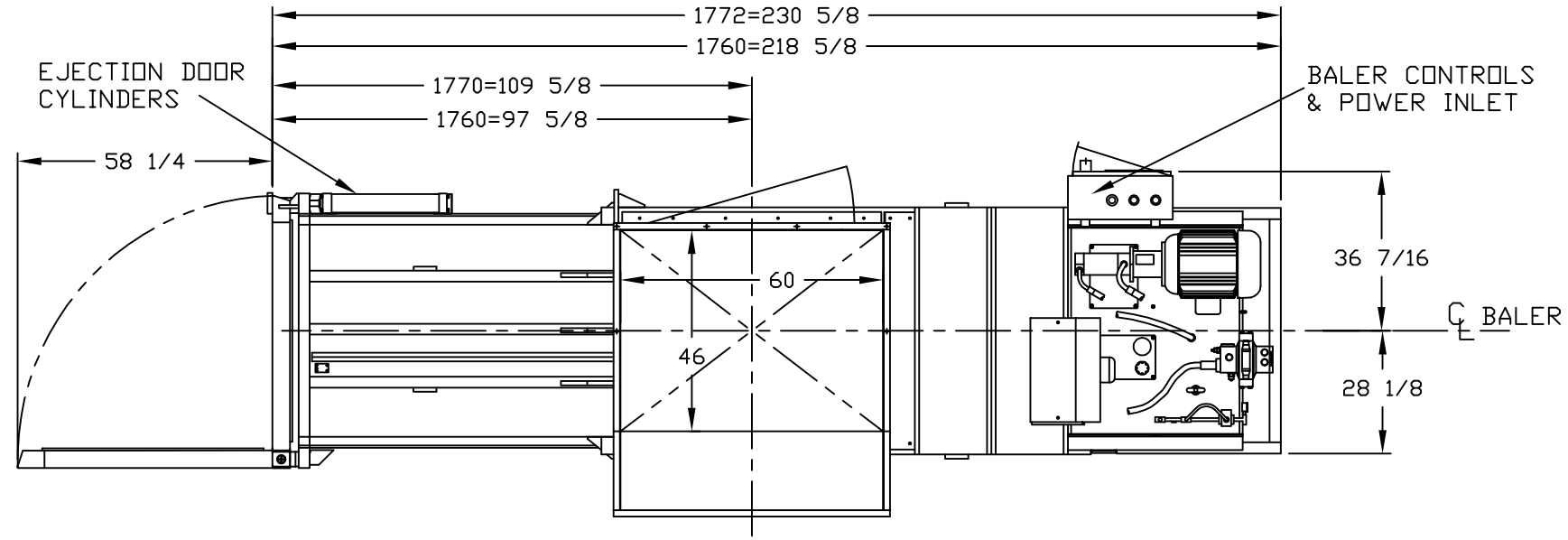

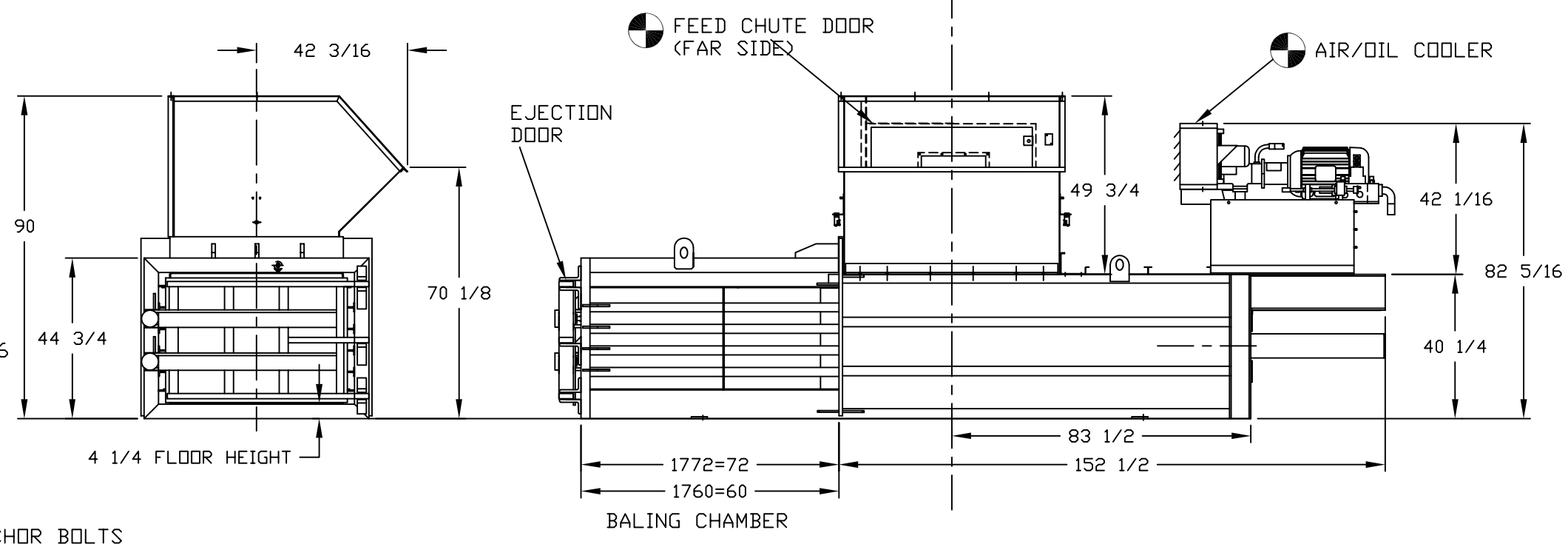

CHAMBER WIDTH = 48
CHAMBER HEIGHT = 36

OPTIONAL EQUIPMENT SYMBOL

BALER CONFIGURATION

BALER - LEFT

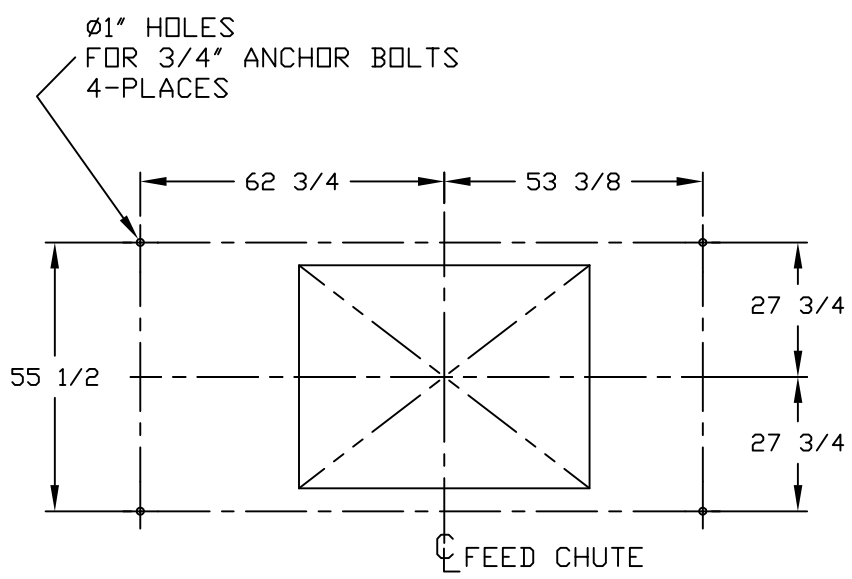

AS WITH ANY OTHER PIECE OF EQUIPMENT, ADEQUATE CLEARANCE SHOULD BE PROVIDED FOR USUAL CLEANING, SERVICE, AND MAINTENANCE OPERATIONS.

TOLERANCES - UNLESS OTHERWISE SPECIFIED:

FRACTIONAL	+/- 1/64	
DECIMAL	0.000	+/- 0.005
DECIMAL	0.00	+/- 0.01

THIRD ANGLE PROJECTION

THIS DRAWING IS THE PROPERTY OF EAST CHICAGO MACHINE TOOL CORP.

THE INFORMATION DISCLOSED HEREIN IS NOT TO BE REPRODUCED, COPIED OR OTHERWISE DISPOSED OF, DIRECTLY OR INDIRECTLY AND IS NOT TO BE USED IN WHOLE OR IN PART TO ASSIST IN MAKING OR TO FURNISH ANY INFORMATION FOR THE MAKING OF DRAWINGS, PRINTS, APPARATUS, OR PARTS THEREOF, EXCEPT AS SPECIFICALLY AUTHORIZED IN WRITING BY EAST CHICAGO MACHINE TOOL CORP.

NO.		DATE	IN.	REMARKS

BALEMASTER®

DIV. OF EAST CHICAGO MACHINE TOOL CORP.
CROWN POINT, INDIANA

1700 BALER LAYOUT

DO NOT SCALE WORK TO DIMENSIONS

SCALE: 1=40

B/M REQ'D: YES / NO

DR. CES | CH. | APP.

DATE: 12/06/95

234B0126-01

h g f e d c b a