REV#	REVISION DATE	BY	REVISION INFORMATION
–	–	–	–
–	–	–	–

***CUSTOMER NOTE: CONSULT LOCAL CODES FOR EXHAUST STACK HEIGHT REQUIREMENTS ABOVE ROOFLINE. INSTALLATION IS NOT TO EXCEED A TOTAL RUNNING LENGTH OF 30' W/2-45° ELBOWS. STACK MUST BE DIAMETER SHOWN AT MINIMUM.

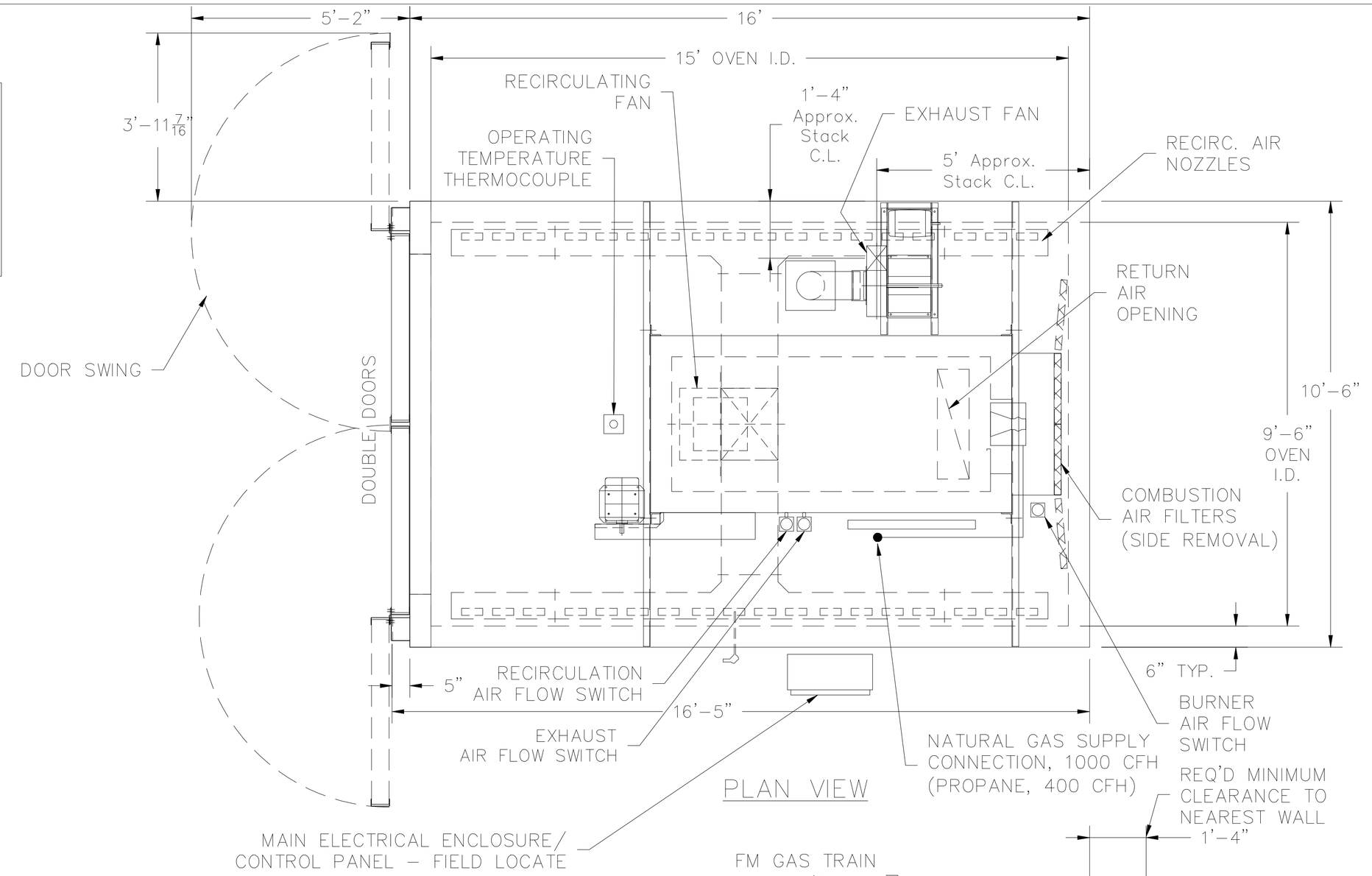

PLAN VIEW

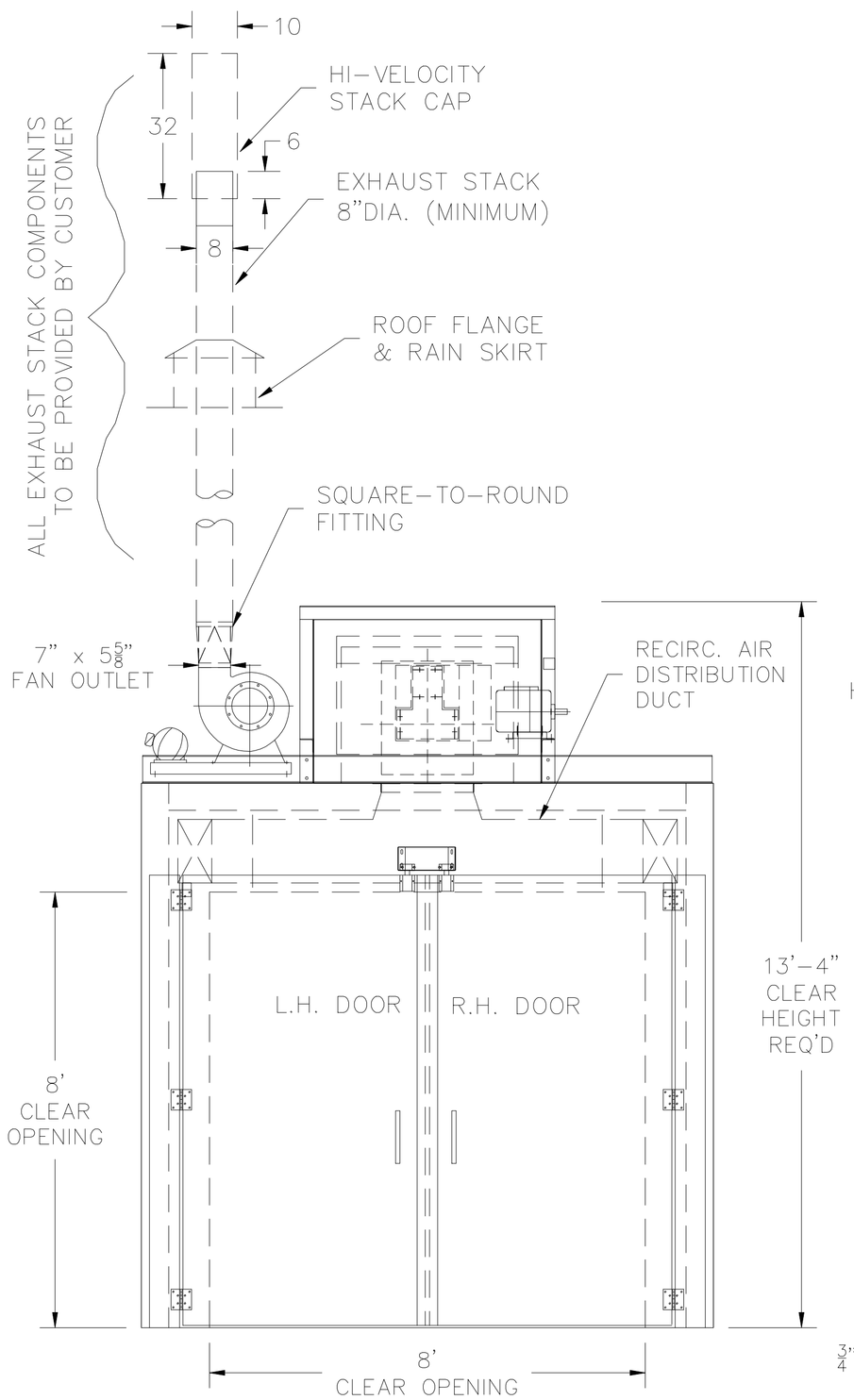

END VIEW

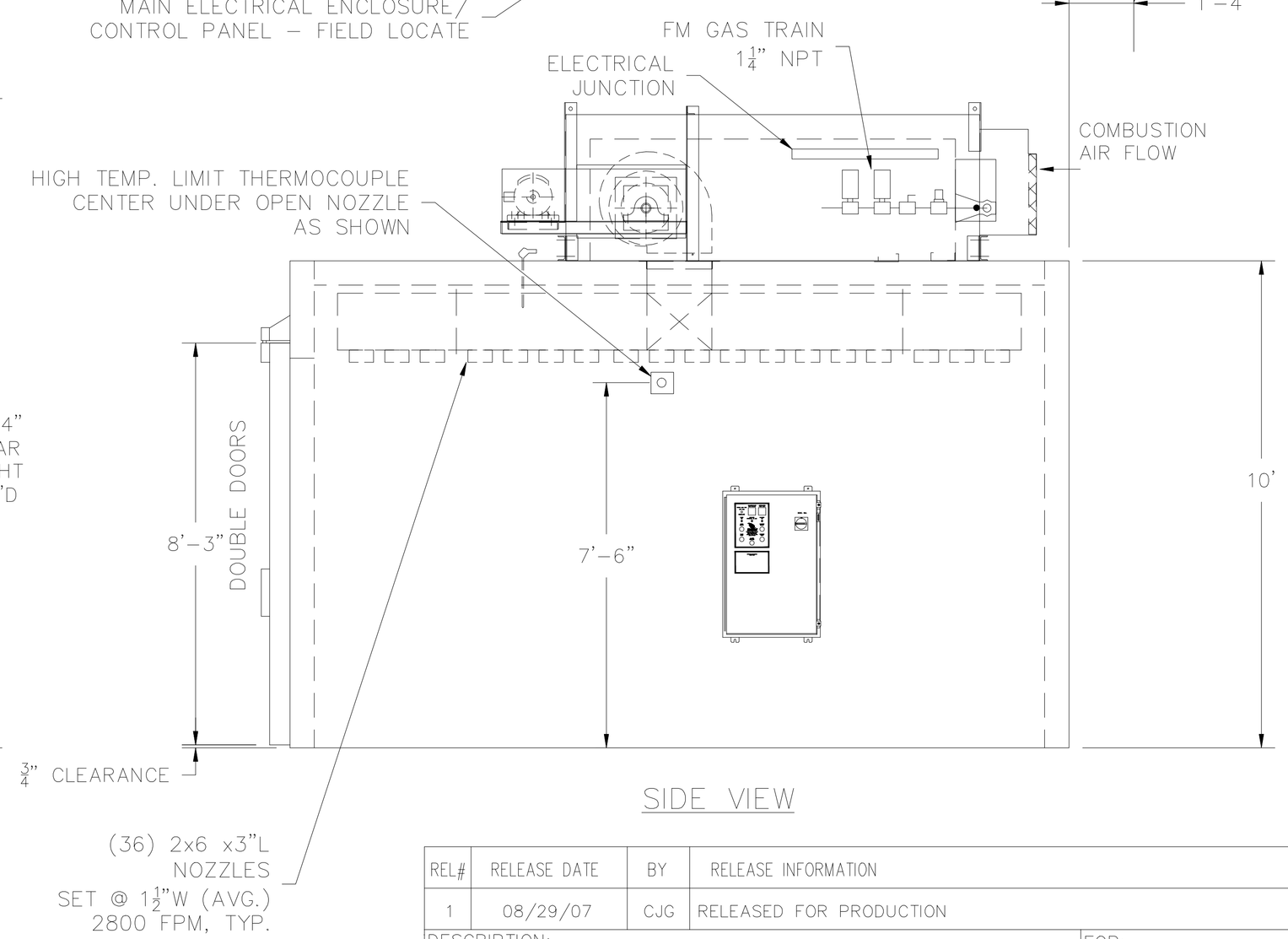

SIDE VIEW

BATCH OVEN SPECIFICATIONS:

RECIRCULATING FAN MOTOR	15"FC, 6,200 CFM @ 1.4" SP 5 HP 1750 RPM, ODP
EXHAUST FAN MOTOR	COMPACT-GI 126, 900 ACFM 1"SP@70°F 3/4 HP 1750 RPM, ODP
BURNER CAPACITY	2 FT. MAXON NP-I 1,000,000 BTU/Hr
GAS TRAIN	FACTORY MUTUAL, 1 1/4" NPT
SUPPLY GAS PRESSURE DOWN-REGULATOR (IF REQ'D)	14"W.C. (MINIMUM, @Full Flow) 4 PSI (MAXIMUM) BY OTHERS
FUEL HEATING VALUE	NATURAL GAS or PROPANE 1000 BTU/CU.FT. 2500 BTU/CU.FT.
ELECTRICAL SERVICE	460V/3PH/60HZ
ELECTRICAL CONTROL PANEL	"UL" LISTED
CONTROL OPTIONS	NONE
ALTITUDE	LESS THAN 1000 FT.
MAX. POWDER LOADING	37 LB/BATCH
MAX. SOLVENT LOADING	0.51 GAL/BATCH
MINIMUM PRE-IGNITION PURGE	12 MINUTES @ 900 CFM EXHAUST
OPERATING TEMPERATURE	450°F
WALL, ROOF, B.BOX PANELS	20 GA. ALUMINIZED OVER 6" INSULATION
OVEN FLOOR	NONE
EXHAUST STACK/ROOF FLASHING	BY OTHERS
CLEAR WORK OPENING	8'W x 8'H x 15'L
FIRE PROTECTION	BY OTHERS
ACCESS LADDERS/MEZZANINES	BY OTHERS

NOTES:
1) THE SAFETY STANDARD FOR INDUSTRIAL OVENS, NFPA 86, REQUIRES THIS OVEN BE LOCATED SO AS TO KEEP TEMPERATURES AT COMBUSTIBLE FLOORS, CEILINGS, AND WALLS BELOW 160°F. EQUIPMENT OWNER AND END USER ARE RESPONSIBLE FOR THE RISKS ASSOCIATED WITH POTENTIAL EXPOSURE OF NEARBY COMBUSTIBLE SURFACES TO TEMPERATURES EXCEEDING 160°F, FOR AVOIDING THE OCCURRENCE OF SUCH EXPOSURE, AND FOR SATISFYING ALL LOCAL, NATIONAL AND OTHER APPLICABLE CODES.
2) NOT INTENDED FOR 24 HR/DAY OPERATION.
3) REFER TO SAFETY LABEL ON CONTROL PANEL FOR FURTHER CONDITIONS OF USE OF THIS EQUIPMENT.

NOTE: THE ELECTRICAL CONTROL PANEL IS SHIPPED LOOSE AND CAN BE INSTALLED ON THE OVEN OR AT A REMOTE LOCATION.

REL#	RELEASE DATE	BY	RELEASE INFORMATION
1	08/29/07	CJG	RELEASED FOR PRODUCTION

Plotted: Sep 28, 2007 – 08:25

THIS DRAWING IN DESIGN AND DETAIL IS THE PROPERTY OF RAPID ENGINEERING, AND MUST NOT BE USED EXCEPT IN CONNECTION WITH OUR WORK. ALL THE RIGHTS OF DESIGN AND INVENTION ARE RESERVED BY RAPID ENGINEERING.

DESCRIPTION:
8815 BATCH OVEN LAYOUT – I.I.Y.
DOORS ONE END, TOP-MOUNT BURNER BOX

FOR:
BARRETT
STOLL

RAPID ENGINEERING
COMSTOCK PARK,MICH 49321

COMMENTS: (*)

FILE LOCATION: N:\PROCESS\JOBS\JOBS2007\072104

PROCESSING NOTE: –

SCALE:	DRAWN:	DATE:	DWG #:	REVISION	SHEET
1/4" = 1'	CJG	08/29/07	20503318	–	C1
PLOT RATIO: 1:48	CHECKED: –	SO #: 072104	WO #: 07210410		