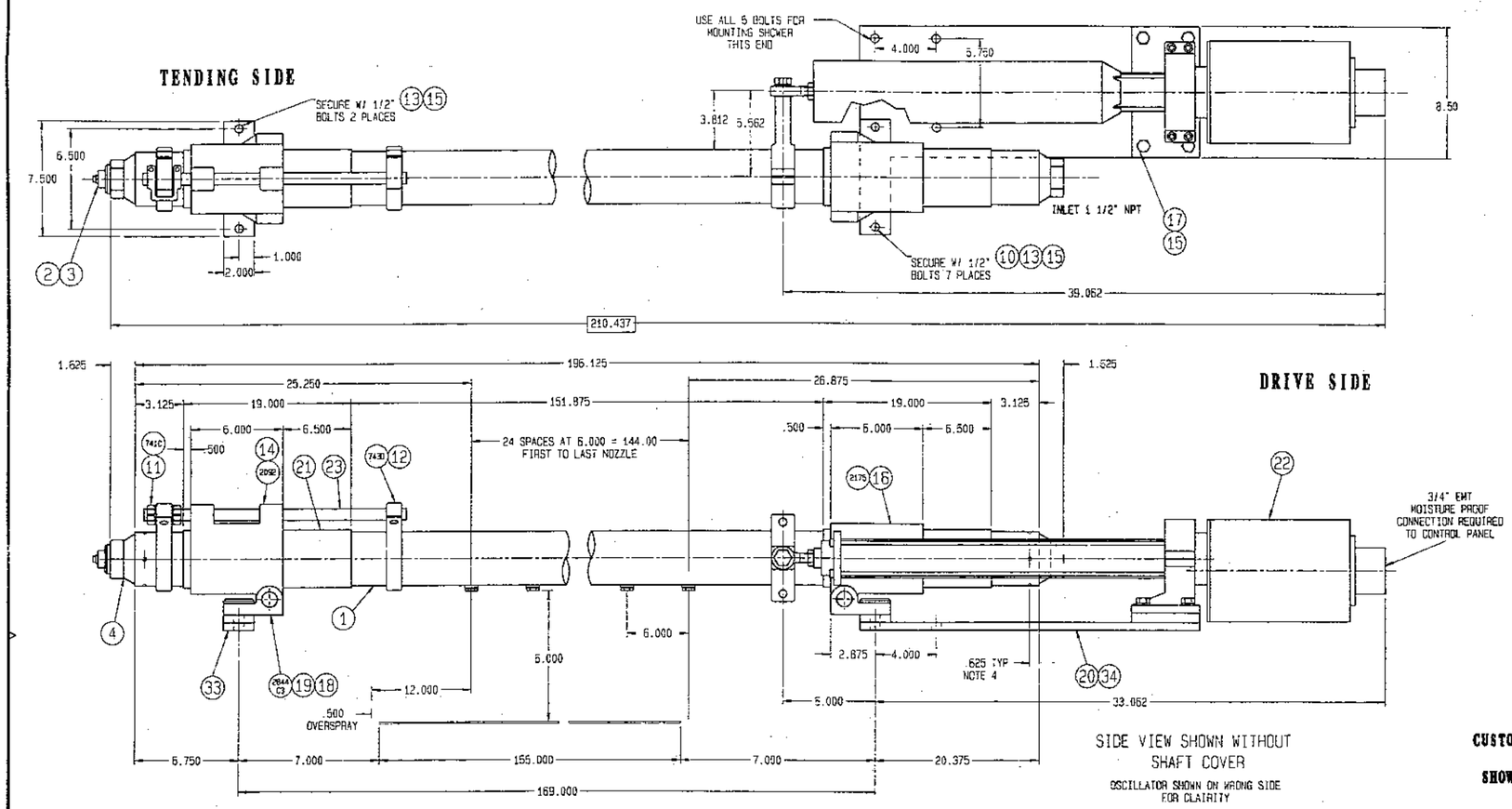

ITEM	QTY	DWG./INV.No.	DESCRIPTION	MATERIAL
1	1		PIPE, 3" SCH CONSISTING OF:	316L SS
			(1) PC. 196.125	
			(1) PC.	
			(1) PC.	
2	1	94B1	PLUG, PIPE 1/4" NPT	
3	1	A-10144	PLUG, PIPE 1-1/2" NPT	
4	2	2168G3	ADAPTOR, PIPE 1-1/2" NPT	
5	1	A-21198	TAG (NOT SHOWN)	
6	25	124N	BASE, NOZZLE	
7	25	123HSGP5	NOZZLE, JET .040" ORIFICE	
8	X	X	X	
9	X	X	X	
10	4	V-221-G1	BOLT, HEX HD. 1/2"-13 X 2.00" LG.	
11	1	2094	CLAMP, CONNECTOR	
12	2	2177	CLAMP, GUIDE YOKE	
13	3	V-221-E1	BOLT, HEX HD. 1/2"-13 X 1.50" LG.	
14	1	2178-A	BEARING, SLICE HOUSING	
15	11	2861L2	WASHER, LOCK 1/2"	
16	1	2178	BEARING, SLICE HOUSING	
17	4	V-221-F1	BOLT, HEX HD. 1/2"-13 X 1.75" LG.	
18	2	2459A	BRACKET, SUPPORT ASSEMBLY	
19	2	2101	PIN, HINGE	
20	1	C-23389	PLATE, MOUNTING	
21	2	21790	SLEEVE, WEAR	
22	1	D-263466P3	OSCILLATOR, EMOIII 12.000" STROKE	
23	1	2095-26	SHAFT, GUIDE	
24	1	A-19281GPSS	HOSE, H.P. 1-1/2"	
25	X	X	X	
26	X	X	X	
27	X	X	X	
28	X	X	X	
29	X	X	X	
30	X	X	X	
31	X	X	X	
32	X	2172C	SPLICE, PIPE (NOT SHOWN)	
33	1	A-23023	SHIM, MOUNTING	
34	1	A-23081	SHIM, EMO, .625"	

CUSTOMER: VALMET SANDY HILL, INC./LYONS FALLS
LOCATION: HUDSON FALLS, NEW YORK/LYONS FALLS, N.Y.
CUSTOMER ORDER NO: 951897
AES ORDER NO: 95104063
SHOWER SERIAL NO: 9514063-02
APPLICATION: TOP PRESS PICK-UP FELT
MACHINE NO: 3

25 NOZZLES (123HSGP5) .040" ORIFICE JET
WILL YIELD 18.7 GPM AT 500 PSI OPERATING
MAX. OPERATING PRESSURE 700 PSI

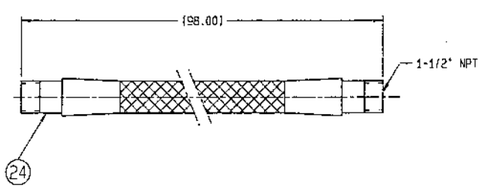

EST. DRY WEIGHT: 191lbs.
EST. OPERATING WEIGHT: 243 lbs.

1. INLET MAY BE LOCATED ON EITHER END OF SHOWER
2. EMOIII PANEL NOT SHOWN.
3. LOCATE TAG AT 12:00 POSITION ON TENDING SIDE OF PIPE.
4. DRILL (4) .250" DIA. HOLES FOR PLUG WELDING H.P. ENDS.
5. SHIP MOUNTING HARDWARE, ITEMS 10, 13, 15 AND 17, LOOSE WITH SHOWER.
6. FOR INSTALLATION AND MAINTENANCE INSTRUCTIONS REFER TO MANUAL.

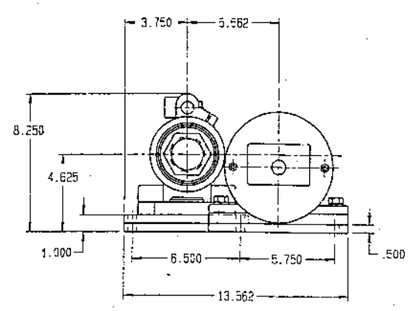

OSC. END VIEW

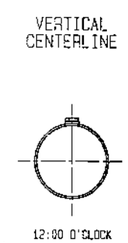

NOZZLE LOCATION AS VIEWED FROM TENDING SIDE

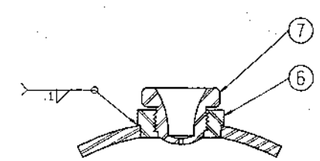

NOZZLE DETAIL

1 ISSUE

REVISION	DESCRIPTION	DATE BY	DATE CHK'D BY	APVD BY

THIS DRAWING IN DESIGN, DETAIL AND INVENTION IS THE PROPERTY OF AES ENGINEERED SYSTEMS AND MAY BE USED SOLELY FOR WORK CONTRACTED, OR BY EXPRESS PERMISSION. ALL RIGHTS OF REPRODUCTION ARE RESERVED.

Engineered Systems
a Thermo Fibertek Company

SHOWER, C-32
OSCILLATING

SH 1 OF 1

DO NOT SCALE THIS DRAWING

BREAK ALL CORNERS TO .015R MAX., UNLESS OTHERWISE SPECIFIED.

9514063-02