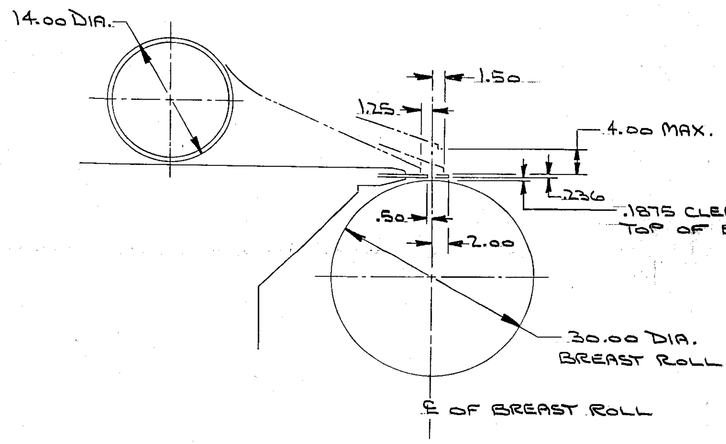

SLICE AREA ADJUSTMENTS

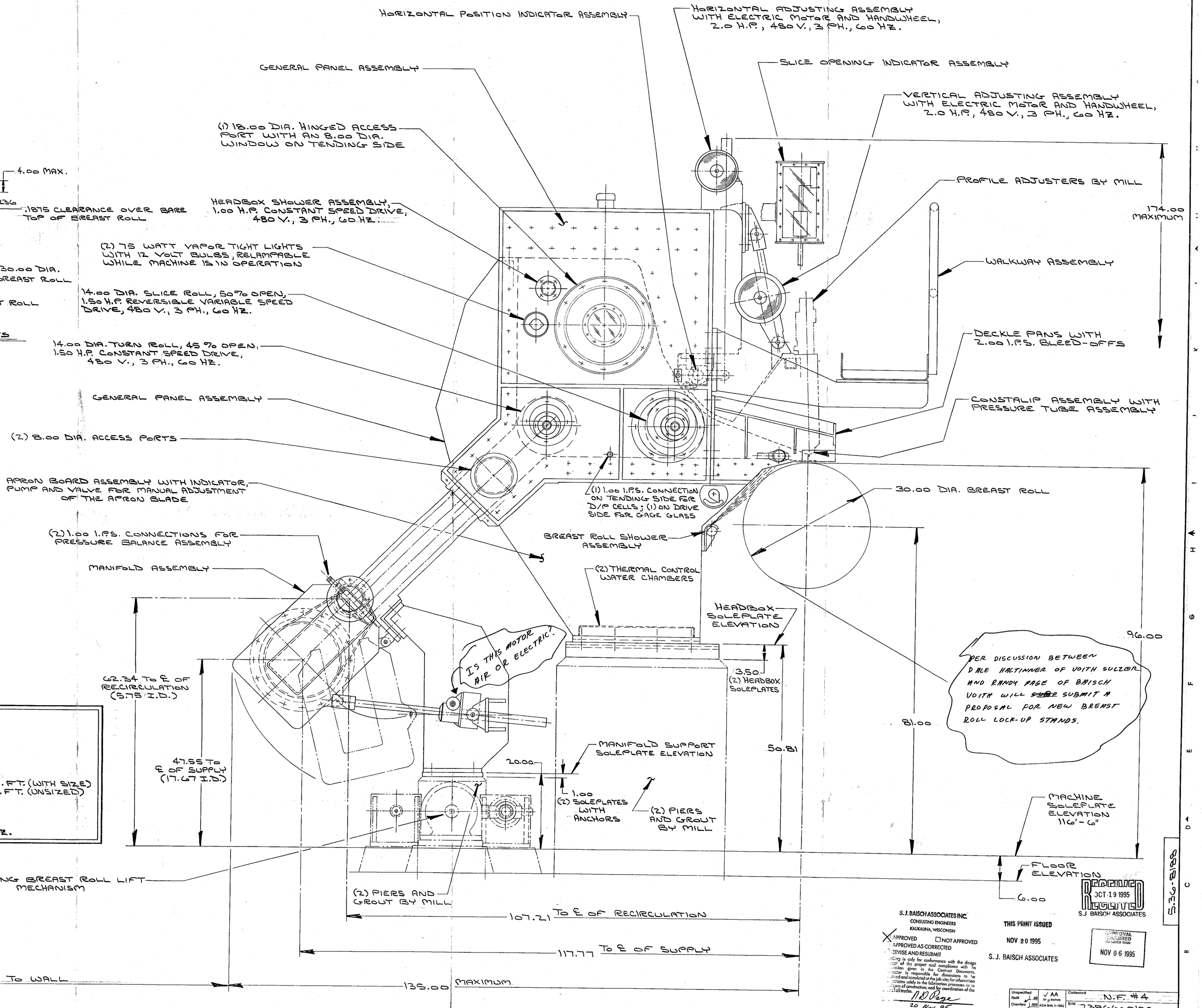

TENDING SIDE VIEW

APPLETON PAPERS, INC.
NEWTON FALLS, NEW YORK
#4 P.M. - L.H.
DECKLE: 160.00 INCHES
VOITH SULZER JOB NO. 239666
CUSTOMER ORDER NO. S000022412
SERIAL NO.
GRADES: COATED FINE PAPERS
BASIS WEIGHT: 45-103 LBS/3300 SQ. FT. (WITH SIZE)
30-88 LBS/3300 SQ. FT. (UNSIZED)
OPERATING SPEED: 1000-2100 F.P.M.
STRUCTURAL SPEED: 2500 F.P.M.
FLOW TO HEADER: 6434-10724 G.P.M.
FLOW TO SLICE: 6000-10000 G.P.M.
ELECTRICAL DATA: 480 V., 3 PH., 60 HZ.

S. J. BAISCH ASSOCIATES INC.
CONSULTING ENGINEERS
KAUKAUNA, WISCONSIN
X APPROVED ☐ NOT APPROVED
APPROVED AS CORRECTED
REVISE AND RESUBMIT
...ing is only for conformance with the design ...ept of the project and compliance with the ...ation given in the Contract Documents. ...tor is responsible for dimensions to be ...med and correlated at the job site; for information ...ains solely to the fabrication processes or to ...ods of construction; and for coordination of the ...all trades.
N.D. Page
20 Nov 95

RECEIVED OCT 19 1995 S.J. BAISCH ASSOCIATES

THIS PRINT ISSUED NOV 20 1995 S. J. BAISCH ASSOCIATES

APPROVAL REQUIRED NO LATER THAN NOV 06 1995

5.36-8188

Unspecified Radii ±.06 Chamfers ±.005	✓ AA In µ inches ASA B46.1-1962	Codeword N.F. #4	
		B/M 239666-0100	
Gen. Tol.-Voith Std. 0.07	Scale of Original — —	Weight:	Lbs.
Projection	Material/Material No.		
	Pattern No., Etc. (Internal Use)	Part No. 16.0100B007	
1995 Date Name		Title INSTALLATION ARRANGEMENT	
DR. 10-10 JLS			
CH. 10-17 JLS			
AP.			
VOITH Voith, Inc., Appleton, WI		Drawing No. 5.36-8188	Size E Sheet of
Ref.:		Sub.	Dept. No.

Rev.	Description	Rev. Symbol	No. of Places	Date	Name	Check