Introduction to Clansman Dynamics Manipulators

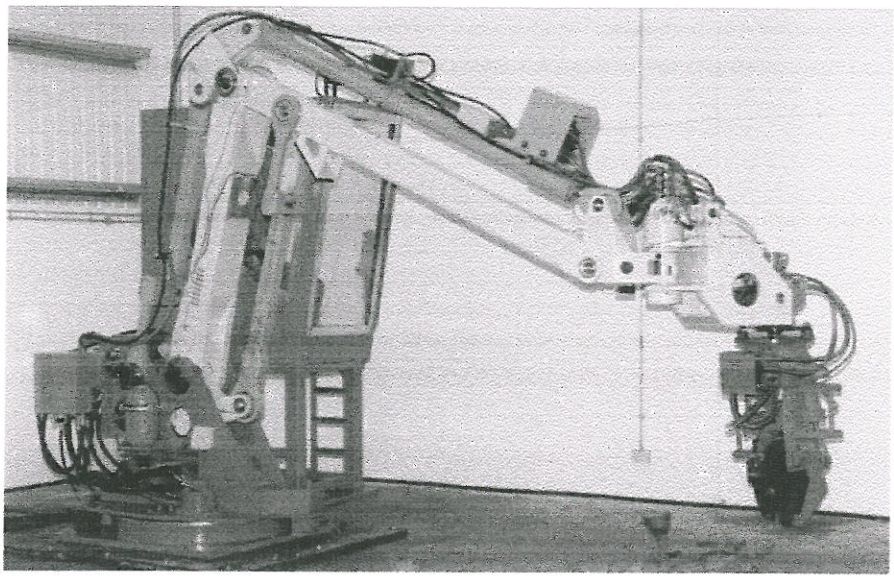

CLANSMAN DYNAMICS manipulators have been designed for safe, long lasting and precise operation in harsh industrial environments. In designing the machines, the design team has concentrated on three main aspects which are:

A structure for the manipulator which has been designed for 40 million typical cycles.

A control system that both gives excellent control as well as providing the basis for the most extensive diagnostic facilities.

Maximum operator comfort which has led to the development of the combined linear and rotary action of the Master Arm with electric (and not hydraulic) Force Feedback.

The design team has been asked at each stage to consider what is simplest, what is most robust and what is most easily maintained. This, for example, leads on the one hand to the provision of common 24mm threaded extraction holes throughout the manipulator and on the other, to the use of identical hydraulic motors on the main rotation, yaw and roll axes. In both examples more economical alternatives were established but rejected because they would have been less easy to maintain.

We would welcome suggestions as to how we may improve our product still further and we wish you many successful years of operation with your CLANSMAN DYNAMICS manipulator.

E C MACHINERY DIRECTIVE

89 / 392 / EEC

DECLARATION OF CONFORMITY

We hereby certify that the machinery stipulated below complies with all the relevant provisions of the EC Machinery Directives and the National Laws and Regulations adopting this Directive.

Machine Description:	Manipulator
Make:	Clansman
Type:	C 3010M
Manufactured by:	Clansman Dynamics Limited 15 Flemington Industrial Park Craigneuk Street MOTHERWELL ML1 2NT Scotland

This machine is in conformity with the provisions of the following other EEC Directives:

89 / 336 / EEC-EMC.

Harmonised standards applied:

EN 292-1, EN 292-2, EN 60204-1, EN 294.

Signed: .....

Dated: 23/12/99

Name: J WALLACE

Position: TECHNICAL DIRECTOR.

being the responsible person appointed by the manufacturer.

Contents

Section 3 SAFETY POINTS

CLANSMAN DYNAMICS manipulators are designed in accordance with current European safety legislation and are equipped with a number of additional features for safe operation which are described elsewhere in this manual but we also draw your attention to the following points:

It is absolutely vital that no personnel other than the manipulator operator be allowed within the working envelope of the manipulator while it is in operation. The working envelope of the manipulator must be considered to be the volume described by the horizontal and vertical movements and the mechanical stops of the rotation (or slew) of the machine, rather than that governed by any electrical controls which could cause aberrant movement under fault conditions.
When service personnel are working on any one of the main axes, the two other main axes must be disabled by taking off the connectors of the appropriate blocking valves.

When a manipulator is put into service it must not be used for production until the mechanical stops have been fitted.

In the cabin of the manipulator, there is a device to detect the presence of the operator (often called the "dead man's handle"). It is not unknown for an operator to cheat the detector so that the manipulator may be kept in a state of readiness to move quickly, even when the operator has left the cabin. **This is a very dangerous practice which must be prevented by management control.**

The hydraulic power pack has an automatic bleed-down valve mounted close to the hydraulic accumulator and the sound of the accumulator discharging may be heard when the pump is switched off. When the sound is heard to stop (this should take less than one minute), the system pressure has reduced to zero and it is safe to work on the hydraulics. This valve is "fail-safe" that is, it has to be energized to **prevent** bleed down.
Before working on the hydraulics, the arms of the machine should be driven as low as possible and as far out as possible, and rested on a safe support to prevent any possible movement of the arms during an intervention on the main vertical and horizontal cylinders.
If a horizontal cylinder is being removed or dismantled, the tooling head must also be chained or otherwise attached to the superstructure of the manipulator to prevent unintended forward movement of the arms when the horizontal cylinder is no longer able to restrain the arms.

If armoured glass is fitted to the front of the cabin, it is extremely heavy and must be carefully supported before removal.

The manipulator should be rested on a safe support whenever it is not being used. It **must not** be left in the air over other equipment since it will gradually come down over a period of time.

Using the Diagnostic system

The diagnostic system is a 64 channel analogue scanner which is used to monitor all the important analogue (or varying) signals inside the control system. In addition it also monitors a few digital signals. The majority of digital signals are monitored in any case using LED's on the Main Control Card so that all push buttons and interlocks can be easily checked.
This means that most faults associated with the control system may be readily found without the need to get the circuit diagrams out or get hold of specialised equipment.

A simplified description of the control system now follows which will help in the understanding of the use of the diagnostic system.

4.1 To get control of the machine

In order to get control of the machine, 5 conditions have to be satisfied.

4.1.1 The Hydraulic Pump has to be running.

If the pump is running, an LED at the top left hand side of the control card will be illuminated. The words beside the LED say "PUMP RUN". You can see the lights at the side of the page here.

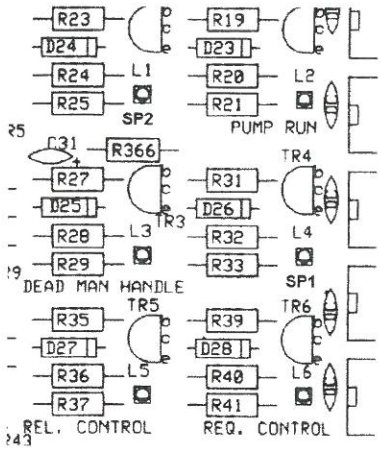

Part of Manipulator Control card

4.1.2 The SP1 and SP2 LED's have to be lit.

These are spare interlocks for the customer to use. These can be wired to safety gates and other safety apparatus. When these circuits are broken the machine will stop immediately.

4.1.3 The "Dead-man's-handle" has to be activated by having the operator's arm on the top of the control arm. This is a safety measure so that if an operator leaves the machine with control on (which would be unsafe) the control system will automatically shut down. This means that when the machine is being operated, the operator must not raise his arm off the control arm or the machine will stop. This is the most common cause of the machine stopping without the operator wanting it to stop.

4.1.4 The "Release Control" lamp must be illuminated. If at any time the operator presses the Release Control button on the operator's panel, the lamp on the card will go out, and the machine will stop moving. If the operator wishes to get out of the cabin, or just wants to make the machine safe for a few minutes, he would press this button. If, however he wants to get control of the machine, this lamp must be illuminated.

4.2 "Control On" sequence.

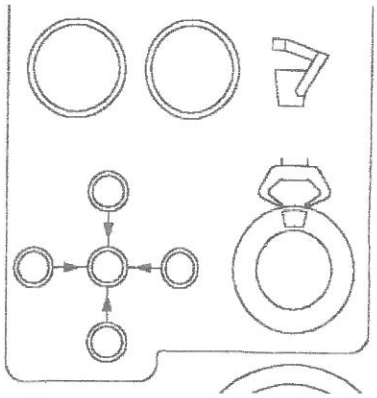

If all 5 lamps are illuminated, meaning that the machine is ready to go, the operator may now press the **"request Control"** push-button on the operator's panel and this will start the sequence which gets control of the machine.

It would clearly be dangerous if it were possible to get control of the machine as soon as the operator pressed the "Request Control" push-button, because the machine would suddenly move at top speed to the position at which the operator was holding the control arm.

To avoid this, the "Control On" sequence logic will not permit control until the control arm is moved into the same position as the manipulator arms.

The way this sequence operates, is that when the operator presses the "Request Control" push-button, the four arrow lamps on the operator's panel come into operation, showing the operator what he has to do to put out the lights. He must first move the horizontal motion of the control arm, either forward or back, depending upon which lamp is illuminated, until the horizontal lamps are out, then he must move the vertical axis until the lamps are out. At that point, he will hear a "CLICK" and he will be aware that he now has control of the machine.

As soon as this happens, he can move the machine in an intuitive way; forward to go forward, back to go back and so on and he can move the tooling around using the small buttons on the control handle.

4.3 Unable to get Control On?

But what is to be done if the operator is unable to get control of the machine? If he cannot get the arrow lights to come on then he has to check the 5 interlocks as described in the paragraph above and he will find that one of the conditions is not met, that is,

The pump is not on, or
There is a power supply fault, or
Dead-mans-handle does not detect an operator's arm., or
Fault on release control circuit , or, |These last two
Fault on Request control circuit . |very unlikely

4.4 Arrow Lamps on, but cannot get Control On?

Another possibility is that the arrow lamps will come on but the operator is unable to make one of them go out.

If this happens, the only likely cause will be the setting or the condition of the potentiometers, or the supply voltage to the potentiometers. The last of these possibilities is the easiest to check so the diagnostic switches should be set to channel 3 to check the +5V supply, and then to channel 4 to check the -5V supply. If these two supplies are OK, then the potentiometers should be checked. (see Section 5.. "Diagnostic Channels- Actual Measured Values"), which describes in detail what voltage should be measured from which potentiometer.
There are two potentiometers associated with the control of the vertical axis, two associated with the horizontal axis, and one with the slew. These are described on the next page.

Note that the potentiometer covers should not be taken off with the power switched on and the potentiometer fixing screws should not be slackened or tightened with the power switched on, because of the possibility of short circuiting the potentiometer terminals. Once the cover is off, and the fixing screws are slackened, then the power may be switched on. This is described more fully later in this document

Please Note

Before describing the use of the diagnostic system, it should be explained that the diagnostic system itself, uses the same power supplies as the manipulator control card. This means that if any of the fuses on the main card or in the terminals, become open circuit for any reason, the diagnostic display may be affected. If the display is ever blank or showing only a 1 in the extreme left hand digit, then the fuses on the card should be checked or failing that, the fuses in the fused terminals or finally that the power supply is giving out the necessary voltages.

There are 2 Horizontal Pots.

P1 which is the horizontal command potentiometer.
It rotates when the control arm is pushed back and forward, and,
P2 which is the horizontal feedback pot, which rotates when the lower link of the manipulator moves back and forward

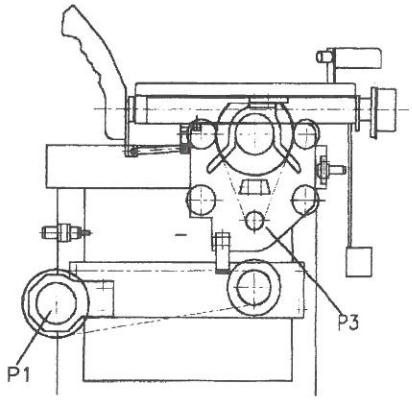

Control arm Potentiometers

There are 2 vertical pots:

P3, which is the command potentiometer, mounted on the control arm and which rotates when the control arm is raised and lowered, and P4, which is the vertical feedback pot which rotates when the main pivot pin of the manipulator rotates, which happens during vertical movements.

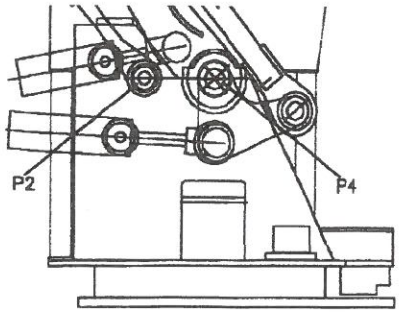

Potentiometers on Manipulator

If any one of these 4 potentiometers is out of alignment then it will be impossible to get through the "control on sequence". To find out where the problem is, the diagnostic system must be used.

Please refer now to Section 5.. "Diagnostic Channels-Actual Measured values".
To use the diagnostic Channels, you must turn the small switches at the bottom left-hand side of the manipulator control card (it is easiest if you use a screwdriver)
If you want for example to check channel number 8, you would turn the left hand switch until the number 0 appears at the top of the switch beside the white line.
Then and you would turn the right hand switch until the number 8 appears at the top beside the white line. This means that channel 08 is selected. This particular example would display the voltage from Potentiometer 3, on the liquid crystal display.

To continue with the example above where it is not possible to get through the "control on" sequence, we should check the channels for the potentiometers associated with the faulty axis So if, for example, the bottom vertical arrow lamp will not go out, we must check that the two vertical pots, P3 and P4, are giving the correct signal.
From the data given in the "Diagnostic Channels Actual Measured Values, we can see that potentiometer 3 (Channel 8) should give out a voltage of: -4.25V when it is fully up, and +4.25V when it is fully down, and of course the voltage should vary linearly between these two voltages as the handle is being moved slowly up and down.

Similarly, potentiometer 4 (Channel 9 .. vertical feedback potentiometer) should be checked, if the machine is in a moving condition. It should read a much smaller voltage since the

rotation of this pot is only around 90 degrees, so the measured values should be approximately + 1.50 volts in the fully up position, and approximately -0.85 Volts in the fully down position.

If any significant variation from these figures is seen, a little thought should point us in the direction of the problem. For example, if channel 9 (i.e. pot 4) measures +2.4V to +0.05V then the **amount** of signal is correct (i.e. a total of 1.50 + 0.85 = 2.35V) **BUT** clearly the pot has developed an offset, possibly having a coupling which has come loose or the main pivot pin is no longer firmly fixed to the main crank which is pushed by the vertical cylinder. If this should happen it is not sufficient to turn the potentiometer body until the voltage is correct, it is vital that the mechanical cause of the movement is found, or the problem will come back.

If, on the other hand, the pot gives a voltage which does not vary smoothly over the whole range of its movement, then the pot itself must be faulty. When replacing a pot, the pot should be fitted in place, then rotated to give the correct voltage out according to the "Diagnostic Channels" data. Which appears later in this document.
When fitting new pots to the manipulator (not the control handle) you may have to estimate the correct voltage at first, since you cannot at first move the manipulator. As soon as you are able to get control of the manipulator, you should repeat the diagnostic check, and set the potentiometer to the correct voltage, once the machine is able to move. To estimate the voltage to set, a simple calculation is possible:

For Example.. If it is necessary to replace Potentiometer 4 (sometimes called "Pot 4" or "P4"), then when it is replaced, look at the machine from a distance away and estimate how far up it is. For the sake of having a sample calculation, let us say that the machine is one quarter of the way up (or three quarters of the way down)
The diagnostic data tells us that the voltage from pot. 4 should be (in this example), -0.84 volts when the machine is as low as it can go, and it should be +1.49V when the machine is as high as it can go. This is a difference of 2.33 volts. So if the machine is a quarter of the way up, the voltage should be 0.25 X 2.33V above the base value of -0.84.
This is -0.84 + (0.25 X 2.33) V = -0.26V
If we think of it as threequarters down, the calculation still gives the same result:
+1.49 - (0.75 X 2.33) V = -0.26V

You can do the same calculation on the horizontal axis if you should ever have to replace Pot 2 (The horizontal feedback pot.) which is attached to the rear link.

To replace or just check the potentiometers on the Control arm is of course much easier since the control arm can be moved at any time. You would simply replace the pot. (for example pot. 1) and then dial up channel 06 on the Manipulator control card and watch the voltage as you rotate the pot. In this case, you could move the control arm **fully** forward, (including the stroke of the buffer) and then rotate the potentiometer body (since the potentiometer shaft cannot easily be turned), until the display shows +3.30V. You could just as easily, push the control arm fully back (right into the buffer) and then adjust the potentiometer body, until the diagnostic display reads - 3.30V.

Caution:
There are two points to watch if you have to change a potentiometer.

1 Do not take off a potentiometer cover with the power switched on, because of the possibility of short-circuit of the potentiometer terminals as the cover is being moved. Do it this way:

1.1 Switch off power
1.2 Take cover off and let it hang.
1.3 Slacken the 3 retaining bolts which hold the pot body
1.4 Switch power on.
1.5 Make your adjustments
1.6 Switch power off
1.7 Tighten retaining bolts
1.8 Put cover back on
1.9 Put power back on and double check everything is as you intended.

2 When replacing either pot 2 or pot 4, it is perfectly acceptable to do the estimate of the position of the main vertical or horizontal axes, to get the machine moving again, but as soon as the machine is going again, it is vital that you accurately set the pot which you have changed, so that the pot gives the voltages which are shown in the diagnostic readings. If you fail to do this, then you will find that when the manipulator is stopped at its extremes of travel, **it may not be possible to get the "arrow lamps" to extinguish**, in order to get "Control On" . For these arrow lamps to go out at all extremes of travel, the potentiometers **must** be correctly set.

There now follows in Section 5, a full list of all the diagnostic channels with data which gives the recorded voltages and currents measured on each channel during when the machine was built and tested.

Section 5

Diagnostic Channels - (Actual Measured values)

00 **24v Supply** (actually set at 26v) - note that this is divided exactly by two before being displayed, because the display reads only 19.99 maximum. This channel should read between +12.5v and +13.5v.

01 **+15v Supply** This is the main, positive analogue supply and should be between +14.6v and +15.4v ~~+7.44~~

02 **-15v Supply** This is the main negative analogue supply and should be in the range -14.6v to -15.4v ~~-6.88~~

03 **+5v Analogue reference** This is derived from the +15v, using an LM317T regulator on the heatsink plate. It is used (along with the -5v signal, below) as the excitation voltage for all the servo potentiometers, and the Pressure Reducing valve potentiometer. The allowable range for this 5V supply, is +4.9V to +5.1V

04 **-5v Analogue reference** This is derived from the -15v analogue supply using an LM337T regulator on the heatsink plate. It is used along with the +5v (above) as the reference voltage for the servo potentiometers. Allowable range is -4.9V to -5.1V

05 **+5v Digital Supply** This is derived from the +15v main analogue supply using an LM317T regulator on the heatsink plate. It is quite separate from the +5v analogue reference to reduce the possibilities of noise transmission. Allowable range is +4.9 to +5.1V

06 **Potentiometer 1 (Horizontal Reference Potentiometer)** This is the horizontal command signal from the control arm. When the control arm is fully forward, this should read approx. +3.30v and when control arm is fully back it should read approx. -3.30v. ("Fully" meaning hard into the stops.) Allowable deviation is 0.1V

07 **Potentiometer 2 (Horizontal Feedback Potentiometer)** This is the horizontal feedback signal from the horizontal cylinder via the rear link (which is parallel to the lower boom). It should read -1.10v when the lower arm (and thus horizontal cylinder) are fully forward, and +1.10v when the lower arm (and horizontal cylinder) are fully back. Allowable deviation is 0.1V.

08 **Potentiometer 3 (Vertical Reference Potentiometer)** This is the vertical command signal from the control arm. In its mid position (which is not necessarily horizontal), it should read 0.0v. When fully up, it should read approx. -4.4v and when fully down it should read approx. +4.4v. Allowable deviation is 0.1V

09 **Potentiometer 4 (Vertical Feedback Potentiometer)** This is the vertical feedback signal from the vertical cylinder via the main crank. When the vertical cylinder is fully extended, and thus the upper arm is fully up, this channel should read approx. +1.40v. When the upper arm is fully down, this channel should read approx. -1.00v. Allowable deviation is 0.1V

10 **Potentiometer 5 (Slew Potentiometer)** This is the command potentiometer for the slew axis. When the handle is in its "relaxed" position (i.e. slightly left of centre), this channel should read 0.0v. When pushed fully left, it should read + 0.80V and when pushed fully to the right, it should read -0.80V, (both +/- 0.1V)

11 **Ramp Output.** This is the output from the slew ramp and it is an amplified, shaped, and ramped version of channel 10. (Left = +10.0v, right = -10.0v., both +/- 1V)

12 **Slew Changeover voltage.** This is the voltage at which the slew changes over from left to right and vice-versa. It is factory set at approx. -0.23v, and should not need to be re-adjusted.

13 **Slew Servo Valve Current**. This is the current to the slew servo valve. The maximum possible is 50mA (which gives maximum velocity but may differ from one application to the next. This channel is not used on the C3010 machine.

14 **Slew Servo Valve Voltage Output**. This is the voltage output to the slew servo valve. (When a voltage driven valve is used). This will be in the range of 0 to +/- 10V max. These valves are only used on C3010 and C4010 machines.
Note that these 2 types of servo valve are mutually exclusive - if you have a current valve you do not have a voltage valve, and vice-versa.
Note also that the voltage on channel 14 always exists whatever valve you have, but the current reading on channel 13 only exists if a current valve is fitted, and is actually plugged in.

15 **Slew Servo valve Spool feedback.** This is a spool feedback signal from a voltage driven servo valve. (on the slew). It only exists if a voltage driven servo valve is fitted and plugged in. It should read the same voltage as channel 14, when a voltage valve is fitted. If it reads a substantially different voltage, then there is a possibility that the valve is contaminated.

16 **Vertical Proportional Term.** This is the error voltage from the vertical position loop. It is a useful indicator during commissioning or fault finding, that the control loop is operating correctly. It should read approx. +13.0v, depending on the position of the control arm, <u>and</u> the main machine. This voltage should pass through Zero when the control arm and the main booms are in alignment.

17 **Vertical Derivative Term.** This is a signal used in the control loop to aid stability. A signal will be present when the vertical cylinder is accelerating or decelerating.

18 **Vertical Percentage Derivative Term.** This is the amount of Derivative Term which is input to the loop. It is normally a small amount (less than 1v maximum) and may be set to zero.

19 **Vertical Shaped Output.** This is the output from the shaping circuit which follows the vertical loop.

20 **Vertical Ramp Output.** This is the vertical error signal after the ramp and is approximately ±10.6v, depending on the position of the control arm, and the machine arms. This voltage should drop to zero as the control arm and the main booms are aligned.

21 **Vertical Arrow Threshold**. This is the "window" of error voltage in which it is possible to gain control of the manipulator. It should be approx. 0.87v.

22 **Vertical Arrow Threshold** This is the other side of the "window" (channel 21) and should be approx. -0.88v.

23 **Vertical Servo Current.** This is the current signal (approx. ± 50mA) which drives the vertical servo valve. It should pass through zero(mA) when the control arm and the upper arm are in alignment. This channel is not used on the C3010 and C4010.

24 **Vertical Servo Valve Voltage Output**. This is the voltage output to the slew servo valve. (When a voltage driven valve is used). This will be in the range of 0 to +/- 10V max. These valves are only used on C3010 and C4010 machines.
Note that these 2 types of servo valve are mutually exclusive - if you have a current valve you do not have a voltage valve, and vice-versa.
Note also that the voltage on channel 24 always exists whatever valve you have, but the current reading on channel 23 only exists if a current valve is fitted, and is actually plugged in.

25 **Vertical Servo Valve Voltage Feedback.** This signal only exists if a voltage-driven servo valve is being used (e.g. MOOG D661). It is a feedback signal proportional to the command signal to the valve. i.e. if this type of valve is used, channels 24 and 25 should read the same voltage within ±10%.

26 **Vertical Linear Correction Signal.** This is a signal which is proportional to modulous of horizontal displacement from center position. It is used to "lift" the vertical axis as the horizontal axis moves away from center, to avoid a curved trajectory. It should vary from 0 at horizontal center, to -0.34v at extremes of travel.

27 **Pressure Reducing Bottom.** This is the lower reference voltage for the pressure reducing circuitry. The setting of this signal determines the lowest value of gripper force which can be selected. It should be approximately -1V

28 **Pressure Reducing Current.** This is the current which goes to the gripper pressure reducing valve. Maximum current = maximum pressure. Normal settings are 50 - 700 mA.

29 **Pressure Reducing Potentiometer Signal.** This is the analogue signal in the range of -1 to -5v, which sets the reference for the pressure reduction circuitry.

30 **Manipulator Under Control.**

31 **Power Supply Operating.**

32 **Horizontal Proportional Term.** This is the error voltage from the horizontal position loop. It is a useful indicator during commissioning or fault finding, that the control loop is operating correctly. It should read approx. +13.0v, depending on the position of the control arm, and the main machine. This voltage should pass through Zero when the control arm and the main booms are in alignment.

33 **Horizontal Derivative Term.** This is a signal used in the control loop to aid stability. A signal will be present when the horizontal cylinder is accelerating or decelerating.

34 **Percentage Horizontal Derivative Term.** This is the amount of Derivative Term which is input to the loop. It is normally a small amount (less than 1v maximum).

35 **Horizontal Servo Shaped Output.** This is the output from the shaping circuit which follows the horizontal loop.

36 **Horizontal Ramp Output.** This is the horizontal error signal after the ramp and is approximately +10.6v, depending on the position of the control arm, and the machine arms. This voltage should drop to zero as the control arm and the main booms are aligned.

37 **Horizontal Arrow Threshold** (positive). This is the "window" of error voltage in which it is possible to gain control of the manipulator. It should be approx. +0.87v

38 **Horizontal Arrow Threshold** (negative). This is the other side of the "window" (channel 37) and should be approx. 0.88v - 0.89v

39 **Horizontal Servo Current.** This is the current signal (approx. + 50mA) which drives the horizontal servo valve. It should pass through zero(mA) when the control arm and the upper arm are in alignment. This channel is not used on the C3010 and the C4010.

40 **Horizontal Servo Valve Voltage Output**. This is the voltage output to the horizontal servo valve. (When a voltage driven valve is used). This will be in the range of 0 to +/- 10V max. These valves are only used on C3010 and C4010 machines.

Note that these 2 types of servo valve are mutually exclusive - if you have a current valve you do not have a voltage valve, and vice-versa. Note also that the voltage on channel 40 always exists whatever valve you have, but the current reading on channel 39 only exists if a current valve is fitted, and is actually plugged in.

41 **Horizontal Servo Valve Voltage Feedback.** This signal only exists if a voltage-driven servo valve is being used (e.g. MOOG D661). It is a feedback signal of spool position which should be proportional to the command signal to the valve. i.e. if this type of valve is used, channels 40 and 41 should read the same voltage within ±10%.

42 **Horizontal Forward Limit Level.** This is the voltage at which the Forward Horizontal Limit will operate (-0.71V). When the horizontal feedback potentiometer reaches this value, the servo current will drop to 25% of its normal value. However, the horizontal axis will operate at full speed while coming out of limit.

43 **Horizontal Backward Limit Level.** Same function as channel 42 but operating at a different voltage, +0.63v.

44 **"Slew enable" signal.** This signal will be a logic "1" (i.e. approx. 3.5 - 4.0v) when the slew is not in limit, and will be a logic "0" (0.05 - 0.20v) when slew is disabled, because it is in limit.

45 **Slew Full Speed.** This will be a logic "1" when slew is allowed to move at full speed, i.e. not in the area covered by a "slowdown " detector. Note that the slew is driven out of a slowdown area at normal speed.

46 **"Down" arrow lamp.** This is the signal which drives the "down" arrow LED on the operator's panel. All four arrow lamp signals are asserted only when control is not on, where "0" = asserted.

47 **"Up" arrow lamp.** This is the signal which drives the "up" arrow LED on the operator's panel. All four arrow lamp signals are asserted only when control is not on, where "0" = asserted.

48 **"Forward" arrow lamp.** This is the signal which drives the "forward" arrow LED on the operator's panel. All four arrow lamp signals are asserted only when control is not on, where "0" = asserted.

49 **"Backward" arrow lamp**. This is the signal which drives the "backward" arrow LED on the operator's panel. All four arrow lamp signals are asserted only when control is not on, where "0" = asserted.

50 **"Pump Run"** signal. This is at a logical "1" when the hydraulic pump motor contactor is energized.

51 **Auxiliary Interlock "SP2"** signal. This is at a logical "1" when the interlock circuit is energized.

52 **"Dead Man's Handle"** ("DMH"). This is at a logical "1" when the detector is able to detect the pressure of an operator's arm on the control arm. "1" = pressure.

53 **Auxiliary Interlock "SP1"** signal. This is at a logical "1" when the interlock circuit is energized.

54 **Release Control.** This is at a logic "0" for release and a logic "1" for normal operation of the manipulator.

55 **Request Control.** This is at a logic "1" when the operator presses the "request control" push-button.

56 **Left Slowdown.** This channel gives the status of the left slew slowdown. A logic "0" indicates that the slowdown area has been entered.

57 **Left Limit.** A logic "0" indicates that the left stop area has been reached.

58 **Right Slowdown.** This channel gives the status of the right slew slowdown. A logic "0" indicates that the slowdown area has been entered.

59 **Right Limit.** A logic "0" indicates that the right stop area has been reached.

60 **"Go Left" signal.** This becomes a logic "1" when the control handle is pushed to the left.

61 **"Go Right" signal.** This becomes a logic "1" when the control handle is pushed to the right..

62 **Horizontal Force Limitation** pot setting for the forward position. This should be set to -0.2V.

63 **Horizontal Force Limitation** pot setting for the backward position. This should be set to +0.2V.

Section 5.2
Potentiometer settings, manipulator control card

NB. In channel number column:
X(Y) = current operated servo valves (voltage operated valves)

Pot	Function	Setting (%)	See Ch. no.
RV1	Horizontal Limit (rear)	0.55V	43
RV2	Horizontal Limit (front)	-0.45V	42
RV3	Slew slow speed	100	13(14)
RV4	Slew acceleration	35	13(14)
RV5	Voltage output to slew servo valve	60	14
RV6	Slew changeover point	60	-
RV7	Calibration of diagnostics		-
RV8	Current to slew servo valve	50	13
RV9	Vertical Gain	70	-
RV10	Voltage output to vertical servo valve	100	24
RV11	not used		-
RV12	not used		-
RV13	Vertical derivative term (in %)	35	-
RV14	Vertical acceleration	50	23(24)
RV15	Current to vertical servo valve	60	23
RV16	not used		-
RV17	Trigger point, forward force reduction	-0.2V	62
RV18	Vertical correction (in %)	50	26
RV19	Horizontal gain	45	-
RV20	not used		-
RV21	not used		-
RV22	Horizontal derivative term (in %)	40	-
RV23	Horizontal acceleration	75	39(40)
RV24	Current to horizontal servo valve	60	39
RV25	Voltage to horizontal servo valve	100	40
RV26	not used		-
RV27	Gripper pressure reducing valve, scaling	75	28
RV28	Gripper pressure reducing valve, minimum value	60	28
RV29	Oscillator (100% = zero osc)	100	-
RV30	Oscillator frequency	100	-
RV31	Trigger point, backward force reduction	+0.2V	63
RV32	Diagnostic scaling		-
RV33	Diagnostics, null adjustment		-

view of potentiometer

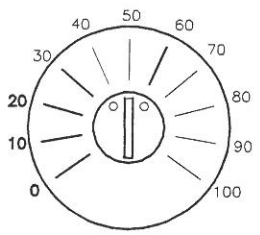

Section 5.3

Potentiometer Positions, manipulator control card

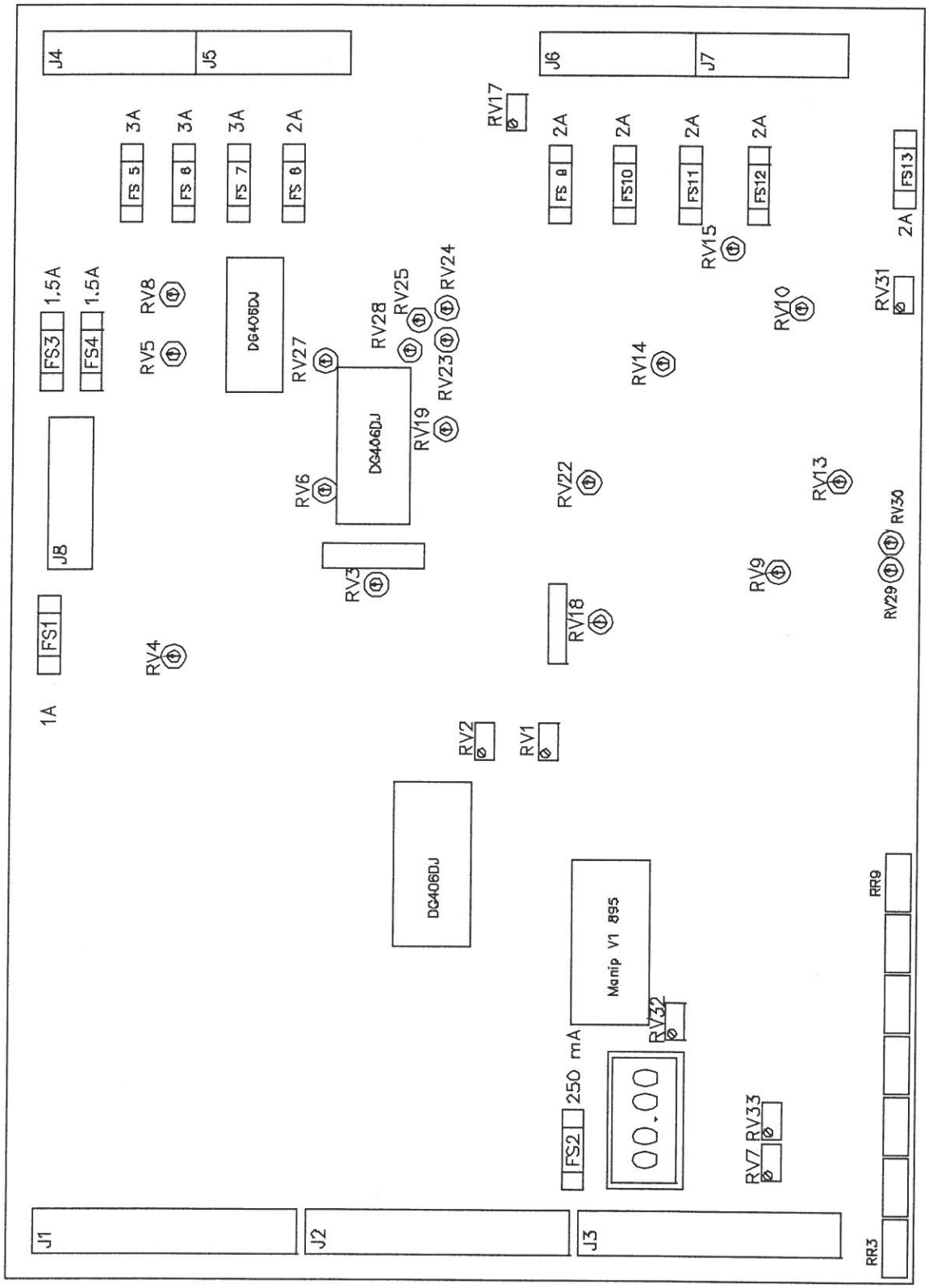

Section 5.4

Potentiometer settings; Version 4, amplifier card

Pot	Function	Setting (%)
RV1	Scaling of vertical force	40%
RV2	Vertical balance	50%
RV3	Scaling of horizontal force	55%
RV4	Horizontal balance	50%

view of potentiometers

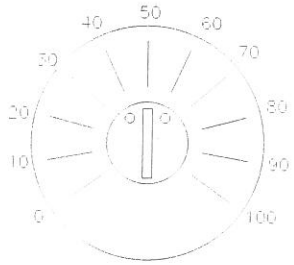

Section 5.5

Potentiometer Positions, manipulator amplifier card

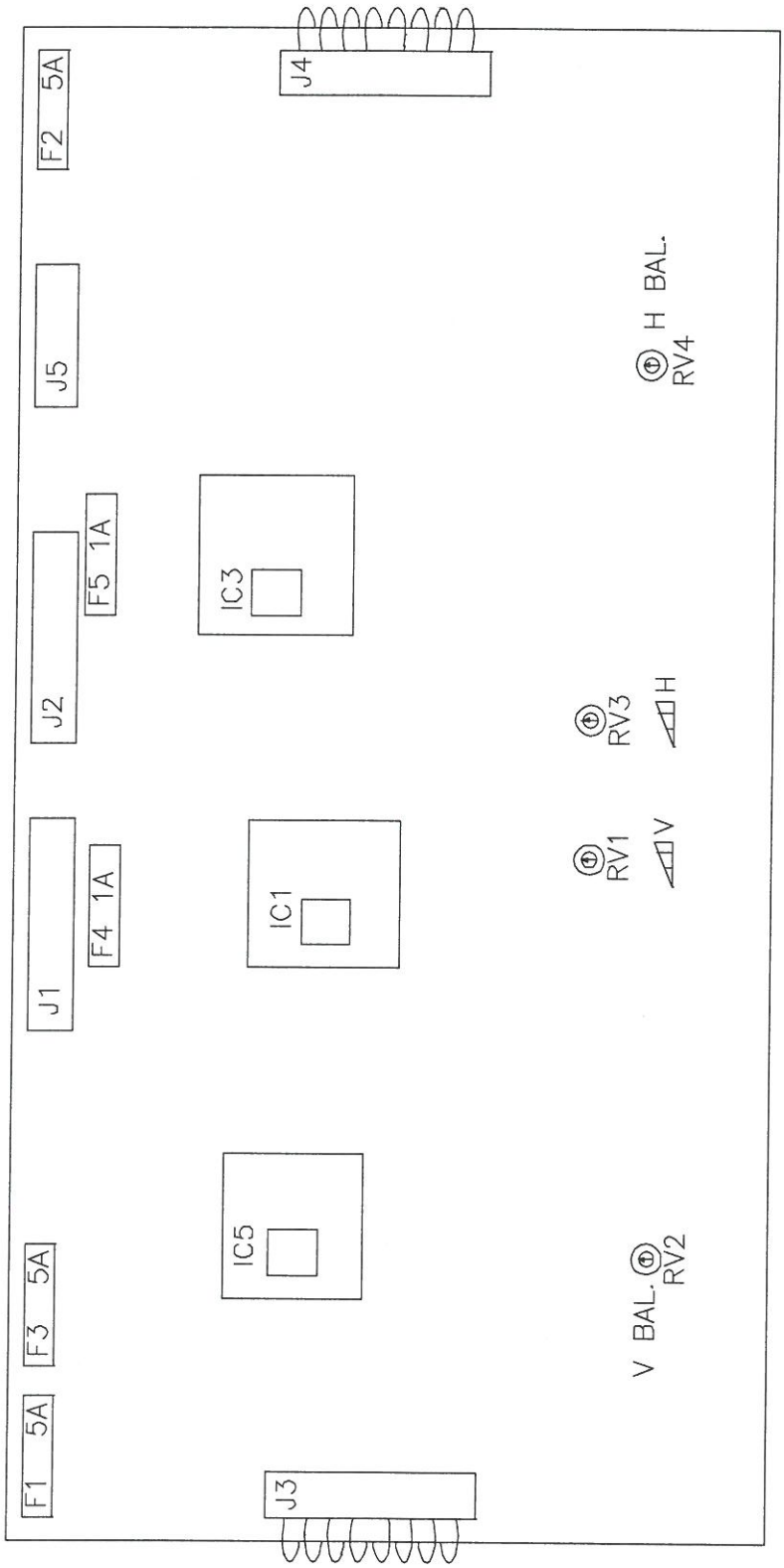

Section 6

Routine Maintenance Procedures
Clansman Dynamics manipulators

6.1 Lubrication:

6.1.1
The Clansman Manipulator must be lubricated in the recommended way. The location of the greasing points, the required frequency of lubrication and the type of lubricant for each point of lubrication, can be found in later in this section of the instruction manual.

6.1.2
Some care is required to ensure that the lubrication of the gripper lub. points is correctly done, without so much grease being ejected as to be a nuisance or a fire hazard.

6.1.3
When a manipulator is equipped with automatic greasing, it is important to check daily that the reservoir is filled and that the pump is operating as required. The recommended operating periods for an automatic pump is: 1 minute per 14 hours. The operator must inform the maintenance department if the "grease blockage" light is illuminated.

6.1.4
On grouped systems, the hoses should be regularly checked for damage and the various points should be checked so that the grease is known to be reaching the bearings.

6.1.5
The same is true of automatic systems. There are tell-tale indicators on the primary block which indicate when there is a blockage to a secondary block. There is also a pressure switch fitted to the system which informs the operator if there is blockage anywhere in the system.

If for any reason, a hose gets damaged, the ends are re-usable and a new hose can easily be fitted If the hose is on a moving part, then the manipulator should be moved to its fullest extent to make sure the hose is long enough.

6.1.6
Greasing the slew ring: The slew ring bearings are greased by removing the access hole covers and slewing the manipulator until the nipples, in turn, become visible, (4 in total). The gear teeth must be lubricated monthly using a high quality spray-on lubricant such as "Rocol Tuffgear Spray" or direct equivalent.

6.1.7
Note that the regular lubrication of the manipulator has a double purpose; to lubricate of course but also to flush out any dust or contamination which may have entered the area.

6.2 Hydraulics:

6.2.1

Apart from the most obvious points such as checking the fluid level and ensuring that the temperature does not get too high, there are several tasks which need to be regularly carried out.

Clansman strongly recommend that an oil sample is taken and analysed once a year. If at any point, the fluid shows an unacceptable level of contamination, then the cause must quickly be found. Even if the oil is about to be changed, to have a sample analysed before the oil is changed, will give a good indicator of the general health of the hydraulics.

6.2.2

The return line filter should be changed two times per year. If the filter is found to contain a large number of visible particles (especially bright particles), then the cause should be investigated.

Remember that the return line filter is the main collector of particles, since it has a 5 micron mesh as opposed to the 10 micron mesh of the pressure filter.

The pressure filter should be changed every year.

The air breather filter should be changed every 3 months where the manipulator is in a foundry, or more frequently where dust levels are high.

Note that the pressure and return line filters both have an electrical switch which gives an indication of filter blockage. An occasional "blink" of this light is acceptable, but long periods of non-illumination indicate that the filter is becoming blocked. The replacement of filters as mentioned above, should be carried out even if no indication of blockage is given.

6.2.3

Only ISO 46 oils should be used. Although the supplier is not particularly important, the oil should be premium oil with the appropriate anti-rust, anti-wear and anti-foam additives. In theory, less viscous fluids may be used but the manufacturers of the motors say that the maximum service life will be obtained by using ISO 46 mineral oil.

To maintain the quality of the hydraulic fluid it should be changed every year. This is nothing to do with cleanliness, but because the additives put into the fluid when new, gradually lose their effectiveness.

When the oil is changed, it is vital to loop the hoses at the manipulator, before the manifold, and to circulate (or flush) the fluid for around 4 hours before use.

NEW OIL CANNOT BE CONSIDERED TO BE CLEAN ENOUGH.

6.2.4

These machines are capable of running on water-glycol based fluids and other synthetic fluids, but the service life of some components, including the motors, can be reduced to around 10% of the life achieved with mineral oil. Many customers with a fire-hazard problem may find this a price well worth paying but for most people, it is to be avoided. In any case, the fluid should not be changed without

recourse to Clansman to find out if all the component seals are capable of operating with the fluid proposed.

6.2.5
Cooling of hydraulic units:
Air-cooled units are largely foolproof but if overheating occurs look for:

Heat in the bypass check valve, indicating a bypass flow where there should be none.

Thermostat not correctly set or not working.

Matrix of cooler blocked by dust.

Ambient temperature greater than the design temperature.

Manipulator allowed to sit without operating for hours. Note that the very hot oil from the pump casing drain is not separately cooled, and can inject a lot of heat into the oil. When a machine with standard return-line cooling is left with the pump switched on, but the manipulator not in use, then no cooling is taking place, and it is possible for the oil temperature to rise considerably.

Water cooled units are very effective, but again there are a few points to watch:

As with air-cooled return flow units, it is possible for a unit to overheat if it is allowed to idle for too long without moving (see above).

It is vital that the cooling water enters the BOTTOM of the cooler and the used water exits from the TOP.

The water filter should be checked if it is suspected that there is insufficient water flow. This is especially important with a new installation.

To check if there is sufficient water flow, measure the temperature of the ingoing water and the outgoing water. The difference should be around 5 degrees.
It is tempting to think that if the ingoing water is cool and the outgoing water is hot, then the cooler must be working well. This is not so. If the water is being heated by more than approx 7 degrees, then the water flow is not sufficient. To have a good supply pressure of about 2-3 bar is necessary of course, but it is also vital that the outgoing drain flow is unrestricted.

If the water pipes on both sides of the cooler feel hot, then there is no flow, and the supply pressure, filter, control valve and thermostat should all be checked.

As with the aircooled unit, there is a pressurised bypass, which should not pass fluid under normal conditions, and thus should not be as hot as the return line oil.

6.2.6 When the hydraulic fluid is kept in good condition, servo valves normally have a long and reliable life achieving many years of use.
In contaminated systems, the life and reliability of servo valves is greatly reduced.

To check the servo valves, use the following procedure:
Where the larger feedback type valves are used (eg D641 or D661), using the diagnostic system, look at the spool feedback signal which should at all times be similar to the voltage which the control system outputs to the servo valve, (within say 10%).
A contaminated valve is characterised by the spool feedback not following the reference signal.
An Example: Move manipulator to its centre position then turn control off, but keep the pump running. Select channel 40 (voltage signal to horizontal servo valve). As the control arm is moved forward and back, the signal will change amplitude and direction. Now select channel 41. This is the signal back from the servo valve, indicating the spool position. The 2 signals should be approximately the same (say within +/-10%).

With the smaller and simpler valves (Ultra type, without spool feedback) look for speeds which are different in the 2 directions, a zero point which changes all the time, and a "jerky" feel in the control system.

If any such symptoms are suspected, don't change all the valves right away but have an oil sample analysed first, then if or when the fluid quality is adequate, change one valve at a time to see if the fault is cured.

The hydraulic fluid cleanliness to be to normal servo standard, ie NAS 6

If the hydraulic fluid is badly contaminated, phone Clansman for advice.

6.2.7 Temperature:
The fluid temperature when operating should be in the range 30 – 60 °C.
It is safe to use the manipulator at temperatures down to 10 °C , but the performance will be reduced until the temperature rises above around 30 °C .
There is a danger of cavitation if the machine is used below about 10 °C, therefore Clansman recommend that in winter, the machine is left with the hydraulic unit stopped, but the power left connected to the motor starter panel on the hydraulic power pack, in order to keep the tank heater active. This tank heater only operates if the temperature of the fluid drops below about 25 °C.

The safety trip is set to about 60 °C and the other sensor which controls the cooler, is set to around 40 °C.

6.2.8 Flexibles:

All hoses should be carefully examined, not less than monthly for wear due to possible abrasion caused by rubbing together on against adjacent steelwork.
Even slightly worn hoses should be replaced.
If a new hose **is** to be fitted, it must be thoroughly cleaned, for preference using the hydraulic unit, while disconnected from the manipulator, as the flushing device.

6.2.9 Hydraulics in general:

The machine should be regularly inspected for leaks in all the hydraulic equipment. Leaks in hoses are obvious and will quickly be noticed, but the swivel couplings in the base should be regularly cleaned and checked for leaks.
If the beginnings of a leak are visible, the coupling should be changed at the first convenient break. This may well prevent an unplanned production stop.

Again it should be emphasised that the base must be regularly cleaned inside to prevent any possibility of damage to the cable-carrying, glass-reinforced nylon conduit.

If at any point, a cylinder is changed, then the cylinder cushions must be set before the machine is used again.
These can vary from one cylinder to another, but a good starting point is to screw the cushion adjuster fully in, and then unscrew it one eighth of a turn. If it requires further adjustment, it will not be much.

If any work is done on the Poclain motors (hydrabases), it is vital that every bolt which has been disturbed, is torqued up to the correct level when it is replaced. Failure to do this may cause the motor to leak between sections.

Cylinder manufacturers often give details of cylinder maintenance. Where Clansman have this information it will be contained in the manual for the end-user's eventual use if required.

6.3 Electrics:

The electrical system does not requires periodic maintenance and the electrical components in general have an infinite life (in theory), but there are a few electro-mechanical points to watch:

6.3.1
Potentiometers are electro-mechanical devices with a moving finger which gently moves over a conductive track to give the necessary feedback signal to the control system. They have theoretically a very long life but they CAN wear out. They are also adversely affected by ingress of grease, if any grease reaches the bearing. It is advisable to remove the 2 external potentiometers and their supports (one at a time, carefully marking their position with a marker pen) once a year to check if there is any grease in the area of the potentiometer bearing where the shaft enters the body. The support should be cleaned out to remove excess grease and the potentiometer put back in place using the diagnostic values in the handbook.
If there is evidence of grease in the area of the potentiometer bearing, then the pot. should be replaced, even if it appears to be OK.

VERY IMPORTANT: It is vital to make sure that there is no axial load on the potentiometer shaft. The coupling disks engage by only around 2.5mm before they "bottom out" and thus the coupling should be adjusted to engage only approx 1.5mm. In general, if it feels right, it is right. If the potentiometer snaps into place with a satisfying feel, it will be correct. If it feels than it is being forced the last fraction of a millimeter then it is wrong!

This axial adjustment is only necessary when a potentiometer is being replaced

6.3.2
Once a year the following diagnostic checks should be done to check there the power supplies are functioning correctly and that the potentiometer drives have not moved.

Channels 01 – 05 should be read and checked to make sure that they are within the values indicated in the handbook.

Channel 06 and 08 and 10 are the 3 potentiometer signals on the control arm and can also be checked against the values in the handbook, but channels 07 and channel 09 are the 2 external potentiometers which need careful checking.

Channel 07 is the feedback of the position of the horizontal motion (it is proportional to the angular displacement of the lower arm. For manipulators pre-1999 it should read –1.10 V when the horizontal axis is full forward, to +1.10V when this axis is full back.

During 1999, the total angular displacement was reduced by approx 5 degrees, reducing the full forward voltage to –0.96V. The full back voltage remains at +1.10V

Channel 09 is the feedback of vertical position.
If the manipulator has a standard envelope (ie the vertical height is not reduced because of overhead restrictions in the customer's premises, then the voltage should read +1.40V full up, to –1.00V full down.
Note that full down can be difficult to reach. You can usually get there by pitching the gripper fully up, moving the vertical fully down, with the horizontal full forward, then slowly moving horizontally backwards until the upper and lower arms are almost (but not quite) touching.

If any of these readings are out of specification, they must be put right.

6.3.3
The cabinet behind the operator contains the control equipment for the manipulator. The door to this cabinet should be kept closed to avoid the ingress of dust into the electrics, particularly the power supply module.

6.4 Mechanical:

Manipulators are heavily used (and sometimes **abused**) and it is common sense to inspect frequently for wear or play and the following is a list of mechanical/hydraulic points to inspect and correct as necessary.

6.4.1

In a sandy or dusty environment, it is vital to check that the base is kept clean inside. The KOPEX coil, which contains all the cables, will last the life of the manipulator, but **can** be damaged if the base fills up with sand or rubbish because it will be unable to reduce/increase in diameter as the manipulator rotates. In any case, this area should be kept clean to avoid a fire hazard.

6.4.2

Also in the base, the disk for the rotation limit detectors must be kept free of grease, so it, and its cover and also the detectors should be cleaned on a regular basis.
Failure to keep these clean can cause the Slew (rotation) axis to malfunction.

6.4.3

The slew limit buffers must be regularly checked. They must be in good condition and very strongly bolted if possible (welded if bolting not possible).
UNDERSTAND THE DANGER: If a slew stop is badly welded or bolted it is very dangerous. Not only because it will permit the manipulator to move where it shouldn't, but because when it is compressed, it holds a considerable amount of stored energy. If the welds are not strong enough and break, the stop will be projected with great energy across the work area.

6.4.4

Check that all pins are being lubricated correctly. If any of the pins A to P do not show obvious signs of greasing, the reason needs to found quickly.

Notice that where spherical bearings are used (eg cylinder ends, and links in gripper housing),or (in the case of older machines) plain bushes are used, they must be greased EVERY day.

6.4.5

Shock-absorber:
This very important component must be kept in good condition to reduce stresses on the rest of the manipulator.
The Belville spring washers fatigue eventually **and must be replaced every year.**
The shock absorber should be checked regularly by pitching the gripper down and forcing it slowly into the ground. As the force builds up, the shock absorber should be seen to move around 12 mm, as its springs are compressed.
Even if this appears to be 100% OK, the springs should be replaced once per year.

6.4.6
Gripper Assembly
The gripper fingers obviously take a great deal of abuse during operation of the manipulator. Play in the bearings will occur more rapidly here than in any other area of the machine.

Watch out for excessive side-to-side movement of the fingers. This indicates that the pins and/or bearings of the grippers have worn and should be replaced.

The gripper tips will certainly require some repair from time to time. These are manufactured from ordinary steel which is easily weldable.

The gripper shock absorber spring washers fitted between the gripper housing and the roll shaft, should be regularly checked for damage and replaced as necessary.
They should in any case be replaced at least yearly.

6.4.7
Upper and lower wrists
These suffer from very harsh treatment and should regularly checked for signs of wear (play), oil leaks and/or axial shaft movements. If any excessive play is found, please contact Clansman to discuss the options.

The polyurethene buffers on the YAW axis, should be inspected regularly and replaced yearly even if they appear to be in reasonable condition.

6.4.8
Pitch shaft assembly.
It is important that the pitch movement has a metal to metal stop at both ends, to avoid stresses on the pitch cylinder. This can be checked by trapping a piece of paper between the pitch travel stops. If the paper is not held tight then the pitch stops have worn and should be repaired.
Clansman will provide details of what to do.

6.4.9
Note that when maintenance is done on the machine, it is important to re-torque any bolts which have been disturbed, to the original level, and to "Loctite" them.

There is a chart of recommended bolt torques in the manual in section 6. There are exceptions to the rule (SKF cylinder rod-ends) and the torques for these are given in the same document.

The use of Loctite is as follows:

High stress components (eg. trunnion caps, slew ring):	Loctite 270
General components:	Loctite 242
Hydraulic components:	Loctite 542

In every case where Loctite is to be used, the component must be thoroughly cleaned before application of the liquid.

6.5 Operational settings:

6.5.1	System pressure (ie pressure of hydraulic power unit)	120 Bar
6.5.2	Nitrogen precharge pressure of accumulator on 22KW hydraulic unit	70 Bar
6.5.3	Pressure setting of pressure reducing valve on counterbalance mechanism	65 Bar
6.5.4	Nitrogen pre-charge pressure of accumulator for counterbalance, mounted on manipulator	50 Bar
6.5.5	Temperature setting of alarm for oil temperature in hydraulic unit	60°C
6.5.6	Temperature sensor to switch on cooler	40°C
6.5.7	Temperature sensor to switch on tank heater	10°C

Clansman dynamics is always pleased to hear from Customers.
If you have any comments or helpful advice on maintenance, which you feel should be included in this document, please do not hesitate to contact us.

Lubrication schedule (Ref. Drawings 01 03 878 & 01 02 144)					
Lub point	Description	Drawing No.	Daily	Weekly	Monthly
1	Horizontal cylinder support brg	0103 541		A	
2	Boom brg (bottom)	0103 872		A	
3	Boom brg (bottom)	0103 872		A	
4	Horizontal cylinder support brg	0103 541		A	
5	Boom brg (top)	0103 632		A	
6	Rocker brg	0103 632		A	
7	Rocker brg	0103 632		A	
8	Boom brg (top)	0103 632		A	
10	Super Structure main brg	0103 872		A	
11	Super Structure main brg	0103 872		A	
12	Horizontal cylinder (rear bearing)	0103 540	B		
13	Vertical cylinder (rear bearing)	0103 539	B		
16	Vertical link brg (bottom)	0103 874		A	
17	Vertical link brg (bottom)	0103 874		A	
18	Vertical link brg (top)	0103 873		A	
19	Horizontal link brg (back)	0103 634		A	
20	Crank brg	0103 538		A	
21	Crank brg	0103 538		A	
22	Strut brg (bottom)	0103 675		A	
24	Strut brg (top)	0103 321		A	
25	Strut brg (top)	0103 321		A	
26	Upper wrist brg	0103 328		A	
27	Upper wrist brg	0103 328		A	
28	Horizontal link brg (front)	0103 537		A	
29	Pitch cylinder (rear bearing)	0110 416	B		
30	Yaw pin - lower bearing	0110 352		A	
31	Yaw pin - upper bearing	0110 352		A	
32	Pitch pin	0110 416		A	
33	Horizontal cylinder rod end	0103 541	B		
34	Vertical cylinder rod end	0103 538	B		
35	Shock absorber	0103 349			A
36	Pitch cylinder rod end	0110 416	B		
37	(not used)				
38	Pitch pin	0110 416		A	
41	Slew ring bearing - 4 lub.points	0102 122			A
	Slew ring gear teeth	0102 122			C
42	Roll bearing	0110 418		A	
43	Grip cylinder mounting (rear)	0110 457	B		
44	Grip cylinder rod end	0110 457	B		
45	Grip finger link	0110 457	B		
46	Grip finger link	0110 457	B		
47	Grip finger pivot	0110 457	B		
48	Grip finger pivot	0110 457	B		
49	Grip finger pivot	0110 457	B		
50	Grip finger pivot	0110 457	B		
60	RH Driving outer bearing	0102 194		A	
61	RH Driving inner bearing	0102 194		A	
62	LH Driving inner bearing	0102 194		A	
63	LH Driving outer bearing	0102 194		A	
64	LH Breaking outer bearing	0102 203		A	
65	LH Breaking inner bearing	0102 203		A	
66	RH Breaking inner bearing	0102 203		A	
67	RH Breaking outer bearing	0102 203		A	

Notes:

1.0 While greasing, it is a good idea to inspect for escaping grease at each bearing position.
This will indicate the bearing is adequately lubricated

2.0 Access to slew ring grease points 41 and gear teeth is via 2 moveable cover plates each side of the superstructure base plate.
Ensure cover plates are replaced immediately after greasing to prevent contamination.
CAUTION !! Take all necessary precautions to prevent sand mixing with the gear teeth grease.
This will cause premature tooth wear.

3.0 Grease Types :-

"A" = EP2 multipurpose
"B" = SKF type LGEM2
"C" = Toughgear 90 or "ROCOL" Open Gear Spray

Clansman Dynamics

Rekommenderade oljor och smörjmedel

Empfohlene Schmieröle und Schmierfette

Olio e Lubrificazione Consigliati

Huiles et Lubrifiants Recommand

Recommended Oils and Lubricants

Typ/Typen **Tipo** **Modèle/Type**	**A**	**B**	**C**	
Placering	Rullager	Enkla sfäriska lager	Vridkranskuggar	Hydraulikolja
Anwendungsort	Kegelrollenlager	Einfachespherische--lager	Drehringzahne	Hydraulik Öl
Posto	Cuscinetto a rulli	Cuscinetto sferico	Denti ingranaggio	Olio idraulico
Emplacement	Rouleaux	Sphérique simple		Huile Hydraulique
Location	Roller bearings	Plain spherical	Slew ring teeth	Hydraulic Oil
Tillverkare **Hersteller** **Fabbricante** **Fabricant** **Manufacturer**				
BP	Energrease LS-EP2			
Castrol	Spherol			Hyspin AWS46
Esso	Beacon EP2			
Houghton-Vaughan		Cosmolube ML2		
Mobil	Mobilux EP2			
Total	Multis EP2		Open Gear Fluid	
Texaco	Multifak EP2			Rando H
Shell	Alvania EP2			Tellus 46
SKF		LGEM2		

Bolt	Through bolt	Hex bolt Grade 8.8	Capscrew Grade 12.9
M6		11	19
M8		28	47
M10		56	94
M12		98	165
M14		159	268
M16		243	410
M20	180	472	796
M24		816	1376
M27		1195	2017
M30		1686	2844
M36		3000	5062
M42		4888	8248

rev 1 torques revised 15/10/96, at

Clansman Dynamics Limited

TITLE BOLT TORQUES (Nm)

Scale NTS	Drawn at	App Alan Thomson	Date 23/7/96
15/001	Drg. No. 1104 003	Sheet 1 OF 1	Rev. 1

List of Drawings

Drawing No	Drawing Title
0102122	Base Assembly
0103536	Arrangement of Boom and Superstructure
0103872	Pin "A" Assembly
0103874	Pin "B" Assembly
0103873	Pin "C" Assembly
0103632	Pin "D" Assembly
0103877	Pin "E" Assembly
0103537	Pin "F" Assembly
0103328	Pin "G" Assembly
0103321	Pin "H" Assembly
0110675	Pin "J" Assembly
0103538	Pin "K" Assembly
0103539	Pin "L" Assembly
0103541	Pin "P" Assembly
0103540	Pin "Q" Assembly
0103349	Shock Absorber Assembly
0110439	Pitch Shaft Assembly
0110352	Yaw Pin Assembly
0110418	Roll Axis Assembly
0101457	Gripper Assembly
0101444	Gripper Spring Assembly
0115106	Arrangement of Control Arm Rest
0115085	Arrangement of Control Arm
0115089	Arrangement of Covers on Control Arm
0114033	Arrangement of Cabin
6821	Hydraulic Power Unit Schematic
6821	Hydraulic Power Unit Arrangement
6821	Hydraulic Power Unit Parts Lists
0102144	Trolley Assembly
0102194	Arrangement of Trolley Wheel (Driver)
0102203	Arrangement of Trolley Wheel (Braked)
0316286	Manipulator Hydraulic Circuit
0316296	Manipulator Hose and Fittings Assembly
0316287	Carriage Hydraulic Circuit
0316295	Carriage Hose and Fittings Assembly
0116157	Boom Manifold
0316208	Main Manifold
0102226	Assembly of Slew Switches
0114025	Arrangement of Air Conditioning
0103878	Diagram of Lubrication Points

Drawing No	Drawing Title
1217083	Control Handle Wiring
1217088	Details of Pot 5 and Dead-Mans-Handle
1217078	Control Arm Motors and Pots (Vert & Horiz)
2217336	Superstructure Junction Box
2217204	Cabling to Boom Manifold
1217086	Details of Operators Panel
2217356	Details of Left-hand Controls
2217387	Cabling to Large Main Manifold
2217331	Block Diagram of Electrics
2217414	LTAC Scheme
2217422	Layout of Carriage
2217330	Details of Terminals in Manipulator Control Panel
2217328	Connections to Manipulator Control Card
1217084	Connections to Linear Amplifier Card
2217286	Connections to XP +24/+15/-15V Supply
2217423	Connections to Air Conditioning Unit

Avsnitt 7.3

Potentiometerinställningar, kontrollkort (C510 Maskin)

Pot	Funktion	Inställning (%)
RV1	Horisontell gräns (bakåt)	10 turn pot (ch 43, 0.63V)
RV2	Horisontell gräns (framåt)	10 turn pot (ch 42, -0.71V)
RV3	Vridrörelse långsam hastighet	100
RV4	Vridrörelse acceleration	50
RV5	Vridrörelse spänningsutdata	60
RV6	Vridrörelse omkopplingspunkt	Variable
RV7	Felsökning kalibrering	
RV8	Vridrörelse ström till servoventil	50
RV9	Vertikal förstärkning	80
RV10	Vertikal spänning ut	100
RV11	Linked out	
RV12	Linked out	
RV13	% Vertikal avvikelse	70
RV14	Vertikal acceleration	35
RV15	Vertikal ström ut	75
RV16	Linked Out	
RV17	RV17 (SFL)	
RV18	Vertikal korrigering %	20
RV19	Horisontell förstärkning	45
RV20	Linked out	
RV21	Linked out	
RV22	% Horisontell avvikelsefaktor	40
RV23	Horisontell acceleration	50
RV24	Horisontell servo ström	70
RV25	Horisontell spänningsutdata	100
RV26	Vridrörelse noll	
RV27	Tryckreduceringsventil	75
RV28	Tryckreducering (lägsta värde)	60
RV29	% Från dither oscillator (100%=noll)	100
RV30	Oscillatorfrekvens	50
RV31	SFL bakåt	(Ch63, +0.3V)
RV32	Felsökning Scaling	
RV33	Felsökning nollpunkt	

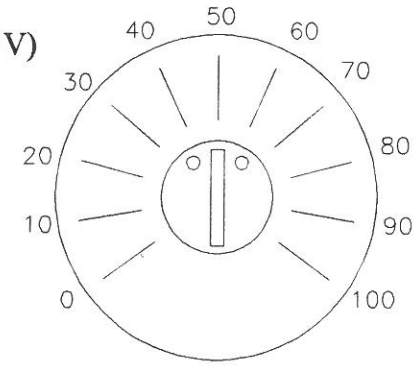

ANM. Varje potentiometer har 11 delstreck. Det första delstrecket (dvs. så mycket moturs som möjligt) är NOLL. Det sista delstrecket (dvs. så mycket medurs som möjligt), är 10 (eller 100%). Mellanläget, som är mitt uppe på potentiometern, är 5 (eller 50%).

Avsnitt 7.3

Potentiometerinställningar, Förstärkningskort (C510 Maskin)

Pot	Funktion	Inställning (%)
RV1	Summa horisontell återkoppling (feedback)	55%
RV2	Avvikelsefaktor (horisontell)	0%
RV3	Summa vertikal återkoppling (feedback)	40%
RV4	Avvikelsefaktor (vertikal)	0%
RV5	Horisontell modifiering	75%
RV6	Vertikal modifiering	65%
RV7	Horisontell balans (dvs. bak/fram)	50%
RV8	Vertikal balans (dvs. upp/ner)	50%
RV9	Symmertibalans	50%

ANM. Varje potentiometer har 11 delstreck. Det första delstrecket (dvs. så mycket moturs som möjligt) är NOLL. Det sista delstrecket (dvs. såmycket medurs som möjligt), är 10 (eller 100%). Mellanläget, som är mitt uppe på potentiometern, är 5 (eller 50%).

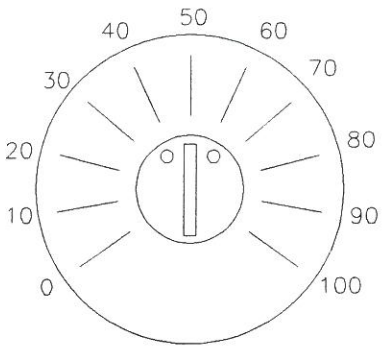

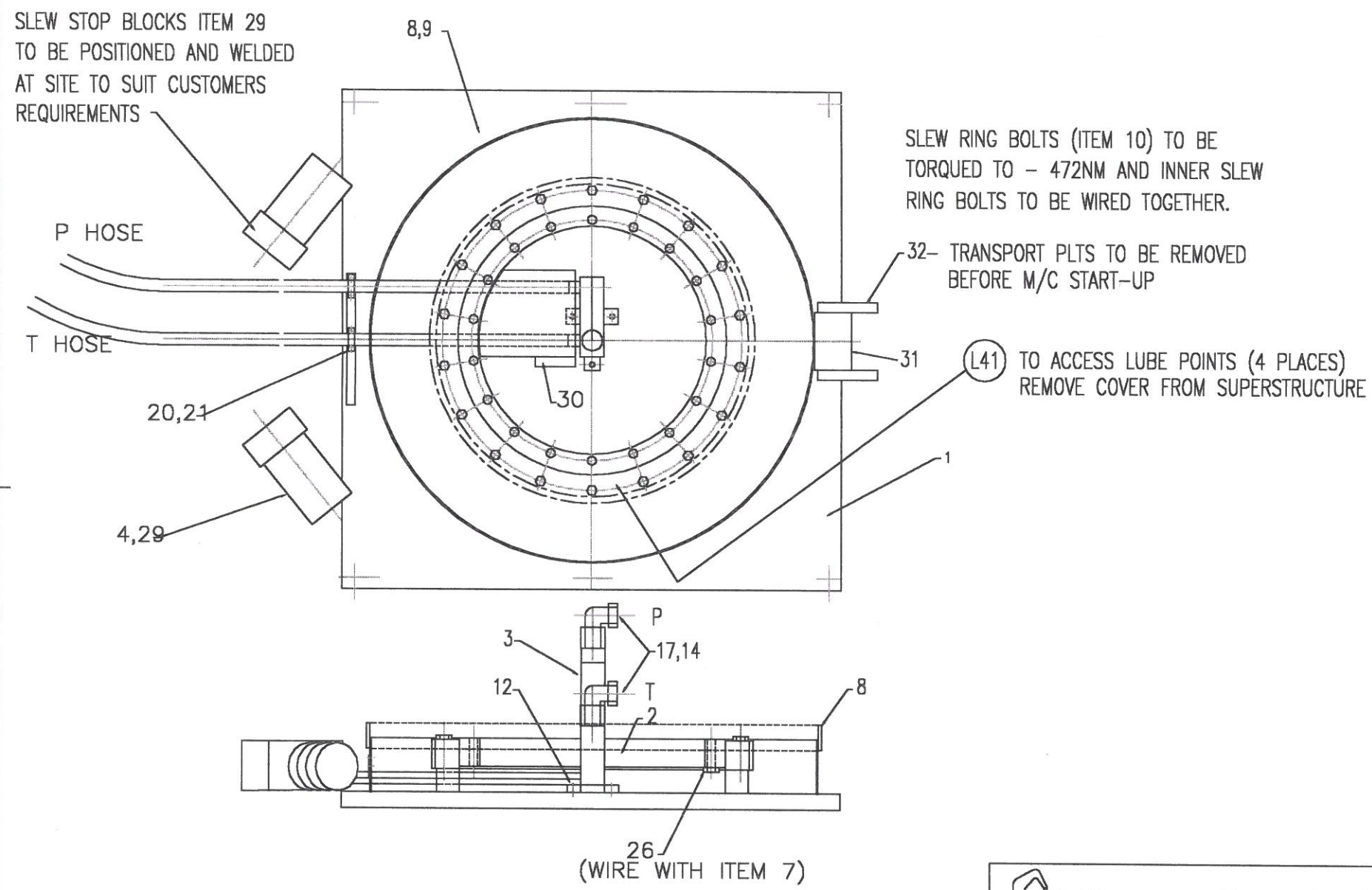

Clansman Dynamics Limited

TITLE BASE ASSEMBLY	Copyright © 1997 This drawing is the property of Clansman Dynamics Limited It may not be copied or revealed without consent and must be returned upon request.		
Scale NTS	Drawn RC	Approved	Date 22/9/97
E	Drg. No. 0102 122	Sheet 1 OF 1	Rev. 0

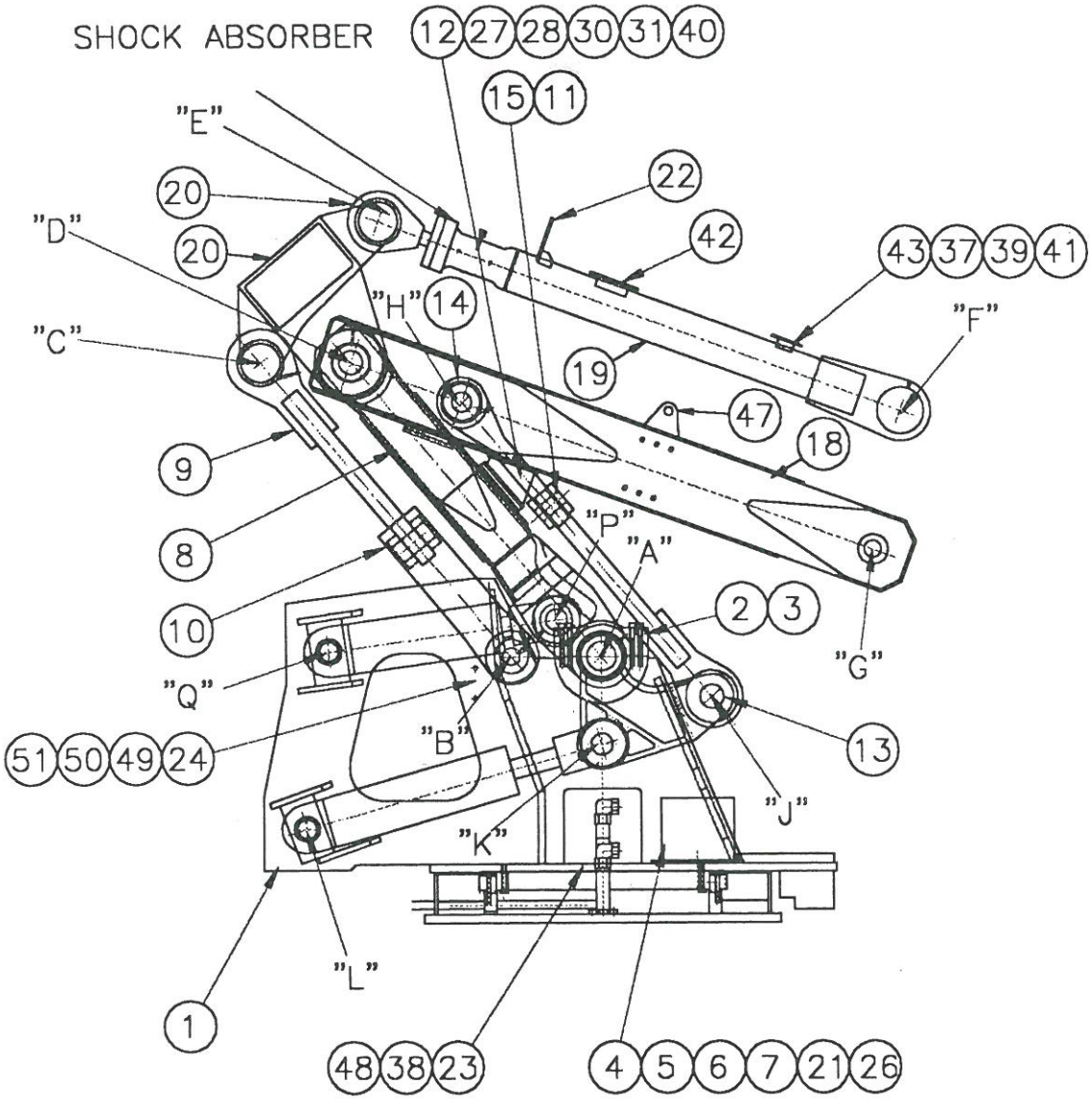

(PINION BOLTS TO BE WIRED WITH ITEM 21)

Clansman Dynamics Limited

TITLE
ARRANGEMENT OF BOOM & SUPERSTRUCTURE – C3010/E2

Scale NTS	Drawn RC	App	Date 18/11/97
164	Drg. No. 0103 536	Sheet 1 OF 1	Rev. 0

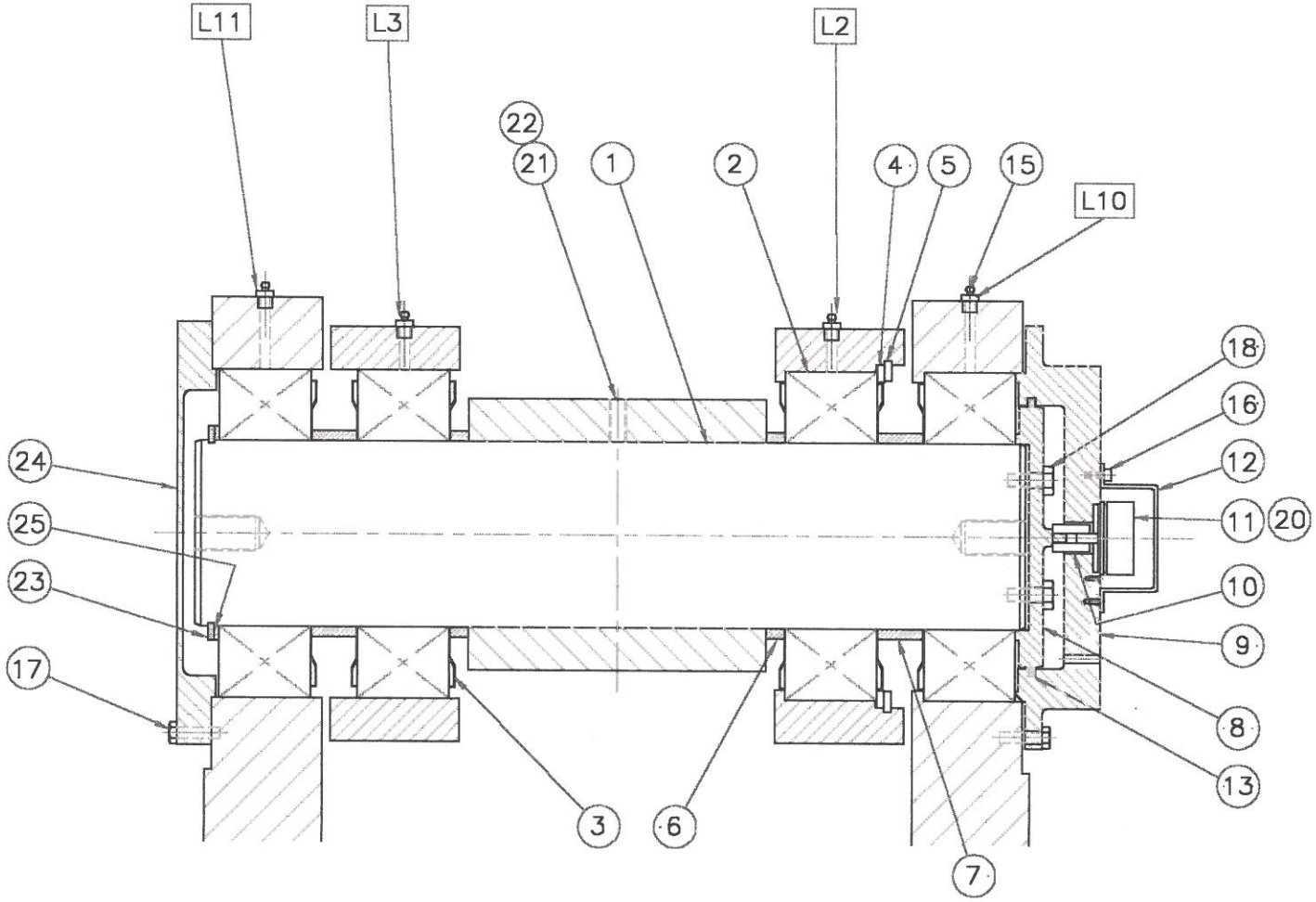

Clansman Dynamics Limited

TITLE ARRANGEMENT OF PIN "A" C4010		Copyright © 1999 This drawing is the property of Clansman Dynamics Limited It may not be copied or revealed without consent and must be returned upon request.	
Scale NTS	Drawn FJ	App	Date 26/11/99
E	Drg. No. 0103 872	Sheet 1 OF 1	Rev. 0

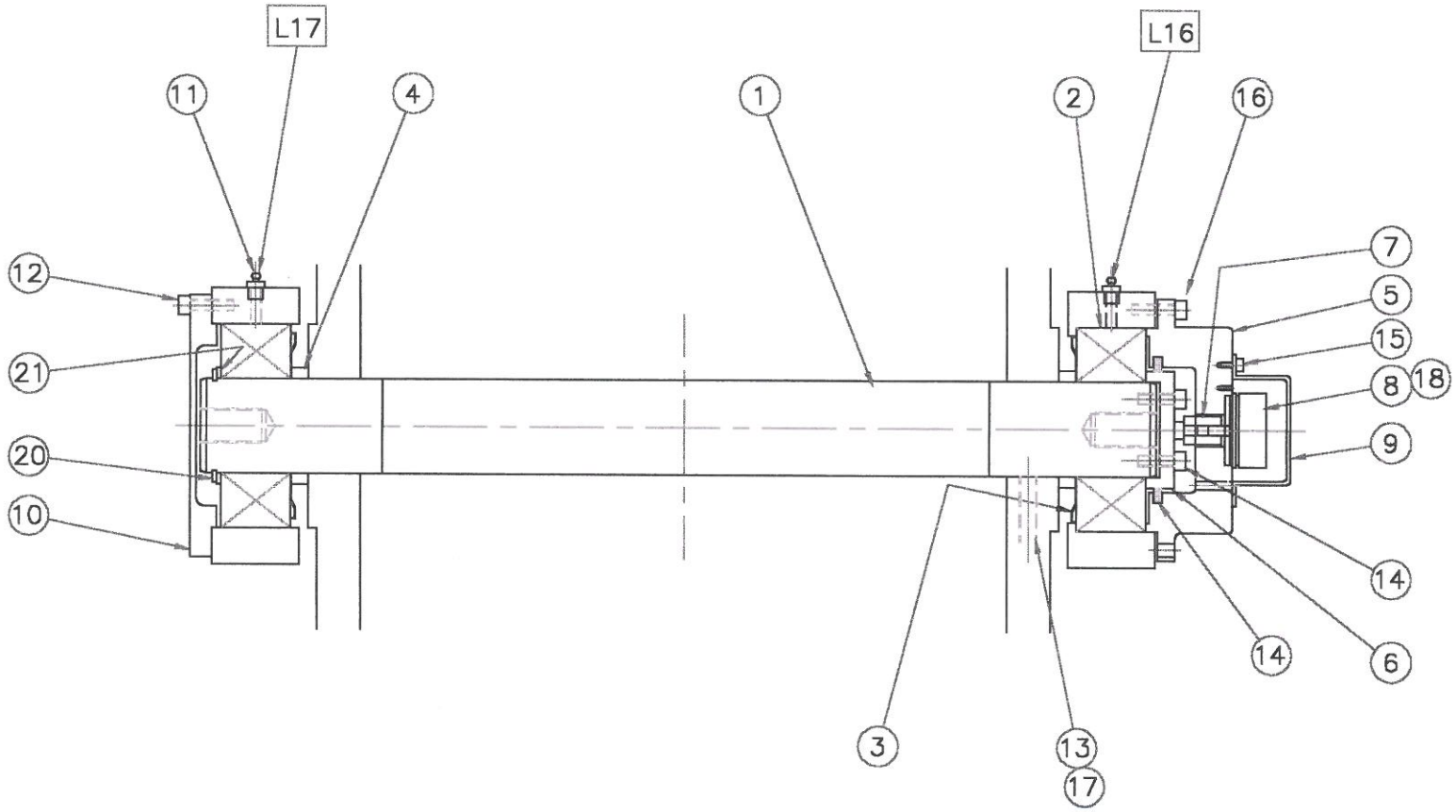

Clansman Dynamics Limited

TITLE	ARRANGEMENT OF PIN "B" C4010	Copyright © 1999 This drawing is the property of Clansman Dynamics Limited It may not be copied or revealed without consent and must be returned upon request.	
Scale NTS	Drawn FJ	App	Date 26/11/99
E	Drg. No. 0103 874	Sheet 1 OF 1	Rev. 0

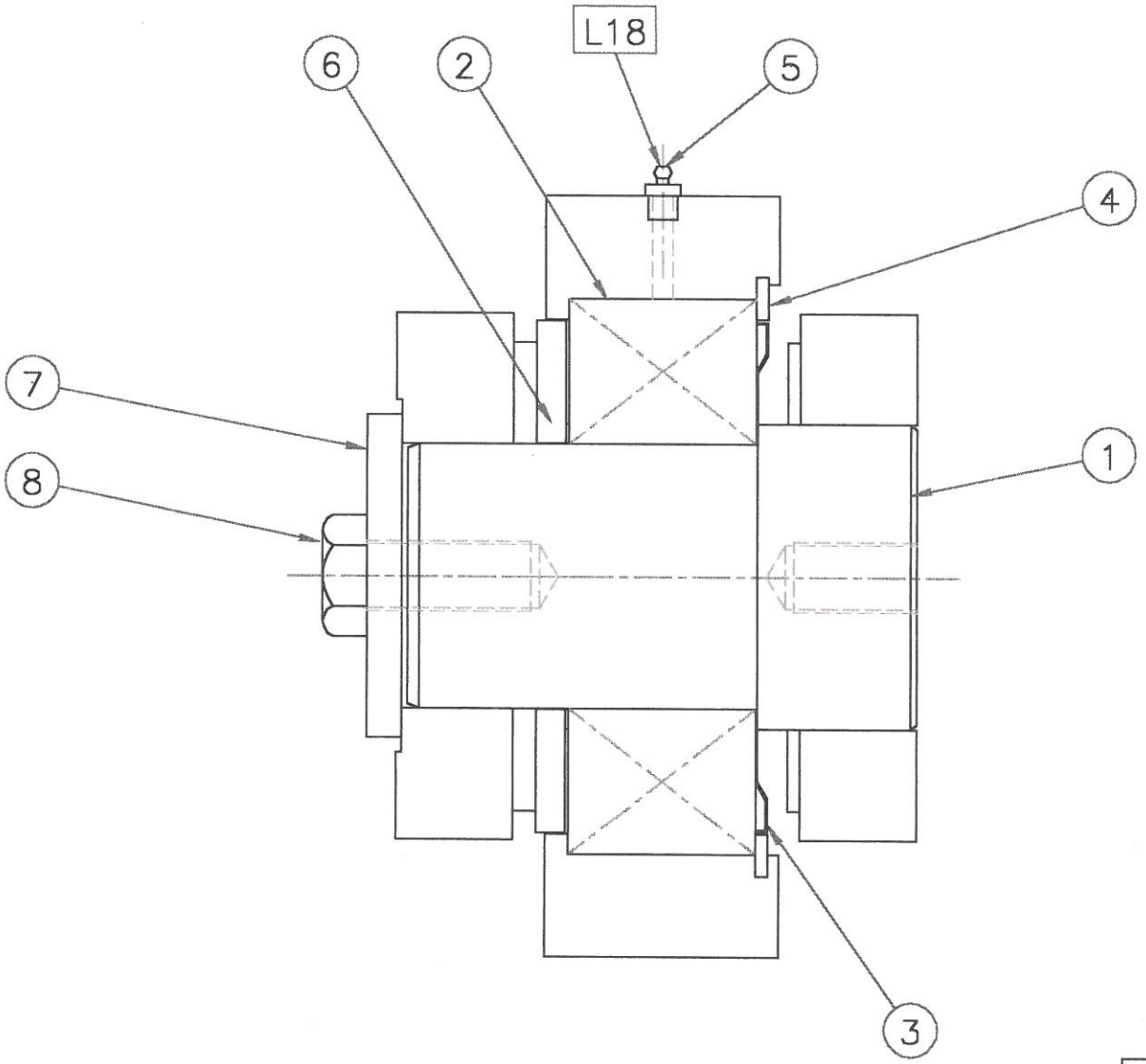

Clansman Dynamics Limited

TITLE ARRANGEMENT OF PIN "C" C4010			
Scale NTS	Drawn FJ	App	Date 26/11/99
E	Drg. No. 0103 873	Sheet 1 OF 1	Rev. 0

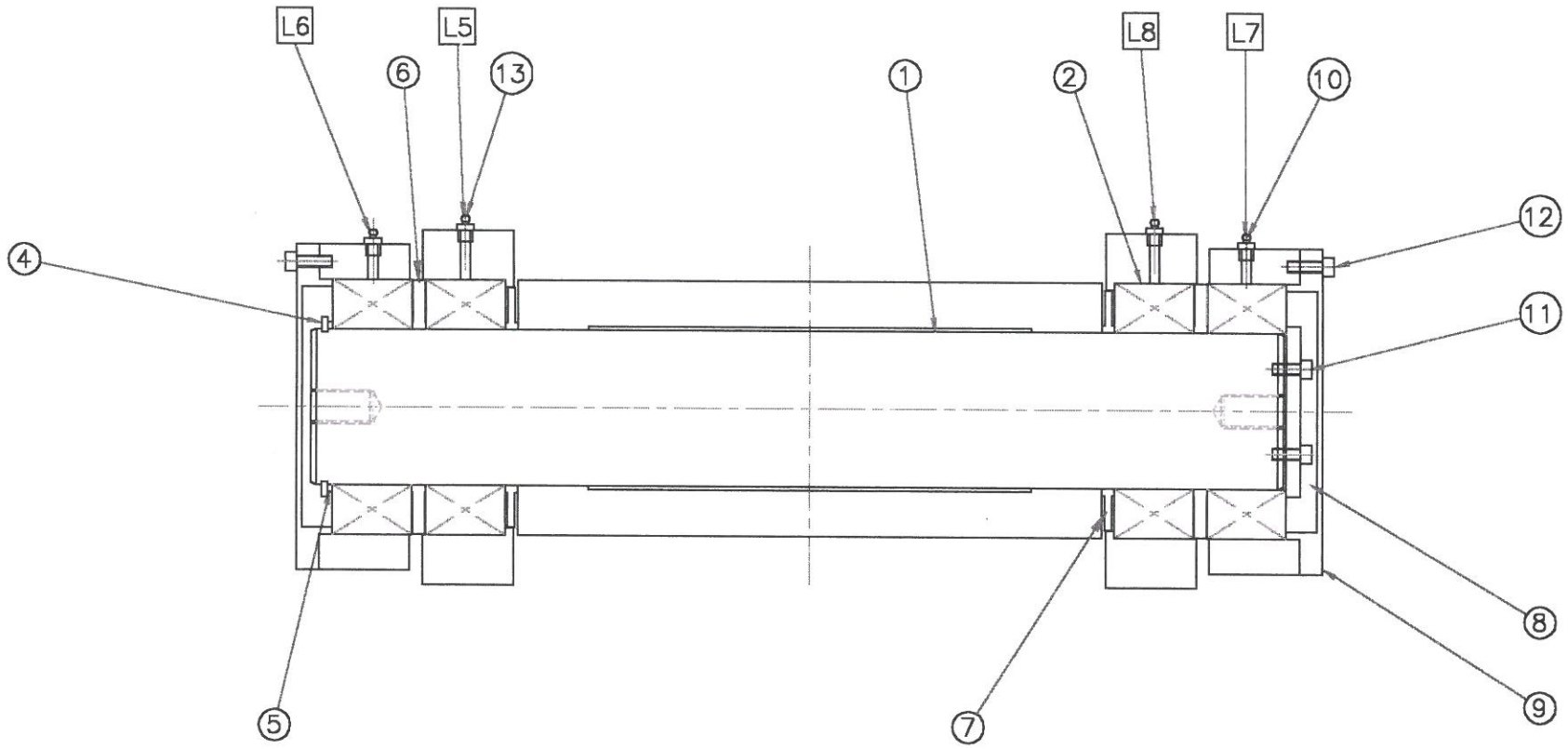

REV	DESCRIPTION	DATE	BY/CHKD
1	Grubscrew item 14/15 removed	6/1/00	FJ

Clansman Dynamics Limited

TITLE
ARRANGEMENT OF PIN
AT "DD" C4010

Scale 1/5	Drawn RC	Approved	Date 22/9/98
E	Drg. No. 0103 632	Sheet 1 OF 1	Rev. 1

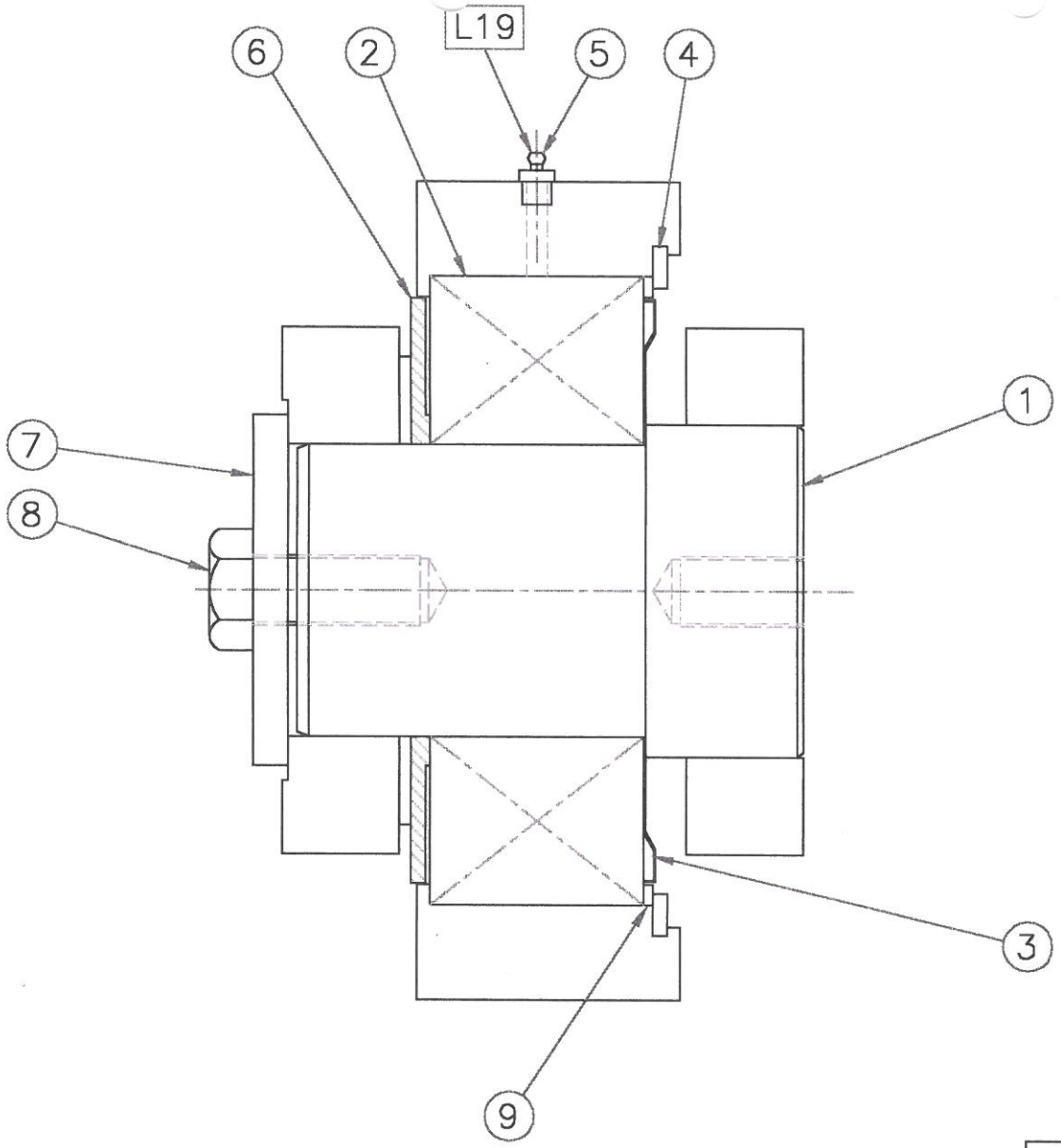

Clansman Dynamics Limited

TITLE ARRANGEMENT OF PIN "E" C4010		Copyright © 1996 This drawing is the property of Clansman Dynamics Limited It may not be copied or revealed without consent and must be returned upon request.	
Scale NTS	Drawn RC	App	Date 15/5/96
E	Drg. No. 0103 877	Sheet 1 OF 1	Rev. 0

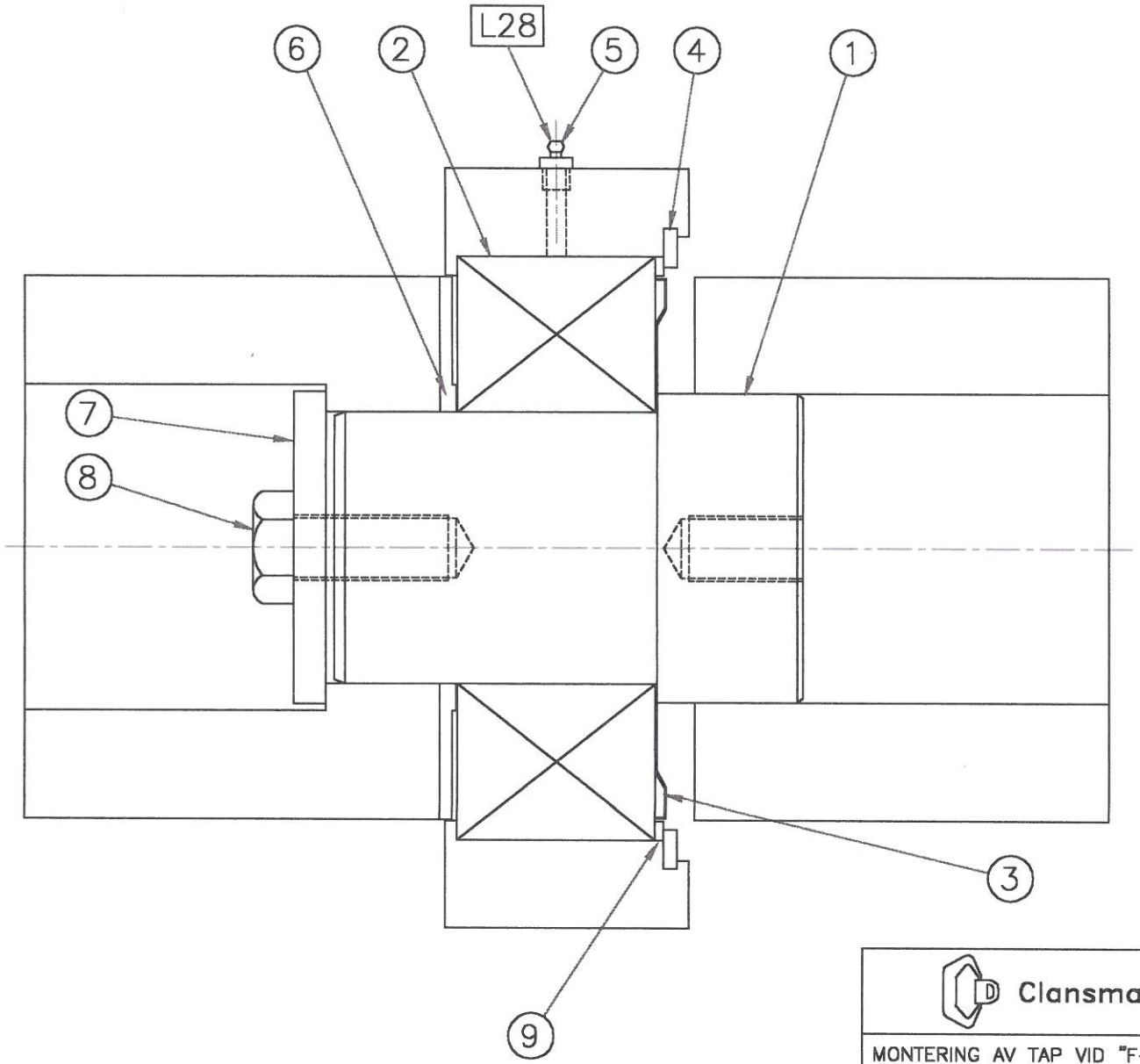

Clansman Dynamics Limited

MONTERING AV TAP VID "F–F"
STIFTANDORDNUNG IM BEREICH "FF"
INSIEME ALBERO, SESIONE "FF"
ENSEMBLE DE LA TIGE À LA SECTION "FF"
ARRANGEMENT OF PIN "F"

Scale NTS	Drawn RC	Approved	Date 18/11/97
E	Drg. No. 0103 537	Sheet 1 OF 1	Rev. 0

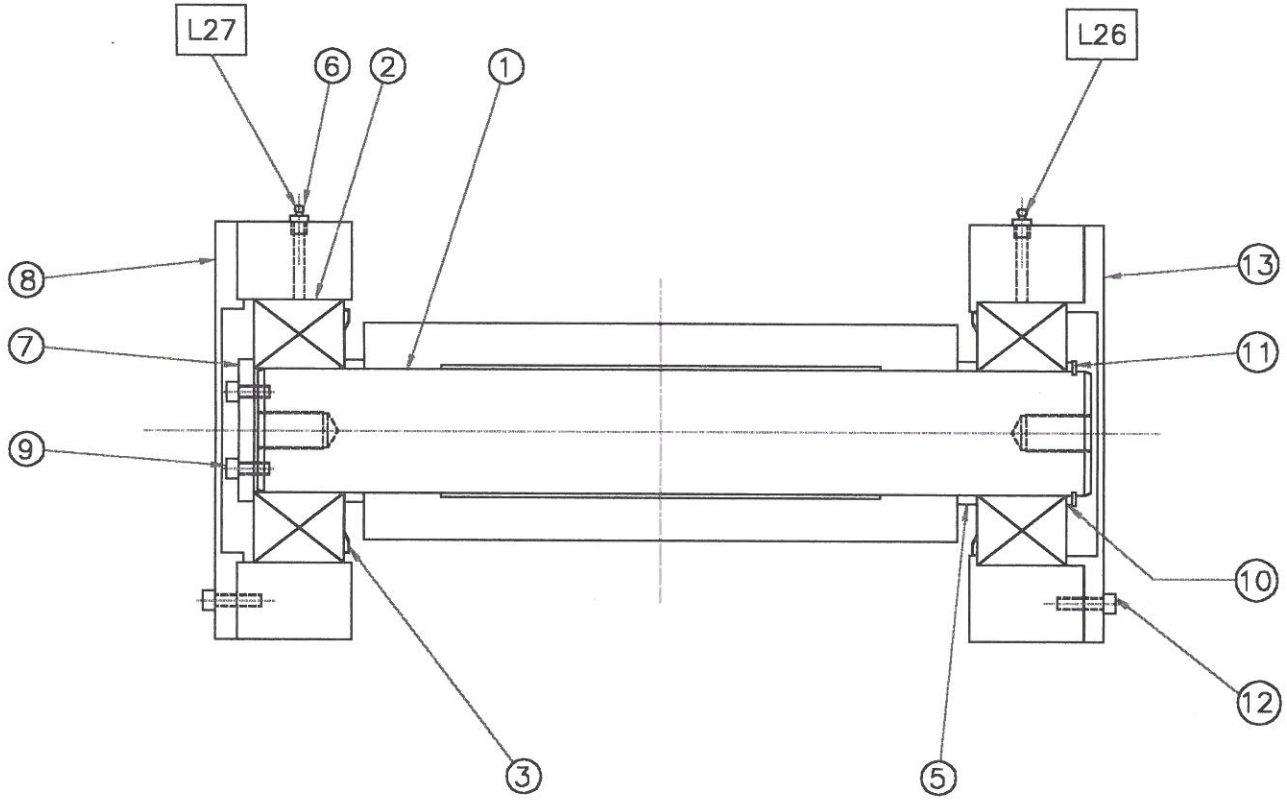

Clansman Dynamics Limited

TITLE ARRANGEMENT OF PIN "G" C4010		Copyright © 1996 This drawing is the property of Clansman Dynamics Limited It may not be copied or revealed without consent and must be returned upon request.	
Scale NTS	Drawn RC	App	Date 20/5/96
E	Drg. No. 0103 328	Sheet 1 OF 1	Rev. 0

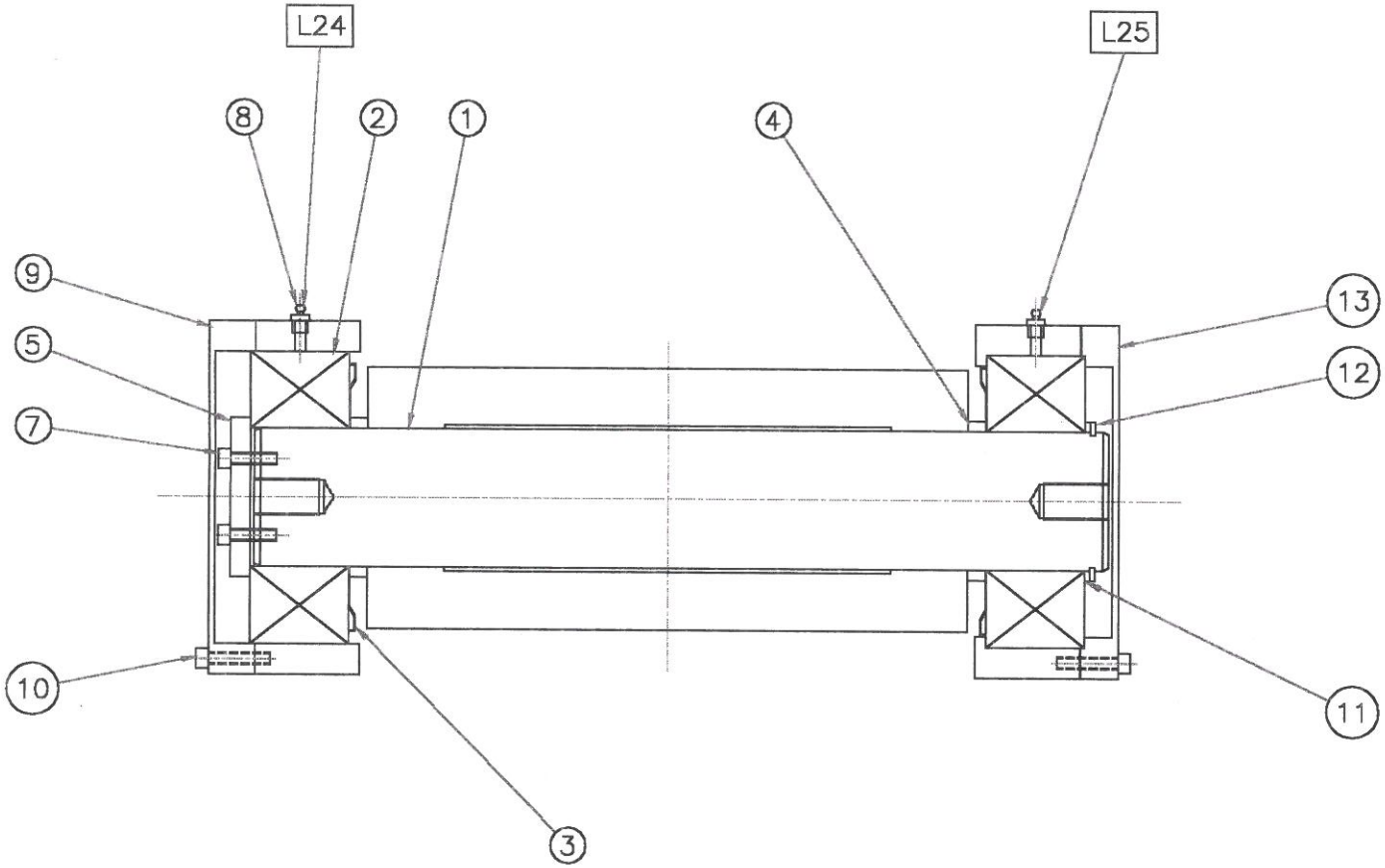

Clansman Dynamics Limited

TITLE ARRANGEMENT OF PIN "H" C4010		Copyright © 1996 This drawing is the property of Clansman Dynamics Limited It may not be copied or revealed without consent and must be returned upon request.	
Scale NTS	Drawn RC	App	Date 20/5/96
E	Drg. No. 0103 321	Sheet 1 OF 1	Rev. 0

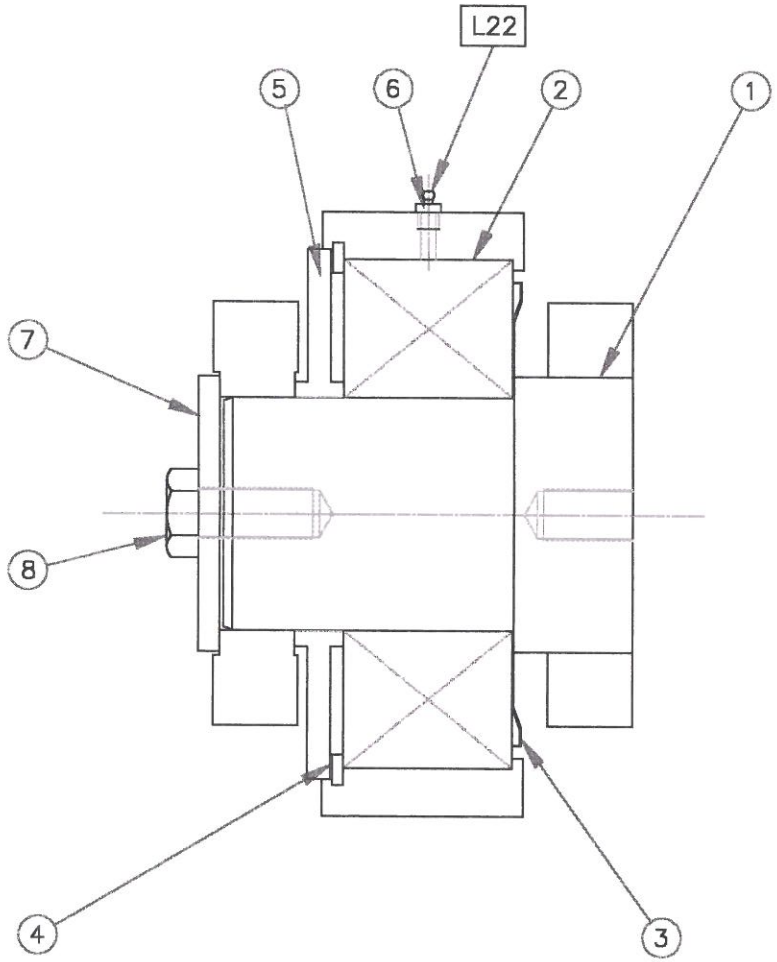

Clansman Dynamics Limited

MONTERING AV TAP VID "J–J"
STIFTANDORDNUNG IM BEREICH "JJ"
INSIEME ALBERO, SESIONE "JJ"
ENSEMBLE DE LA TIGE À LA SECTION "JJ"
ARRANGEMENT OF PIN "J"

Scale 1:5	Drawn FJ	Approved	Date 27/1/99
E	Drg. No. 0110 675	Sheet 1 OF 1	Rev. 0

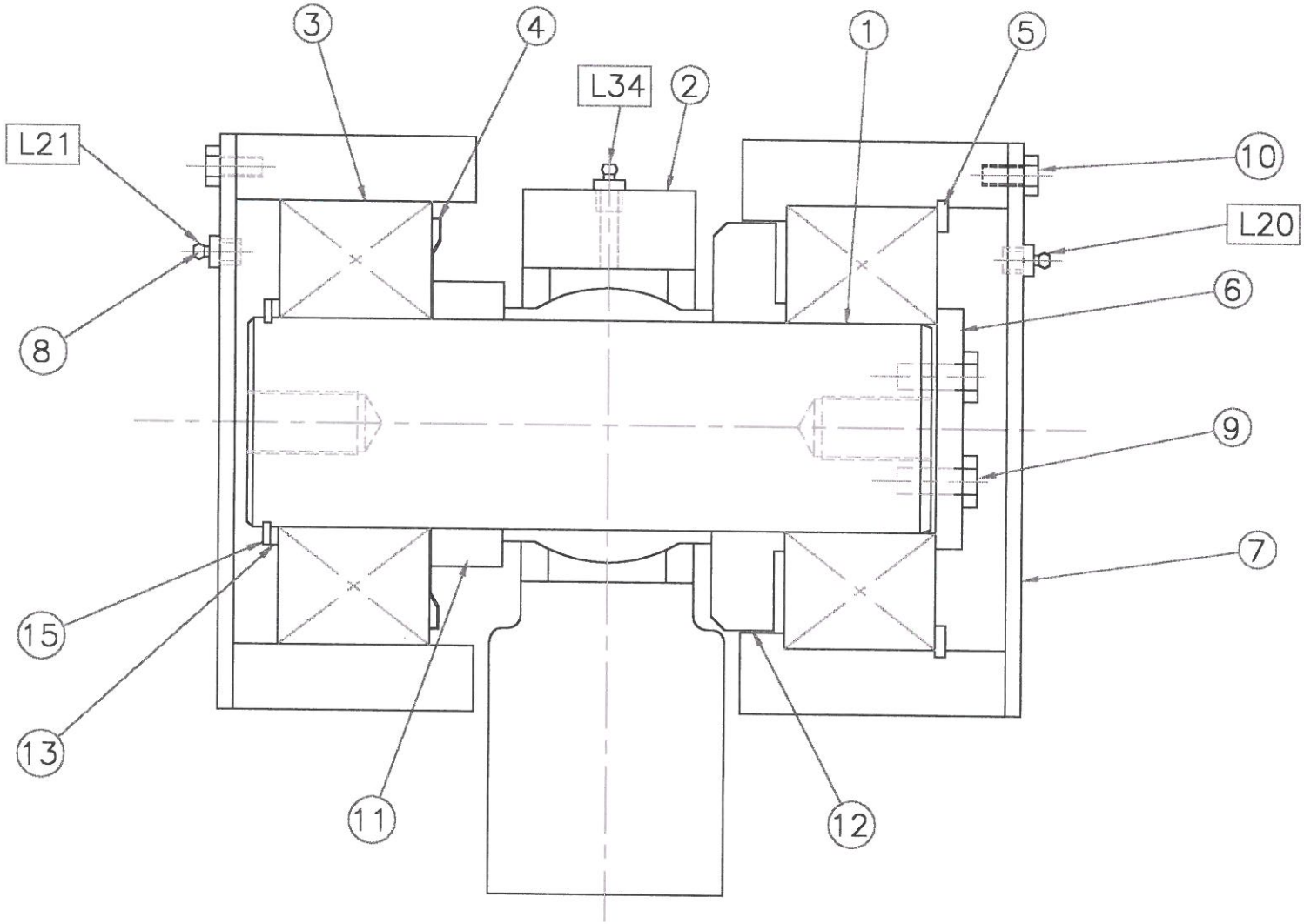

Clansman Dynamics Limited

TITLE	ARRANGEMENT OF PIN "K" C4010	Copyright © 1997 This drawing is the property of Clansman Dynamics Limited It may not be copied or revealed without consent and must be returned upon request.	
Scale NTS	Drawn GMcC	App	Date 19/11/97
164	Drg. No.01 03 538	Sheet 1 OF 1	Rev. 0

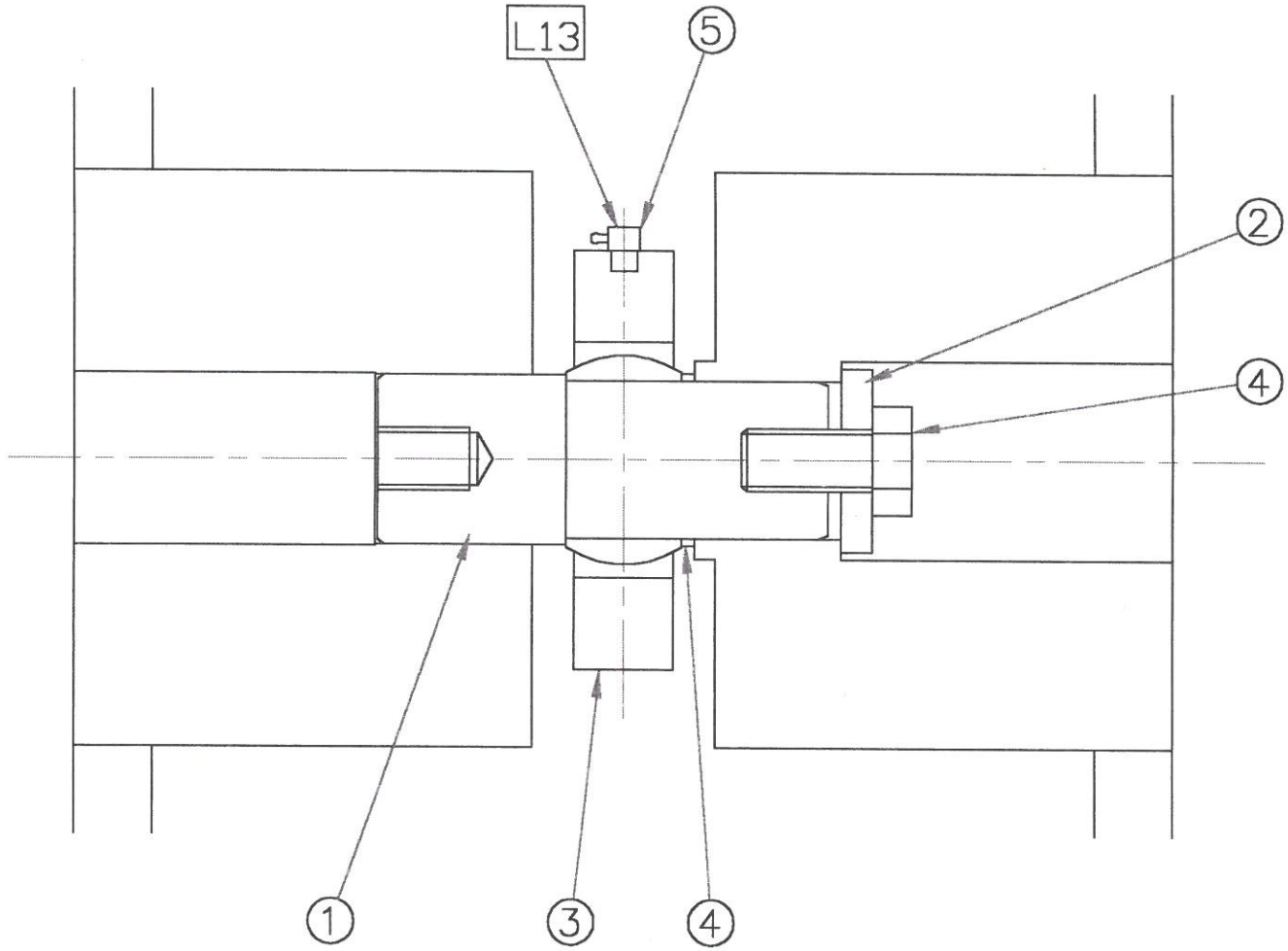

Clansman Dynamics Limited

TITLE ARRANGEMENT AT SECTION "LL"			
Scale NTS	Drawn GMcC	Approved	Date 19/11/97
E	Drg. No.01 03 539	Sheet 1 OF 1	Rev. 0

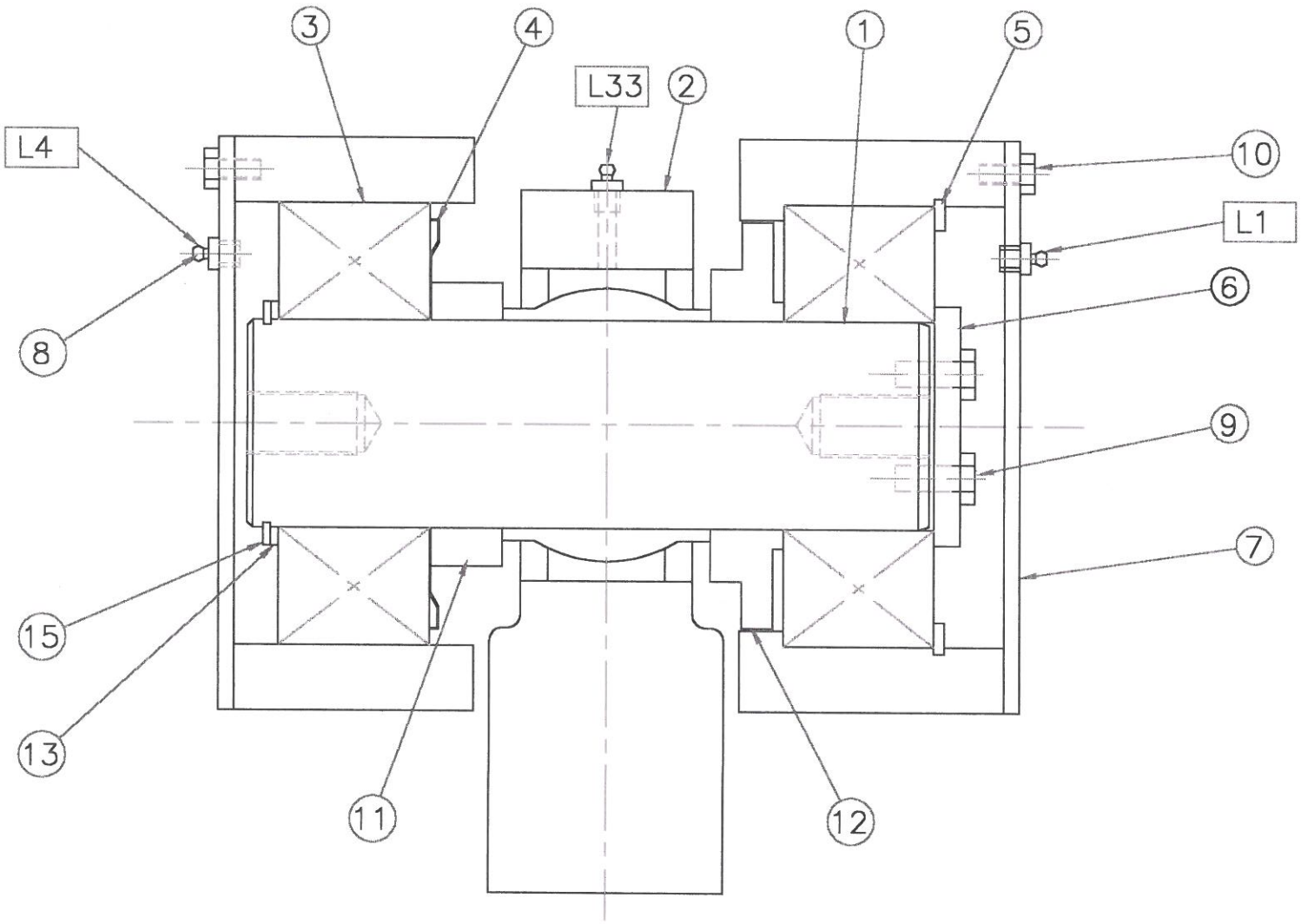

Clansman Dynamics Limited

TITLE	ARRANGEMENT OF PIN "P" C4010	Copyright © 1997 This drawing is the property of Clansman Dynamics Limited It may not be copied or revealed without consent and must be returned upon request.	
Scale NTS	Drawn GMcC	App	Date 19/11/97
E	Drg. No.01 03 541	Sheet 1 OF 1	Rev. 0

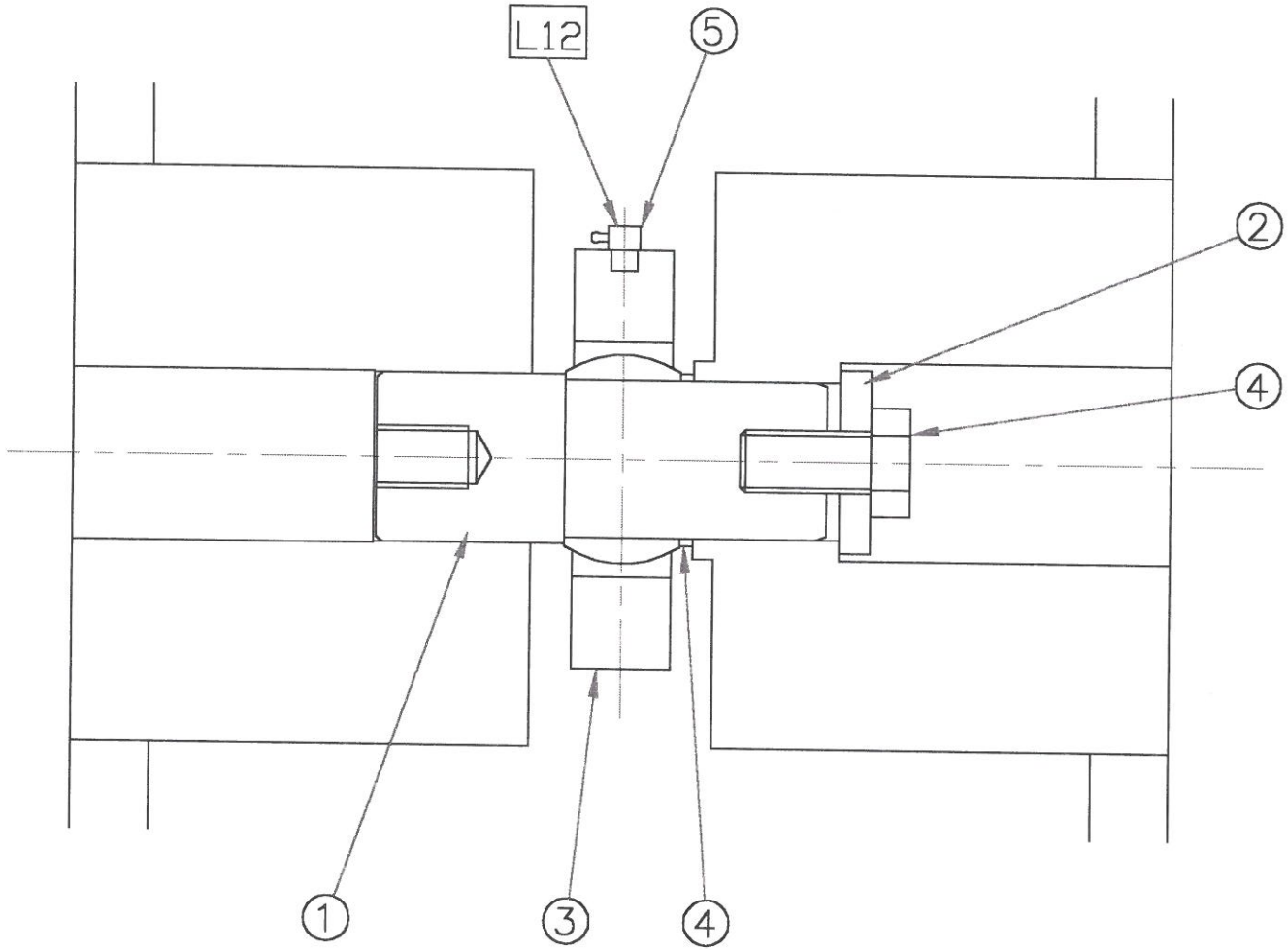

Clansman Dynamics Limited

TITLE
ARRANGEMENT AT
SECTION "QQ"

Scale NTS	Drawn GMcC	Approved	Date 19/11/97
E	Drg. No.01 03 540	Sheet 1 OF 1	Rev. 0

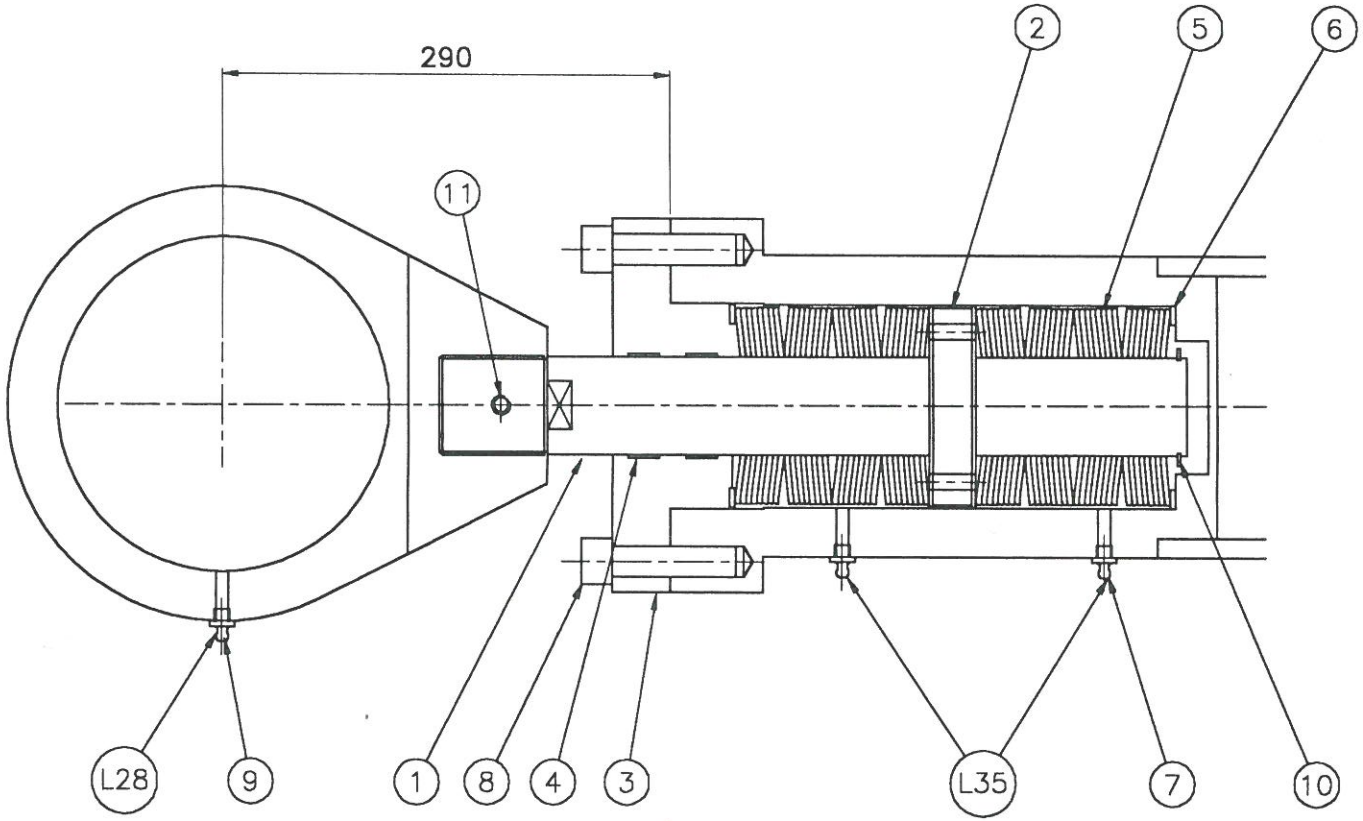

REV	DESCRIPTION	DATE	BY/CHKD

Clansman Dynamics Limited

TITLE
ARRGT OF SHOCK ABSORBER
ON HORIZONTAL LINK

Scale NTS	Drawn RC	App	Date 9/8/96
E	Drg. No. 0103 349	Sheet 1 OF 1	Rev. 1

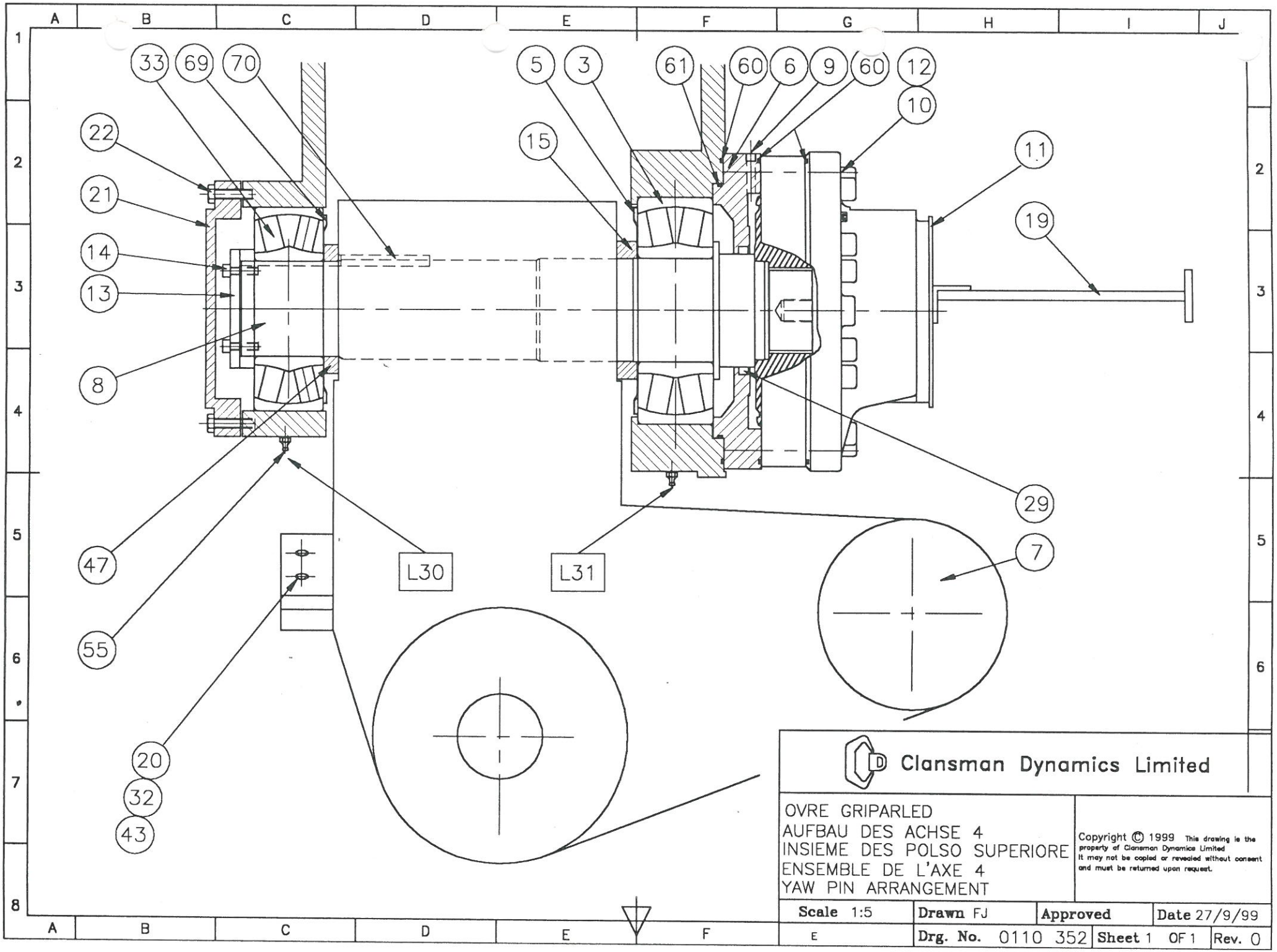
33
69
70
5
3
61
60
6
9
60
12
10
22
15
11
21
19
14
13
8
29
47
L30
L31
7
55
20
32
43
Clansman Dynamics Limited
OVRE GRIPARLED
AUFBAU DES ACHSE 4
INSIEME DES POLSO SUPERIORE
ENSEMBLE DE L'AXE 4
YAW PIN ARRANGEMENT
Copyright © 1999 This drawing is the property of Clansman Dynamics Limited It may not be copied or revealed without consent and must be returned upon request.
Scale 1:5
Drawn FJ
Approved
Date 27/9/99
E
Drg. No. 0110 352
Sheet 1 OF 1
Rev. 0

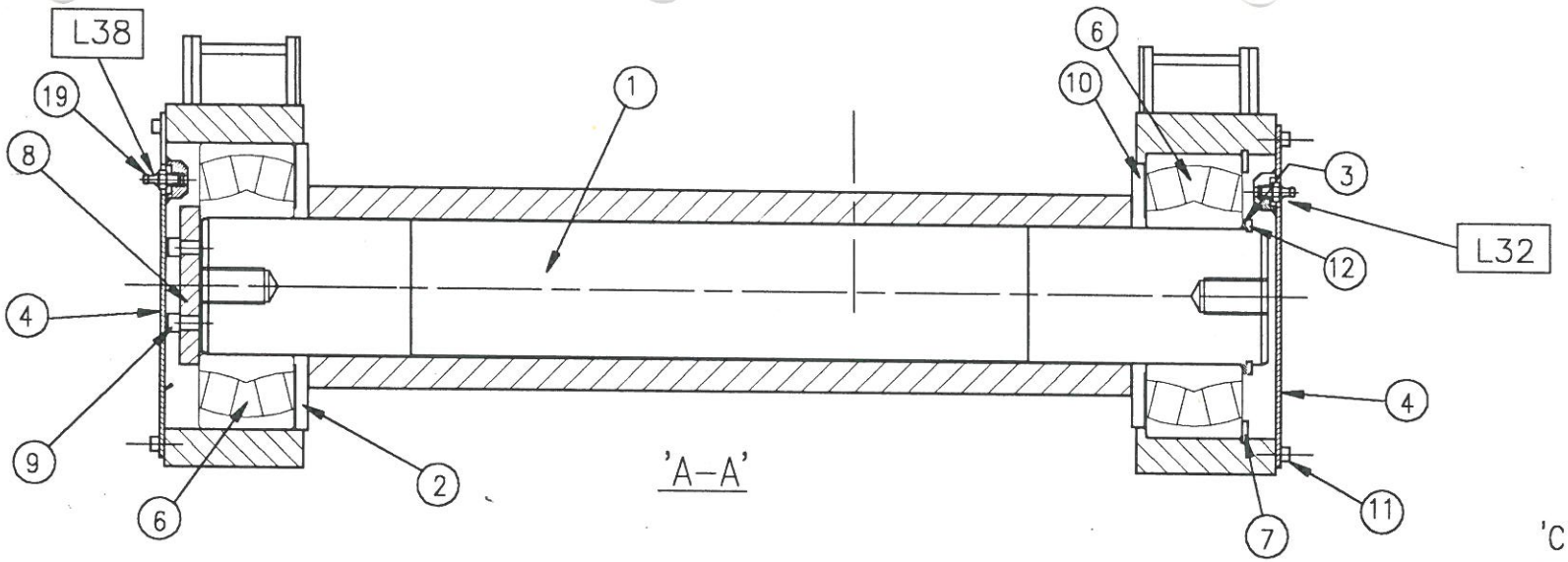

'A–A'

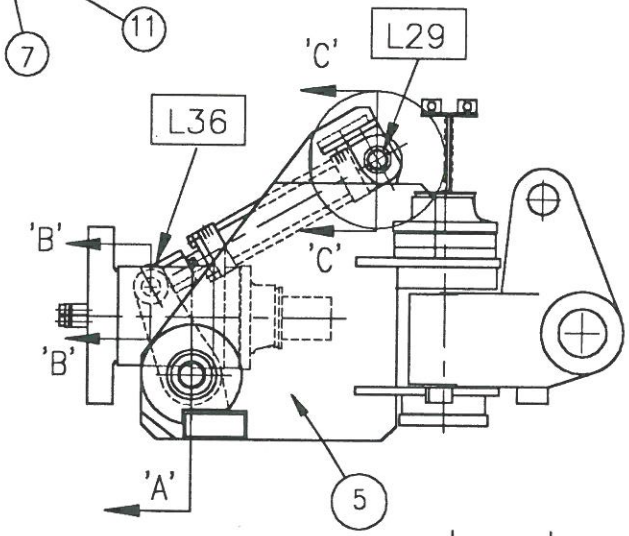

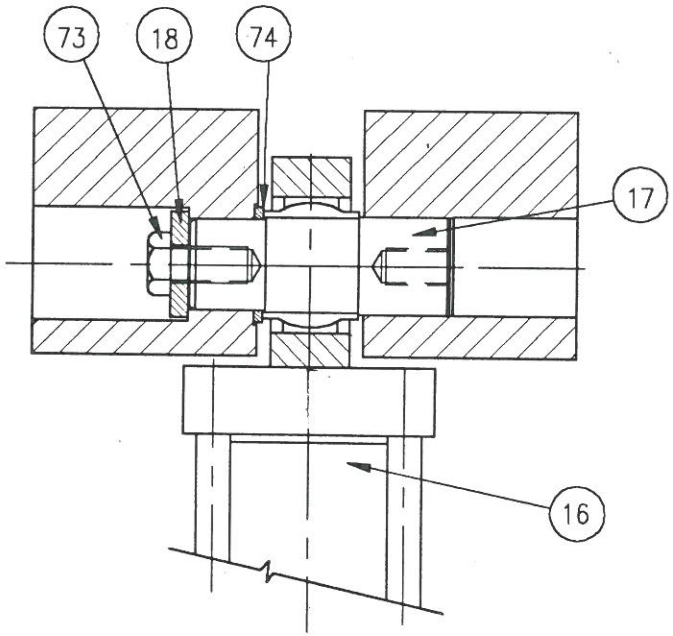

'C–C'

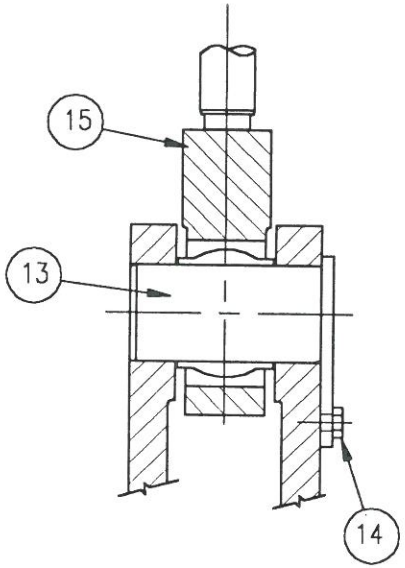

'B–B'

REV	DESCRIPTION	DATE	BY/CHKD

Clansman Dynamics Limited

MONTERING AV PIVÅ–SPRINT
AUFBAU DES ACHSE 5
ALBERO SOLLEVAZIONE DELLA PINZA
ENSEMBLE D'ARBRE DE TANGAGE
PITCH SHAFT ARRANGEMENT

Scale 1:5	Drawn FJ	Approved	Date 10/1/2000
E	Drg. No. 0110 439	Sheet 1 OF 1	Rev. 0

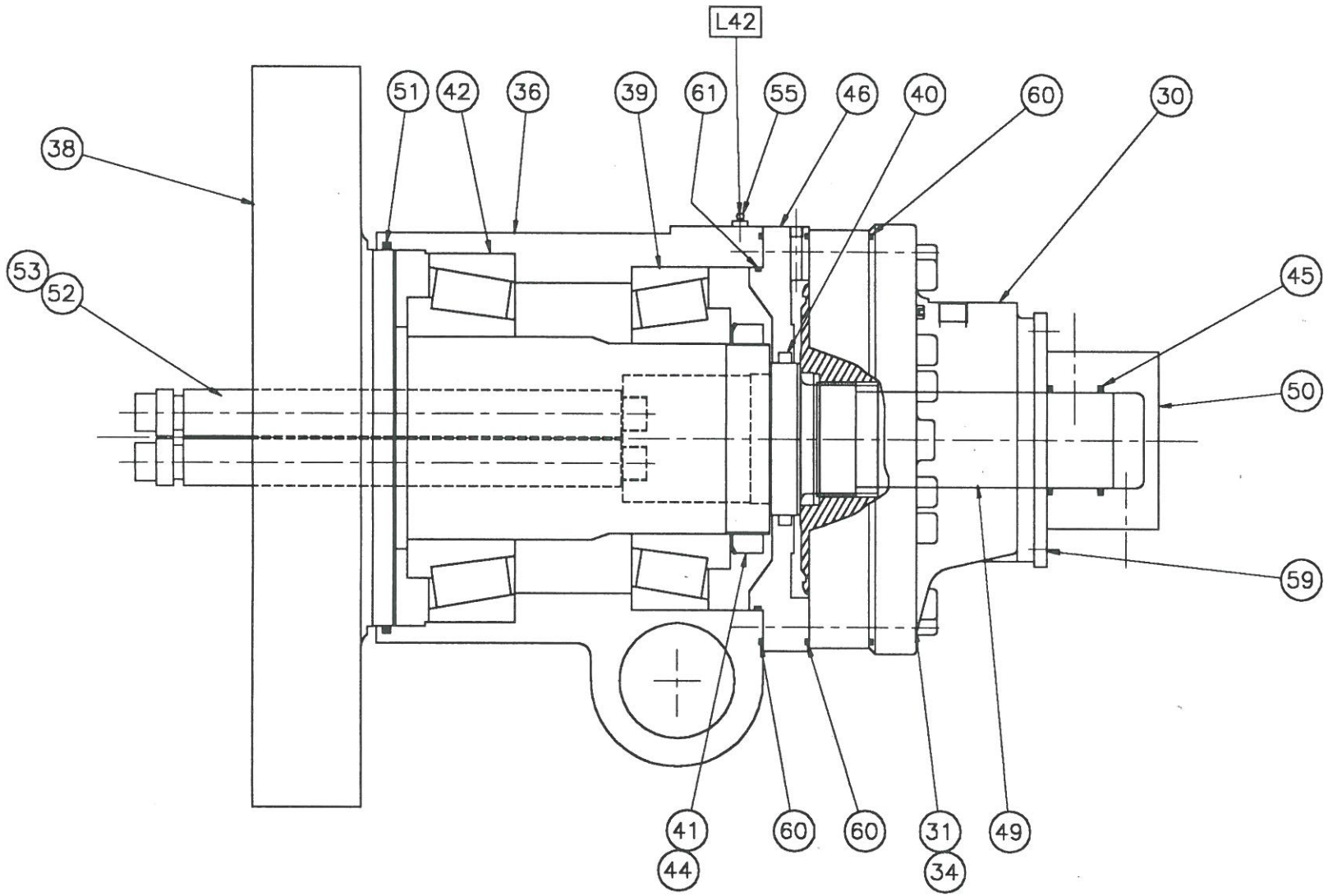

Clansman Dynamics Limited

TITLE ROLL AXIS ASSEMBLY C4010	Copyright © 1999 This drawing is the property of Clansman Dynamics Limited It may not be copied or revealed without consent and must be returned upon request.		
Scale NTS	Drawn RC	App	Date 10/8/99
274	Drg. No. 0110 418	Sheet 1 OF 1	Rev. 0

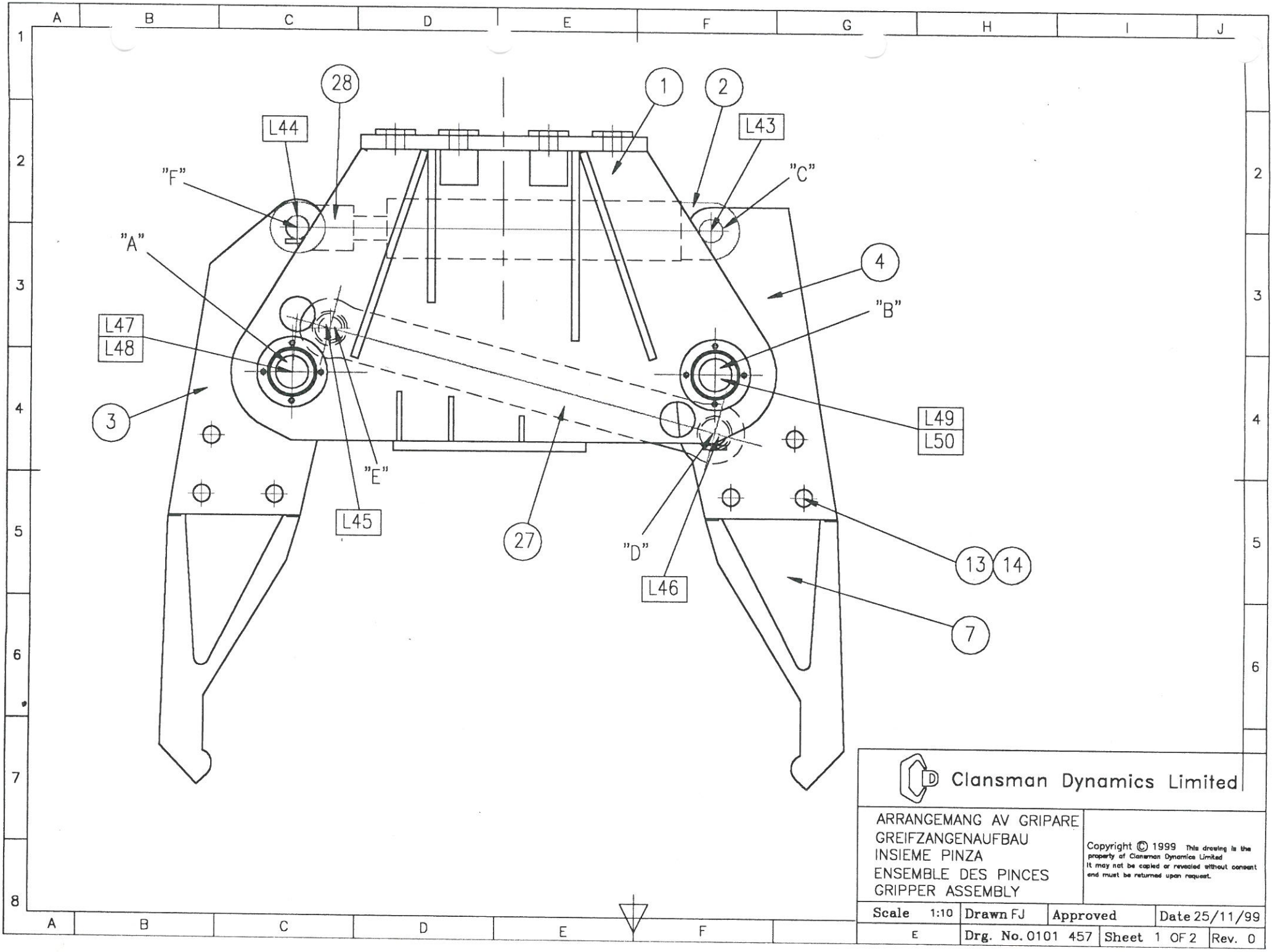
28
1
2
L44
L43
"F"
"C"
"A"
4
"B"
L47
L48
3
L49
L50
"E"
L45
27
"D"
13
14
L46
7
Clansman Dynamics Limited
ARRANGEMANG AV GRIPARE
GREIFZANGENAUFBAU
INSIEME PINZA
ENSEMBLE DES PINCES
GRIPPER ASSEMBLY
Copyright © 1999 This drawing is the property of Clansman Dynamics Limited It may not be copied or revealed without consent and must be returned upon request.
Scale 1:10
Drawn FJ
Approved
Date 25/11/99
E
Drg. No. 0101 457
Sheet 1 OF 2
Rev. 0

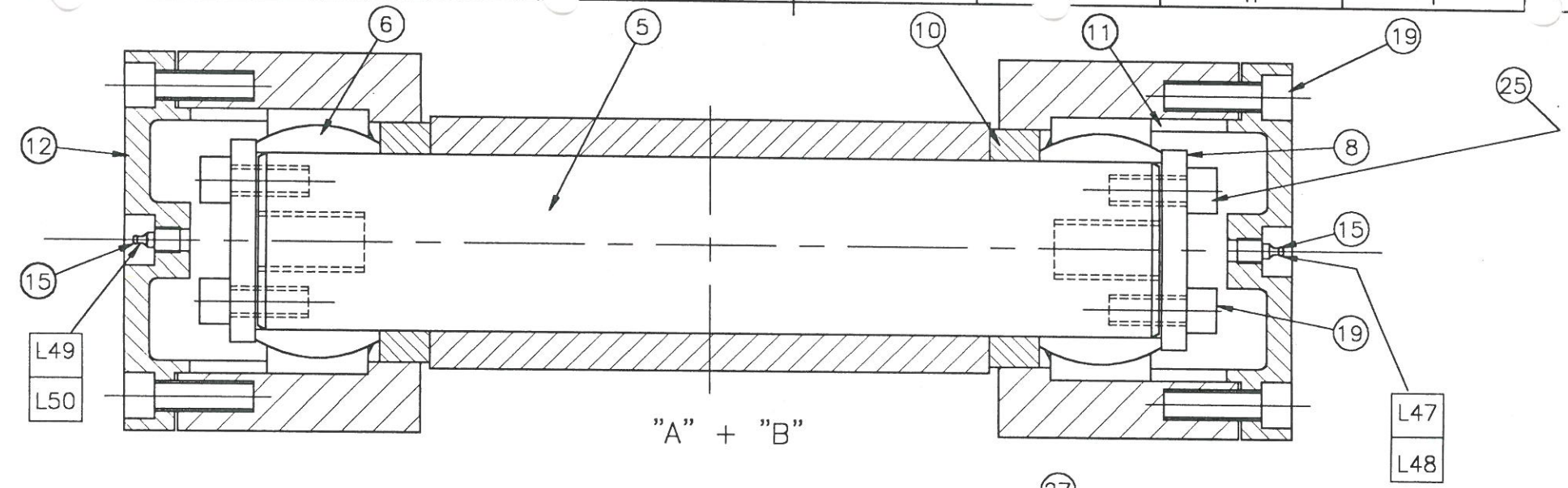

"A" + "B"

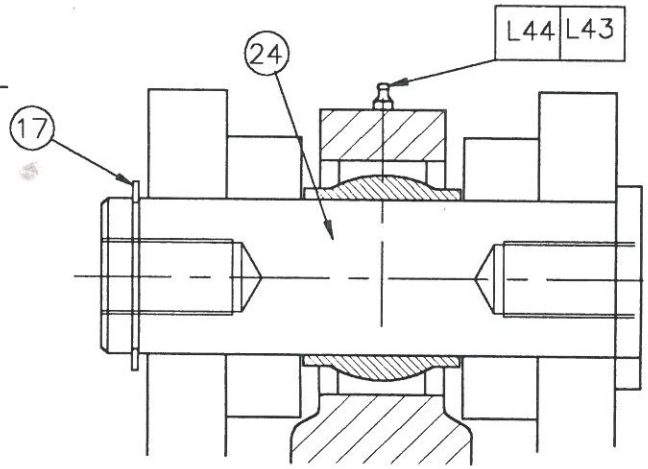

"F" + "C"

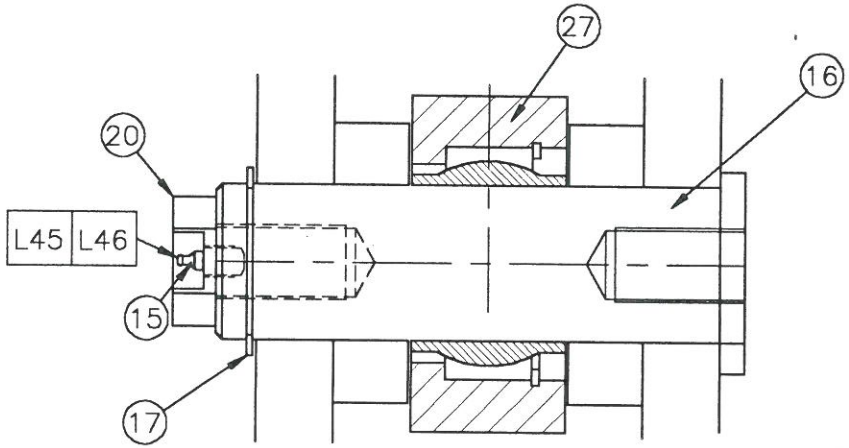

"D" + "E"

Clansman Dynamics Limited

ARRANGEMANG AV GRIPARE
GREIFZANGENAUFBAU
INSIEME PINZA
ENSEMBLE DES PINCES
GRIPPER ASSEMBLY

Scale NTS	Drawn FJ	Approved	Date 9/9/99
E	Drg. No. 0101 457	Sheet 2 OF 2	Rev. 0

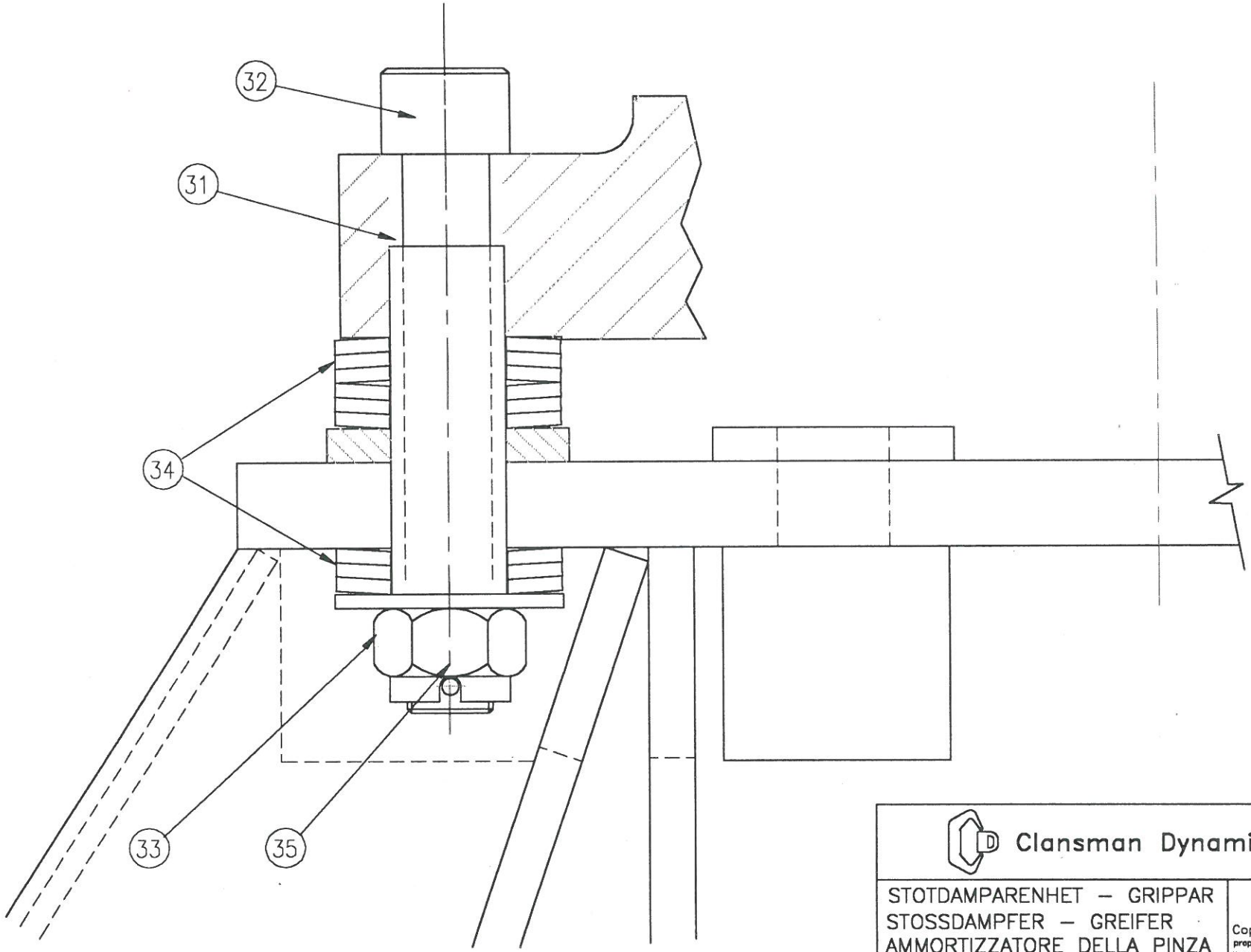

Clansman Dynamics Limited

STOTDAMPARENHET – GRIPPAR
STOSSDAMPFER – GREIFER
AMMORTIZZATORE DELLA PINZA
L'AMORTISSEURS DE LA PINCE
GRIPPER SPRING ASSEMBLY

Scale 1:2	Drawn FJ	Approved	Date 18/10/99
290	Drg. No. 0101444	Sheet 1 OF 1	Rev. 0

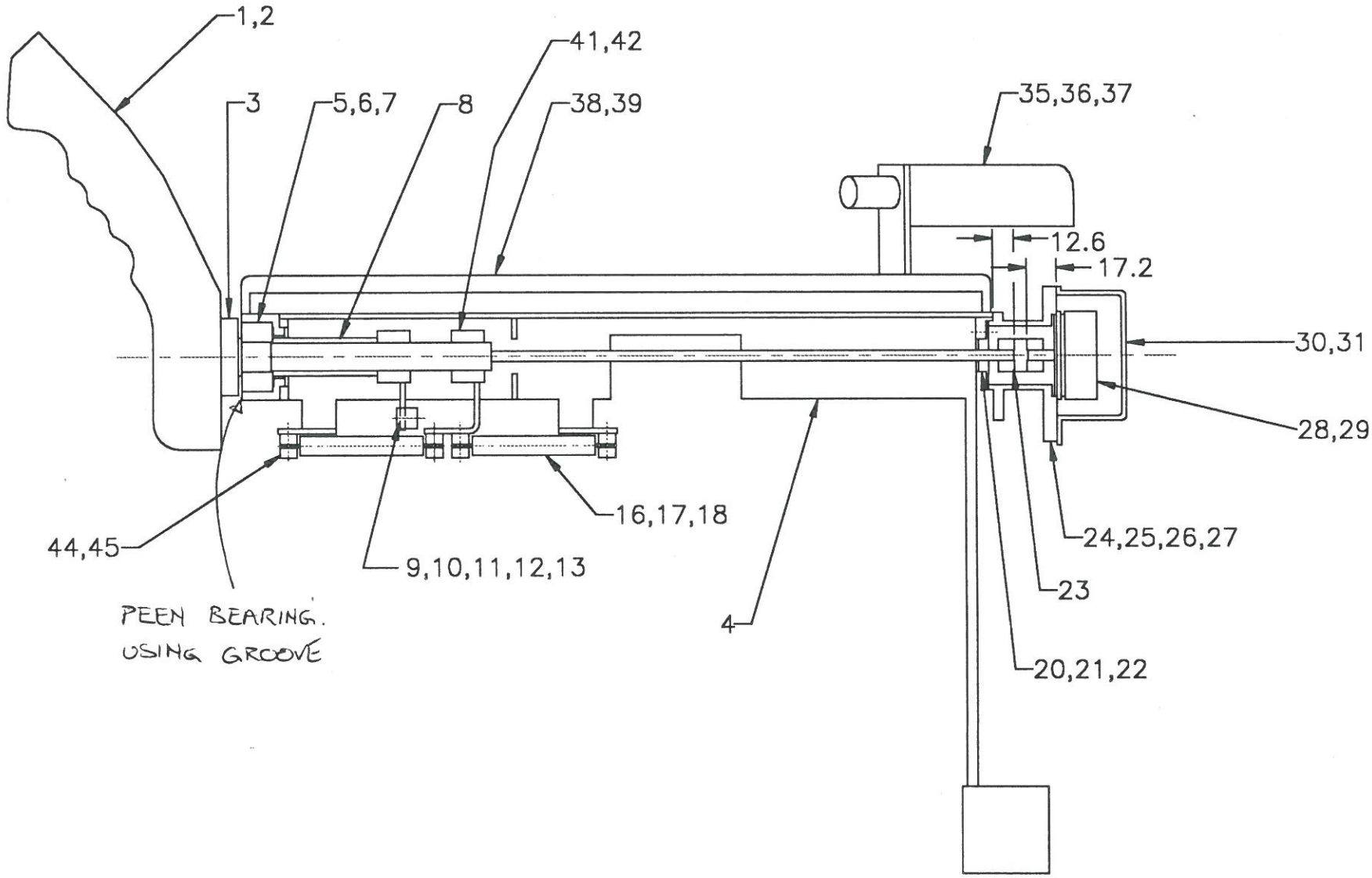

Clansman Dynamics Limited

TITLE ARRANGEMENT OF CONTROL ARM REST		Copyright © 1997 This drawing is the property of Clansman Dynamics Limited It may not be copied or revealed without consent and must be returned upon request.	
Scale NTS	Drawn RC	Approved	Date 3/7/97
20:\016	Drg. No. 0115 106	Sheet 1 OF 1	Rev. 0

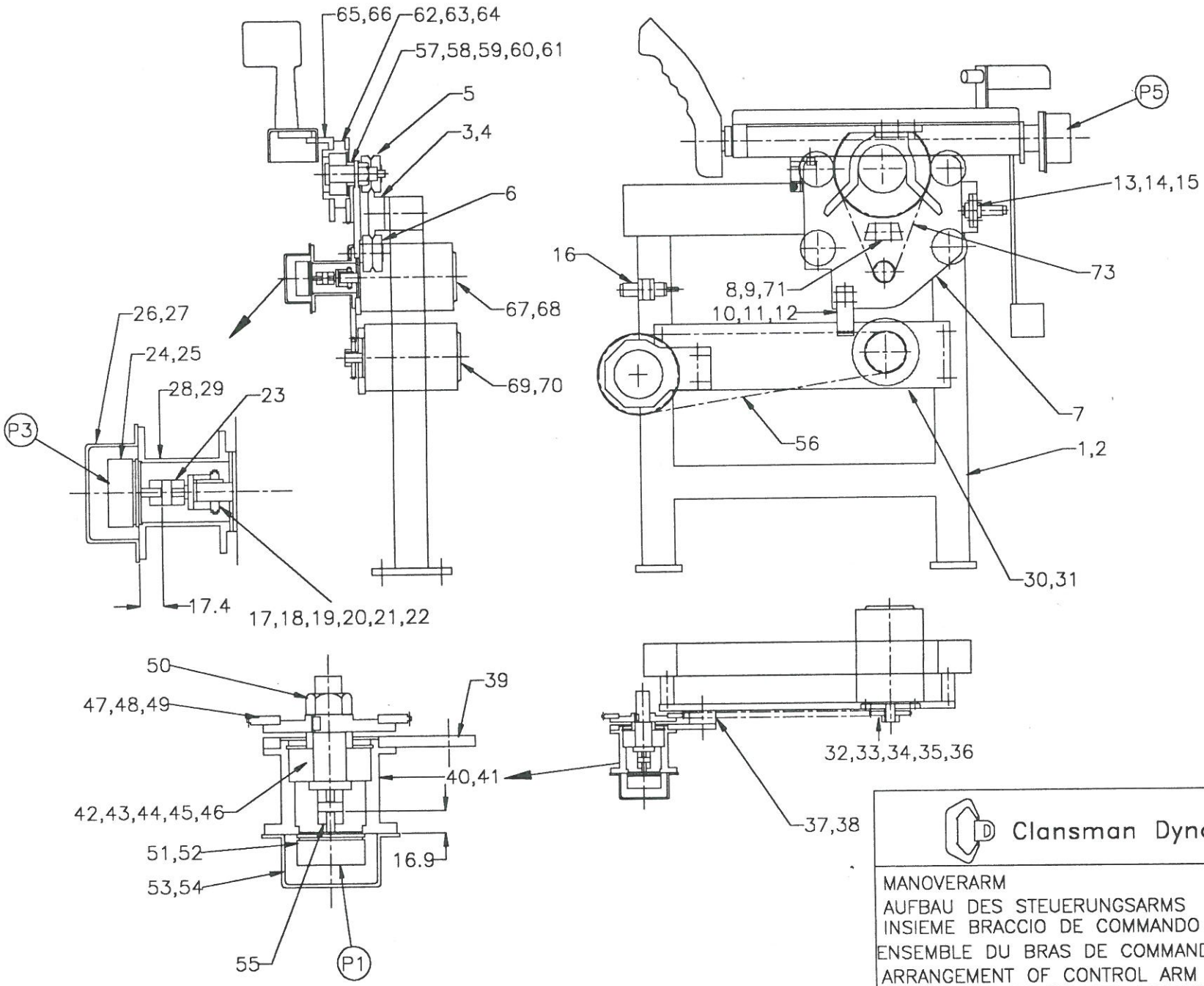

Clansman Dynamics Limited

MANOVERARM
AUFBAU DES STEUERUNGSARMS
INSIEME BRACCIO DE COMMANDO
ENSEMBLE DU BRAS DE COMMANDE
ARRANGEMENT OF CONTROL ARM

Scale NTS	Drawn RC	Approved	Date 10/1/95
23/009	Drg. No. 0115 085	Sheet 1 OF 1	Rev. 0

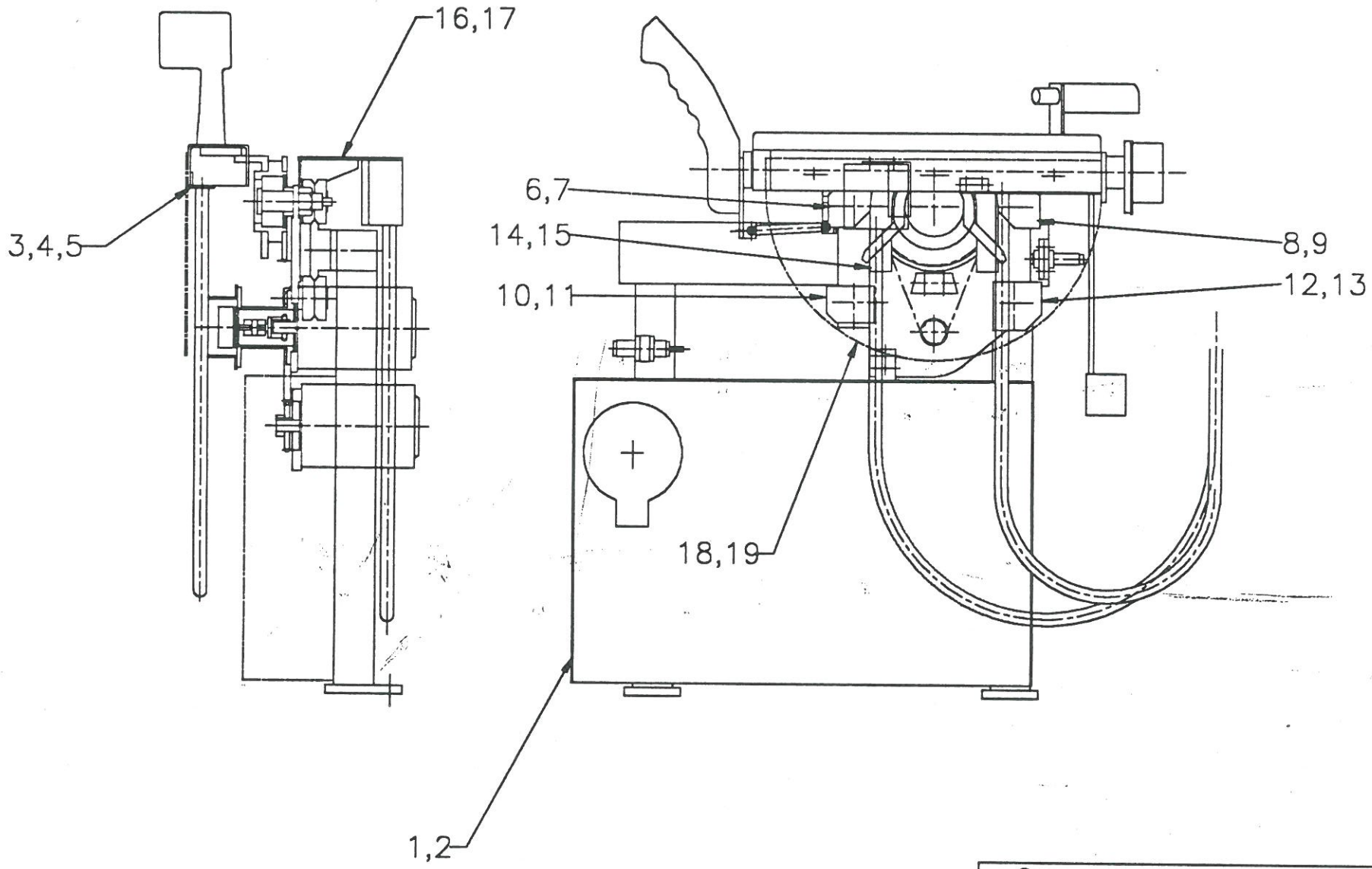

Clansman Dynamics Limited

TITLE
ARRANGEMENT OF COVERS ON CONTROL ARM

Scale NTS	Drawn RC	Approved	Date 5/2/95
29:\001	Drg. No. 0115 089	Sheet 1 OF 1	Rev. 0

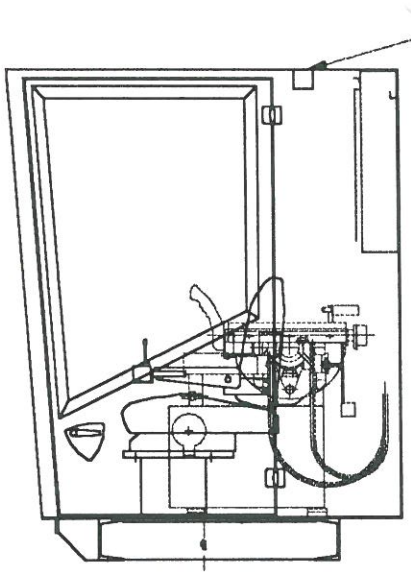

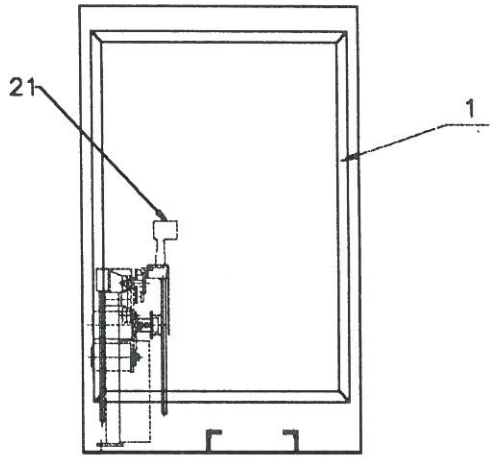

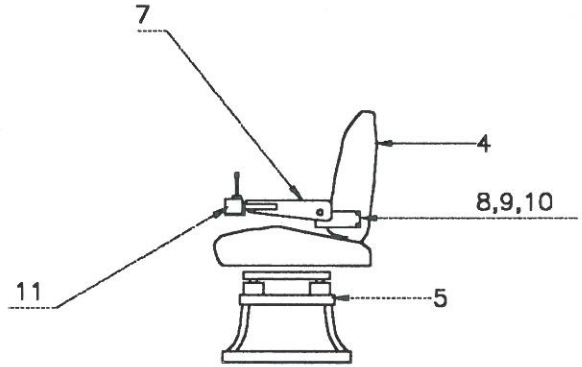

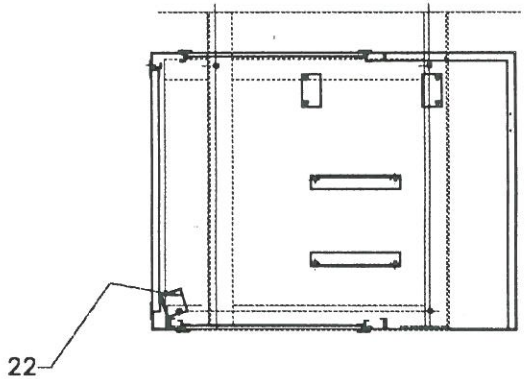

Clansman Dynamics Limited

KABIN
KABINENAUFBAU

ENSEMBLE DE LA CABINE
ARRANGEMENT OF CABIN

Scale NTS	Drawn RC	Approved	Date 9/9/97
159	Drg. No. 0114 033	Sheet 1 OF 1	Rev. 0

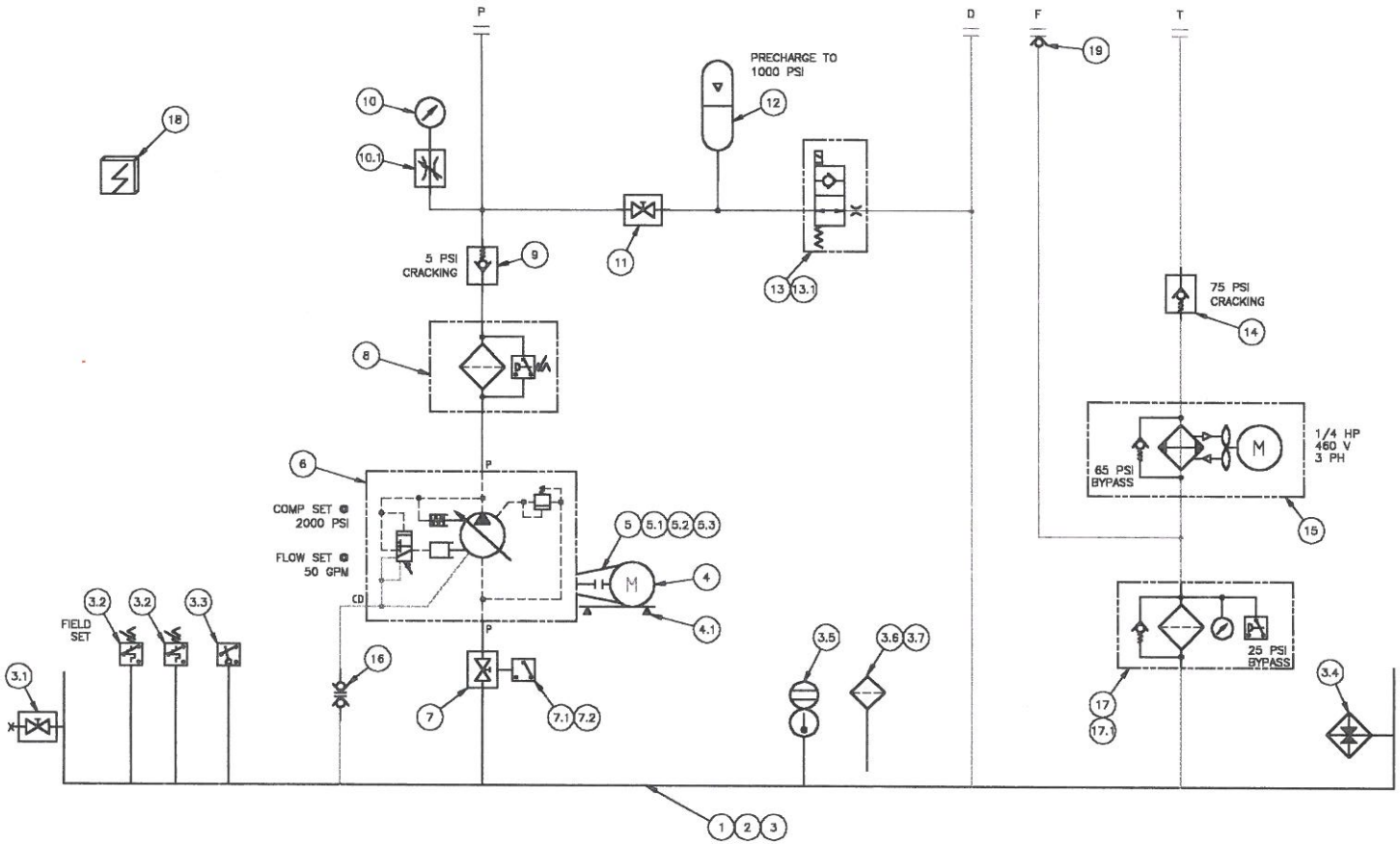

SYSTEM TAKE OFFS

ALL DIMENSIONS LOCATING CONNECTIONS ARE APPROXIMATE

P	PRESSURE, 1-5/8" SAE FITTED WITH MALE-MALE ADAPTOR TO 1-11/16 ORFS
T	RETURN, 1-5/8" SAE FITTED WITH MALE-MALE ADAPTOR TO 1-11/16 ORFS
D	DRAIN, 3/4" SAE FITTED WITH MALE-MALE ADAPTOR TO 13/16 ORFS
F	FILL, 3/4 QD

NOTES:
1. REFER TO SHEET 2 FOR THE GENERAL ARRANGEMENT.
2. REFER TO SHEET 3 FOR THE BILL OF MATERIALS.
3. PAINT RAL6000, GREEEN.

REV	DESCRIPTION	CHK'D	INT	DATE
C	DRAIN CORRECTION; ITEM 9 WAS 65 PSI		TLT	3-1-99
B	CUSTOMER CHANGES	DH	TLT	2-22-99
A	ORIGINAL ISSUE	DH	TLT	1-28-99

BERENDSEN

SHEETS 1 OF 3
DRAWN BY: TLT
FILE NAME: 6821C1H
CHECKED: DH

TITLE:
BERENDSEN UK
75 HP POWER UNIT
HYDRAULIC SCHEMATIC

DATE	SCALE	SIZE	TOLERANCE UNLESS NOTED (INCH / METRIC)	DRAWING NUMBER	REV
1-28-99	NTS	D	FRACTIONS ±1/32; 2 PLACE (.00) ±.010; 3 PLACE (.000) ±.005; ANGLE ±1°; 0 PLACES ±1mm; 1 PLACE ±.25mm; 2 PLACE ±.12mm; ANGLE ±1°	6821	C

DRAWING NUMBER 6821 REV C

SYSTEM TAKE OFFS

ALL DIMENSIONS LOCATING CONNECTIONS ARE APPROXIMATE

- (P) PRESSURE, 1-5/8" SAE FITTED WITH MALE-MALE ADAPTOR TO 1-11/16 ORFS
- (T) RETURN, 1-5/8" SAE FITTED WITH MALE-MALE ADAPTOR TO 1-11/16 ORFS
- (D) DRAIN, 3/4" SAE FITTED WITH MALE-MALE ADAPTOR TO 13/16 ORFS
- (F) FILL, 3/4 QD

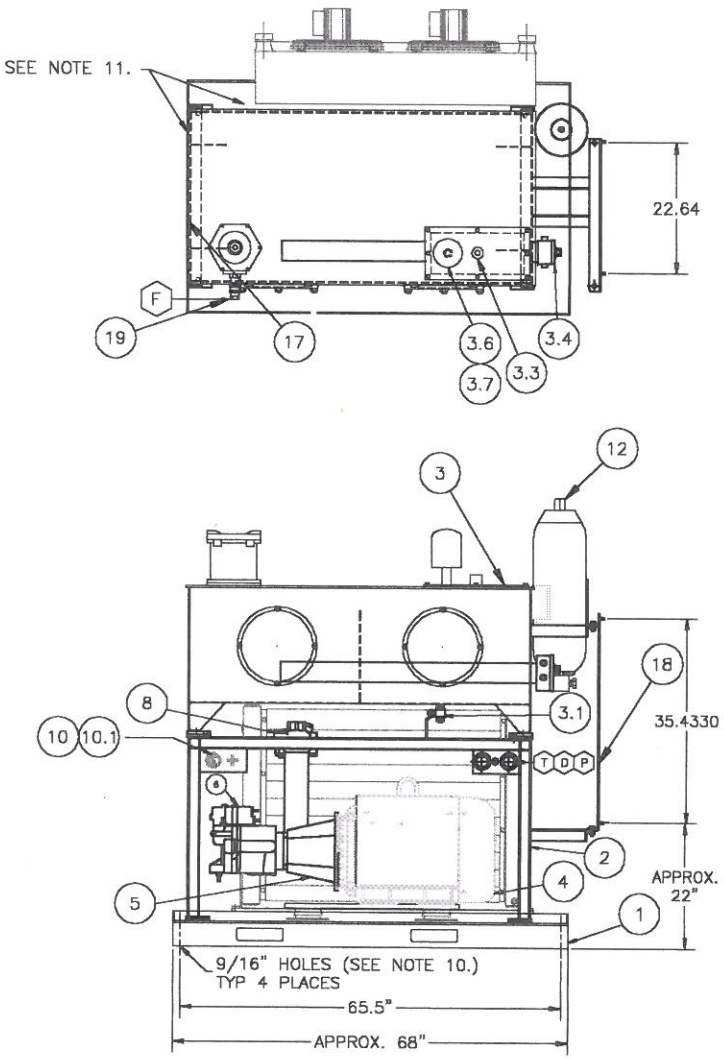

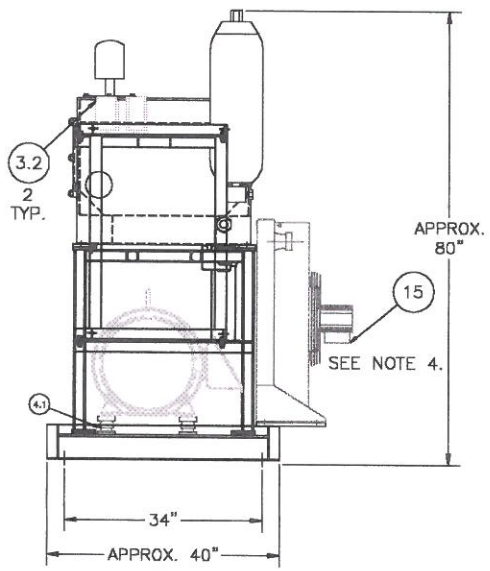

NOTES:
1. REFER TO SHEET 1 FOR THE HYDRAULIC SCHEMATIC.
2. REFER TO SHEET 3 FOR THE BILL OF MATERIALS.
3. PAINT RAL6000, GREEN.
4. MOUNT COOLER ON TOP OF RESERVOIR WITH FLEXIBLE MOUNTS.
5. ALL PIPING INSIDE RESERVOIR TO BE STAINLESS STEEL.
6. DRAIN LINES TO INCLUDE ANTI-SIPHON HOLE AT TOP.
7. NO PTFE TAPE TO BE USED.
8. ALL SHARP CORNERS TO BE ROUNDED.
9. ALL CUSTOMER CONNECTION PORTS TO BE FITTED WITH CAPS FOR SHIPMENT.
10. DRILL MOUNTING HOLES THROUGH TOP AND BOTTOM FLANGE OF DRIP PAN CHANNEL.
11. NO CUSTOMER CONNECTIONS ON THESE TWO SIDES OF UNIT.

REV	DESCRIPTION	CHK'D	INT	DATE
C	MOVE COOLER		TLT	3-1-99
B	MOVE COOLER	DH	TLT	2-15-99
A	ORIGINAL ISSUE	DH	TLT	1-27-99

BERENDSEN

SHEETS 2 OF 3
DRAWN BY: TLT
FILE NAME: 6821C2G
CHECKED: DH

TITLE:
BERENDSEN UK
75 HP POWER UNIT
GENERAL ARRANGEMENT

DATE	SCALE	SIZE	TOLERANCE UNLESS NOTED (INCH / METRIC)	DRAWING NUMBER	REV
1-27-99	NTS	D	FRACTIONS ±1/32; 2 PLACE (.00) ±0.010; 3 PLACE (.000) ±0.005; ANGLE ±1°; 0 PLACES ±1mm; 1 PLACE ±0.20mm; 2 PLACE ±0.12mm; ANGLE ±1°	6821	C

DRAWING NUMBER 6821 REV C

BILL OF MATERIALS				
ITEM	QTY	PART NUMBER	DESCRIPTION	SOURCE
1	1	DP-6821	DRIPPAN, CUSTOM	BFP
2	1	V-7211-T	OVERHEAD BASE, TOP SECTION, 120 & 130 GALLON RESERVOIR	VESCOR
3	1	VQ12111	RESERVOIR, 450 LITER CUSTOM, 304 SS	VESCOR
3.1	1	BV-12-N	BALL VALVE, 3/4" NPT, 2-WAY	BFP
3.2	2	837-A3J	SWITCH, TEMPERATURE, 25-125°F ADJUSTABLE RANGE	ALLEN-BRADLEY
3.3	1	35676	SWITCH, FLUID LEVEL	GEMS
3.4	1	790N01	HEATER, RESERVOIR	INDEECO
3.5	1	ALG-10T	GAUGE, FLUID LEVEL/TEMP	VESCOR
3.6	1	BFP3G10W3.0/RV	BREATHER, PRESSURIZED	HYCON
3.7	1	BLBN160S2W2.0	BREATHER, 3 MICRON	HYCON
4	1	SF4P75TC61Y	MOTOR, ELECTRIC, EPACT, 75 HP, 1800 RPM, 365TC, TEFC, 3/60/230/460	LINCOLN ELECTRIC
4.1	4	17/1609/1-65	ISOLATION MOUNT, ELECTRIC MOTOR	METALASTIK
5	1	M324872C	ADAPTER, PUMP/MOTOR	MAGNALOY
5.1	1	M60011612	COUPLING, MODEL 600, 1-1/2" BORE X 3/8" KEYWAY	MAGNALOY
5.2	1	M60021220	COUPLING, MODEL 600, 2-3/8" BORE X 5/8" KEYWAY	MAGNALOY
5.3	1	M670N7	COUPLING INSERT, MODEL 600, NEOPRENE	MAGNALOY
6	1	PVH131QIC-RSF-13S-10-C25-31	PUMP, PISTON, 131CC, PRESSURE COMP	VICKERS
7	1	BVAL-2500S-4321	BALL VALVE, 2 1/2" SAE	DMIC
7.1	1	BVAL-LSB1-2500S-4321	SWITCH BRACKET, 2" BALL VALVE	DMIC
7.2	1	DM10166	SWITCH, LIMIT	DMIC
8	1	H6204C1TH1B4H10	FILTER, PRESSURE, 10 MICRON, ELECTRICAL INDICATOR	VICKERS
9	1	DS8P1-10-05-11	CHECK VALVE, IN-LINE, 1 1/4" SAE, 5 PSI CRACKING	VICKERS
10	1	PGL-A-63-N-B-3000-P	GAUGE, PRESSURE, PANEL MOUNT, 0-3000 PSI	BFP
10.1	1	GI-290-N	GAUGE SHUT-OFF VALVE, IN-LINE	BFP
11	1	HBV-24S-LD-3	BALL VALVE, HP, 1-1/2" SAE, 2-WAY, W/LOCK	BFP
12	1	B5-100-6	ACCUMULATOR, 5 GALLON, BLADDER, STRAIGHT THREAD	BFP
13	1	SV3-10-0-6T-115AG	ACCUMULATOR DUMP VALVE, ELECTRICAL, 115VAC	VICKERS NOTES:
13.1	1	21821/060	ORIFICE DISK	VICKERS
14	1	CVH75-1500S	CHECK VALVE, IN-LINE, 1 1/2" SAE, 75 PSI CRACKING	DMIC
15	1	AOC-57-1-60-460V/3PH	HEAT EXCHANGER, AIR/OIL, W/BYPASS	THERMAL TRANSFER
16	1	5606-12-12S	COUPLING SET, 3/4" SAE	AEROQUIP
17	1	TI300K2JHVB	FILTER, RETURN, VISUAL INDICATOR, 25 PSI BYPASS	BFP
17.1	1	ED-P-2	FILTER PRESSURE INDICATOR, ELECTRICAL	BFP
18	1	EPF-6821	ELECTRICAL PANEL FRAME, CUSTOM	BFP
19	1	SM-501-8FO	QUICK DISCONNECT	PARKER

1. REFER TO SHEET 1 FOR THE HYDRAULIC SCHEMATIC.
2. REFER TO SHEET 2 FOR THE GENERAL ARRANGEMENT.

REV	DESCRIPTION	CHK'D	INT	DATE
C	ITEM 9 WAS DS8P1-10-65-11		TLT	3-1-99
B	CUSTOMER CHANGES	DH	TLT	2-15-99
A	ORIGINAL ISSUE	DH	TLT	1-28-99

BERENDSEN

SHEETS 3 OF 3
DRAWN BY: TLT
FILE NAME: 6821C3B
CHECKED: DH

TITLE:
BERENDSEN UK
75 HP POWER UNIT
BILL OF MATERIALS

DATE	SCALE	SIZE	TOLERANCE UNLESS NOTED (INCH / METRIC)	DRAWING NUMBER	REV
1-28-99	NTS	D	FRACTIONS ±1/32; 2 PLACE (.00) ±.010; 3 PLACE (.000) ±.005; ANGLE ±1°; 0 PLACES ±1mm; 1 PLACE ±.25mm; 2 PLACE ±.12mm; ANGLE ±1°	6821	C

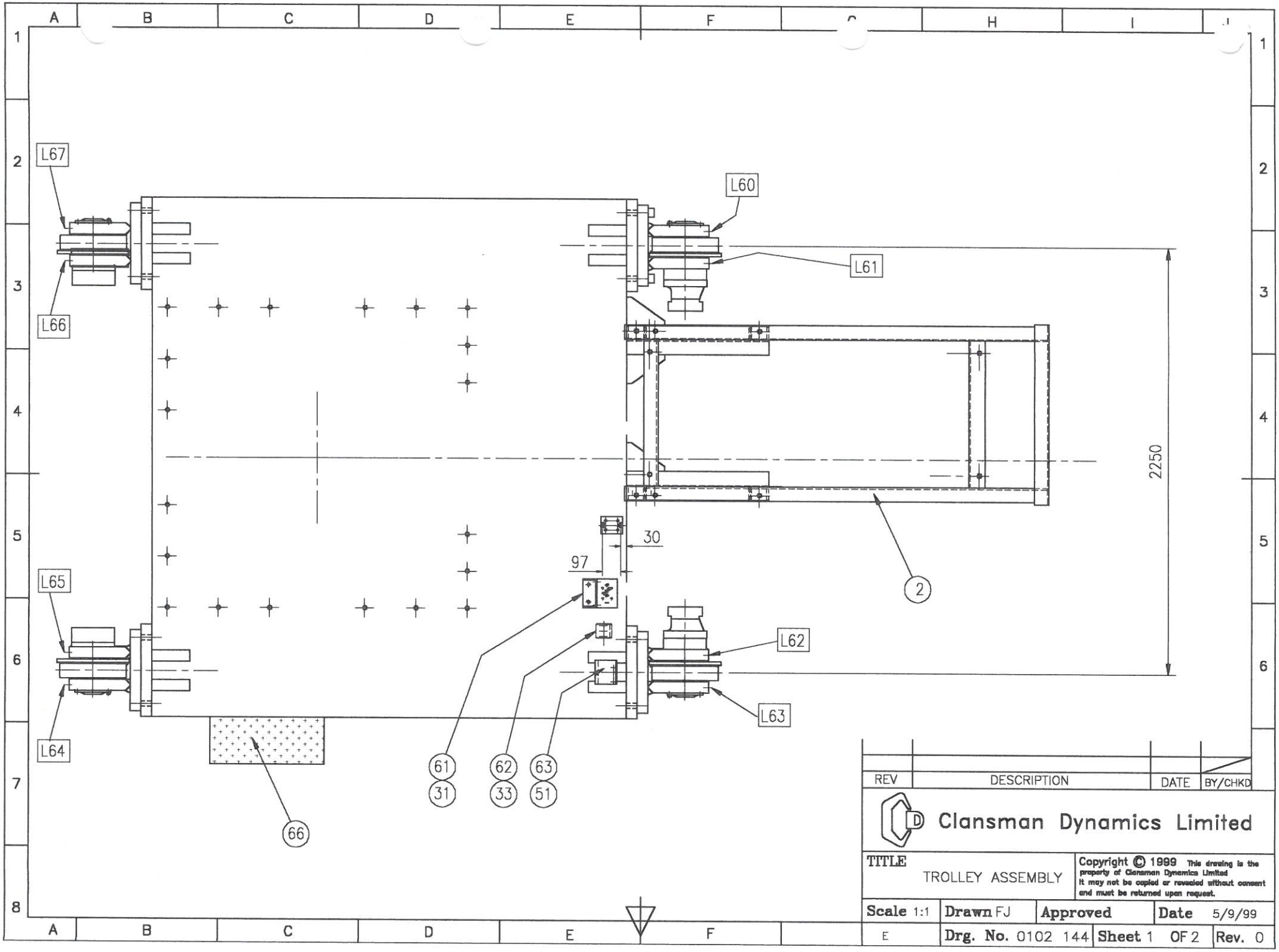

REV	DESCRIPTION	DATE	BY/CHKD

Clansman Dynamics Limited

TITLE
TROLLEY ASSEMBLY

Scale 1:1	Drawn FJ	Approved	Date 5/9/99
E	Drg. No. 0102 144	Sheet 1 OF 2	Rev. 0

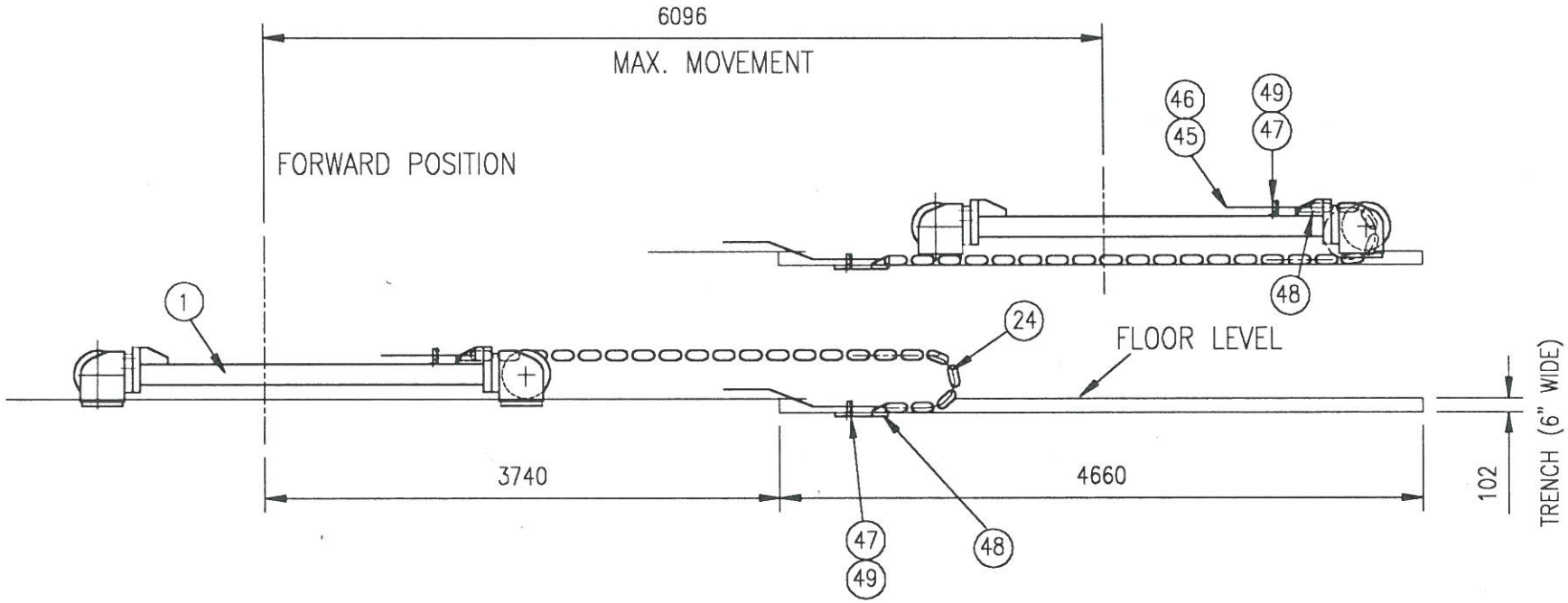

REV	DESCRIPTION	DATE	BY/CHKD

Clansman Dynamics Limited

TITLE	ASSEMBLY OF DRAG CHAIN	Copyright © 1999 This drawing is the property of Clansman Dynamics Limited It may not be copied or revealed without consent and must be returned upon request.		
Scale 1:50	Drawn FJ	Approved	Date 16/2/99	
240	Drg. No. 0102 144	Sheet 2 OF 2	Rev. 0	

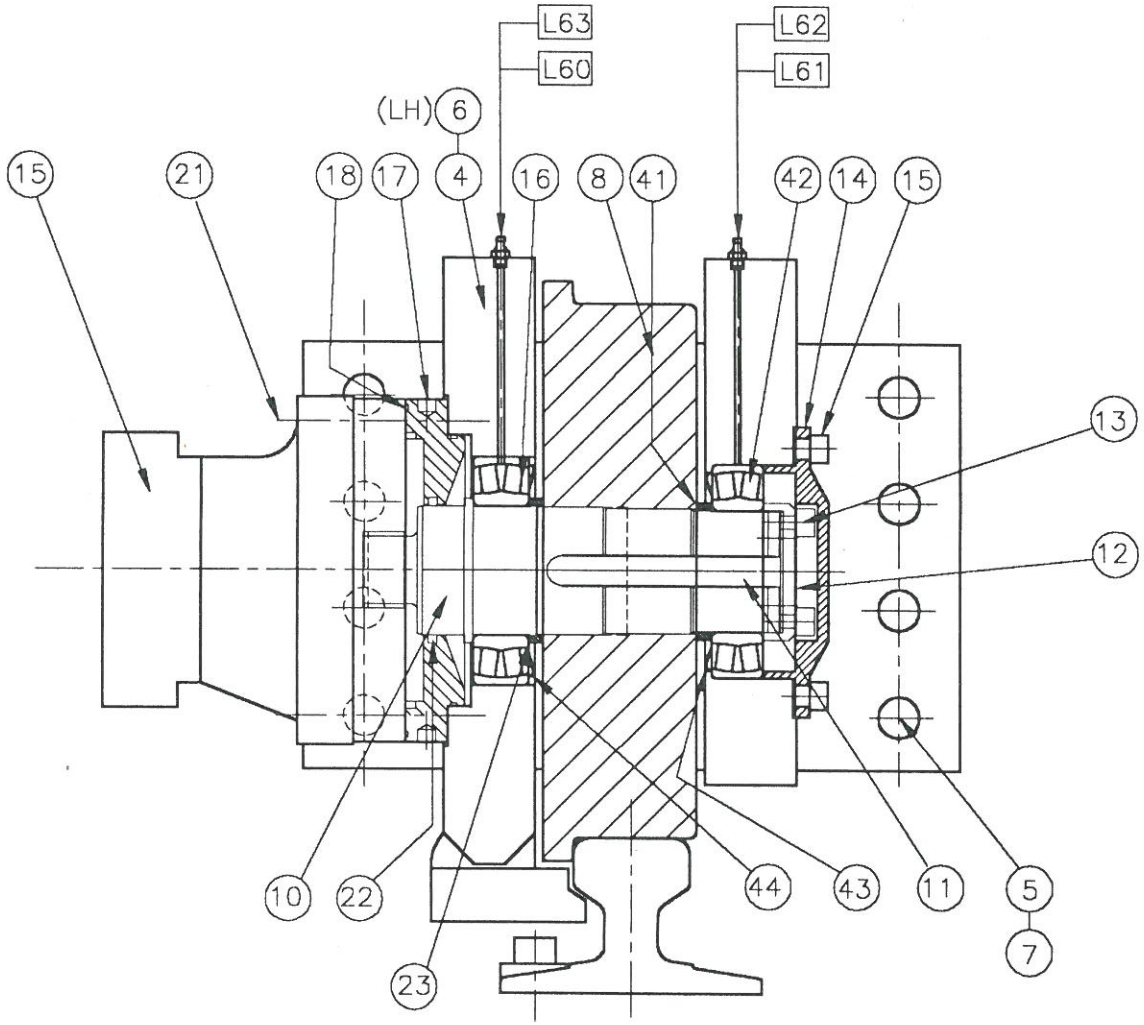

REV	DESCRIPTION	DATE	BY/CHKD

Clansman Dynamics Limited

TITLE ARRGT. OF TROLLEY WHEEL (DRIVER)

Scale 1:5	Drawn FJ	Approved	Date 15/1/99
233	Drg. No.0102 194	Sheet 1 OF 1	Rev. 0

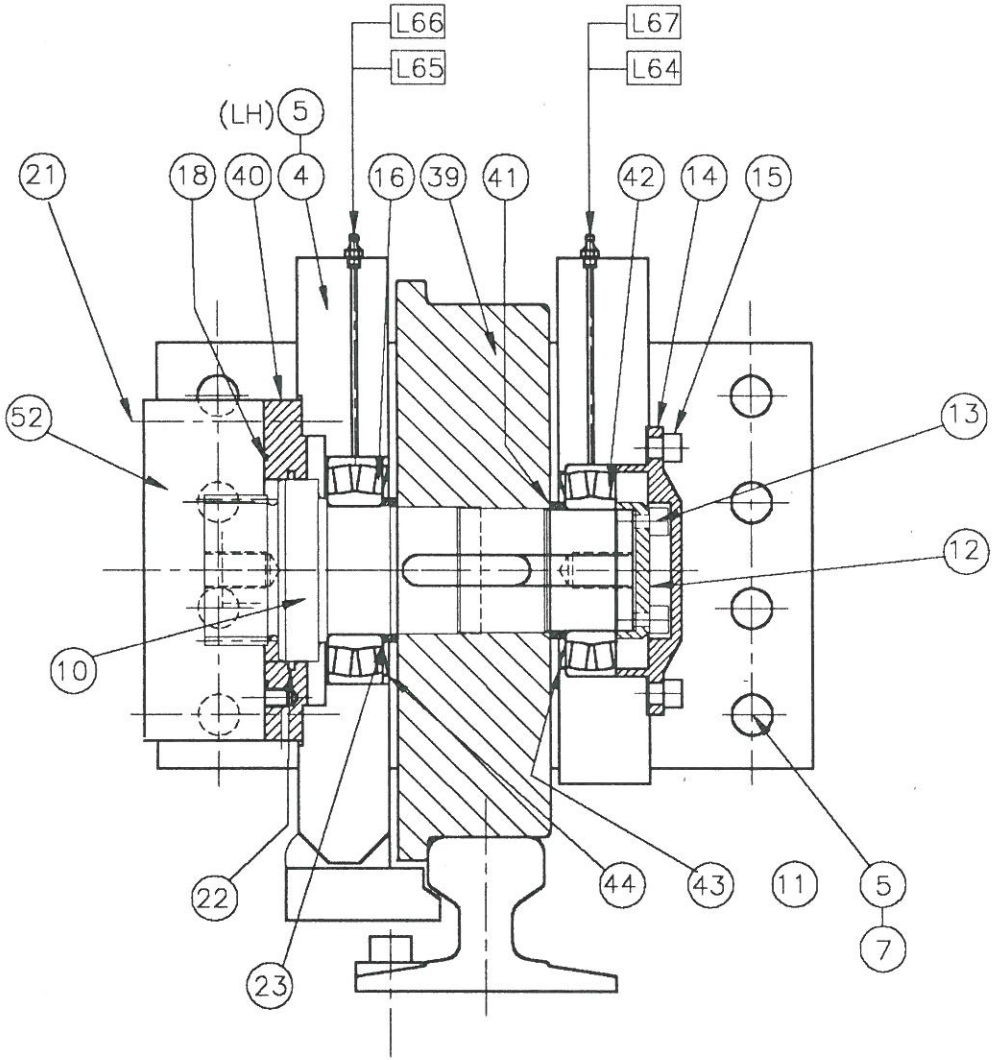

REV	DESCRIPTION	DATE	BY/CHKD

Clansman Dynamics Limited

TITLE ARRGT. OF TROLLEY WHEEL (BRAKED)

Scale 1:5	Drawn FJ	Approved	Date 15/1/99
280	Drg. No.0102 203	Sheet 1 OF 1	Rev. 0

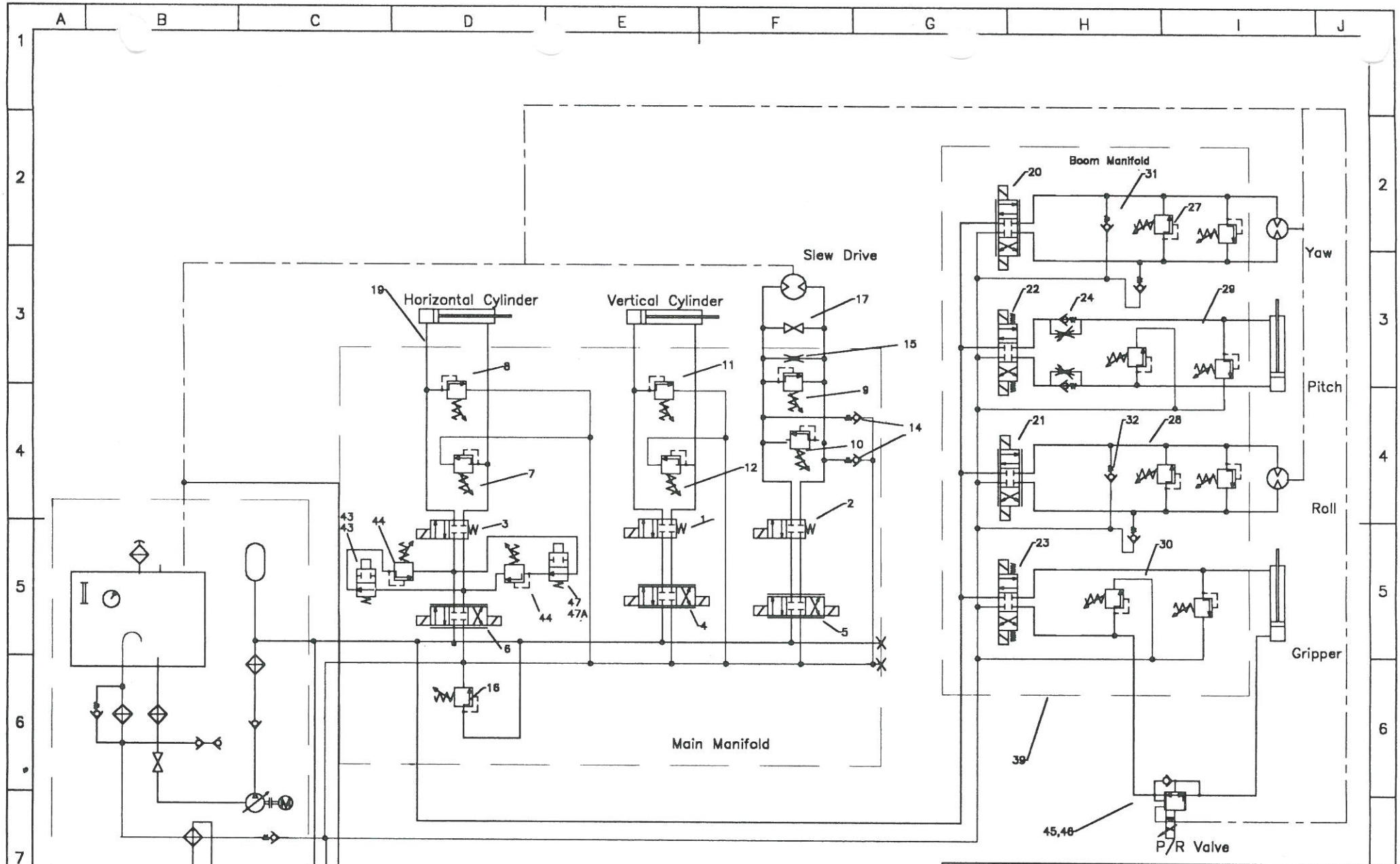

Clansman Dynamics Limited

TITLE MANIPULATOR HYDRAULIC CIRCUIT		Copyright © 1998 This drawing is the property of Clansman Dynamics Limited It may not be copied or revealed without consent and must be returned upon request.	
Scale NTS	Drawn EW	Approved	Date 07/09/99
e:\dwg	Drg. No.0316 286	Sheet 1 OF 1	Rev. 1

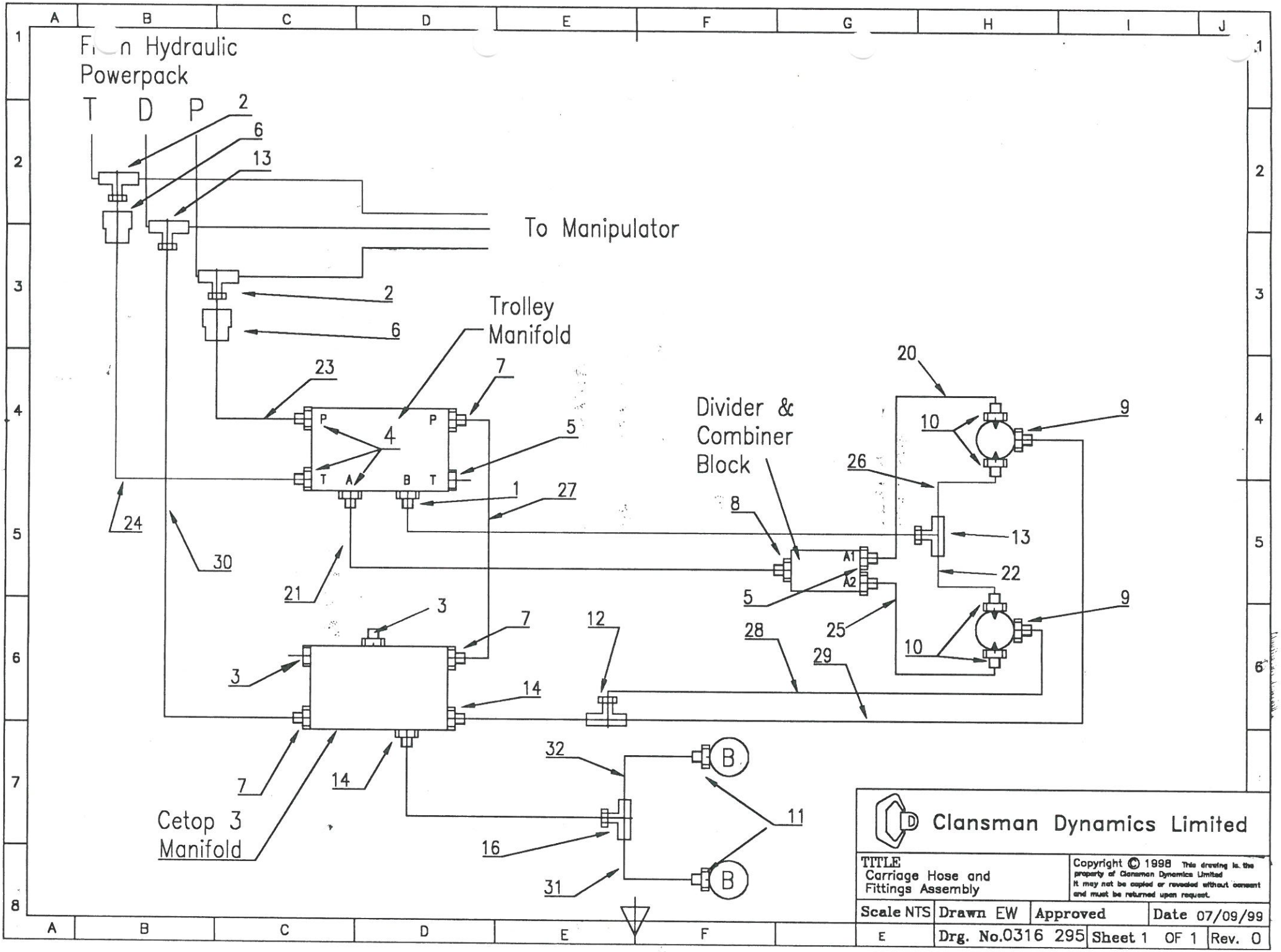
From Hydraulic Powerpack
T D P
To Manipulator
Trolley Manifold
Divider & Combiner Block
Cetop 3 Manifold
P
T
A
B
A1
A2
Clansman Dynamics Limited
TITLE
Carriage Hose and Fittings Assembly
Copyright © 1998 This drawing is the property of Clansman Dynamics Limited It may not be copied or revealed without consent and must be returned upon request.
Scale NTS
Drawn EW
Approved
Date 07/09/99
E
Drg. No.0316 295
Sheet 1 OF 1
Rev. 0

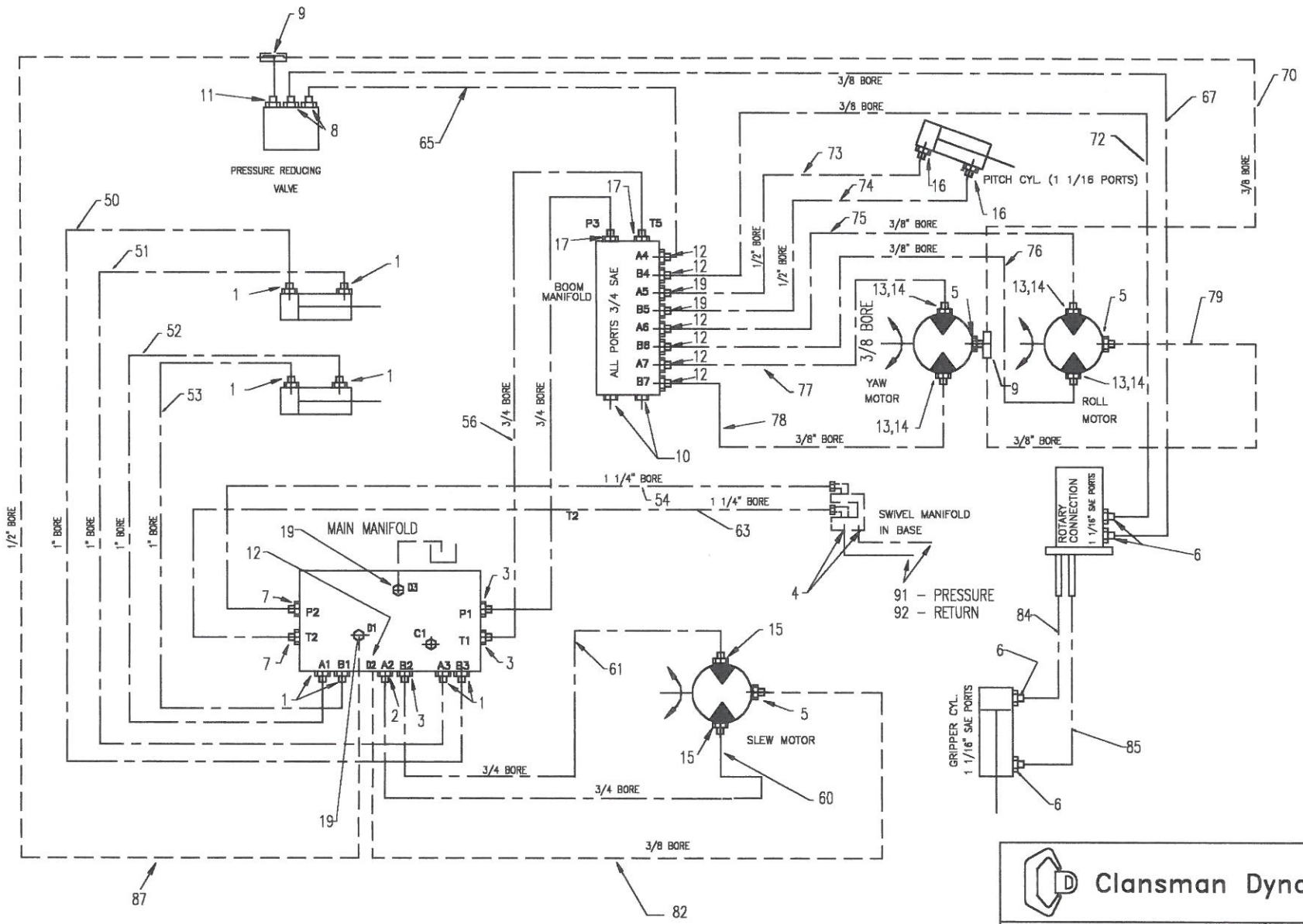

Clansman Dynamics Limited

TITLE
HOSE & FITTINGS ASSEMBLY

Rev	By/date	Details
1	FJ 1/99	Updated

Scale NTS	Drawn JW	Approved FED	Date 8/10/97
E	Drg. No. 0316 296	Sheet 1 OF 1	Rev. 1

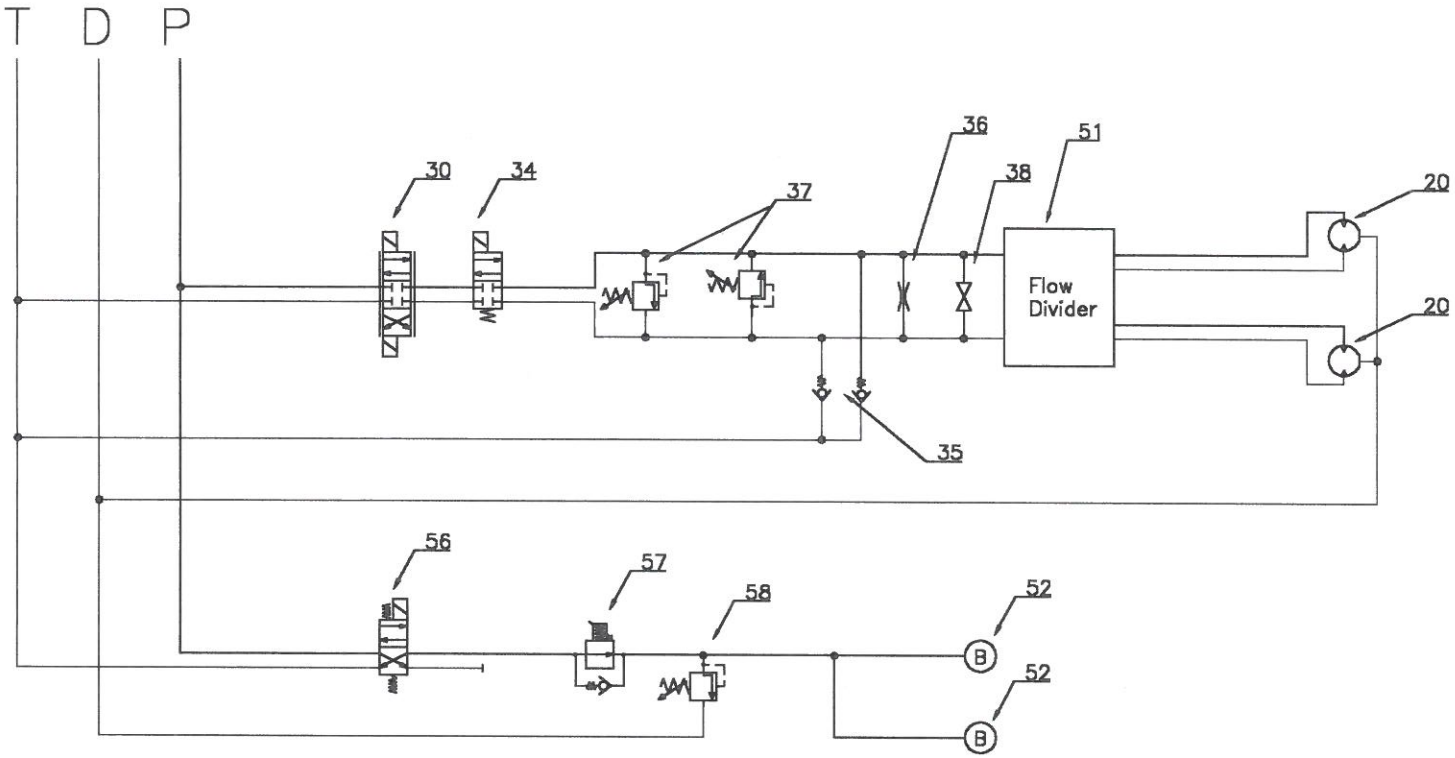

Clansman Dynamics Limited

TITLE
CARRIAGE
HYDRAULIC CIRCUIT

Scale NTS	Drawn EW	Approved	Date 07/09/99
282	Drg. No.0316 287	Sheet 1 OF 1	Rev. 0

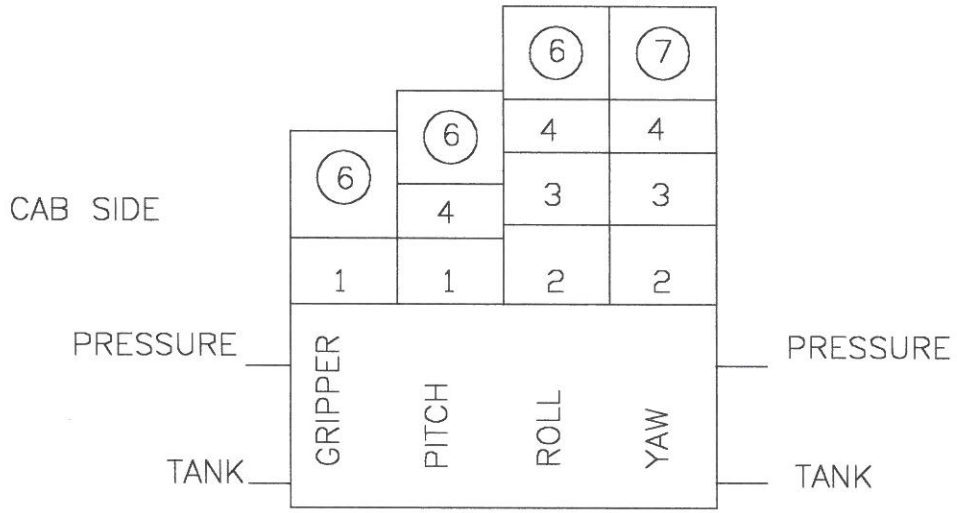

1. X–LINE RELIEF VALVE (A & B TO TANK)
2. X–LINE RELIEF VALVE (A TO B & B TO A)
3. CHECK VALVE
4. FLOW CONTROL VALVE
6. DIRECTIONAL CONTROL VALVE
7. SLUG SPOOL DIRECTIONAL CONTROL VALVE

Clansman Dynamics Limited

TITLE BOOM MANIFOLD		Copyright © 1996 This drawing is the property of Clansman Dynamics Limited it may not be copied or revealed without consent and must be returned upon request.	
Scale NTS	Drawn RC	Approved	Date 13/8/96
116/010	Drg. No. 0116 157	Sheet 1 OF 1	Rev. 0

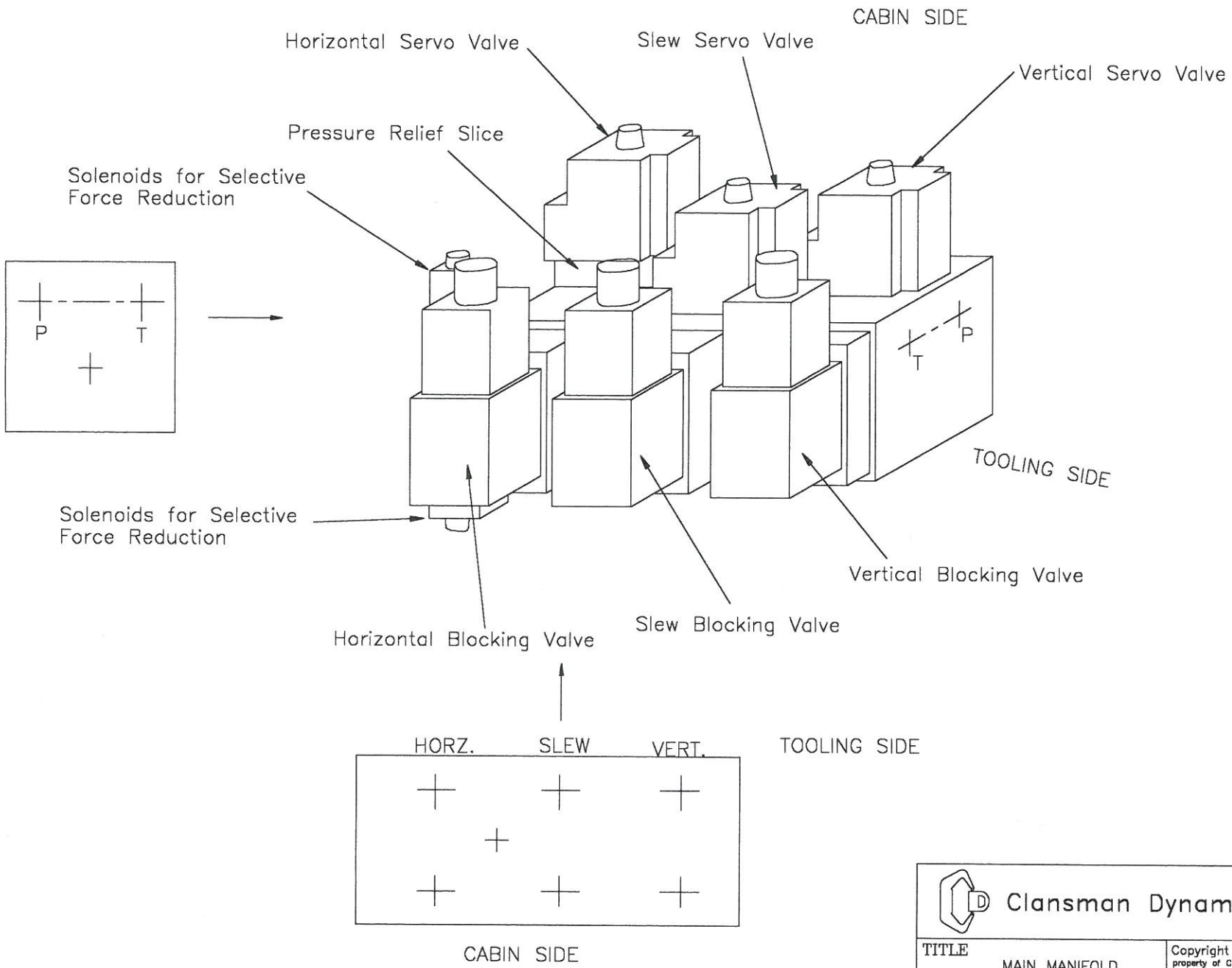

Clansman Dynamics Limited

TITLE MAIN MANIFOLD		Copyright © 1998 This drawing is the property of Clansman Dynamics Limited It may not be copied or revealed without consent and must be returned upon request.	
Scale NTS	Drawn RC	App	Date 8/9/98
211	Drg. No. 0316 208	Sheet 1 OF 1	Rev. 0

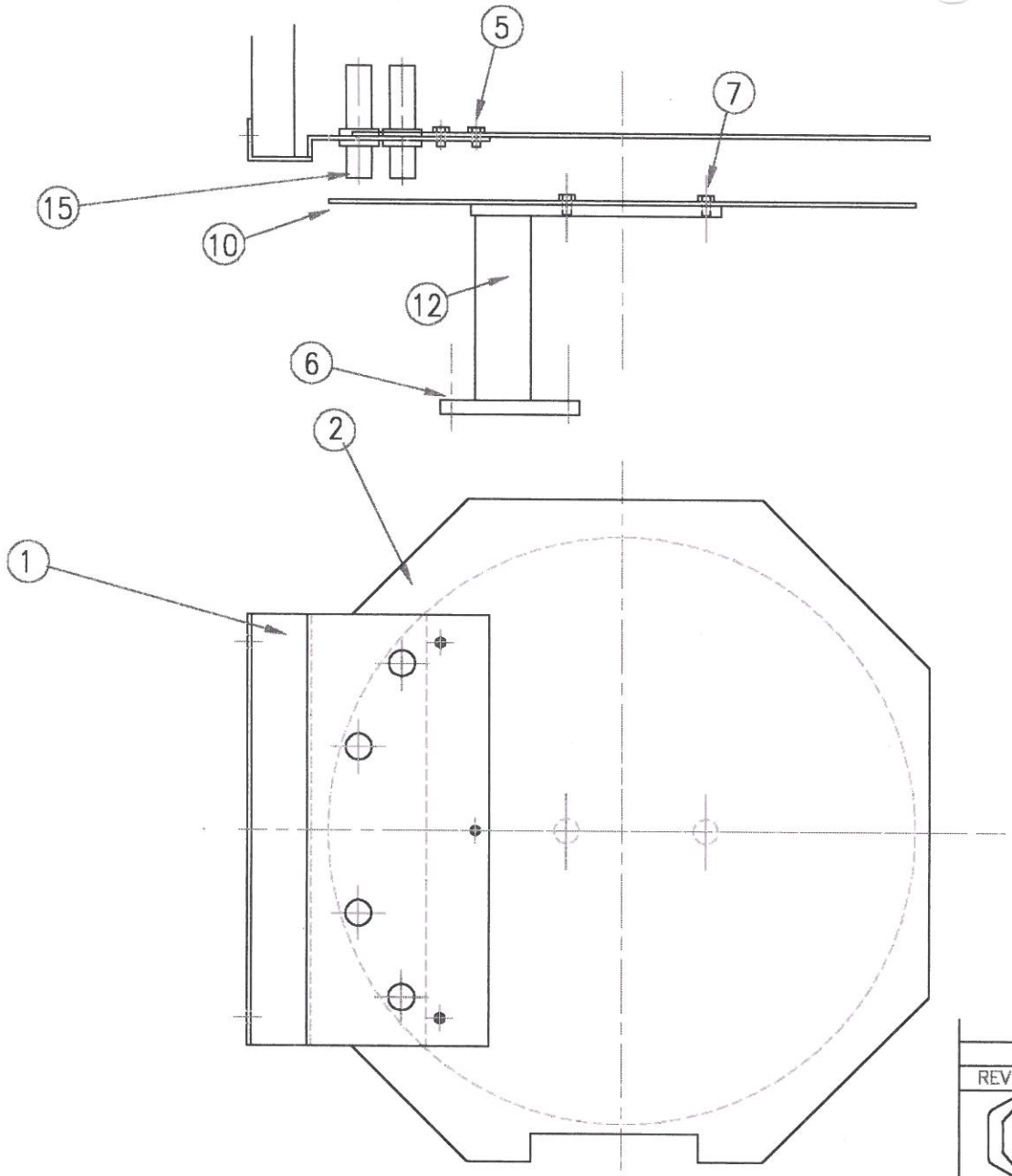

REV	DESCRIPTION	DATE	BY/CHKD

Clansman Dynamics Limited

TITLE ASSEMBLY OF SLEW SWITCHES

Scale 1/5	Drawn FJ	Approved	Date 6/1/00
E	Drg. No.0102 226	Sheet 1 OF 1	Rev. 0

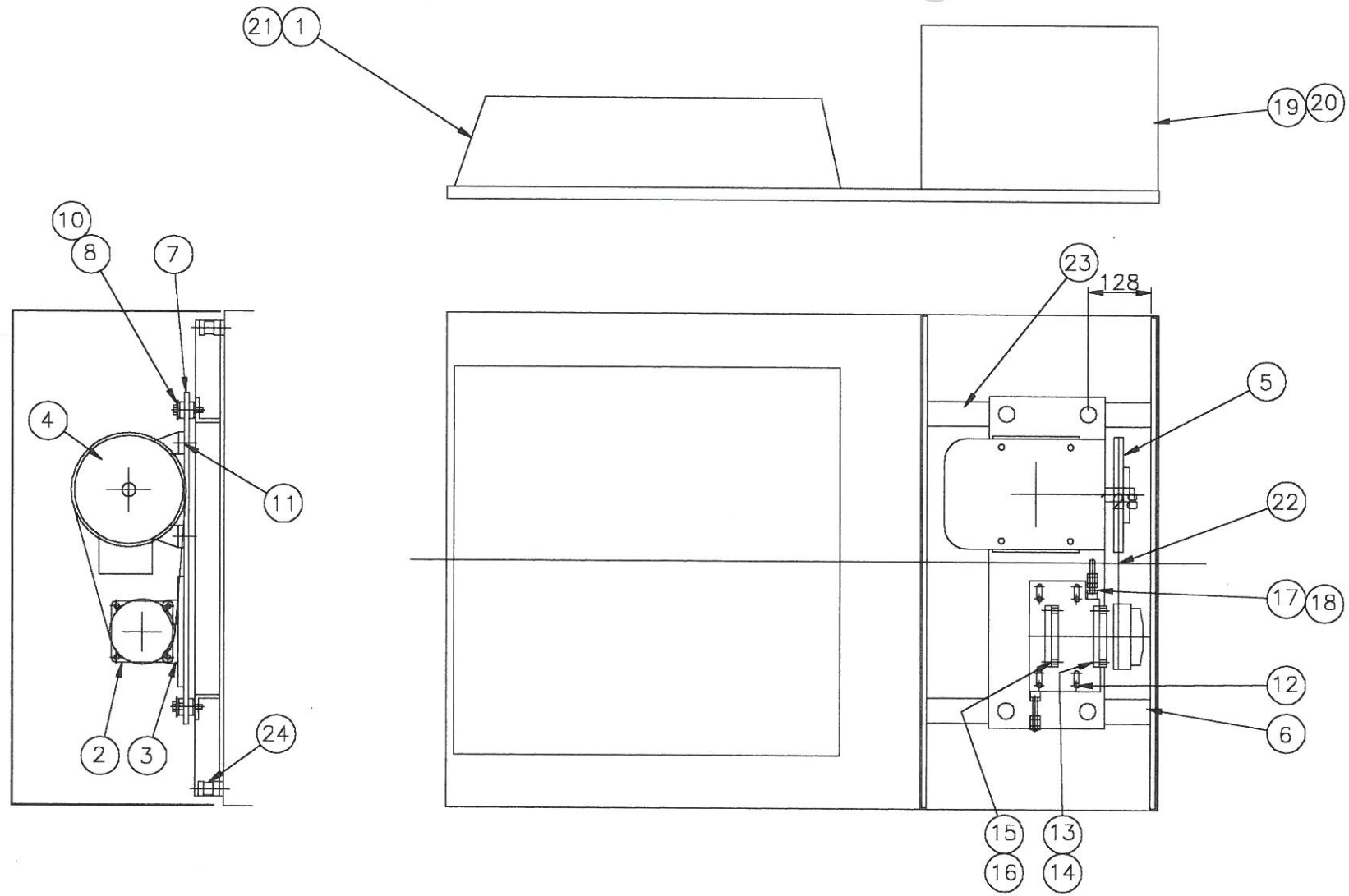

Clansman Dynamics Limited

LAYOUT LUFTKONDIOTIORING
AUFBAU DER KLIMAANLAGE

ENSEMBLE DE LA CLIMATISATION
ARRGT OF AIR CONDITIONING

Scale NTS	Drawn RC	Approved	Date 7/10/96
118/012	Drg. No.0114 025	Sheet 1 OF 1	Rev. 1

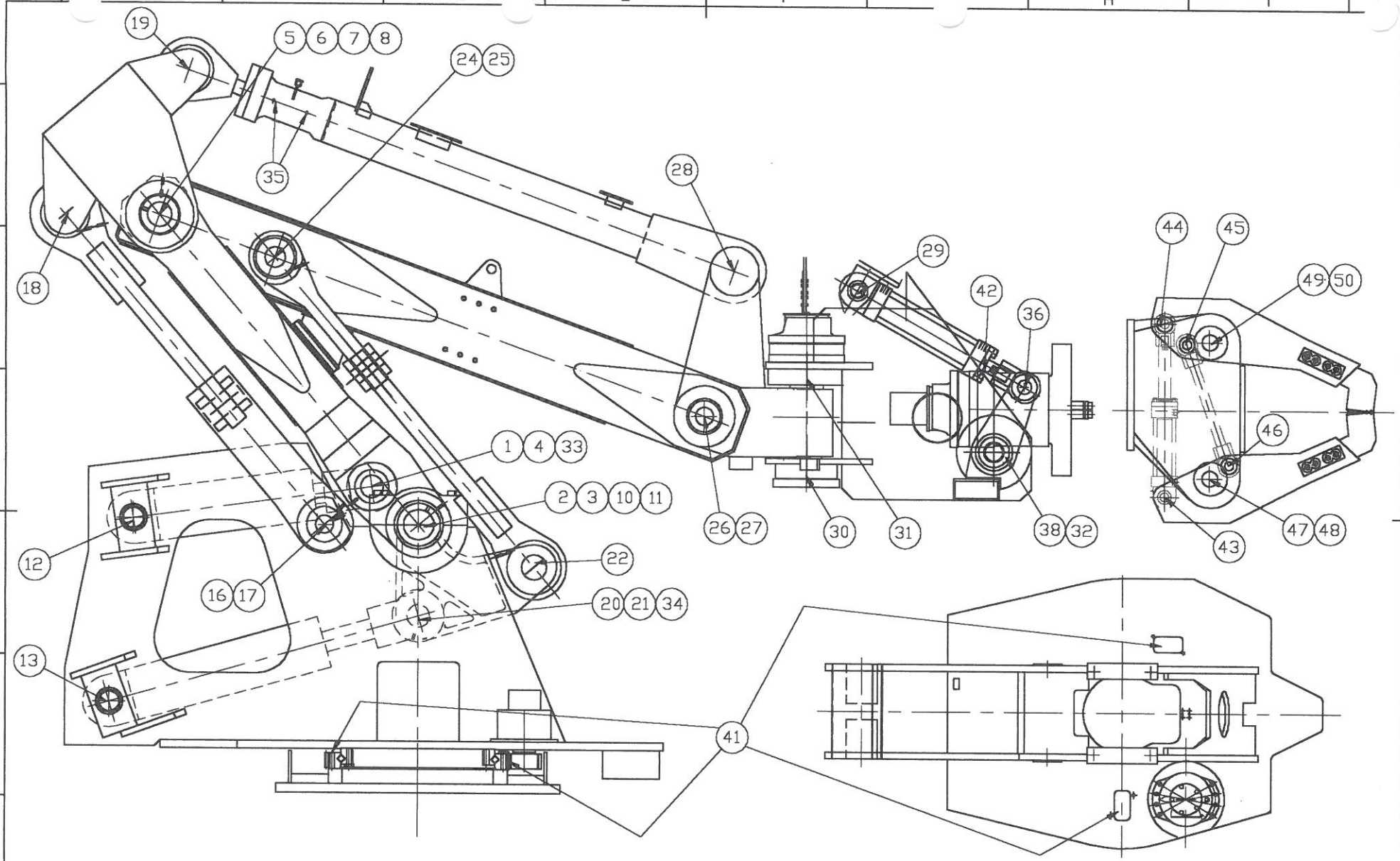

Clansman Dynamics Limited

TITLE DRAWING SHOWING LUBRICATION POINTS	Copyright © 2000 This drawing is the property of Clansman Dynamics Limited It may not be copied or revealed without consent and must be returned upon request.		
Scale NTS	Drawn RC	Approved	Date 10/1/00
E	Drg. No. 0103 878	Sheet 1 OF 1	Rev. 0

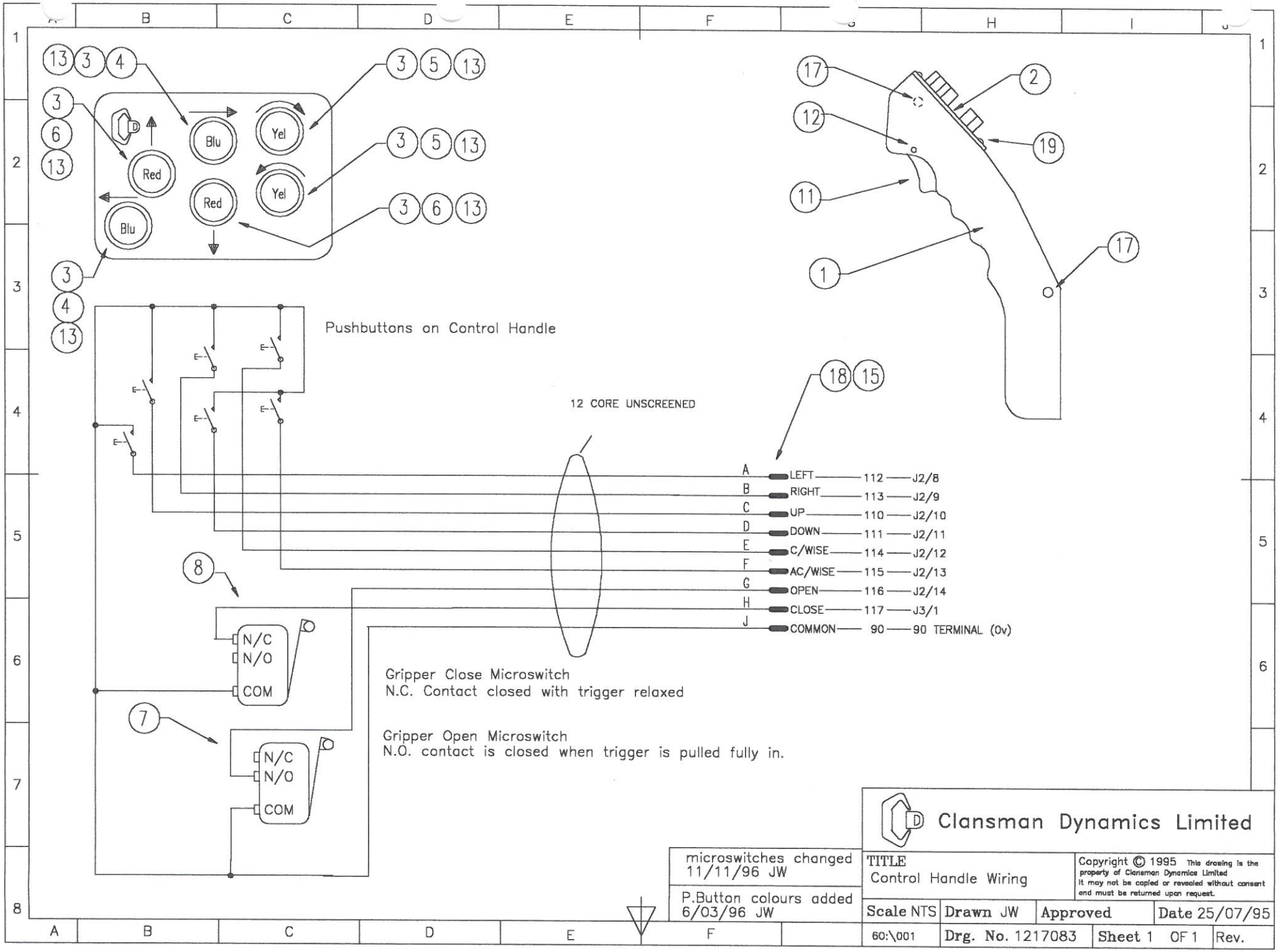
Blu
Yel
Red
Red
Yel
Blu
Pushbuttons on Control Handle
12 CORE UNSCREENED
A LEFT 112 J2/8
B RIGHT 113 J2/9
C UP 110 J2/10
D DOWN 111 J2/11
E C/WISE 114 J2/12
F AC/WISE 115 J2/13
G OPEN 116 J2/14
H CLOSE 117 J3/1
J COMMON 90 90 TERMINAL (0v)
N/C
N/O
COM
N/C
N/O
COM
Gripper Close Microswitch
N.C. Contact closed with trigger relaxed
Gripper Open Microswitch
N.O. contact is closed when trigger is pulled fully in.
microswitches changed 11/11/96 JW
P.Button colours added 6/03/96 JW
Clansman Dynamics Limited
TITLE
Control Handle Wiring
Copyright © 1995 This drawing is the property of Clansman Dynamics Limited It may not be copied or revealed without consent and must be returned upon request.
Scale NTS
Drawn JW
Approved
Date 25/07/95
60:\001
Drg. No. 1217083
Sheet 1 OF 1
Rev.

CONTROL ARM

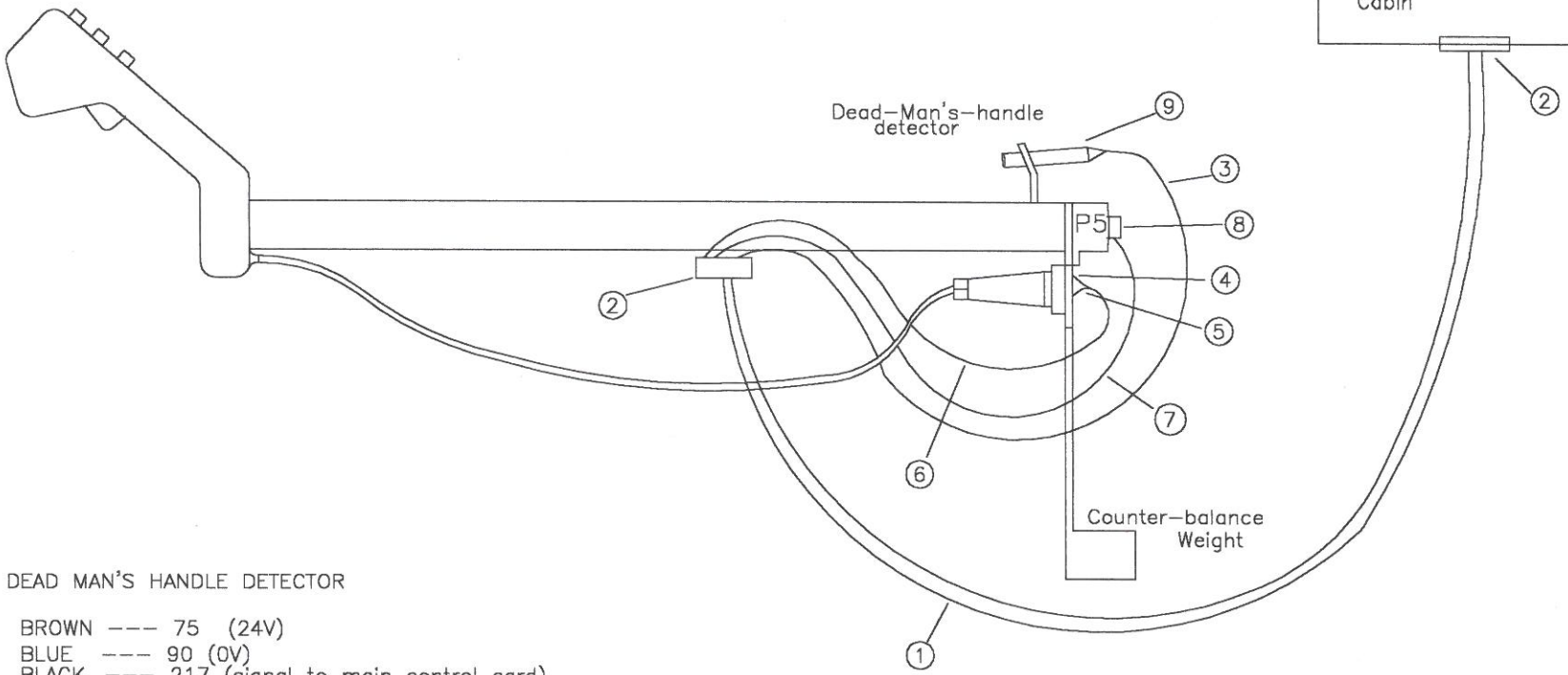

DEAD MAN'S HANDLE DETECTOR

BROWN --- 75 (24V)
BLUE --- 90 (0V)
BLACK --- 217 (signal to main control card)
WHITE --- not connected

SLEW POTENTIOMETER (P5)

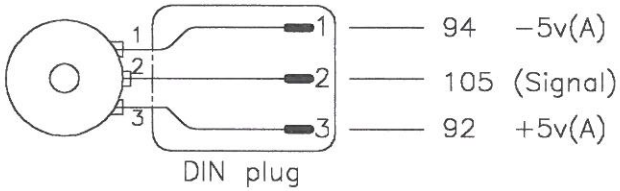

R 1	D.M.H. Wire Colours and Numbers changed. 4/7/97

Slew pot polarity changed 13/11/96

Clansman Dynamics Limited

TITLE
Details of pot. 5 and Dead–Mans–Handle

Scale NTS	Drawn JW	Approved	Date 25/07/95
60:\008	Drg. No. 1217088	Sheet 01 OF 01	Rev. 1

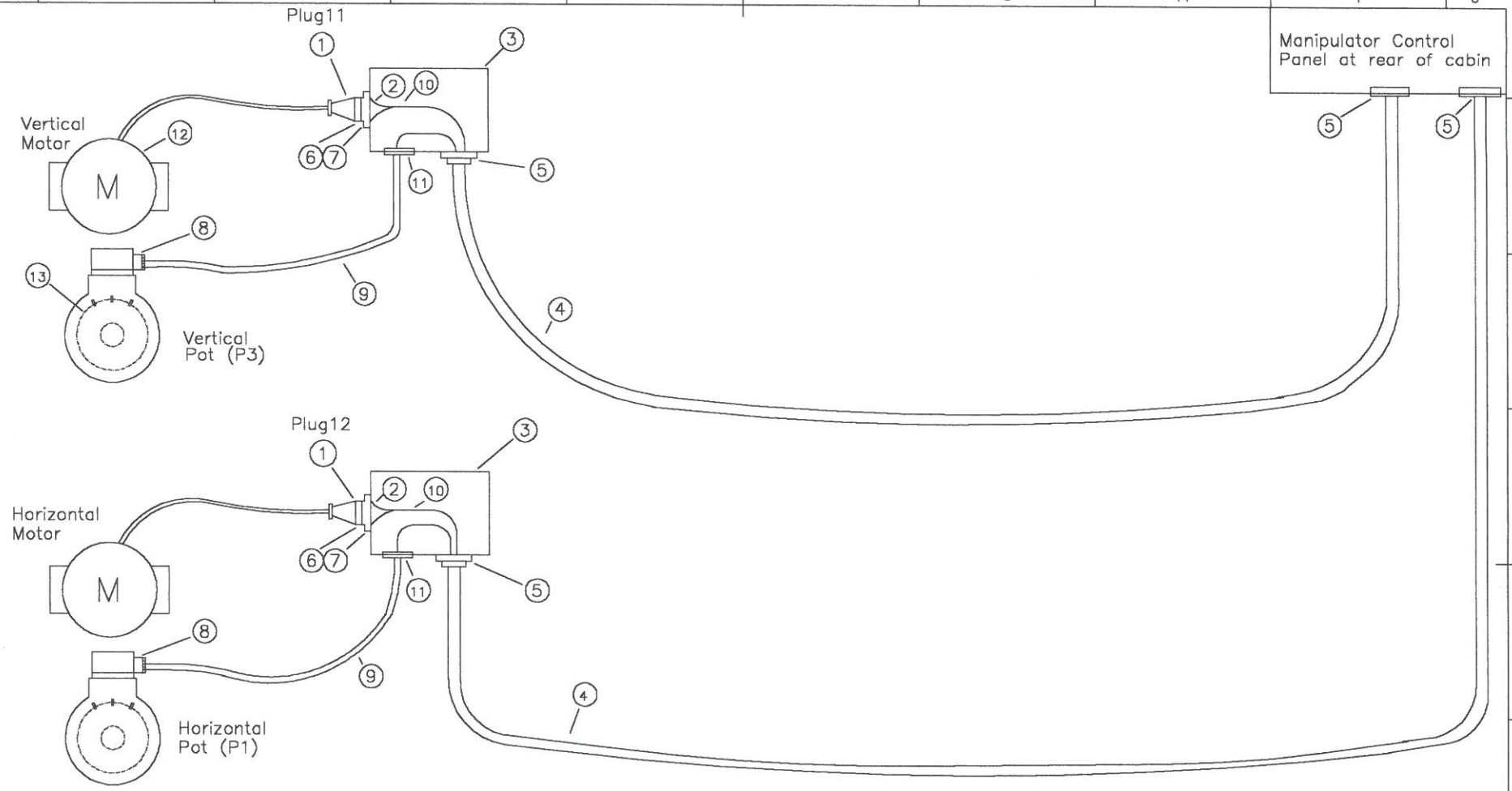

VERTICAL MOTOR

A1 —— PL11/A —— 233
A2 —— PL11/B —— 234
EARTH —— PL11/D —— EARTH

HORIZONTAL MOTOR

A1 —— PL12/A —— 231
A2 —— PL12/B —— 232
EARTH —— PL12/D —— EARTH

VERTICAL POT (P3)

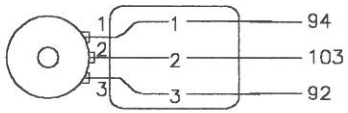

HORIZONTAL POT (P1)

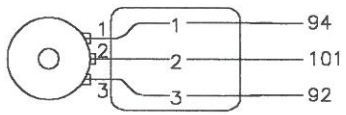

Rev 1 Potentiometer polarities reversed 24/01/96

Clansman Dynamics Limited

TITLE
Control arm motors and pots (Vert & Horiz.)

Scale NTS	Drawn JW	Approved FED	Date 23/05/95
53:\008	Drg. No. 1217078	Sheet 1 OF 1	Rev. 1

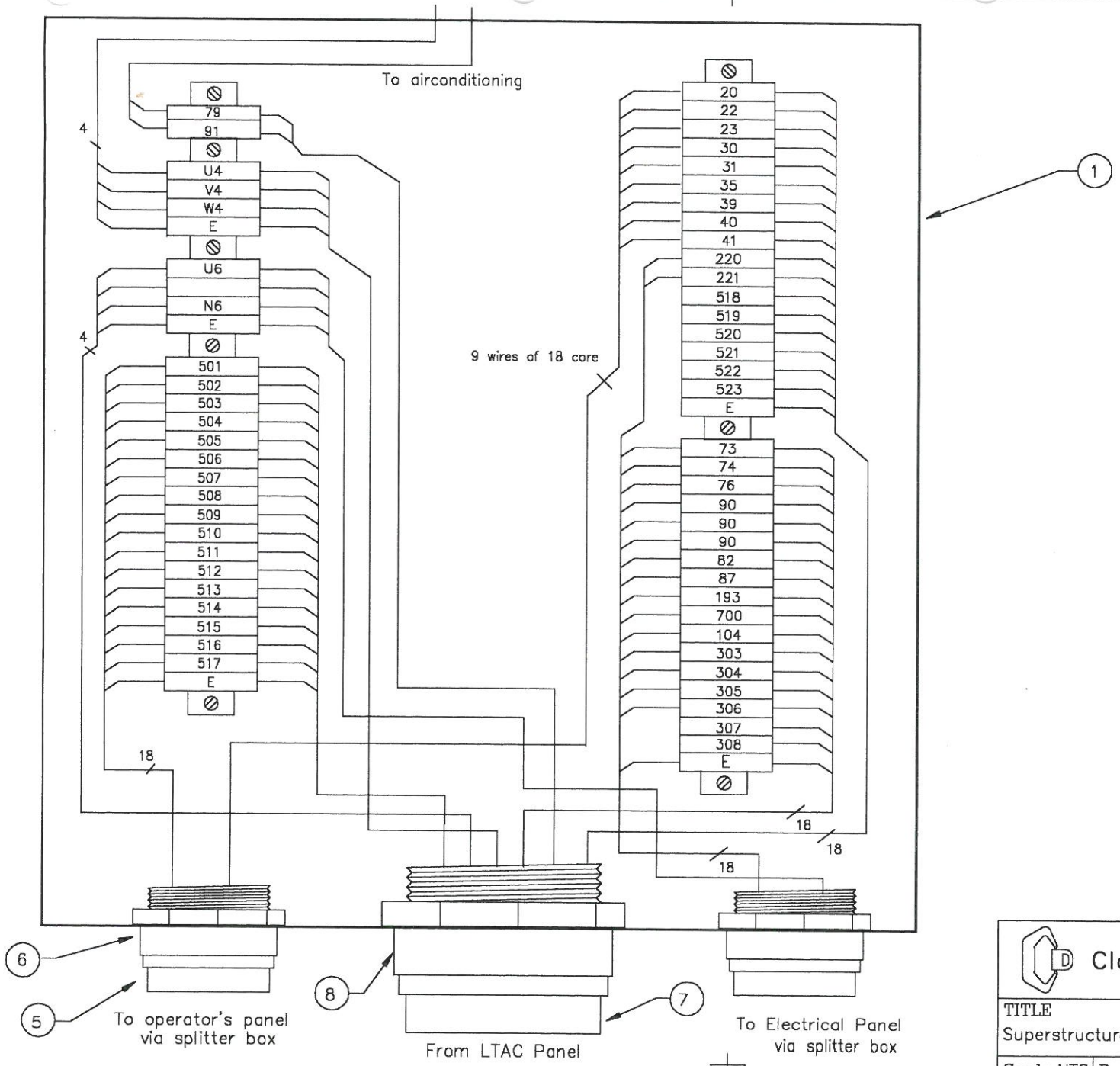

Clansman Dynamics Limited

TITLE
Superstructure Junction Box

Scale NTS	Drawn JW	Approved FED	Date 15/3/99
235	Drg. No. 2217336	Sheet 1 OF 1	Rev. 0

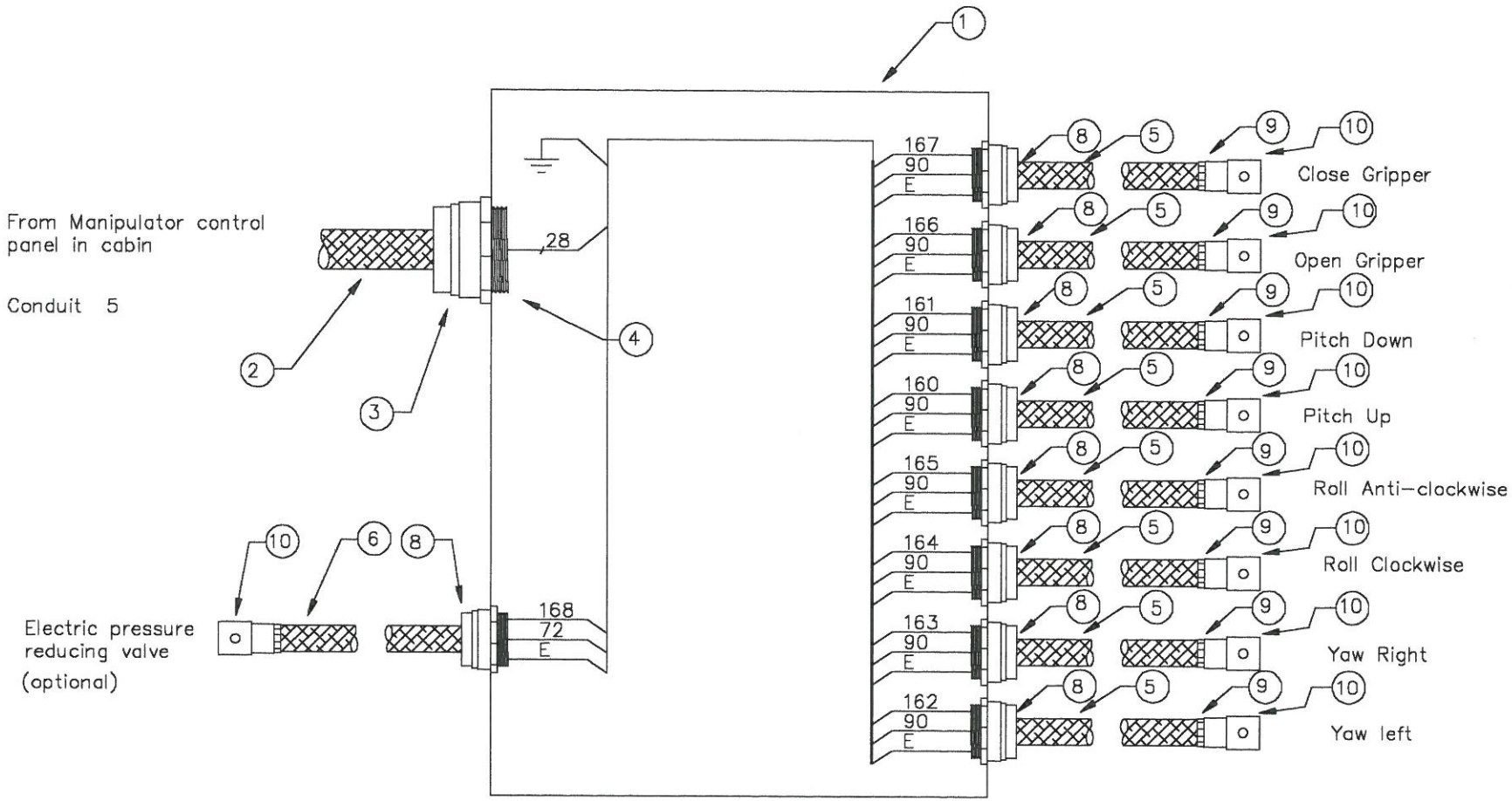

Clansman Dynamics Limited

TITLE Cabling to Boom Manifold		Copyright © 1995 This drawing is the property of Clansman Dynamics Limited It may not be copied or revealed without consent and must be returned upon request.	
Scale NTS	Drawn JW	Approved FED	Date 26/07/96
111:001	Drg. No. 2217204	Sheet 1 OF 1	Rev. 0

Customer Controls:
Terminals in Motor Starter Panel

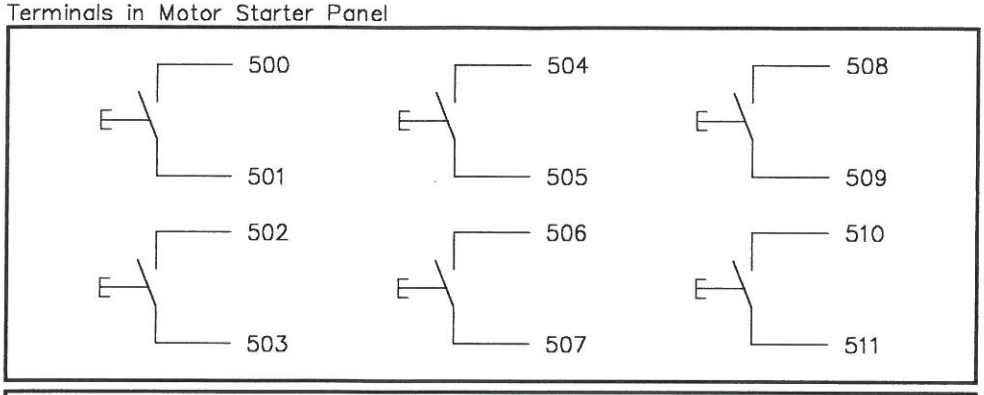

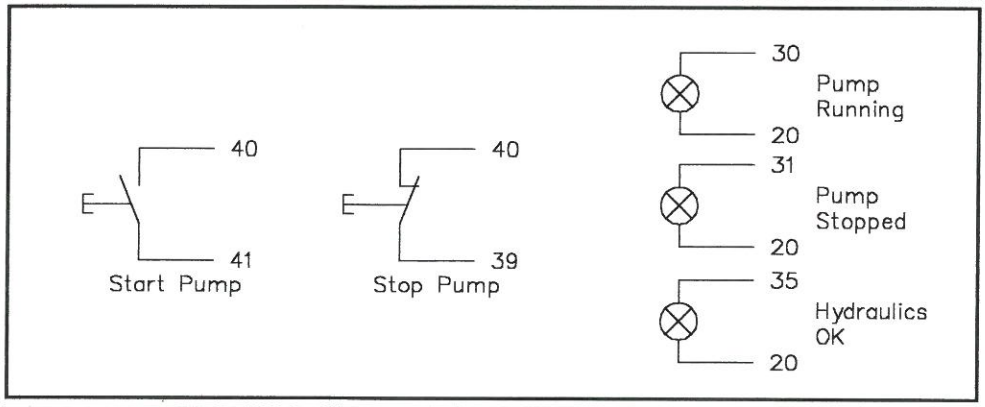

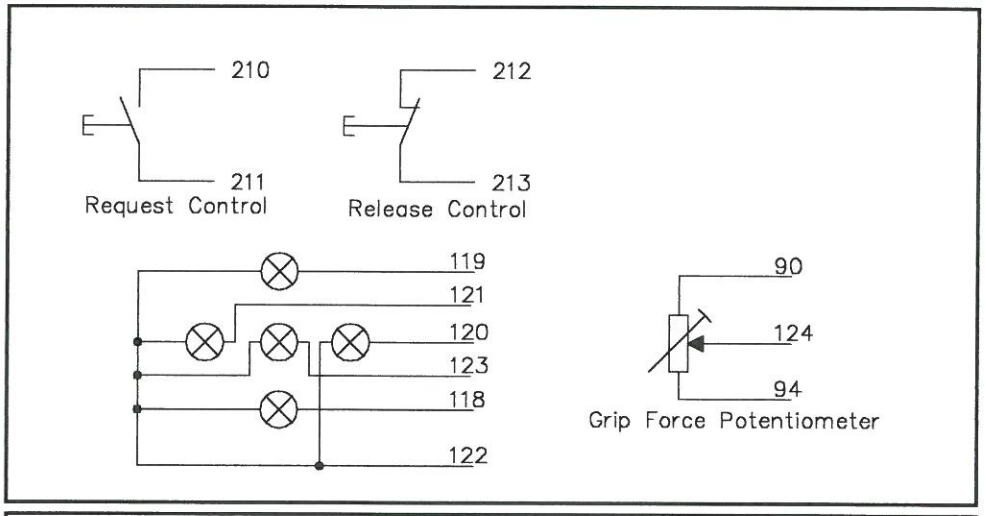

Emergency Stop

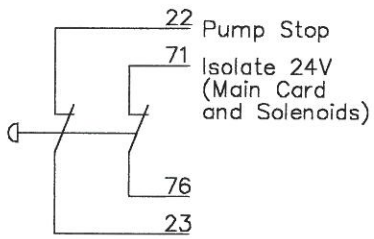

R1 Req/Rel control wire numbers corrected

Clansman Dynamics Limited

TITLE
Details of Operators Panel

Scale NTS	Drawn JW	Approved	Date 25/07/95
60:\005	Drg. No. 1217086	Sheet 1 OF 2	Rev.0

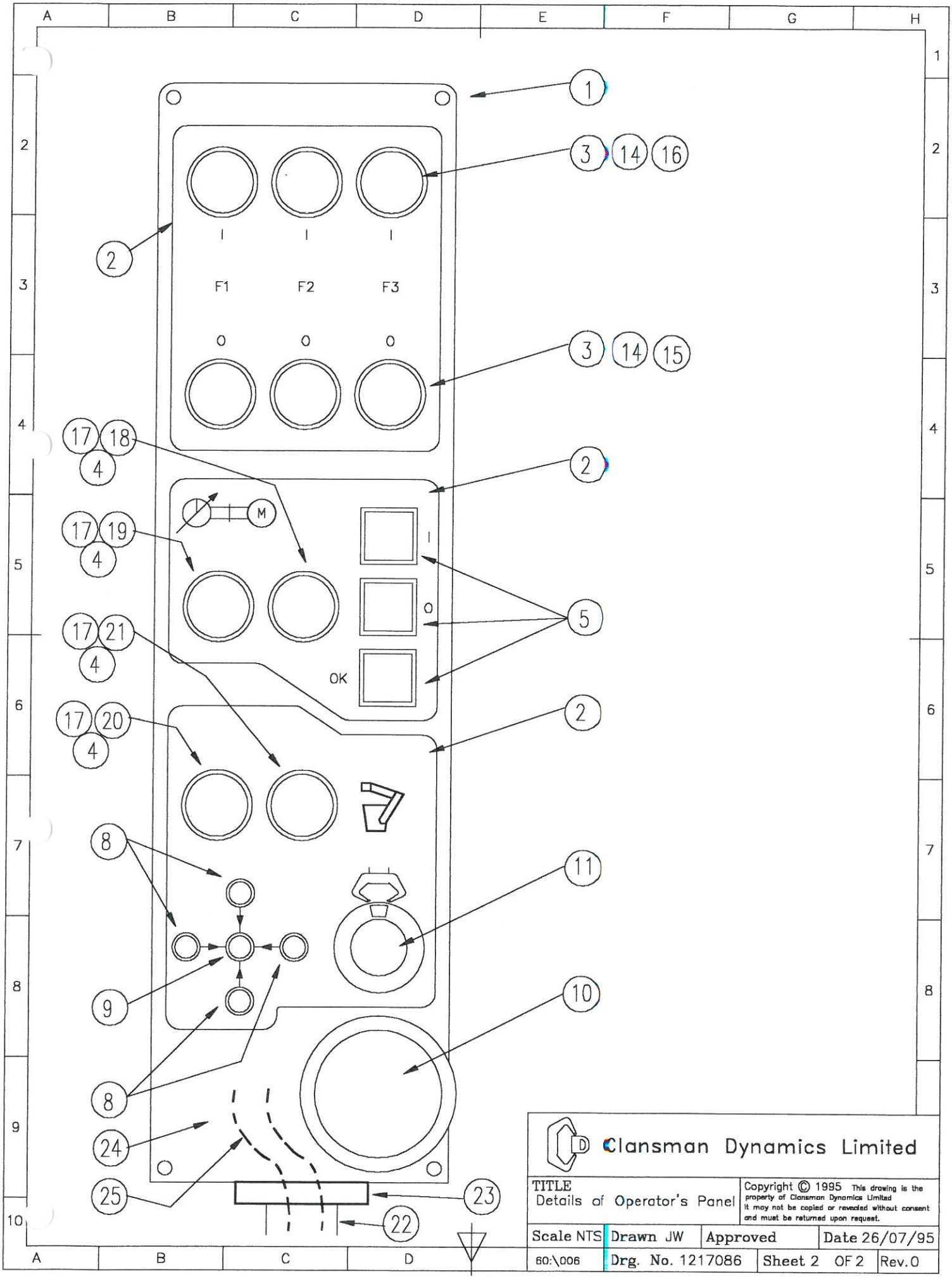

Clansman Dynamics Limited

TITLE
Details of Operator's Panel

Scale NTS	Drawn JW	Approved	Date 26/07/95
60:\006	Drg. No. 1217086	Sheet 2 OF 2	Rev.0

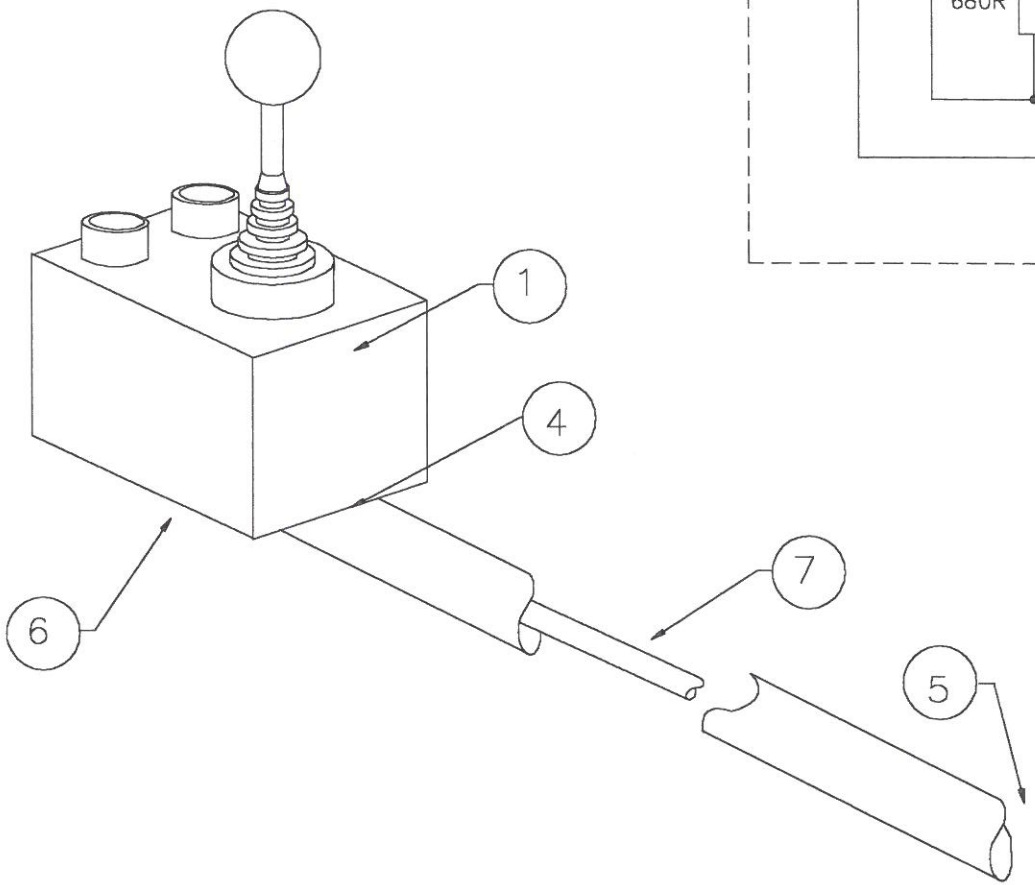

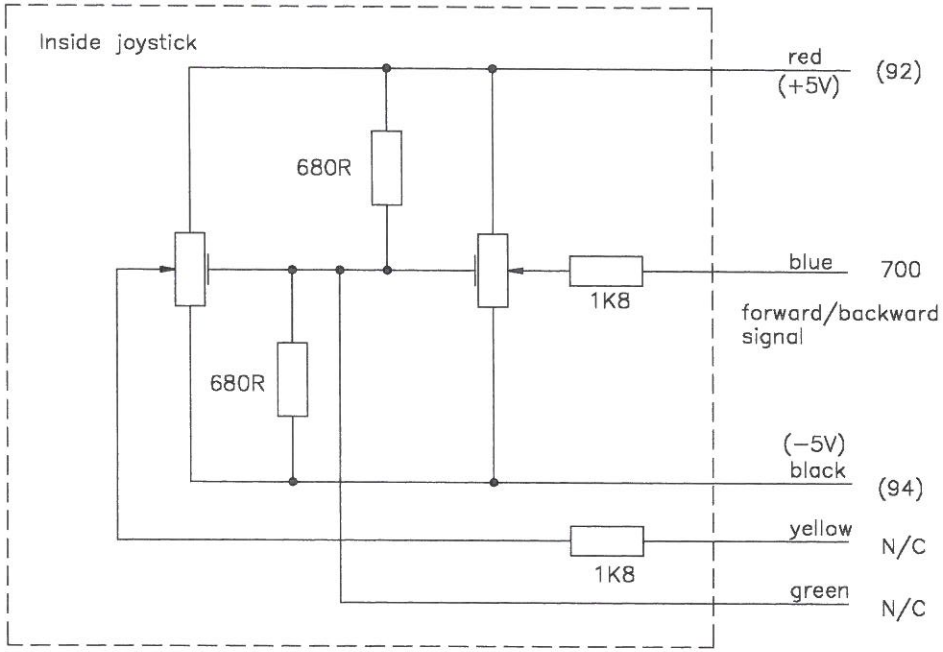

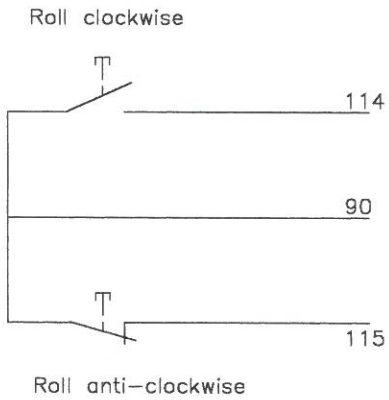

Clansman Dynamics Limited

TITLE
Details of Left−hand controls

Scale NTS	Drawn jw	Approved FED	Date 22/4/99
250	Drg. No.2217356	Sheet 1 OF 1	Rev. 0

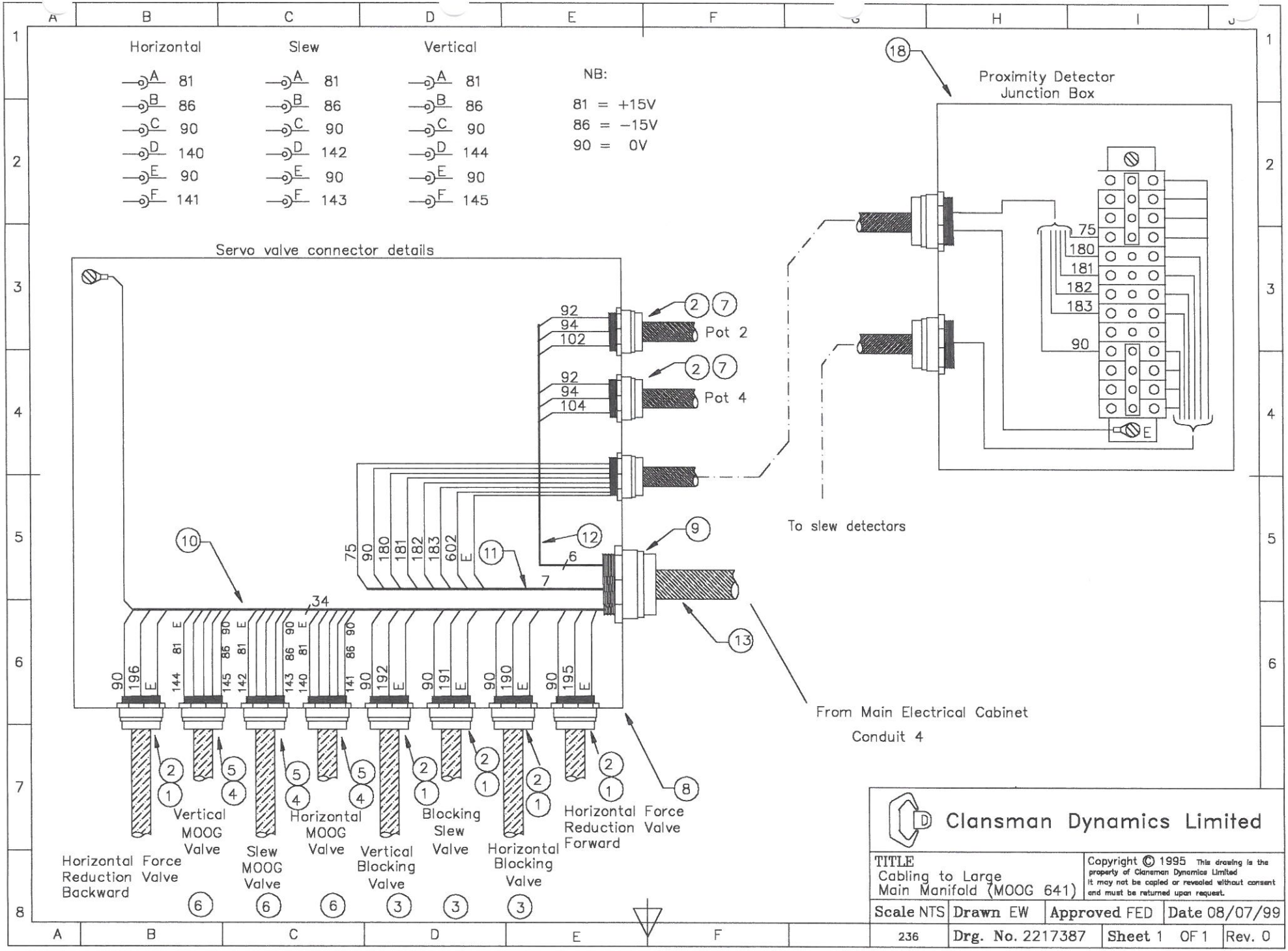
Horizontal
A 81
B 86
C 90
D 140
E 90
F 141
Slew
A 81
B 86
C 90
D 142
E 90
F 143
Vertical
A 81
B 86
C 90
D 144
E 90
F 145
NB:
81 = +15V
86 = −15V
90 = 0V
Proximity Detector Junction Box
75
180
181
182
183
90
E
Servo valve connector details
92
94
102
Pot 2
92
94
104
Pot 4
75
90
180
181
182
183
602
E
6
7
34
To slew detectors
From Main Electrical Cabinet
Conduit 4
Horizontal Force Reduction Valve Backward
Vertical MOOG Valve
Slew MOOG Valve
Horizontal MOOG Valve
Vertical Blocking Valve
Blocking Slew Valve
Horizontal Blocking Valve
Horizontal Force Reduction Valve Forward
Clansman Dynamics Limited
TITLE
Cabling to Large Main Manifold (MOOG 641)
Copyright © 1995 This drawing is the property of Clansman Dynamics Limited It may not be copied or revealed without consent and must be returned upon request.
Scale NTS
Drawn EW
Approved FED
Date 08/07/99
236
Drg. No. 2217387
Sheet 1 OF 1
Rev. 0

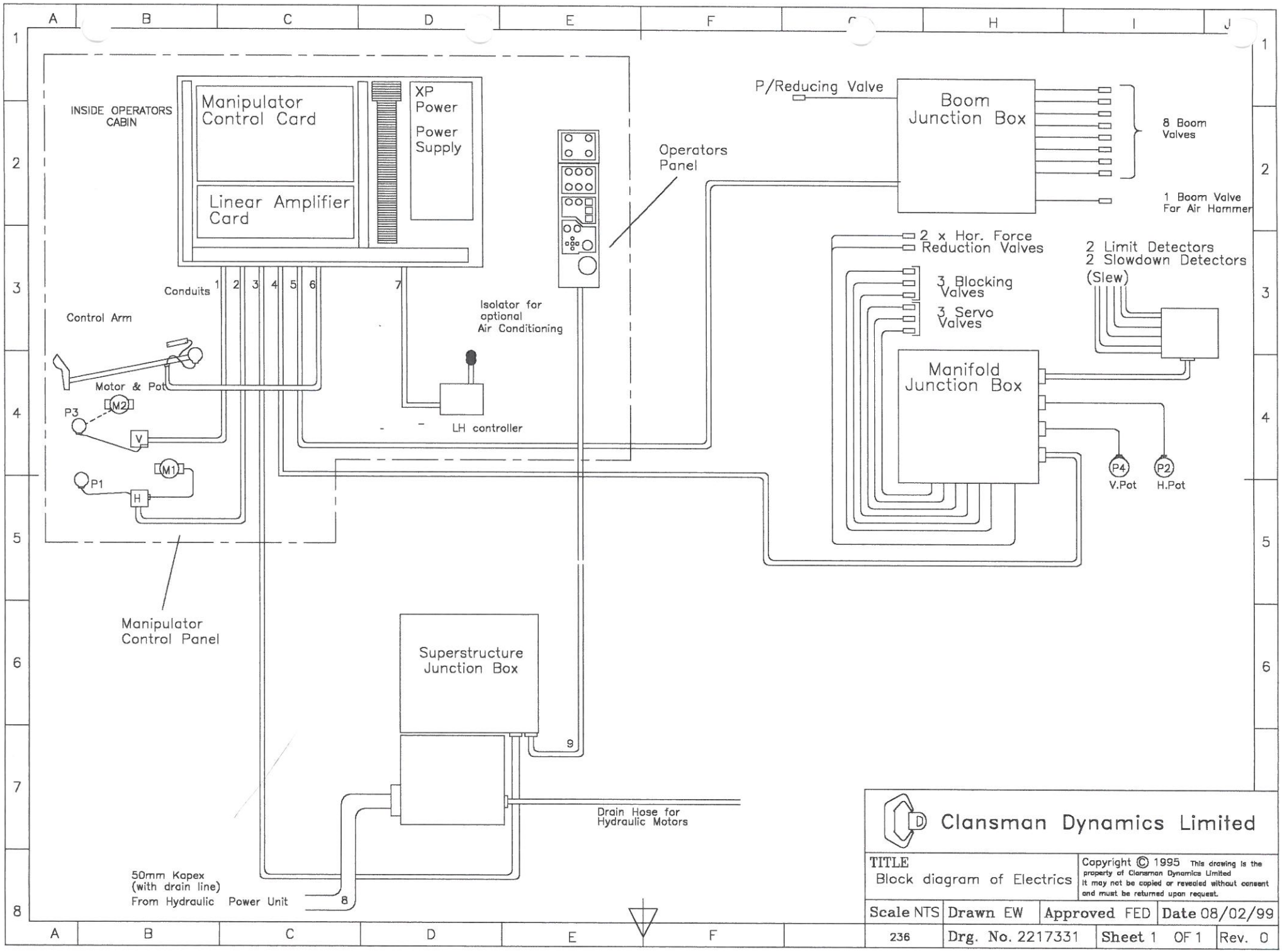
INSIDE OPERATORS CABIN
Manipulator Control Card
Linear Amplifier Card
XP Power
Power Supply
Operators Panel
P/Reducing Valve
Boom Junction Box
8 Boom Valves
1 Boom Valve For Air Hammer
2 x Hor. Force Reduction Valves
3 Blocking Valves
3 Servo Valves
2 Limit Detectors
2 Slowdown Detectors (Slew)
Manifold Junction Box
P4
V.Pot
P2
H.Pot
Conduits
1
2
3
4
5
6
7
Control Arm
Motor & Pot
M2
P3
V
M1
P1
H
Isolator for optional Air Conditioning
LH controller
Manipulator Control Panel
Superstructure Junction Box
9
Drain Hose for Hydraulic Motors
50mm Kapex (with drain line) From Hydraulic Power Unit
8
Clansman Dynamics Limited
TITLE
Block diagram of Electrics
Copyright © 1995 This drawing is the property of Clansman Dynamics Limited It may not be copied or revealed without consent and must be returned upon request.
Scale NTS
Drawn EW
Approved FED
Date 08/02/99
236
Drg. No. 2217331
Sheet 1 OF 1
Rev. 0

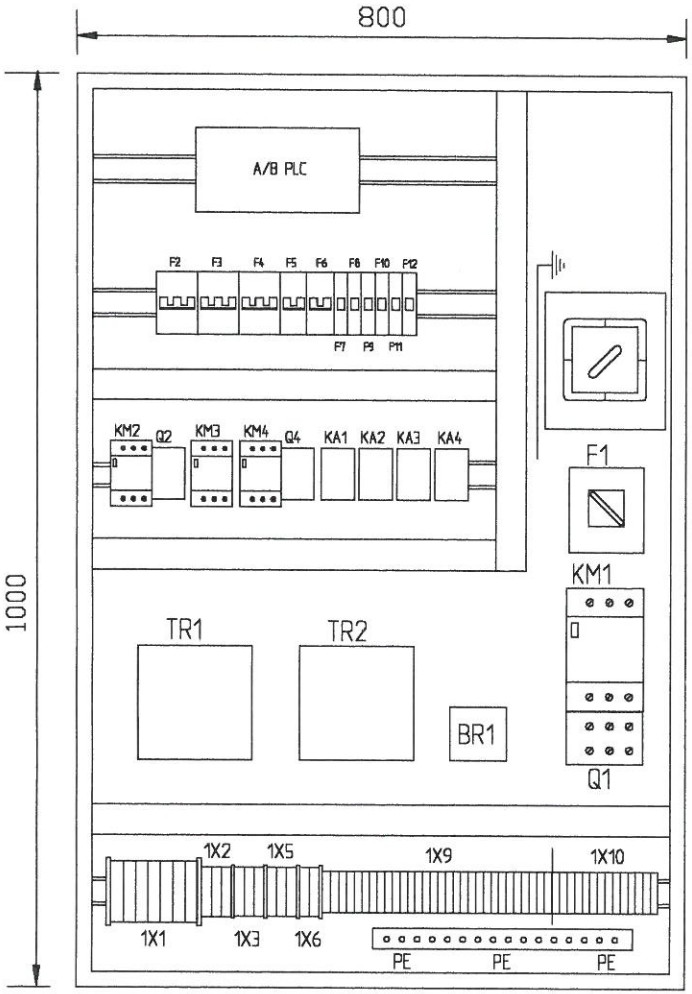

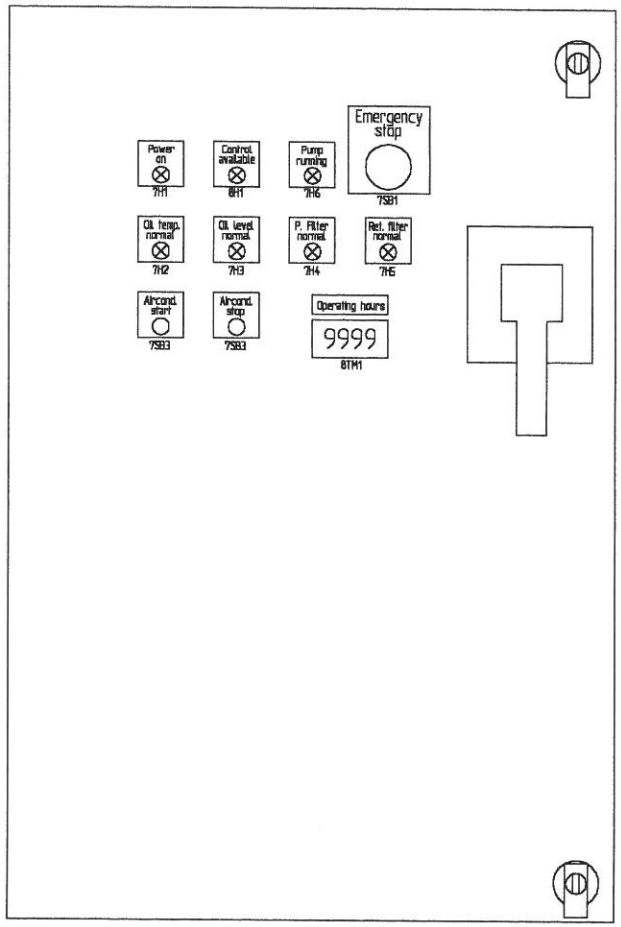

Clansman Dynamics Limited

TITLE
Layout of LTAC Panel

Scale NTS	Drawn jw	Approved FED	Date 2/11/99
E:\svr\drgs	Drg. No. 2217414	Sheet 4 OF 6	Rev. 0

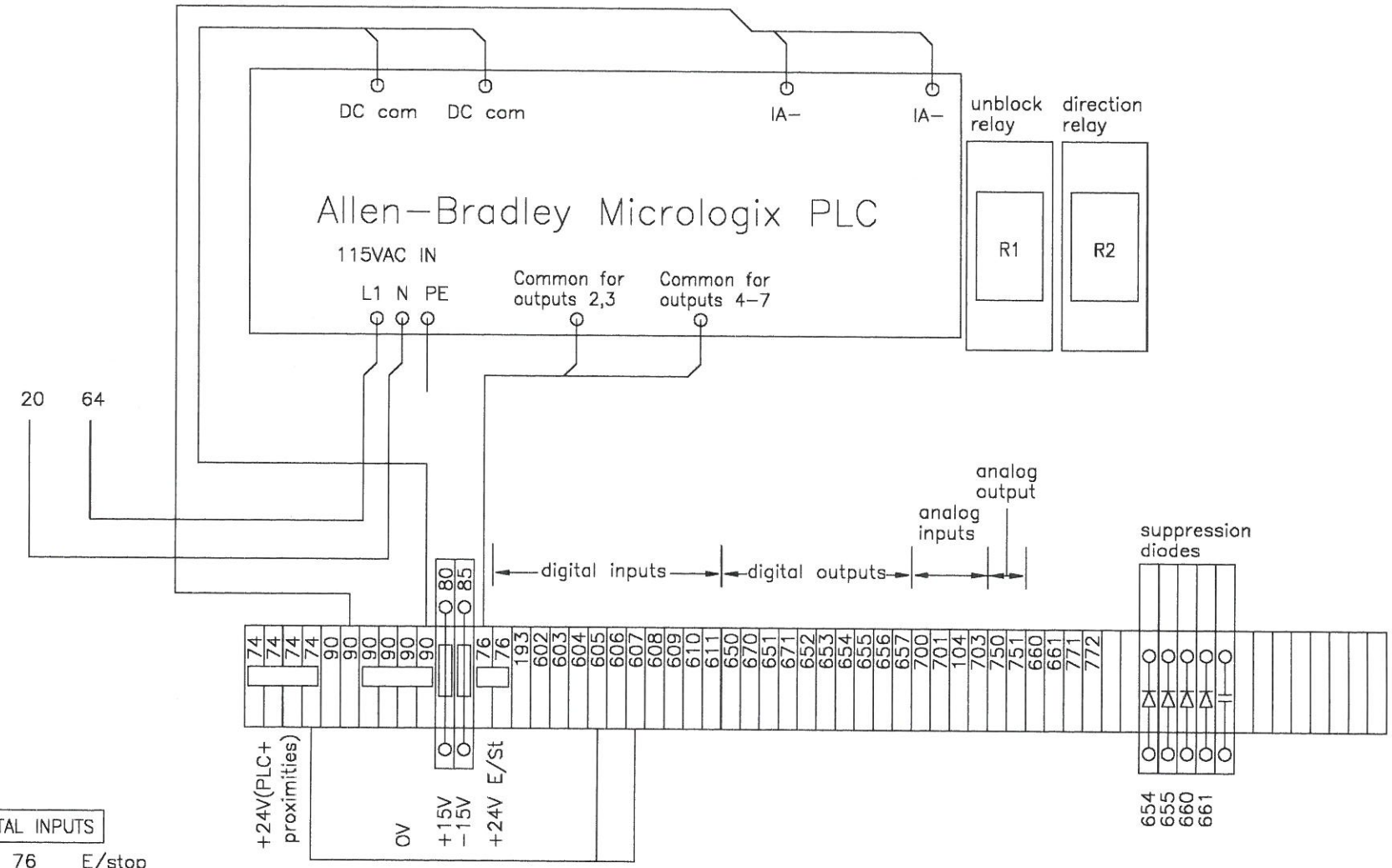

DIGITAL INPUTS

I:0/0	76	E/stop
I:0/1	193	Control on
I:0/2	602	Slew Centred
I:0/3	603	Kolsters OK
I:0/4	604	n/c
I:0/5	605	n/c
I:0/6	606	Forward slowdown
I:0/7	607	n/c
I:0/8	608	Backward slowdown
I:0/9	609	n/c
I:0/10	610	n/c
I:0/11	611	n/c

DIGITAL OUTPUTS

O:0/0	650/670	n/c
O:0/1	651/671	n/c
O:0/2	652	n/c
O:0/3	653	n/c
O:0/4	654	Unblock relay
O:0/5	655	Direction relay
O:0/6	656	Flashing lamp
O:0/7	657	Hooter

ANALOG I/O

IA:0	700	Joystick sig
IA:1	701	n/c
IA:2	104	Vertical posn.
IA:3	703	n/c
OA:0	750	Carriage
	751	speed

Clansman Dynamics Limited

TITLE
Details of terminals in carriage control panel

Scale NTS	Drawn jw	Approved FED	Date 2/11/99
E:\svr\drgs	Drg. No. 2217414	Sheet 5 OF 6	Rev. 0

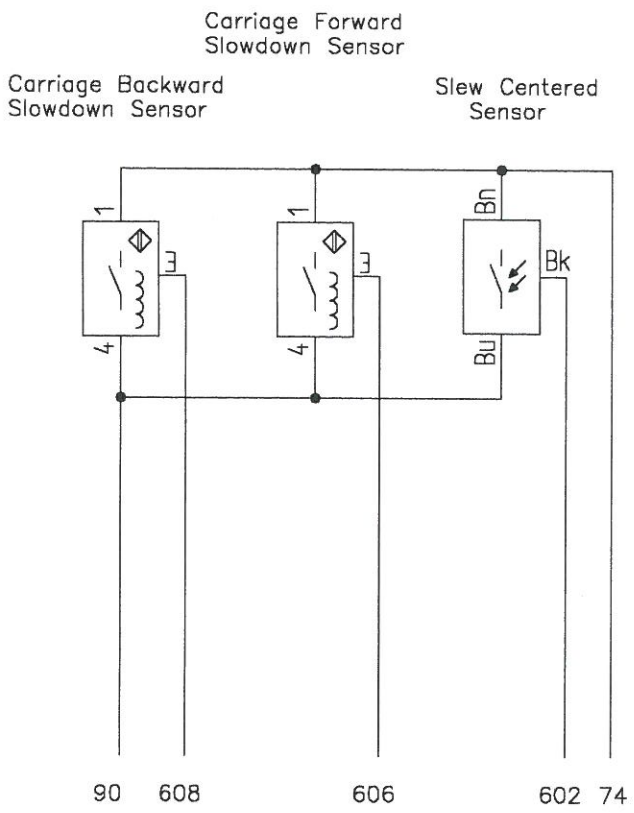

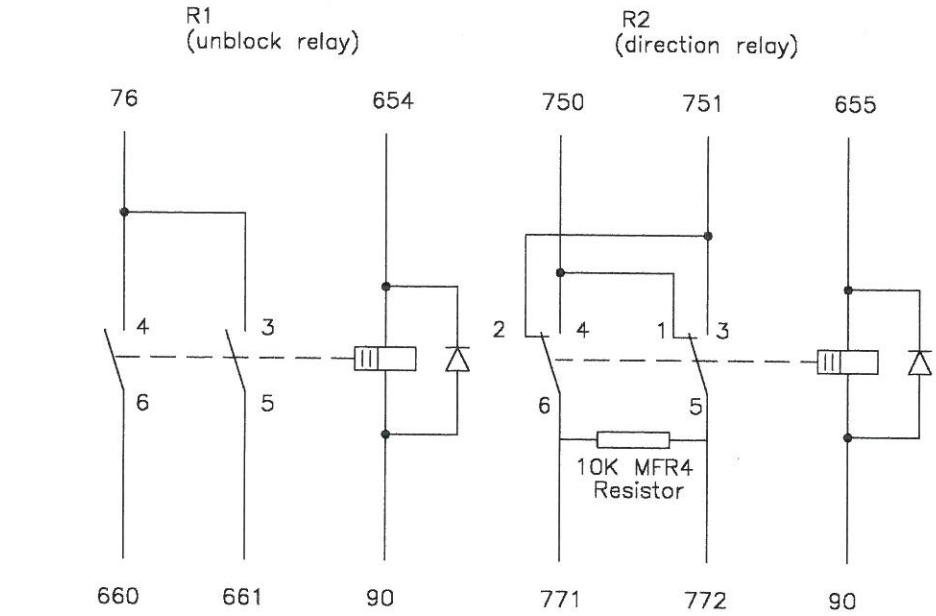

To carriage blocking valve

To carriage brakes valve.

Reversing signal to carriage servo valve.

Connections to carriage servo valve

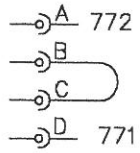

Clansman Dynamics Limited

TITLE
Details of relays in carriage control panel

Scale NTS	Drawn jw	Approved FED	Date 2/11/99
E:\svr\drgs	Drg. No. 2217414	Sheet 6 OF 6	Rev. 0

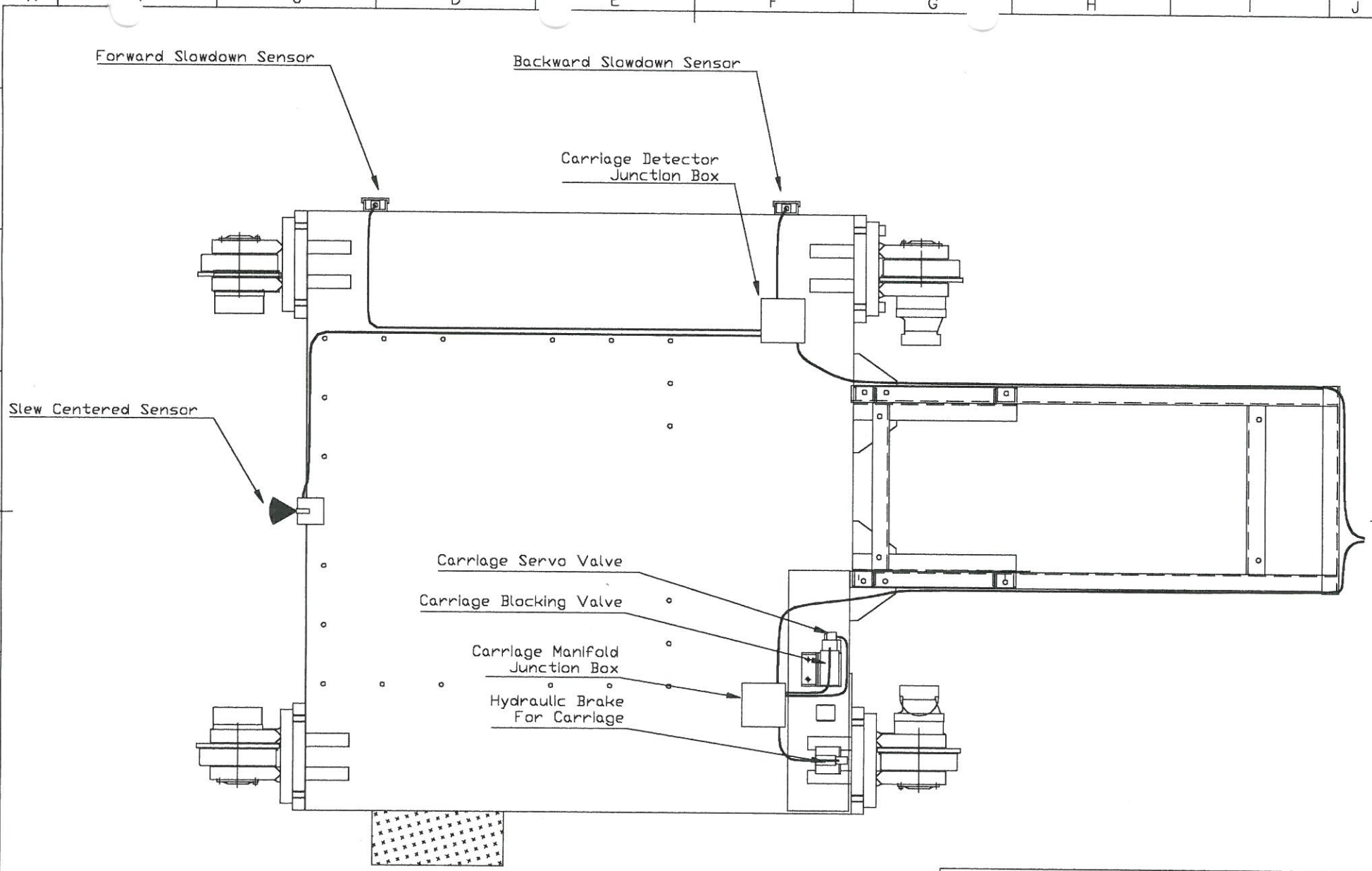

Clansman Dynamics Limited

TITLE
Layout of Carriage

Scale NTS	Drawn EW	Approved FED	Date 2/11/99
E:\svr\drgs	Drg. No. 2217422	Sheet 1 OF 2	Rev. 0

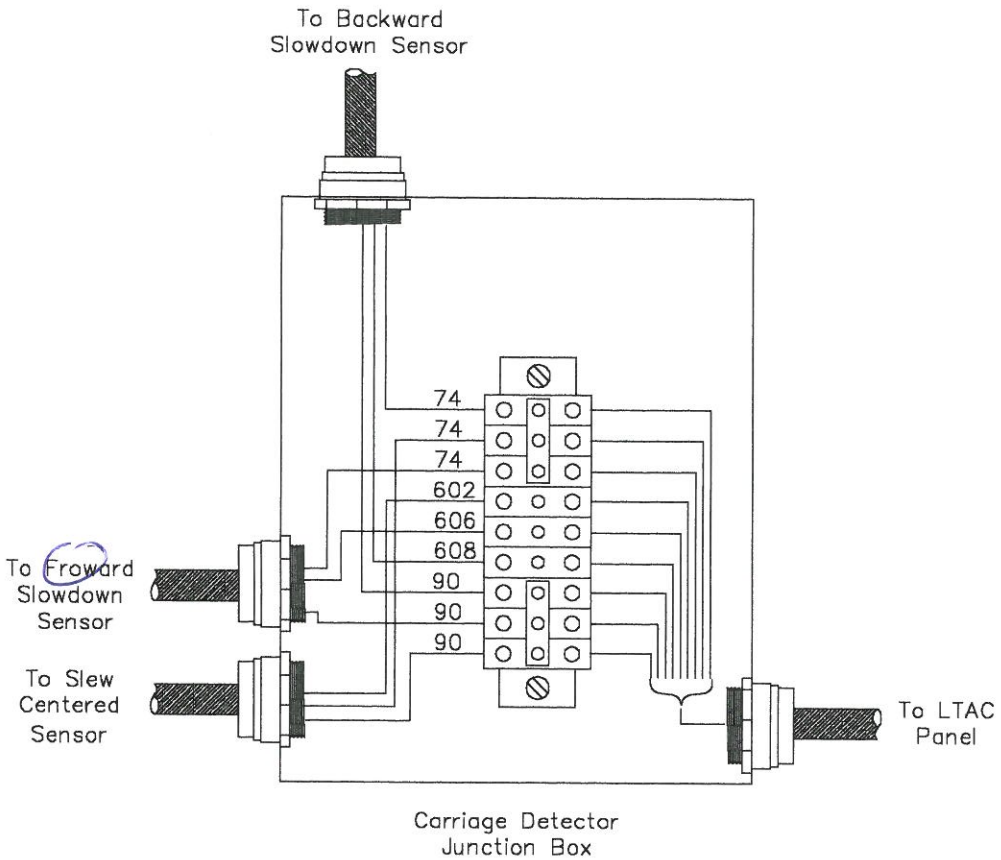

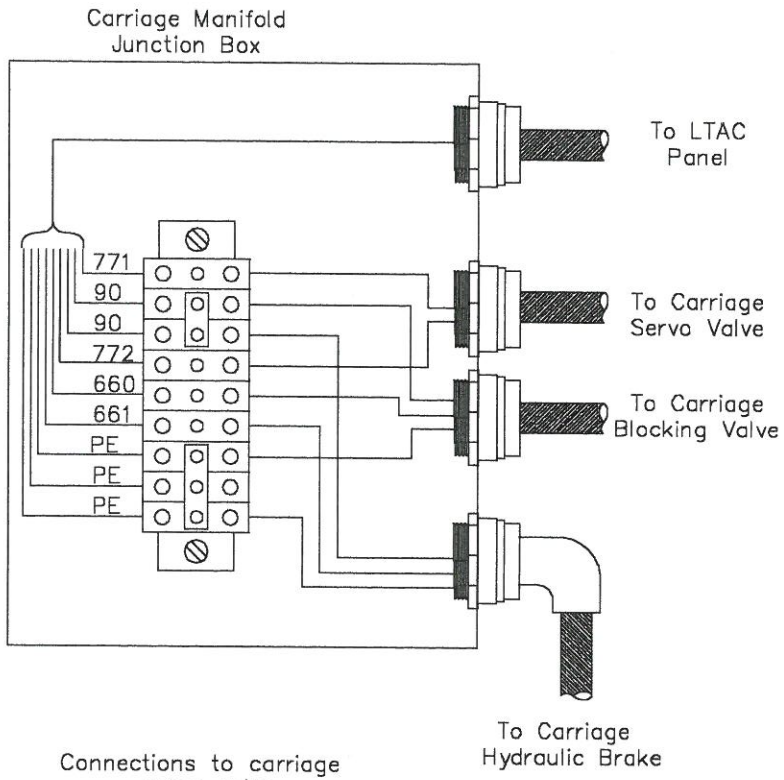

Connections to carriage servo valve

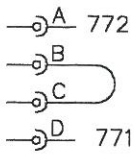

Clansman Dynamics Limited

TITLE
Layout of Carriage

Scale NTS	Drawn EW	Approved FED	Date 2/11/99
E:\svr\drgs	Drg. No. 2217422	Sheet 2 OF 2	Rev. 0

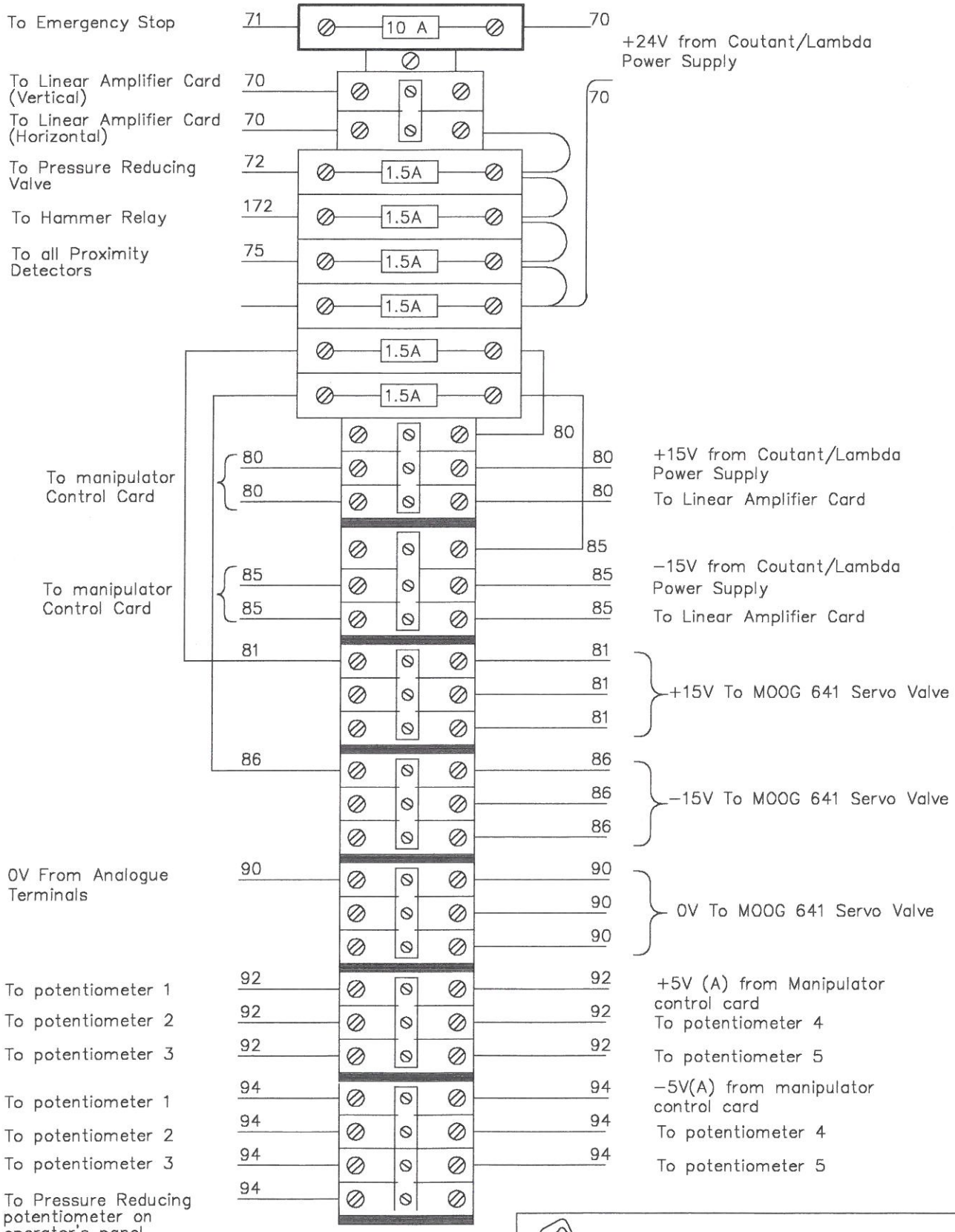

Clansman Dynamics Limited

TITLE
Details of terminals in Manipulator Control Panel

Scale NTS	Drawn EW	Approved FED	Date 08/02/99
236	Drg. No. 2217330	Sheet 1 OF 3	Rev. 0

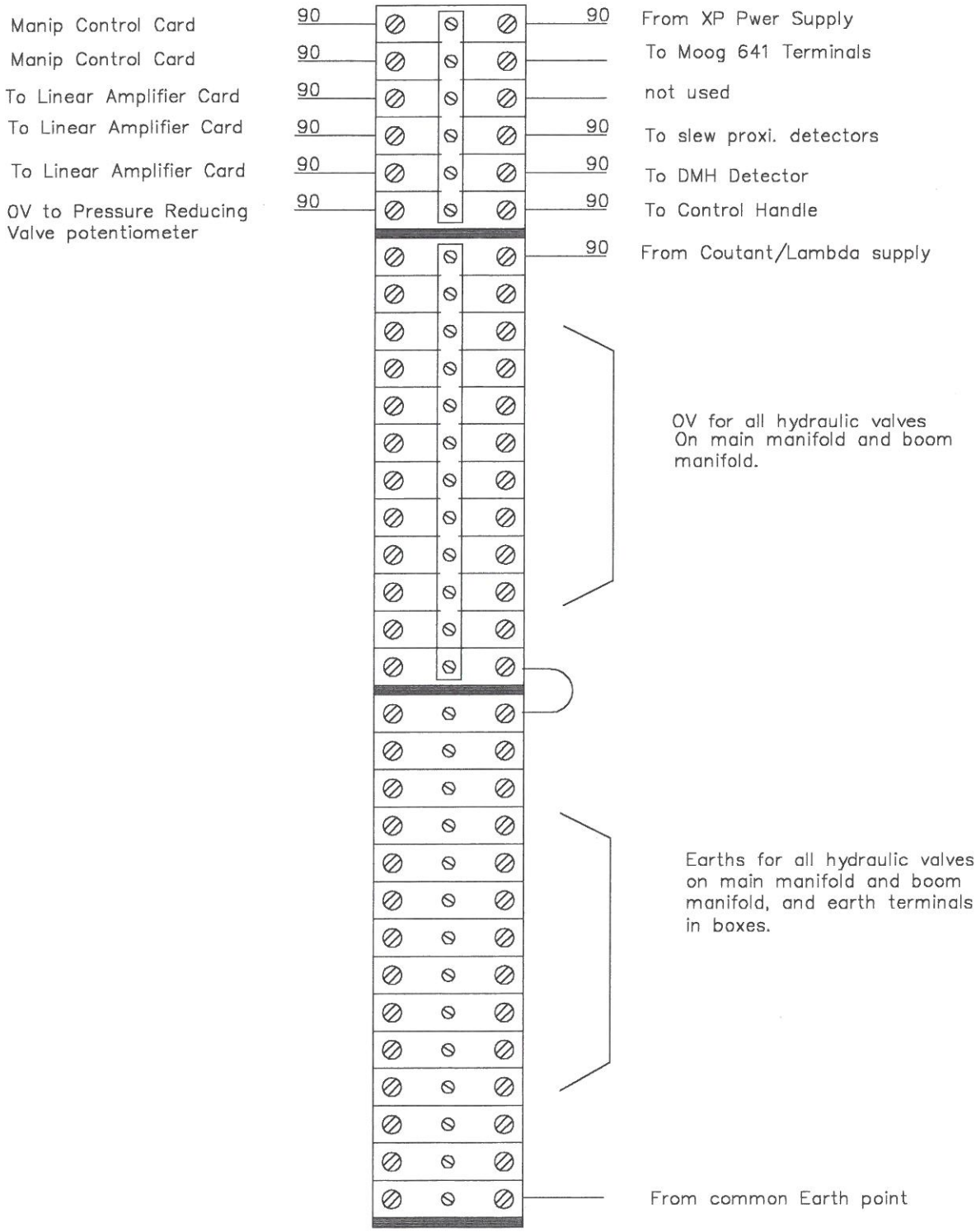

Clansman Dynamics Limited

TITLE
Details of terminals in Manipulator control panel

Scale NTS	Drawn EW	Approved FED	Date 08/02/99
236	Drg. No. 2217330	Sheet 2 OF 3	Rev. 0

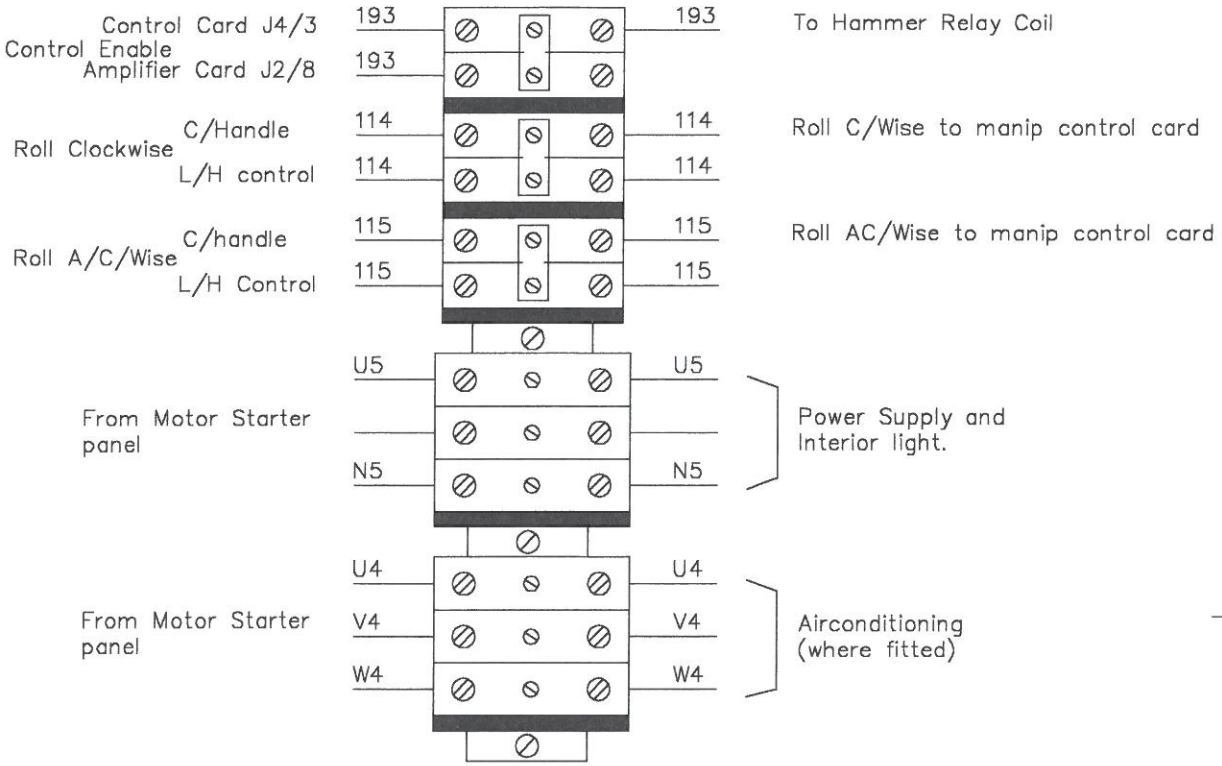

Clansman Dynamics Limited

TITLE
Details of terminals in Manipulator control panel.

Scale NTS	Drawn EW	Approved FED	Date 08/02/99
236	Drg. No. 2217330	Sheet 3 OF 3	Rev. 0

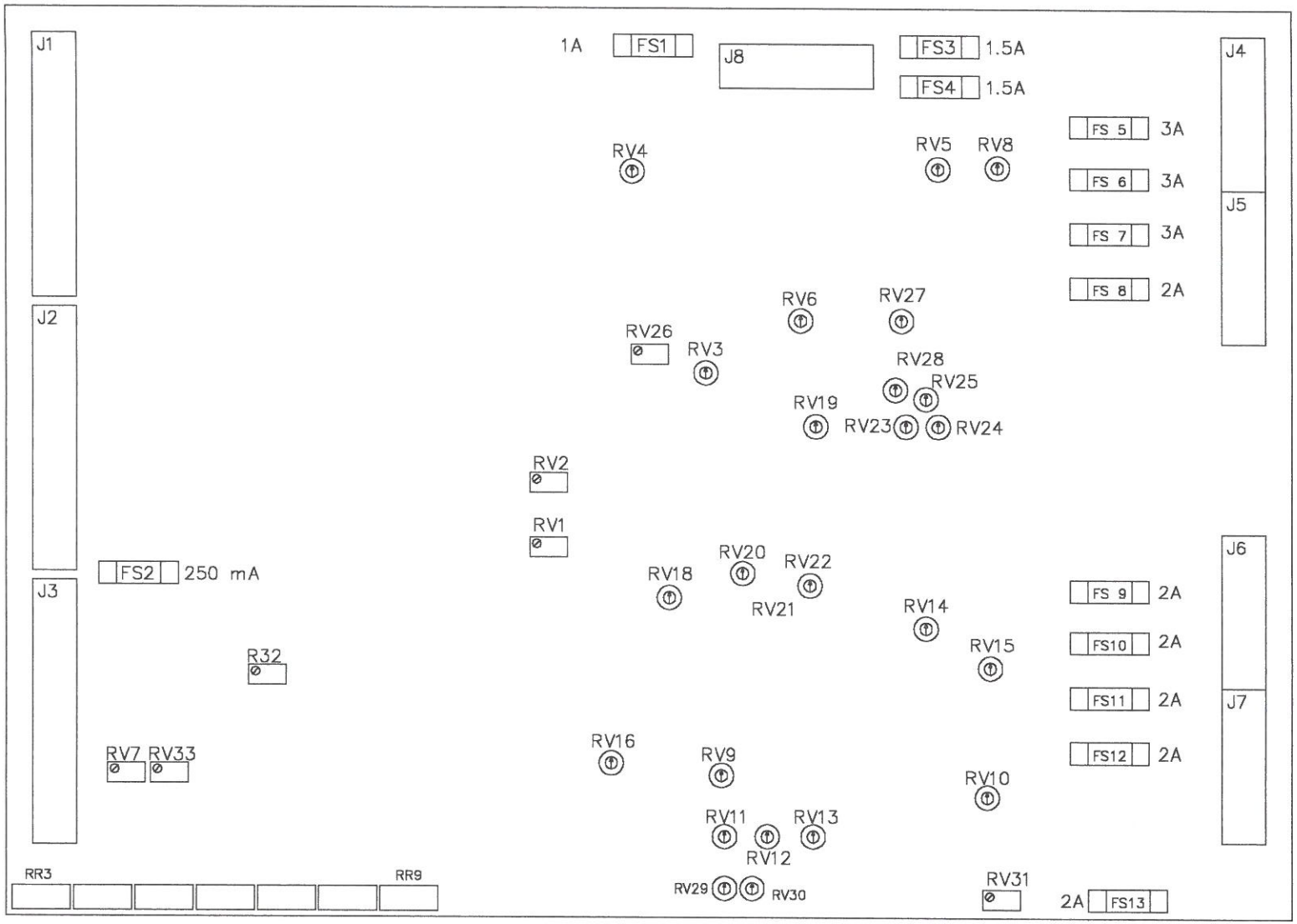

Clansman Dynamics Limited

TITLE
Connections to Manipulator Control Card – MOOG 641

Scale NTS	Drawn JW	Approved	Date 4/10/98
236	Drg. No. 2217328	Sheet 1 OF 9	Rev.

Connector J1

Linked out	219	1	
	218	2	
From LTAC Panel	220	3	"PUMP RUNNING" signal
	221	4	
		5	N/C
From Control Arm	217	6	"Dead Man's Handle Detector" (DMH)
Linked out	214	7	
	215	8	
From Operators Panel	212	9	"RELEASE CONTROL" pushbutton
	213	10	
	210	11	"REQUEST CONTROL" pushbutton
	211	12	
From Slewing Detectors	183	13	Left Limit Detector
	181	14	Right Limit Detector

Clansman Dynamics Limited

TITLE
Connections to Manipulator Control Card – MOOG 641

Scale NTS	Drawn JW	Approved	Date 4/10/98
236	Drg. No. 2217328	Sheet 2 OF 9	Rev. 0

Connector J2

From Slewing Detectors	182	1	Left Slowdown Detector
	180	2	Right Slowdown Detector
To Operators Panel	123	3	"CONTROL ON" signal to LED
	120	4	"GO FORWARD" signal to arrow LED
	121	5	"GO BACK" signal to arrow LED
	118	6	"GO UP" signal to arrow LED
	119	7	"GO DOWN" signal to arrow LED
From Control Handle	112	8	"YAW LEFT" pushbutton signal
	113	9	"YAW RIGHT" pushbutton signal
	110	10	"PITCH UP" pushbutton signal
	111	11	"PITCH DOWN" pushbutton signal
	114	12	"ROLL CLOCKWISE" pushbutton signal
	115	13	"ROLL ANTI-CLOCKWISE" pushbutton signal
	116	14	"OPEN GRIPPER" pushbutton signal

Clansman Dynamics Limited

TITLE
Connections to Manipulator Control Card – MOOG 641

Scale NTS	Drawn JW	Approved	Date 4/10/98
236	Drg. No. 2217328	Sheet 3 OF 9	Rev.

Connector J3

From Control Handle	117	1	"CLOSE GRIPPER" pushbutton signal
	NC	2	NC
From Control Arm	105	3	Slew potentiometer (P5) signal
From Control Arm	103	4	Vertical potentiometer (P3) signal
From P4 via Manifold Box	104	5	Vertical potentiometer (P4) signal
To Operators Panel	122	6	+24V supply for LED's (fused at 250 mA)
To commoned terminals for potentiometer excitation	92	7	Reference supplies for all 5 potentiometers
	94	8	
From Operators Panel	124	9	"GRIP FORCE" potentiometer signal
From Control Arm	101	10	Horizontal potentiometer (P1) signal
From P2 via Manifold Box	102	11	Horizontal potentiometer (P2) signal
	NC	12	Digital +5V Supply.
	NC	13	NC
	NC	14	NC

Legend
NC = No Connection

Clansman Dynamics Limited

TITLE
Connections to Manipulator Control Card – MOOG 641

Scale NTS	Drawn JW	Approved	Date 4/10/98
236	Drg. No. 2217328	Sheet 4 OF 9	Rev.

Connector J4

"SLEW UNBLOCK" to solenoid	1	191	To Main Manifold
"VERTICAL UNBLOCK" to solenoid	2	192	
"ENABLE FORCE FEEDBACK"	3	193	To Terminals
"HORIZONTAL UNBLOCK" to solenoid	4	190	To Main Manifold
"Horiz. Force limitation" to solenoid	5	195	To Main Manifold
"YAW LEFT" to solenoid	6	162	To Boom Manifold
"YAW RIGHT" to solenoid	7	163	
"PITCH UP" to solenoid	8	160	

Legend
NC = No Connection

Clansman Dynamics Limited

TITLE
Connections to Manipulator Control Card – MOOG 641

Scale NTS	Drawn JW	Approved	Date 5/10/98
236	Drg. No. 2217328	Sheet 5 OF 9	Rev.

Connector J5

"PITCH DOWN" to solenoid	1	161	To Boom Manifold
"ROLL CLOCKWISE" to solenoid	2	164	To Boom Manifold
"ROLL ANTI-CLOCKWISE" to solenoid	3	165	To Boom Manifold
"OPEN GRIPPER" to solenoid	4	166	To Boom Manifold
"CLOSE GRIPPER" to solenoid	5	167	To Boom Manifold
Slew Servo Voltage (out)	6	142	To Slew Servo Valve via Manifold Box
Slew Spool Position (in)	7	143	To Slew Servo Valve via Manifold Box
Slew Servo Valve Current (Hi)	8	NC	

Legend
NC = No Connection

R1 references to Breaker deleted jw 16/05/97

Clansman Dynamics Limited

TITLE
Connections to Manipulator Control Card

Scale NTS	Drawn JW	Approved	Date 18/07/95
236	Drg. No. 2217328	Sheet 6 OF 9	Rev. 1

Connector J6

Pressure Reducing signal (200 – 800 mA)	1	168	To Pressure Reducing Valve via Boom Manif. Box
Slew Servo Valve Current (LO)	2	NC	
Vertical Servo Valve Spool Feedback	3	145	To Vertical Servo Valve via Main Manifold Box
Vertical Servo Valve Voltage Output	4	144	
Vertical Servo Valve Current Output (HI)	5	NC	
Vertical Servo Valve Current Output (LO)	6	NC	
Vertical Force Feedback signal (HI)	7	243	To Linear Amplifier Card
Vertical Force Feedback signal (LO)	8	244	

Legend
NC = No Connection

Clansman Dynamics Limited

TITLE
Connections to Manipulator Control Card – MOOG 641

Scale NTS	Drawn JW	Approved	Date 18/07/95
236	Drg. No. 2217328	Sheet 7 OF 9	Rev.

Connector J7

Horizontal Servo Valve Spool Feedback	1	141	To Horizontal Servo Valve via Main Manifold Box
Horizontal Servo Valve Voltage Output	2	140	
Horizontal Servo Valve Current Output (HI)	3	NC	
Horizontal Servo Valve Current Output (LO)	4	NC	
Horizontal Force Feedback signal (HI)	5	241	To Linear Amplifier Card
Horizontal Force Feedback signal (LO)	6	242	
Horizontal Force Reduction Backward	7	196	To Lower Horizontal Force Reduction Solenoid
	8	NC	

Clansman Dynamics Limited

TITLE
Connections to Manipulator Control Card – MOOG 641

Scale NTS	Drawn EW	Approved FED	Date 01/02/95
236	Drg. No. 2217328	Sheet 8 OF 9	Rev.

Connector J8

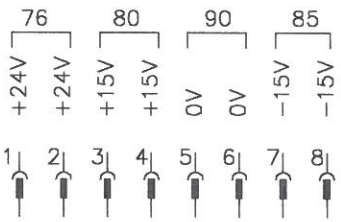

Legend
NC = No Connection

Clansman Dynamics Limited

TITLE
CONNECTIONS TO MANIPULATOR
CONTROL CARD – MOOG 641

Scale NTS	Drawn JW	Approved	Date 4/10/98
236	Drg. No. 2217328	Sheet 9 OF 9	Rev.

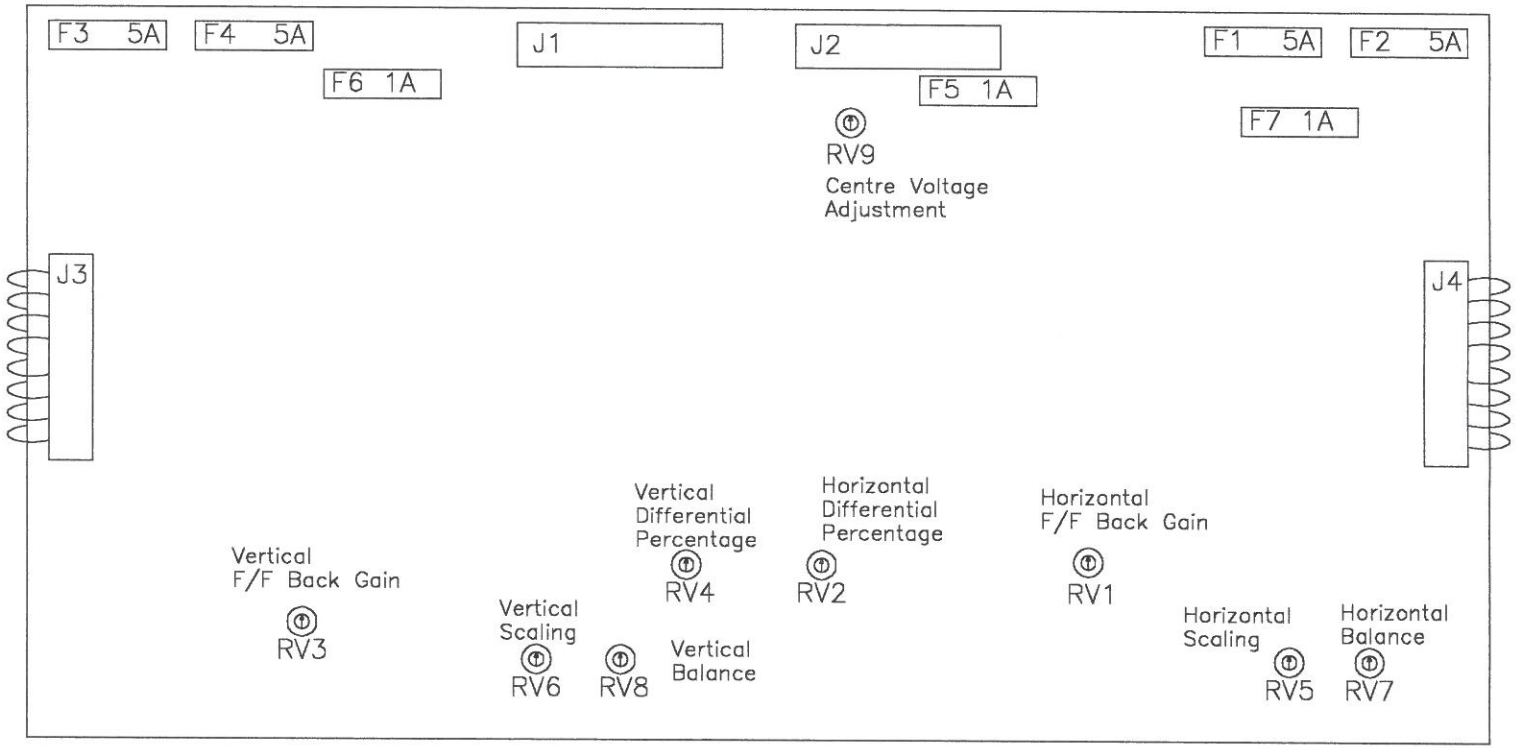

Clansman Dynamics Limited

TITLE
Connections to Linear Amplifier Card (Version 2)

Scale NTS	Drawn JW	Approved	Date 25/07/95
60:\002	Drg. No. 1217084	Sheet 01 OF 02	Rev.

J1

+24v	1	70	from terminals
+24v	2	70	from terminals
0v	3	90	from commoned terminals
0v	4	90	
Amplifier Input	5	244	Vertical F/Feedback signal from main Control Card
	6	243	
Amplifier Output	7	234	Power Output to Vertical Motor
	8	233	

J2

+15v	1	80	from terminals
0v	2	90	from terminals
−15v	3	85	from terminals
Amplifier Input	4	242	Horizontal F/Feedback signal from main Control card
	5	241	
Amplifier Output	6	232	Power Output to Horizontal Motor
	7	231	
Enable	8	193	Enable signal from Main Control Card

Clansman Dynamics Limited

TITLE
Connections to Linear Amplifier Card (Version 2)

Scale NTS	Drawn JW	Approved	Date 25/07/95
60:\003	Drg. No. 1217084	Sheet 02 OF 02	Rev.

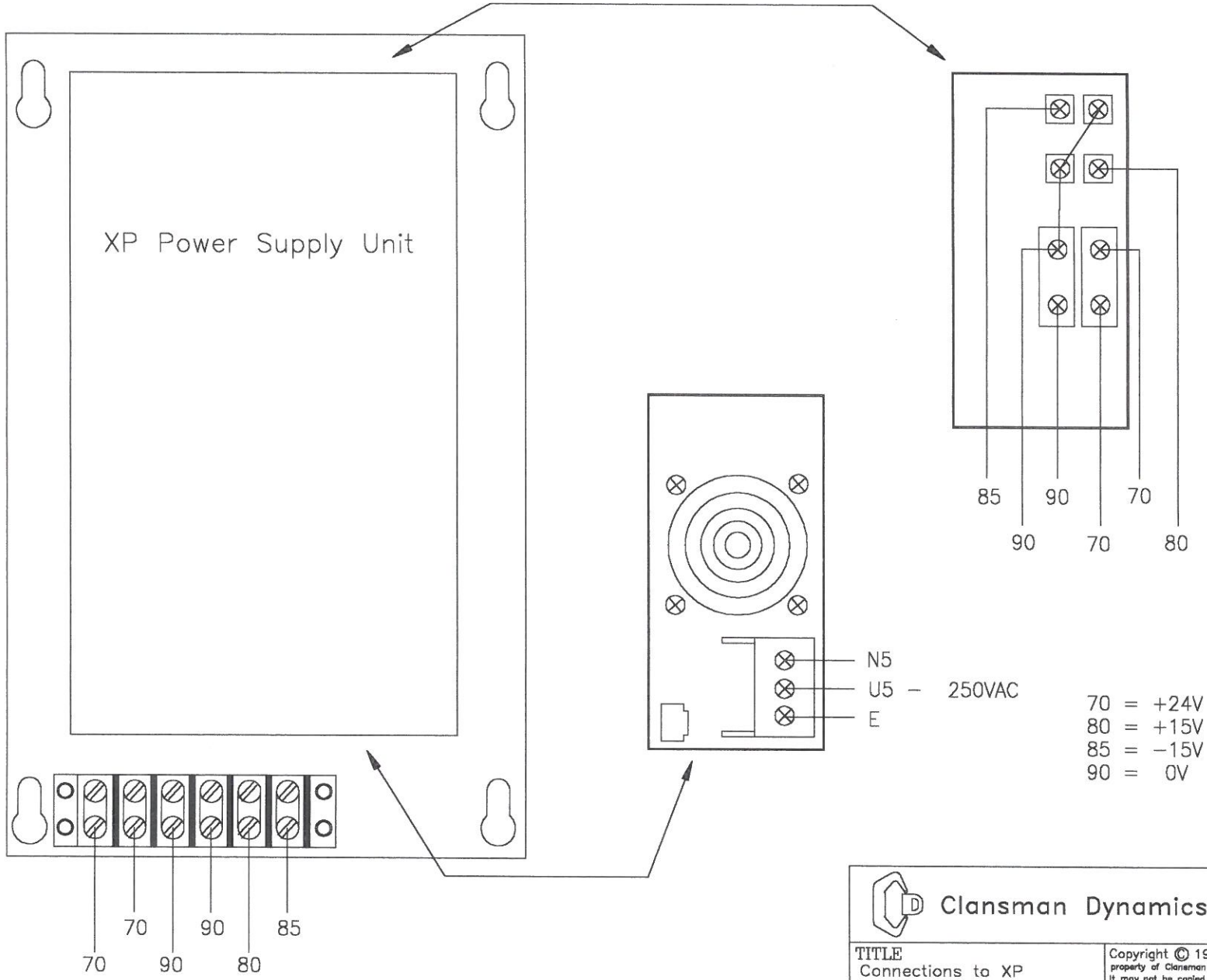

Clansman Dynamics Limited

TITLE
Connections to XP
+24/+15/−15V supply

Scale NTS	Drawn JW	Approved FED	Date 4/10/98
215	Drg. No. 2217286	Sheet 1 OF 1	Rev.

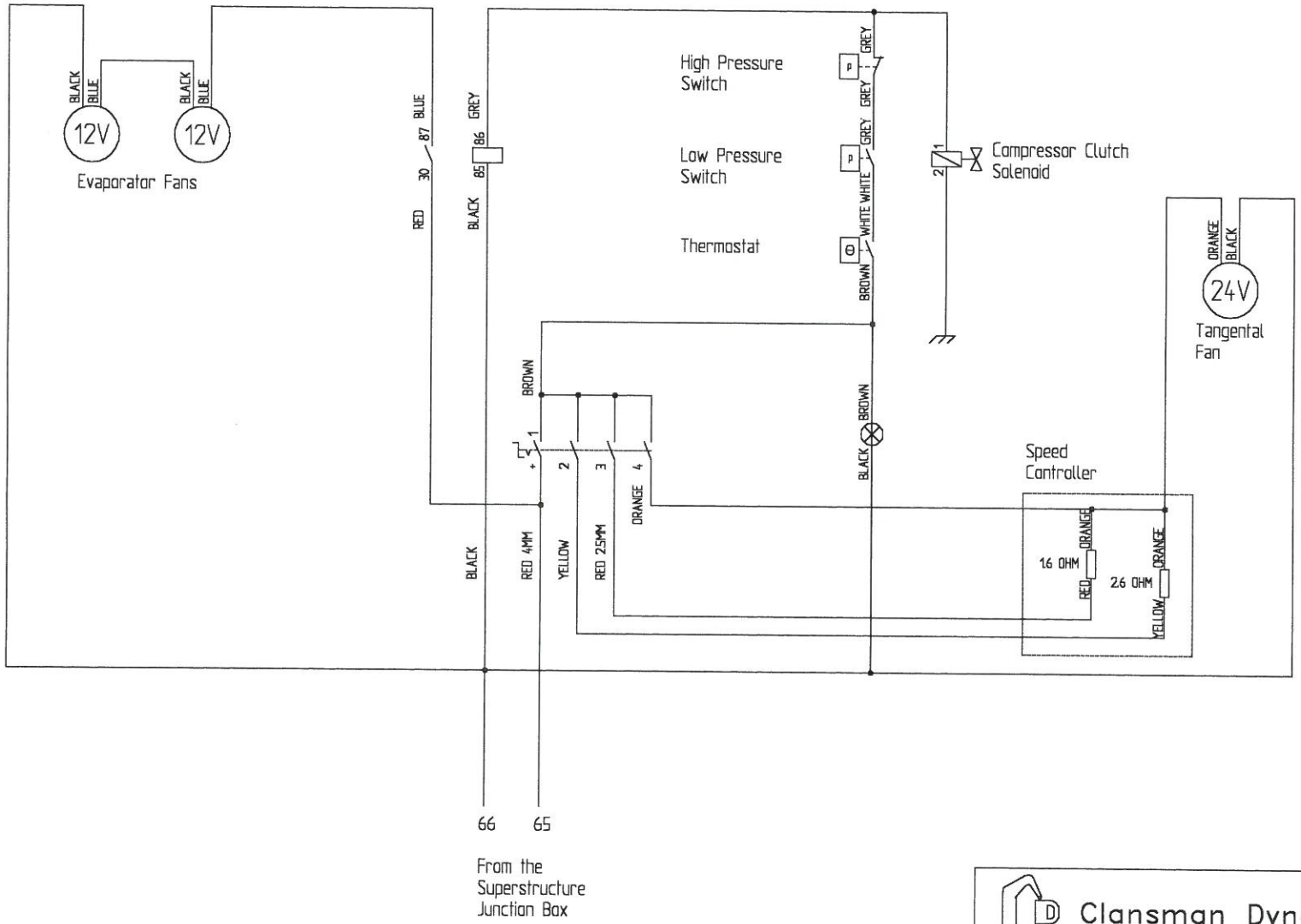

Clansman Dynamics Limited

TITLE
CONNECTIONS TO Air conditioning Unit

Scale NTS	Drawn JW	Approved	Date 18/07/95
e:\DWG	Drg. No. 2217423	Sheet 1 OF 1	Rev.

This is version 12 of Goulds pumps latest edit 06/04/99

Setup timer to act as a clock for the ramp function. In this case the clock has a period of 50HZ
The timer is started here and resets itself, when the time period is finished

0000

clock for ana. ramp

RTO
Retentive Timer On
Timer T4:1
Time Base 0.01
Preset 3<
Accum 0<
EN
DN

Read the analog input from the joystick. This is a small signal (approx +/-1V) so it has to be multiplied (in this case by 5X) to bring it up to a usable level. This means however that if a signal comes in which is greater than around 2 V, the controller would stop, indicating a register overflow fault. So this signal is checked to see if it is over 6000 bits (before multiplication of 5X) and if it is over, it is limited to 30,000 bits (after multiplication) The overflow condition would occur at 32768 bits.

0001

LES
Less Than (A<B)
Source A I:0.4
-48<
Source B 5000
5000<

stop o/flow 1
B3:0
11

0002

GRT
Greater Than (A>B)
Source A I:0.4
-48<
Source B -5000
-5000<

stop o/flow 2
B3:0
12

0003

stop o/flow 1
B3:0
11

stop o/flow 2
B3:0
12

MUL
Multiply
Source A I:0.4
-48<
Source B 5
5<
Dest N7:19
-240<

0004

DIV
Divide
Source A I:0.5
1177<
Source B 3
3<
Dest N7:20
392<

0005

ADD
Add
Source A N7:19
-240<
Source B N7:20
392<
Dest N7:18
152<

0006

stop o/flow 1
B3:0
11

MOV
Move
Source 30000
30000<
Dest N7:18
152<

0007

stop o/flow 2
B3:0
12

MOV
Move
Source -30000
-30000<
Dest N7:18
152<

Read joystick register and put into N7:1 ie go at full speed if no stop or slowdown exists.

0008

Carriage slowdown
B3:0
10

slowdown
to zero
B3:0
3

MOV
Move
Source N7:18
152<
Dest N7:1
152<

If a slowdown condition occurs, read joystick register, divide by 4 and put into N7:1
for low speed trolley travel (ie slow down to quarter speed).

0009

Carriage slowdown
B3:0
10

slowdown
to zero
B3:0
3

DIV
Divide
Source A N7:18
152<
Source B 4
4<
Dest N7:1
152<

If slowdown to zero signal occurs, transfer zero into N7:1 for zero trolley speed
ie a controlled, ramped stop (not a crashing E/stop)

0010

slowdown
to zero
B3:0
3

MOV
Move
Source 0
0<
Dest N7:1
152<

To create the ramp, we look to see if the signal from the joystick (I:0.4) is greater or less than it was the last time it was read. If is is greater, the value of N7:3 is incremented by 200 bits every time period until it becomes the same as N7:2

0011

T4:1
DN

MOV
Move
Source N7:1
152<
Dest N7:2
152<

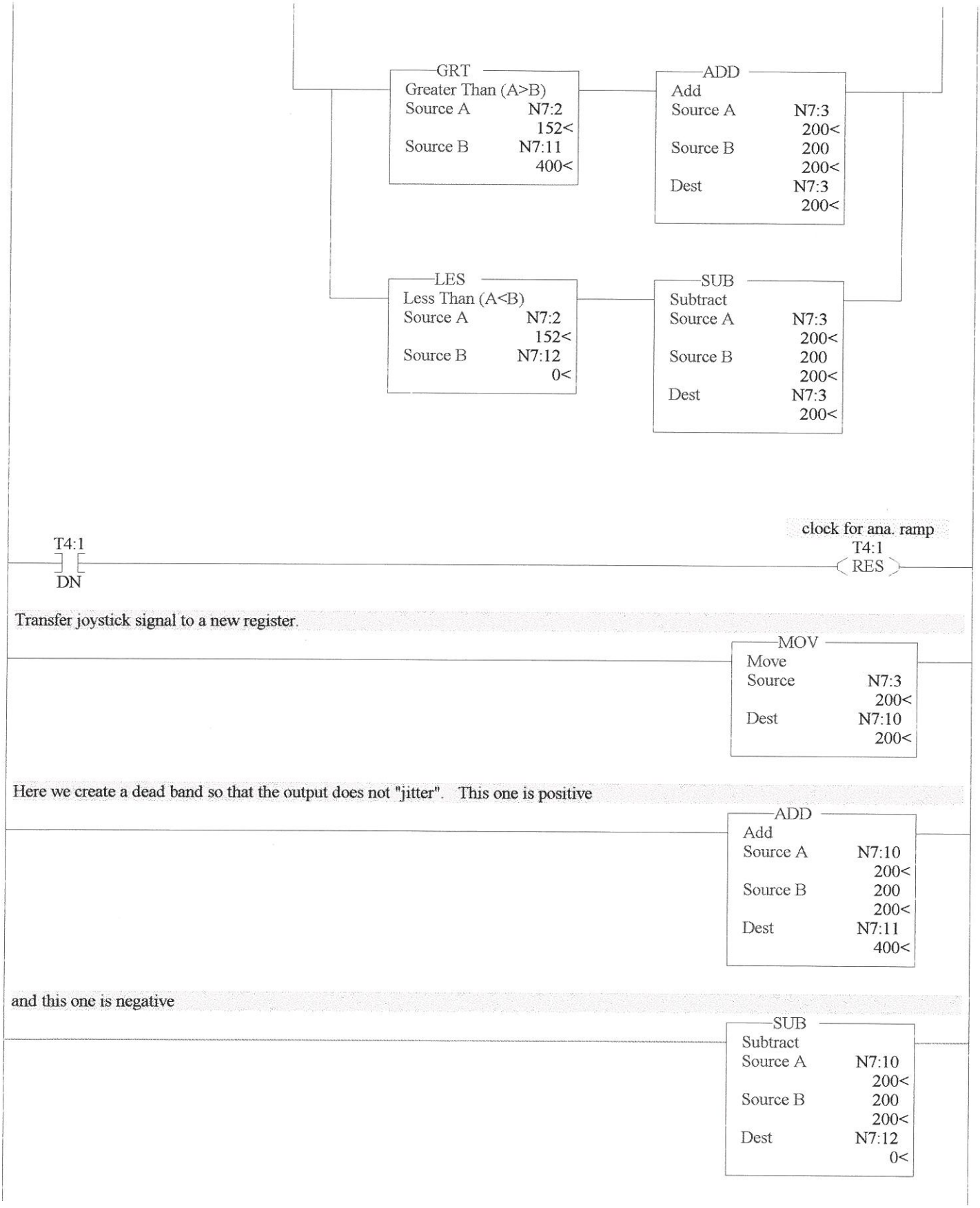
GRT
Greater Than (A>B)
Source A N7:2
152<
Source B N7:11
400<
ADD
Add
Source A N7:3
200<
Source B 200
200<
Dest N7:3
200<
LES
Less Than (A<B)
Source A N7:2
152<
Source B N7:12
0<
SUB
Subtract
Source A N7:3
200<
Source B 200
200<
Dest N7:3
200<
0012
T4:1
DN
clock for ana. ramp
T4:1
RES
Transfer joystick signal to a new register.
0013
MOV
Move
Source N7:3
200<
Dest N7:10
200<
Here we create a dead band so that the output does not "jitter". This one is positive
0014
ADD
Add
Source A N7:10
200<
Source B 200
200<
Dest N7:11
400<
and this one is negative
0015
SUB
Subtract
Source A N7:10
200<
Source B 200
200<
Dest N7:12
0<

Here we look to see if the signal is positive or negative. If it is negative, B3:0/1 will energise a direction relay which will reverse the output to the servo valve, because the output is unipolar, and we need to move in both directions.

0016

LES
Less Than (A<B)
Source A N7:10
200<
Source B 0
0<

fwd/back
B3:0
1

Now to see if the joystick is over a certain value since it is preferable that the carriage blocking valve is not energised and does not chatter when the joystick is in the centre position.

0017

GRT
Greater Than (A>B)
Source A N7:13
200<
Source B 1500
1500<

carriage "go"
B3:0
2

We have to turn the +/- joystick signal into a modulous (or unsigned) version of the signal by transferring the inverted part of the signal into another joystick register...

0018

fwd/back
B3:0
1

NOT
NOT
Source N7:10
200<
Dest N7:13
200<

or the true version, depending on the state of the direction bit.

0019

fwd/back
B3:0
1

MOV
Move
Source N7:10
200<
Dest N7:13
200<

Now transfer the speed modulous signal to O:0.4 to drive the servo valve.

002

MOV
Move
Source N7:13
200<
Dest O:0.4
200<

06/04/99
The Vertical POT signal must be checked that it's less than 0V before the carriage can move.

0021

LES
Less Than (A<B)
Source A I:0.6
-28140<
Source B 0
0<

Vertical OK
B3:0
14

Now the digital part of the programme. The blocking valve for the carriage will be able to move when:

A	The carriage unblock signal is asserted along with no limit detected. B3:0/9
B	The emergency stop is not pressed. (I:0/0)
C	The manipulator has control on. (I:0/1)
D	The upper boom of the manipulator is lowered. (I:0/3)
E	The manipulator slew is centered.
F	The manipulator has permission from Klosters to move..

The loss of conditions B, C or G will cause a "crash" stop, dropping out the blocking valve.
The loss of conditions, D, E or F will cause a controlled stop to zero speed.

0022 — Carriage move B3:0 9 | Em Stop I:0 0 1761-Micro-Discrete | Control on I:0 1 1761-Micro-Discrete → carriage unblock B3:0 13

0023 — carriage unblock B3:0 13 → Carriage unblock O:0 4 1761-Micro-Discrete

0024 — Slew Centred I:0 2 1761-Micro-Discrete | Klosters "stop!" I:0 4 1761-Micro-Discrete | Vertical OK B3:0 14 → slowdown to zero B3:0 3

0025 — Forward Limit I:0 5 1761-Micro-Discrete → Forward Limit B3:0 5

0026 — Forward slowdown I:0 6 1761-Micro-Discrete → Forward Slowdown B3:0 6

00[illegible] — Backward Limit I:0 7 1761-Micro-Discrete → Backward Limit B3:0 7

0028 — Backward slowdown I:0 8 1761-Micro-Discrete → Backward Slowdown B3:0 8

Forward and Backward limits: B3:0/2 is the request from operator to GO. This is anded with direction (B3:0/1), and with the limit signals
If the operator moves into Forward Limit the carriage will stop but the operator will still be able to move Backward to get out.

0029 — carriage "go" B3:0 2 | fwd/back B3:0 1 | Forward Limit B3:0 5 → Carriage move B3:0 9
fwd/back B3:0 1 | Backward Limit B3:0 7

LAD 2 - MAIN_PROG --- Total Rungs in File = 36

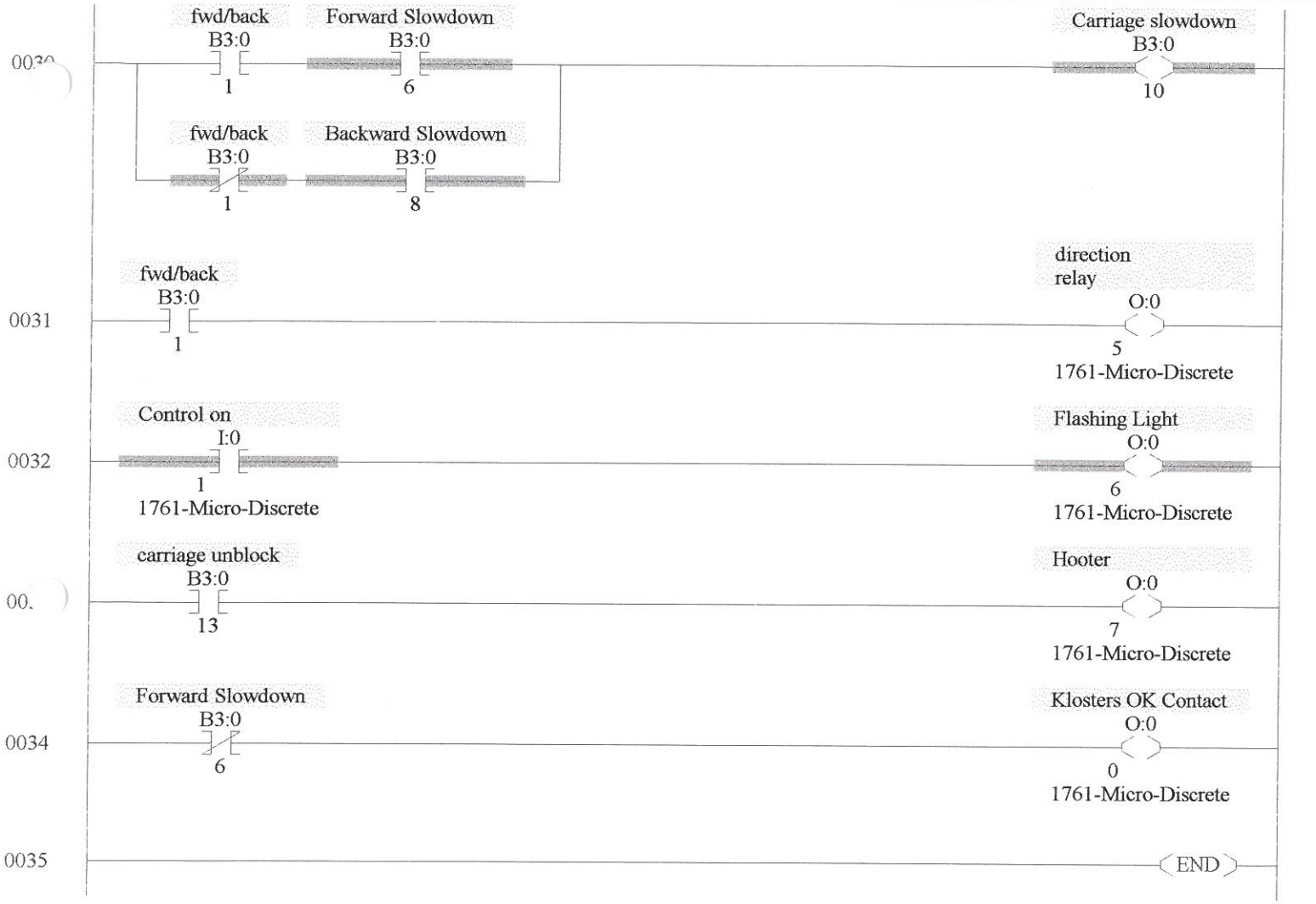

Clansman Dynamics			
Customer CDL project no. Machine size	Client CDL Nº de projet Taille de la machine		ITT Goulds Pumps PA 14 C3010E3/2
Mechanical equipment data sheet Feuilles de données de l'équipement mécanique Tekniska data - Mekanisk utrustning			
Horizontal cylinder	**Cylindre horizontal**	**Horisontell cylinder**	
Manufacturer	Fabricant	Tillverkare	Parker
Model	Modèle	Modell	
Number	Numéro	Antal	PI00070285
Vertical cylinder	**Cylindre vertical**	**Vertikal cylinder**	
Manufacturer	Fabricant	Tillverkare	Parker
Model	Modèle	Modell	HSM700-101/5
Number	Numéro	Antal	PI00070585
Pitch cylinder	**Cylindre de tangage**	**Cyl.för höjnings-o.sänkningsrörelse**	
Manufacturer	Fabricant	Tillverkare	Parker
Model	Modèle	Modell	
Number	Numéro	Antal	PI00073038
Gripper cylinder	**Cylindre de la pince**	**Griparcylinder**	
Manufacturer	Fabricant	Tillverkare	Parker
Model	Modèle	Modell	
Number	Numéro	Antal	PI00070106
Slew motor	**Moteur de rotation**	**Motor för vridrörelse (axel 1)**	
Manufacturer	Fabricant	Tillverkare	Poclain
Model	Modèle	Modell	MS18-8-111-A18-2A50-0000
Code	Code	Kod	007543772C
Series	Gamme	Serie	
Number	Numéro	Antal	52203
Yaw motor	**Moteur de couple**	**Motor för svängningsrörelse**	
Manufacturer	Fabricant	Tillverkare	Poclain
Model	Modèle	Modell	MSE18-2-1111-A18-0000-0000
Code	Code	Kod	009543712A
Series	Gamme	Serie	
Number	Numéro	Antal	52459
Roll motor	**Moteur de roulis**	**Motor för vridrörelse (Axel 6)**	
Manufacturer	Fabricant	Tillverkare	Poclain
Model	Modèle	Modell	MS18-2-111-A18-0000-0000
Code	Code	Kod	004843760G
Series	Gamme	Serie	
Number	Numéro	Antal	52425

Line No		Drg/Part	Description	Qty
5		0102144	Trolley Assembly	
6	ITEM			
7	1	1102088	Trolley	1
8	2	1102155	P/pack support	1
9	3		Capscrew M20 x 40	4
10	4	1102192	RH Axle Box	2
11	5		Capscrew M30 x 110	16
12	6	1102191	LH Axle Box	2
13	7		Capscrew M30 x 110	16
14	8	1102190	Trolley Wheel	4
15	9	1102134	drive shaft	2
16	9a	1102134	Spline drive shaft	2
17	9b	1102134	Nitride drive shaft	1
18	10	1102140	Brake shaft	2
19	10a	1102140	Spline brake shaft	1
20	10b	1102140	Nitride brake shaft	1
21	11		Key 20sq' x 85 long	4
22	12	1102139	Shaft end cap	4
23	13		Capscrew M12 x 30	16
24	14	1103299	Cover	4
25	15		Hex Bolt M10 x 30	12
26	16		Bearing 22217E	4
27	17	1110188	Seal retaining plate	2
28	18		'O' ring 211 dia x 2.6 section (BS172)	4
29	19		'O' ring 173 dia x 2.6 section (BS166)	2
30	20	2310027	Hydrabase MSE05	2
31	21	2402040	Capscrew M12 x 120	20
32	22		Seal 100 x 85 x 6 - R3 (ECOPUR)	4
33	23	1102137	Inner Spacer	4
34	24		Cable chain 4m,2x end pieces	1
35	25		Capscrew M10 x 25	8
36	26		Front bumper	0
37	27		Bolts for above	0
38	28		Rear bumper	0
39	29		Bolts for above	0
40	30		Servo valve 4693-294-906	1
41	31	1316219	Trolley Manifold	1
42	32	1316224	Sandwich block slew	1
43	33		Brake Manifold (Cetop3 x 1station) 3/4" SAE ports	1
44	34		Dir. Contr. valve 4D02-34-103-01-00B1-GOQ-327	1
45	35		Check valve CXCD-XAN	2
46	36		Grubscrew M4 x 6, drilled 0.6mm	1
47	37		Pres. relief valve RDDA-CAN 150 bar	2
48	38		Hand valve DVP 06, UK804477	1
49	40	1102193	Brakeseal Plate	2
50	41	1102136	Outer spacer	4
51	42		Bearing 22216E	4
52	43		Seal 2216 AV	4
53	44		Seal 2217AV	4
54	45		ERP/CPS flat form cable, 4 core x 25 x 12m long	1
55	46		Flatform cable 12 core x 12m long	
56	47		FC2 cable gland to suit above	3

Line No		Drg/Part	Description	Qty
57	48	1102149	Cable chain anchor plate	2
58	49	1102150	Cable clamp support brkt	2
59	50	2402033	capscrew M10 x 85	4
60	51		Flow divider YGDB-XAN-NV	1
61	52		Disc brake 008430-88A	2
62	53	2110160	Seal R4-131 x 120 x 4.2	2
63	54		O-Ring 145.7 id x 2.62 BS162	2
64	55		Capscrew M12 x 40	24
65	56		DIR valve 4WE6Y6X/EG24N9K4	1
66	57		P.reducing slice ZDR6DAZ - 4X/25Y	1
67	58		P. Relief slice ZDB6VAZ - 4X/50	1
68	59		Crane bumper	2
69	60	1102153	Long travel buffer	2
70	61	1102157	Trolley manifold support bracket	1
71	62	1102158	Brake manifold support bracket	1
72	63	1102159	Divider valve mounting plate	1
73	64	1102160	Proxy support bracket	1
74	65		Proximity dectector OBT20018GM70-E5-V1	1
75	66	1102161	Step	1
76	67	1102162	Valve protection	1
77	68	1102163	Support for Inductive proxy switch	2
78	69		Inductive proximity switch	4
79	70	1102164	Sensor rail	1
80				
81				
82				
83	Item		Miscellaneous Parts	
84	1	1102088	Material for Trolley	
85	2		Rails for workshop, sect' 56 x 6m long	0
86	3		Rails for customer, sect' 56 x 10.1 long	0
87	4		Rail stops for workshop	0
88	5		Rail stops for customer	0
89	6		Tapped pads	1
90	7		Rail clips	50
91	8		Lifting lugs	0
92	9	1105028	Brake release tool	1
93	10	1102165	Trolley frame for shipping	1
94				
95				
96				
97				
98	Item	0316295	Hose and Fittings Assembly	
99				
100	1		1.1/16" SAE - 13/16" ORFS m/m	1
101	2		Female run tee 1.11/16" ORFS	2
102	3		Male Plug 3/4" SAE	3
103	4		1.1/16" SAE - 1.3/16" ORFS m/m	3
104	5		1/2" BSP - 13/16" ORFS m/m	2
105	6		1.3/16" ORFS - 1.11/16" ORFS female swivel	2
106	7		3/4" SAE - 13/16" ORFS m/m	3
107	8		3/4" BSP - 1.3/16" ORFS m/m	1
108	9		3/8" BSP - 11/16" ORFS m/m	2

Line No		Drg/Part	Description	Qty
109	10		3/4" BSP - 13/16" ORFS m/m	4
110	11		M18 x 1.5 - 11/16" ORFS m/m	2
111	12		Female run tee 11/16" ORFS m/m	1
112	13		Female run tee 13/16" ORFS m/m	2
113	14		3/4" SAE - 11/16" ORFS m/m	2
114	15			
115	16		Female branch tee 11/16" ORFS	1
116	17			
117	18		**ALL HOSES TO HAVE A MINIMUM WORKING PRESSURE**	
118	19			
119	20		Hose assy 1/2" bore x 2200 13/16" ORFS 135/90-90deg	1
120	21		Hose assy 3/4" bore x 490 1.13/16" ORFS 135/90-170deg	1
121	22		Hose assy 1/2" bore x 500 13/16" ORFS str/90	1
122	23		Hose assy 3/4" bore x 2800 1.13/16" ORFS str/90	1
123	24		Hose assy 3/4" bore x 2800 1.13/16" ORFS str/90	1
124	25		Hose assy 1/2" bore x 500 13/16" ORFS str/90	1
125	26		Hose assy 1/2" bore x 1850 13/16" ORFS 135/90-90deg	1
126	27		Hose assy 1/2" bore x 370 13/16" ORFS str/90	1
127	28		Hose assy 3/8" bore x 570 11/16" ORFS str/90	1
128	29		Hose assy 3/8" bore x 2150 11/16" ORFS 135/90-90deg	1
129	30		Hose assy 1/2" bore x 3000 13/16" ORFS str/90	1
130	31		Hose assy 3/8" bore x 2680 11/16" ORFS 90/90-in line	1
131	32		Hose assy 3/8" bore x 4420 11/16" ORFS 90/90-in line	1

Line No		Drg/Part	Description	Qty
5		**0102081**	**Base Assembly**	
6	ITEM			
7	1	1102062	Base Fabrication	1
8	2	2102042	Slew Ring Rollix 06-0980-09-ZZ1-0B	1
9	3	1102080	Swivel Support	1
10	4	1102038	Crane Bumper 125190	2
11	5	2405006	Hex Nut M12	
12	7	2410010	Bolt Ret Wire, 302 SS(21SWG 0.032"dia)	3
13	8	2102012	Brush Strip Superseal Dx7ft	3
14	9	2410012	Screws M4x12	27
15	10	2401025	Hex Bolt M20x120 BS3692 Gr8.8	35
16	12	2401009	Hex Bolt M12x40 GR8.8	3
17	13		Spring washer M12	
18	14	1102108	Swivel pipe support bracket	1
19	15			
20	17		90 deg rotary coupling, 1 1/2"BSP - M52 x 2	2
21	18			
22	19			
23	20	2410040	Stauff Single Clamp 538 PPDPAS	2
24	21	2410007	Stauff Single Clamp 542 PPDPAS	1
25	22			
26	25			
27	26	2401025	Hex bolt M20 x 120 Gr 8.8	36
28	27		Drill dia 3 hole in above bolts	36
29	28			
30	29	1102154	Stops	2
31	30	1102084	Cover for hoses	1
32	31	1102076	Transport block	0
33	32	1102079	Transport Plate	2
34				
35				
36				
37		**0103536**	**Booms and superstructure**	
38	ITEM			
39	1	1103645	Superstructure Fabrication	1
40	1a	1103646	Superstructure M/C	1
41	2	1103486	Bearing Cap	2
42	2a		Stauff Single Clamp 542PPPDPAS	
43	2b		Stauff Single Clamp 218SPPPDAS	5
44	2c		Stauff Single Clamp 428SPPPDPAS	4
45	2d		Stauff Double Clamp 320/20SPDPAS	4
46	3		Capscrew Gr12.9 M20x180	8
47	4	2316152	Motor MS18-8	1
48	5	2401026	Hex Bolt M20 x 50	10
49	6	1103287	Pinion	1
50	7	1103288	Retaining Plate	1
51	8	1103272	Vert Boom Bottom Casting	1
52	8a	1103663	Vertical Boom Maching	1
53	8b	1103627	Vert Boom top end casting	1
54	8c	1103663	Vert boom heat treat	1
55	9	1103583	Vertical Link (Top end)	1
56	10	1103488	Vert. Link Bridge	1

Line No		Drg/Part	Description	Qty
57	11	1103659	Pin in Bridge Piece	1
58	12	1103481	Stop Pad	1
59	13	1103273	Crank Casting	1
60	13a	1103628	Crank M/C	1
61	14	1103282	Strut Bridge	1
62	15	1103593	Strut Bottom End	1
63	16	1103494	Cab support raised	1
64	17	1103285	Rocker	1
65	18	1103476	Horizontal Boom	1
66	19	1103622	Horizontal Link	1
67	19a	1103833	Shock absorber casting	1
68	20	1103346	Bearing Eye for Horizontal Link	1
69	21	2410010	Bolt Ret Wire (2M)	2
70	22	1103576	Mtg Plate for Press. Red Valve (rexroth)	1
71	23			
72	24	1103518	Brkt For Main Manifold	1
73	25			
74	26	2401017	Hex bolt M14 x 30	2
75	27	1103655	Bracket for stop pad	1
76	28	2401008	Hex bolt M12 x30	8
77	29		Weld base group 4	20
78	30			
79	31	1103478	Pad Clamp bar	2
80	32	2401011	Hex Bolt M8 x 40	8
81	36		Hex Nut M12	4
82	37	1103521	Cover for Boom Manifold	1
83	38		Hex. Hd Screw M10 x 15	8
84	39		Cap Screw M12 x25	4
85	40		Cap Screw M12 x 20	4
86	41			
87	42	1103182	Bracket for junction box	1
88	43	1103493	Bracket for boom manifold	1
89	44	1103650	Clamp p/t for Dia 50 Kopex	1
90	45		Cap screw M8 x 45	4
91	46		Hex Nut M8	4
92	47	1103359	Lifting eye	1
93	48		Cap Screw M6 x 16	2
94	49		Hex Hd Screw M12 x 25	6
95	50	1103607	Cover for Main Manifold	1
96	51		Hex Head Screw M10 x 12	2
97	52		Hex Hd bolt M20 x 80 (for item 47)	6
98	53			
99	54		RHS 450 x 250 x 16 x 298.5, Grd 43d	1
100	55		RHS 300 x 200 x 16 x 614, Grd 43d	1
101	56		SHS 350 x 350 x 10 x 2420, Grd 43d	1
102	57			
103	58		193.7 o/dx12.5x1791grd 43c/d	1
104	59	1103660	Pin for Vert' Link	1
105	60		Circlip D1400-0650	2
106				
107				
108		**0103872**	**Pin "A" Assembly**	

Line No		Drg/Part	Description	Qty
109	ITEM			
110	1	1103291	Pin A	1
111	2	2411001	Bearing 'A' 22226E	4
112	3	2409001	Seals 6226AV	6
113	4	1103302	Spacer for Vert. Boom pin "A"	1
114	5	2408001	Circlip D1300 2400A	1
115	6	1103300	Spacers :Inner	2
116	7	1103301	Spacers Outer	2
117	8	1103654	Pot end cap	1
118	9	1103649	Cap for Potentiometer at "A"	1
119	10	2103095	Coupling for Pot	1
120	11	2217006	Potentiometer Assembly	1
121	12	1103119	Cover For Pot	1
122	13		Seal 195 x 182 x 6 - R3	1
123	14			
124	15	2602008	1/8" BSPT Str Nipple	4
125	16	2410034	Pan Head M4 x 10	3
126	17	2401007	Hex.Hd Screw M8 x 30	6
127	18	2401001	Hex Hd Screw M10 x 25	2
128	19			
129	20	2410014	Berg clamps plus screws	3
130	21	2410003	Grub Screw M12 x12	1
131	22	2410004	Grub Screw, Cone Point M12x12	1
132	23	2408003	Circlip D1400 1300A	1
133	24	1103513	End Cover	1
134	25	1103303	End spacer	1
135				
136				
137		**0103874**	**Pin "B" Assembly**	
138	ITEM			
139	1	1103492	Pin 'B'	1
140	2	2411003	Bearing B 22313E	2
141	3	2409003	Seals 6313 AV	3
142	4	1103304	Spacer Brg B	2
143	5	1103651	Cap for "Pot" at "B"	1
144	6	1103652	Pot end cap	1
145	7	2103095	Coupling for Pot	1
146	8	2217006	Potentiometer Assembly	1
147	9	1103119	Cover For Pot	1
148	10	1103299	End Cover	1
149	11	2602008	1/8" BSPT Str Nipple	2
150	12	2402015	Cap Screw M8 x 30	3
151	13	2410003	Grub Screws M12 x12	1
152	14	2402006	Cap Screw M8 x 20	2
153	15	2410034	Pan Head M4 x 10	3
154	16	2402002	Cap Screws M8 x 30	3
155	17	2410003	Grub Screw Cone Point M12 x12	1
156	18	2410014	Berg clamps plus screws	3
157	19		Seal 100 x 85 x 6 - R3	1
158	20	2103193	Circlip D1400 0650A	1
159	21	1103305	Spacer	1
160				

Line No		Drg/Part	Description	Qty
161				
162		**0103873**	**Pin "C" Assembly**	
163	ITEM			
164	1	1103307	Pin 'C'	1
165	2	2411004	Bearing 'C' 22318E	1
166	3	2409004	Seals 7318 AVG	1
167	4	2408005	Circlip D 1300 2000	1
168	5	2602008	1/8" BSPT Str Nipple	1
169	6	1103661	Spacer	1
170	7	1103309	Pin End Plate	1
171	8	2401002	Hex.Screw M24 x 50LG	1
172				
173				
174				
175		**0103632**	**Pin "D" Assembly**	
176	ITEM			
177	1	1103316	Pin 'D'	1
178	2	2411002	Bearings D 23122CC/W33	4
179	3			
180	4	2408010	Circlip D1400 1100A	1
181	5	1103319	End spacer	1
182	6	1103603	Spacer Rings Outer	2
183	7	1103604	Spacer Brg D Inner	2
184	8	1103320	End cover	1
185	9	1103317	Bearing Retaining Plate	2
186	10	2602009	1/8" BSPT Str Nipple	2
187	11	2402006	Cap screw M8 x 20	2
188	12	2402006	Cap Screw M8 x 20	6
189	13	2602008	1/8" BSPT Str Nipple	2
190	14	2410003	Grub screw M12 x 12	1
191	15	2410004	Grub Screw Cone Point M12 x 12	1
192				
193				
194				
195		**0103310**	**Pin "E" Assembly**	
196	ITEM			
197	1	1103311	Pin E	1
198	2	2411007	Bearing 22320 E	1
199	3	2409007	Seals 6320 AV	1
200	4	2408006	Circlip D 1300 2300A	1
201	5	2602008	1/8" BSPT Str Nipple	1
202	6	1103517	Spacer	1
203	7	1103309	Pin End Plate	1
204	8	2401002	Hex.Screw M24 x 50LG	1
205	9	1103313	Spacer	1
206				
207				
208				
209		**0103537**	**Pin "F" Assembly**	
210	ITEM			
211	1	1103311	Pin "F"	1
212	2	2411007	Bearings 22320E	1

Line No		Drg/Part	Description	Qty
213	3	2409007	Seals 6320AV	1
214	4	2408006	Circlip D1300 2300 A	1
215	5	2602008	1/8" BSPT Str Nipple	1
216	6	1103517	Spacer	1
217	7	1103309	Pin End Plate	1
218	8	2401002	Hex.Screw M24 x 50LG	1
219	9	1103313	Spacer	1
220				
221				
222		**0103328**	**Pin "G" Assembly**	
223	ITEM			
224	1	1103329	Pin 'G'	1
225	2	2411006	Bearings 22316 E	2
226	3	2409006	Seals 7316 AVG	2
227	4			
228	5	1103330	Spacer	2
229	6	2602008	1/8" BSPT Str Nipple	2
230	7	1103332	Pin End Plate	1
231	8	1103334	End cover-cab side	1
232	9	2402006	Cap screw M8 x 20	2
233	10	1103331	End spacer	1
234	11	2408007	Circlip D 1400 0800A	1
235	12	2402015	Cap Screw M8 x 40	7
236	13	1103333	End cover-pot side	1
237				
238				
239		**0103321**	**Pin "H" Assembly**	
240	ITEM			
241	1	1103322	Pin H	1
242	2	2411004	Bearing 22318E	2
243	3	2409004	Seals 7318 AVG	2
244	4	1103323	Spacer	2
245	5	1103325	Pin end plate	1
246	6			
247	7	2402006	Cap screw M8 x 30	2
248	8	2602008	1/8" BSPT Str Nipple	2
249	9	1103326	End Cover-cab side	1
250	10	2402015	Cap Screws M8 x 40	6
251	11	1103324	End spacer	1
252	12	2408009	Circlip D1400 0900 A	1
253	13	1103327	End cover-pot side	1
254				
255				
256				
257		**0103675**	**Pin "J" Assembly**	
258	ITEM			
259	1	1103336	Pin J	1
260	2	2411005	Bearing J 22322E	1
261	3	2409005	Seals 6322AV	1
262	4	2408008	Circlip D1300 2500A	1
263	5	1103602	Spacer	1
264	6	2602008	1/8" BSPT Str Nipple	1

Line No		Drg/Part	Description	Qty
265	7	1103338	Pin end plate	1
266	8	2401002	Hex.Screw M24 x 50LG	1
267				
268				
269				
270		**0103538**	**Pin "K" Assembly**	
271	ITEM			
272	1	1103620	Pin K	1
273	2	2413005	Rod End K SIQG 80ES	1
274	3	2412001	Bearings K 22316	2
275	4	2103347	Seal 6316AV	1
276	5	2408002	Circlip D1300 1700A	1
277	6	1103332	Pin end plate	1
278	7	1103342	Covers in Crank	2
279	8	2602008	1/8" BSPT Str. Nipple	1
280	9	2402006	Cap screw M8 x 20	2
281	10	2401004	Hex Bolt M8 x 16	6
282	11	1103619	Spacer - cab side	1
283	12	1103617	Spacer - portside	1
284	13	1103331	Spacer for circlip	1
285	14			
286	15	2408007	Circlip D 1400 0800A	1
287				
288				
289		**0103539**	**Pin "L" Assembly**	
290	ITEM			
291	1	1103506	Pin L	1
292	2	1103084	Washer	1
293	3	2103647	Vertical Cylinder, with circlip end - 7"	1
294	4	1103653	Spacer	1
295	5	2602004	1/8" BSP Grease Elbow Fitting	1
296				
297				
298		**0103541**	**Pin "P" Assembly**	
299	ITEM			
300	1	1103340	Pin P	1
301	2	2413005	Rod End P SIQG 80ES	1
302	3	2412001	Bearings P 22316E	2
303	4	2103347	Seal 6316 AV	1
304	5	2408002	Circlip D1300 1700A	2
305	6	1103332	Pin end plate	1
306	7	1103342	Covers in Vertical Boom	2
307	8	2602008	1/8" BSPT Str Nipple	2
308	9	2402006	Cap screw M 8 x 30	2
309	10	2401004	Hex Bolt M8x16	6
310	11	1103467	Spacer - cab side	1
311	12	1103505	Spacer - potside	1
312	14	1103331	Spacer for circlip	1
313	15	2408007	Circlip D 1400 0800A	1
314				
315				
316		**0103540**	**Pin "Q" Assembly**	

Line No		Drg/Part	Description	Qty
317	ITEM			
318	1	1103506	Pin "Q"	1
319	2	1103084	Washer	1
320	3	2103648	Horizontal Cylinder, with circlip end - 7"	1
321	4	1103653	Spacer	1
322	5	2602004	M6 Grease Elbow Fitting	1
323				
324				
325				
326		**0103349**	**Shock Absorber Assembly**	
327	ITEM			
328	1	1103345	Shaft for Spring Housing	1
329	2	2603002	Slydring 2 S57155-1300-10-A 25 x 400 LONG	1
330	3	1103348	End Plate	1
331	4	2603003	Slydring 2 S57254-0631-10-A 20 x 202 LONG	2
332	5	2404002	Disk Spring 125x64x3.5 x8thk NEW POLLY TYPE NOW FITTED. 11031335	64
333	6	1103198	Support washers NO LONGER USED	2
334	7	2602008	1/8" BSPT STr Grease Nipple	1
335	8	2402005	M20 x 70 cap screws	8
336	9	2602004	1/8" BSPT Grease Elbow Fitting	1
337	10	2408014	Circlip D1400 0630 A	1
338	11		GRUB SCREW M12 x 20	1
339				
340				
341		**0110416**	**Pitch Shaft Assembly**	
342	ITEM			
343	1	1110321	Pitch shaft	1
344	2	1110320	Spacer	1
345	3	1103324	End Spacer	1
346	4	1110319	Cover plate	2
347	5	1110350	Lower wrist Machined	1
348	5a	1110317	Lower wrist Fabrication	1
349	6	2411004	Bearing 22318E	2
350	7		Circlip D1300 1900A	1
351	8	1103325	Pin end plate	1
352	9	2402006	Cap screw M8 x 30	2
353	10	1110345	Spacer	1
354	11	2402008	Cap screws M6 x 16	6
355	12	2408009	Circlip D1400 0900 A	1
356	13	1110137	Cylinder pin	1
357	14	2401001	Hex. Hd. screw M10 x 25	1
358	15	2413004	Rod End SIQG63ES	1
359	16	2110301	Pitch Cylinder	1
360	17	1103545	Cylinder Pin (Rear)	1
361	18	1103083	Washer	1
362	19	2602008	1/8" BSPT Str Nipple	2
363				
364				
365		**0110352**	**Upper Wrist Assembly**	
366	ITEM			
367	3	2411005	Bearings 22322E	1
368	5	2409005	Nylos Rings 6322AV	1

Line No		Drg/Part	Description	Qty
369	6	1110349	Seal Retaining Plate	1
370	7	1110125	Upper Wrist Casting	1
371	7a	1110303	Upper Wrist Machined	1
372	7b	1110303	M/c key in upper wrist	1
373	8	1110304	Yaw Pin	1
374	8a	1110304	Spline yaw pin	1
375	9	2602010	1/8" BSP.Pl. plug	2
376	10	2402023	Capscrew M16 x 120	2
377	11	2316154	Hydrabase MSE18-2	1
378	12	2402024	Capscrew M16 x 140	14
379	13	1110144	End plate Yaw Pin	1
380	14	2402002	M8 x 30 Cap Screws	8
381	15	1110146	Top spacer	1
382	19	1110255	Pipe Clamp Bracket	1
383	21	1110351	Bottom cover	1
384	22	2401021	Hex bolt M10 x 40	8
385	29		Seal 136 x 120 x 8 R3(Ecopur) Sealjet	1
386	32		Cap screw M10 x 40	4
387	33	2411007	Bearing 22320E	1
388	43	1110300	Yaw buffer	2
389				
390	47	1110145	Bottom spacer	2
391	55	2602008	1/8" BSPT Str Nipple	4
392	60	2110150	O' Ring 304 id. x 3.53 X-Sect (278)	4
393	61	2110151	O' Ring 253.6 id x 3.53 xsection (274)	2
394	69	2409007	Nylos Ring 6320AV	1
395	70	1110147	Yaw Pin Key 20 x 12 x long - En6A	1
396	72		Stauff single 320 SPPP DPAS	9
397			weld bases group 5	1
398			weld bases group 3	7
399				
400		**0110288/sht.3**	**Roll Axis Assembly**	
401	ITEM			
402		2402014	Cap screw M8 x 40	2
403		2402019	Cap screw M8 x 25	2
404	30	2316153	Hydrabase MS18-2	1
405	31	2402024	Capscrew M 16 x 140	14
406	34	2402023	Capscrew M16 x 120	2
407	36	1110124	Casting-lower wrist pivot	1
408	36a	1110333	Machined lower wrist pivot	1
409	38	1110126	Roll Shaft Casting	1
410	38a	1110315	Roll Shaft Machined	1
411	38b	1110134	Roll shaft shrunk to Drive shaft	1
412	38c	1110134	Assembly chromed	1
413	38d	1110134	Roll shaft assembly ground	1
414	39	2414001	Bearing 32230	1
415	40		Seal 136 x 120 x 8(Seal Jet Ecopur) R3	1
416	41	2410038	Lock Nut- Roll Shaft Ret. KM30	1
417	42	2414002	Bearing 32232	1
418	44	2410039	Tab Washer MB30	1
419	45	2603004	Seals - Sealjet [redacted] 86od x 75 x 4.2 RG	2
420	46	1110252	Seal Retaining Plate	1

Line No		Drg/Part	Description	Qty
421	49	1110266	Drive Shaft	1
422	49a	1110266	Spline drive shaft	1
423	50	1110140	Rotary seal Housing	1
424	51	2110149	Seal (Lower Roll Shaft) 308x295x6 R3	1
425	52	1110246	Extended fitting	2
426	53		Seal MB45 - 514 - NBR (Barnwell)	2
427	55	2602008	1/8" BSPT Str Nipple	4
428	58			
429	59	2402022	Capscrew M16 x 25	5
430	60	2110150	O' Ring 304 id. x 3.53 X-Sect (278)	4
431	61	2110151	O' Ring 253.6 id x 3.53 xsection (274)	2
432				
433				
434		**0103606**	**Centralized Lubrication (Auto)**	
435				
436	1		Supply all parts	0
437	2		Fit all parts	0
438				
439				
440				
441				
442				
443				
444				
445				
446				
447				
448				
449				
450				
451		**0101457**	**Arrangement of grippers**	
452	ITEM			
453	1	1101310	Gripper housing (fab & m/c)	1
454	2	2101309	Gripper Cylinder	1
455	3	1101311	LH finger	1
456	4	1101312	RH finger	1
457	5	1101182	pivot shaft	2
458	6	2413007	GE70ES2RS bearing	4
459	7	1101313	Finger - Lower part	2
460	8	1101187	End cap (pivot shaft)	4
461	9		Capscrew M12 x 30	8
462	10	1101183	Spacer for pivot shaft	16
463	11	1101186	Spacer for locating cover	4
464	12	1101185	Locating cover on gripper housing	4
465	13		Hex hd' bolt M36 x 200	6
466	14		Nut philidas M36	6
467	15	2602008	1/8" BSPT grease nipple	3
468	16	1101384	Link Pin	2
469	17		Circlip D1400 0500A	4
470	18		Circlip D1300-0750	2
471	19		Capscrew M12 x 25	4
472	20	1101184	Screw for lubrication of 16	2

Line No		Drg/Part	Description	Qty
473	21		Bearing GEG50ES	2
474	22			
475	23			
476	24	1101315	cylinder pin	2
477	25			
478	26			
479	27	1101314	Gripper Link	1
480	28		Rod end SIQG50ES	1
481				
482		**0101444**	**Gripper Spring Assembly**	
483	ITEM			
484	30	1101391	Washer	8
485	31	1101445	spacer	8
486	32		cap screw M30 x 200	8
487	33		M30 philidas nut	8
488	34		Disc spring 80x41x5	72
489				
490				
491		**0115106**	**Control Handle Assembly**	
492	ITEM			
493	1	1115063	Control Handle Sub Assy	1
494	1a	1115063	Pair castings	1
495	1b	1115063	Pair castings machined	1
496	1c	1115063	Trigger casting	1
497	1d	1115063	Trigger machined	1
498	2	2402013	Capscrews M6 x 35	2
499	3	1115039	Shaft For Control Handle	1
500	4	1115105	Control Arm	1
501	5	1115038	Bearing Housing	1
502	6	2402007	M6 x 20 Cap Screws	2
503	7	2115018	3203 A2 RSIAngular Contact Brg	1
504	8	1115045	Spacer on Shaft	1
505	9	1115096	Stop lever	1
506	10	1115087	Stop Pad	1
507	11		Pan Head Screw M3 x 16	1
508	12		Hex Nut M3	1
509	13	2410025	Grub Screw M6 x 6	2
510	14			
511	15		C/sk Screw M5 x 10	4
512	16	2115080	Spring T32110	2
513	17		Pan Head Screw M3 x 20	4
514	18		Hex Nut M3	4
515	19			
516	20	2115010	B2-57-S Ball Bearing "Berg"	1
517	21	2115046	Berg clamps SM - 47	3
518	22		M2.5 x 12 Pan Head Screws	3
519	23	2115047	Coupling for Pot	1
520	24	1115030	Flange for Pot on Control Arm	1
521	25	2402009	Capscrews M 6 x 12	2
522	26	2410029	Pan head screws M6 x 25	2
523	27	2405003	Hex Nut M6	2
524	28	2117006	Pot Assembly	1

Line No		Drg/Part	Description	Qty
525	29	2410014	Berg Clamp SQM - 13	3
526	30	1103119	Pot Cover (m/c'd and powder coated)	1
527	31	2410034	Pan hd screw M4 x 10	3
528	32			
529	33			
530	34	2402009	Cap Screws M6 x 12	2
531	35	1115082	Cover	1
532	36	2402009	Capscrews M6 x 10	2
533	37	2405003	M6 Hex Nut	2
534	38	1115088	Arm rest	1
535	39	2401010	Capscrews 'M6 x 16	4
536	40		C/sk Screws M5 x 10	8
537	41	1115095	Leg for Spring	1
538	42		Grub Screw M6 x 6	2
539	43			
540	44			
541	45			
542				
543				
544		**0115085**	**Control Arm Assembly**	
545	ITEM			
546	1	1115019	Support Frame for Control Arm	1
547	2	2401008	M12 x 30 HEX HD Set Srew	8
548	3	1115006	Rework Hepco slideway (2115031unmachined)	1
549	3a	2115031	NC76536 8888 Slideway	1
550	4	2401009	M12 x 40 Hex HD Set Screw	3
551	5	2115007	SJ 54c Journal Assembly	2
552	6	2115008	SJ 54E Journal Assembly	2
553	7	1115020	Slide Plate	1
554	8	1115056	Stopper	1
555	9	2420006	M8 x 20 capscrews	2
556	10	1115028	Clamp for Belt	1
557	11	2401010	M6 x 16 Hex HD Screw	2
558	12	2402005	M3 x 10 Cap Screw	2
559	13	1115027	Stop block	1
560	14	2115090	Shock absorber(725096)	1
561	15	2410030	Pan head M6 x 40 screw	2
562	16	2115091	Shock absorber (725080)	1
563	17	1115015	15T Chain Wheel (Machined)	1
564	17a	2115054	15T unmachined chainwheel	1
565	18	1115062	Collar	1
566	19	1115061	Pin	1
567	20	2410031	Pan head M2.5 x 30	3
568	21	2115046	Hex Nut M2.5	3
569	22	2410017	Grub screwM5 x 6	2
570	23	2115095	Coupling for Pot	1
571	24	2217006	Potentiometer assembly	1
572	25	2410014	Berg Clamp	3
573	26	1103119	Pot Cover (m/c'd & powder coated)	1
574	27	2410034	M4 x 10 panhead	3
575	28	1115060	Flange for Pot	1
576	29	2402009	Cap Screws M6 x 12	3

Line No		Drg/Part	Description	Qty
577	30	1115103	Plate for control arm	1
578	31	2402006	Capscrews M8 x 20	4
579	32	1115104	48T Chain Wheel (Machined)	1
580	32a	2115053	48T chainwheel unmachined	1
581	33	1115026	Collar	1
582	34	2410032	Pan Head M2.5 x 20	3
583	35	2405009	Hex nut M 2.5	3
584	36	2410017	Grub screw M5 x 6	2
585	37	1115058	Block	1
586	38	2402014	Capscrew M8 x 40	2
587	39	1115057	Plate	1
588	40	1115024	Hub	1
589	41	2402009	Capscrews M6 x 12	3
590	42	2115017	3305A-12 RSI Angular Contact Brg	1
591	43	2115033	Circlip D1300 0620	1
592	44	1115023	Spacer	1
593	45	1115021	Hinge Pin for Control Arm	1
594	46	1115099	Key 6x6 x 10	1
595	47	1115059	Hub for Chain Wheel	1
596	48	1115012	60T Chain Wheel (Machined)	1
597	48a	2115035	60T chainwheel unmachined	1
598	49	2410016	M6 x 12 C'sk socket scrs	3
599	50		M16 Hex Nut	1
600	51	2217006	Potentiometer Assembly	1
601	52	2410014	Berg Clamp	3
602	53	1103119	Pot Cover	1
603	54		Pan Head Screws M4 x 10	3
604	55	2103095	Coupling for Pot	1
605	56	2115016	25 CCF-320-E Cable Chain	1
606	57	1115093	Hinge Pin	1
607	58	2115017	3305A - 2 RSI Angular Contact Brg	1
608	59	2115033	Circlip D1300 0620	1
609	60		M16 Hex Nut	1
610	61	1115023	Spacer	1
611	62	1115022	Hub for Chain Wheel and Pot	1
612	63	1115011	72T Chain Wheel (Machined)	1
613	63a	2115034	72T chainwheel unmachined	1
614	64	2410016	M6 x 12 C'sk Socket Screws	3
615	65	1115029	Support Angle	1
616	66	2401010	M6 x 16 Hex Hd Bolts	4
617	67		Motor DC DPM30H4	1
618	68		Cap Screws M8 x 25	3
619	69		Motor DC DPM30H4	1
620	70		Cap Screws M8 x 25	3
621	71	1115098	Rubber Pad	2
622	72			
623	73		Prox Switch OBT 20018 GM 70-E5-V1	1
624				
625				
626				
627				
628				

Line No		Drg/Part	Description	Qty
629				
630		**0115089**	**Control Handle Guards Assy.**	
631	ITEM			
632	1	1115067	Bottom Guard	1
633	2	2402009	Cap screws M6 x 12	4
634	3			
635	4	2407006	Csk screw M5 x 12	2
636	5	2405010	Hex nuts M5	2
637	6	1115068	Guard at roller	1
638	7	2410034	Pan head scres M4 x 10	2
639	8	1115069	Guard at roller	1
640	9	2410034	Pan head scres M4 x 10	2
641	10	1115070	Guard at roller	1
642	11	2410034	Pan head screws M4 x 10	2
643	12	1115071	Guard at roller	1
644	13	2410034	Pan head screws M4 x 10	2
645	14	1115074	Cover at chainwheel	1
646	15	2402015	Cap screws M6 x 30	2
647	16	1115072	Leg for Junction Box	1
648	17	2402009	Cap screws M6 x 12	2
649	18	1115077	Side plate	1
650	19	2402009	Cap screws M6 x 12	3
651	20			
652				
653				
654				
655				
656				
657		**0114033**	**Assembly of Cab**	
658	ITEM			
659	1		Cab + a/c + 6mm glass & handles	1
660	2		Hex Head Screws M12 x 12	4
661	3			
662	4		Seat BB PVC 160242	1
663	5		Seat Support 250/30254 Nova Ht 'Adj'	1
664	6	2410035	Hand Nut M8 x 25	4
665	7	1114016	Arm Rest	1
666	8	1114001	Arm Rest Extension	1
667	9		Hex Head Screw M8 x 30	1
668	10			
669	11	114036	Joystick Support Bracket	1
670	12		Cap Screws M6 x 12	4
671	13		Hex Nut M6	4
672	14			1
673	15		Cap Screws M6 x 12	4
674	16		Cab Light	1
675	17			
676	20		Airduct superflex x 5m	0
677	21	1115081	Plate for Push Buttons	1
678	22	2217194	Label for Operators Panel	1
679				
680				

Line No		Drg/Part	Description	Qty
681				
682				
683		**0316286**	**Hydraulic Circuit Components**	
684	ITEM			
685	1	2316042	Dir.Control Valve 4D02, Design B	1
686				
687	2	2316042	Dir.Control Valve 4D02, Design B	1
688				
689	3	2316042	Dir.Control Valve 4D02, Design B	1
690				
691	4	2316043	Servo Control Valve 641F229C (158l/min @ 70bar)	1
692				
693	5	2316007	Servo Control Valve 641F229C (158l/min @ 70bar)	1
694				
695	6	2316007	Servo Control Valve 641F229C (158l/min @ 70bar)	1
696				
697	7	2316044	A/B >T Relief Cart' Valve RDDA-CAN-160 bar	1
698				
699	8	2316044	A/B >T Relief Cart' Valve RDDA-CAN-160 bar	1
700				
701	9	2316045	X-Line Relief Cart' Valve RDDA-CAN-160 bar	1
702				
703	9a	2316045	X-Line Relief Cart' Valve RDDA-CAN-160 bar	1
704				
705	14		Slew check valve CXCG-XAN	2
706	15		M4 x 6 orifice . 8mm	1
707	11	2316044	A/B >T Relief Cart' Valve RDDA-CAN-35 bar	1
708				
709	12	2316044	A/B >T Relief Cart' Valve RDDA-CAN-160 bar	1
710				
711	16	2316044	Main System Relief Valve RDFA-CAN-160 bar	2
712				
713	17	2316048	Shut Off Valve DVP 06 01-X	1
714				
715	19	1316225	Main Manifold (SAE & Moog)	1
716		1316223	Sandwich block horiz	1
717		1316226	Sandwich block vert	1
718		1316224	Sandwich block Slew	1
719		1316222	Sandwich for Main Press.Relief	1
720	20	2316008	Dir.Control Valve AMW 4D61 24vac	1
721				
722	21	2316050	Dir.Control Valve AMW 4D61 24vac	1
723				
724	22	2316050	Dir.Control Valve 4WE 6 E61/EG24N9K4	1
725				
726	23	2316050	Dir.Control Valve 4WE 6 E61/EG24N9K4	1
727				
728	24	2316050	Flow Control Valve Z2FSK6-2-1X/2QV	1
729				
730	25	2316050	Flow Control Valve Z2FSK6-2-1X/2QV	1
731				
732	26	2316050	Flow Control Valve Z2FSK6-2-1X/2QV	1

Line No		Drg/Part	Description	Qty
733				
734	27	2316052	X-Line Relief Valve Sandwich Z2DB6VD2-4X/315	1
735				
736	28	2316052	X-Line Relief Valve Sandwich Z2DB6VD2-4X/315	1
737				
738	29	2316053	A & B to T Relief Valve Sand' Z2DB6VC2-4X/315	1
739				
740	30	2316053	A & B to T Relief Valve Sand' Z2DB6VC2-4X/315	1
741				
742	31	2316054	Anti-Cavitation Check Valve Sand' CXDA-XAN-GDX	1
743				
744	32	2316055	Anti-Cavitation Check Valve Sand' CXDA-XAN-GDX	1
745				
746	33	2316013	Pressure Reducing Valve DRE10-5X/200YG24K4	1
747				
748	33a		P/R valve subplate G461/01	1
749	34		Flow Control Valve Z2FSK6-2-1X/2QV	1
750	39		Boom Manifold, Cetop 3, 4Stn, SAE	1
751	43		P.O. directional valve, DFCB 8DN	2
752	43a		Directional valve DAAA-MHN - 224 (Coil Included)	2
753	44		Sun Relief Valve RDDA CAN-35Bar	2
754	46		Pressure reducing slice ZDR6DA24X150Y	1
755	47		Flow control valve Z2FSK6-21x/2QV	0
756				
757				
758				
759				
760				
761				
762				
763				
764				
765				
766				
767				
768				
769				
770				
771				
772				
773	ITEM		**Hydraulic Powerpack Assembly**	1
774			SEE BERENDSEN DRG NO 6821 & P/LIST	
775				
776				
777				
778				
779				
780				
781				
782				
783				
784				

Line No		Drg/Part	Description	Qty
785				
786				
787				
788				
789				
790				
791				
792				
793				
794				
795				
796				
797				
798				
799				
800				
801				
802				
803				
804				
805				
806				
807				
808				
809				
810				
811				
812				
813				
814				
815				
816				
817				
818				
819				
820				
821				
822				
823				
824				
825				
826				
827				
828				
829				
830	34		Accumulator Assembly (20L)	1
831			SB330-20-A1/112 AB 280A	
832				
833				
834				
835		**0316296**	**Hose & Fittings Assembly**	
836	ITEM			

Line No		Drg/Part	Description	Qty
837	1		1.5/16SAE- 1.7/16 ORFS m/m	8
838	2		1.1/16 SAE- 1. 3/16 ORFS m/m	1
839	3		1.5/16 SAE-1.3/16 ORFS m/m	3
840	4		1.1/2" BSP - 1.11/16" m/m	2
841	5		M22 x 1.5 - 11/16" m/m	3
842	6		1.1/16" SAE - 11/16" ORFS m/m	4
843	7		1.5/16" SAE - 1.11/16" ORFS m/m	2
844	8		1/2" BSP - 11/16" ORFS mm adaptor	2
845	9		13/16 ORFS female branch Tee	1
846	10		3/4" SAE plug	2
847	11		1/4" BSP - 13/16" ORFS m/m	1
848	12		3/4 SAE-11/16 ORFS m/m	7
849	13		3/4" SAE 6000 flange block, 3/4" BSP female	4
850	14		3/4" BSP - 11/16" ORFS m/m	4
851	15		3/4" SAE 6000 split flange kit	2
852	16		1.1/16" ~~ORFS~~ SAE - 13/16" ORFS m/m	2
853	17		3/4" SAE - 1.3/16" ORFS m/m	2
854	18			
855	19		3/4" SAE - 13/16" ORFS m/m	4
856	20			
857	21			
858	22			
859	23			
860	24			
861	25			
862	26			
863	27			
864	28			
865	29			
866	30			
867	31			
868	32			
869	33			
870	34			
871	35			
872	36			
873	37			
874	38			
875	39			
876	40			
877	41		14m thermoplastic hose - 1/2" bore	1
878	42			
879	43			
880	44			
881	45			
882	46			
883	47			
884	48			
885	49			
886	50		Hose Assy-1"Bore x 1670	1
887			1.7/16 - 135/90 ORFS - 20 deg - s/arm	
888	51		Hose Assy-1" Bore x 2020	1

Line No		Drg/Part	Description	Qty
889			1.7/16-135/90 ORFS - 60 deg - s/arm	
890	52		Hose Assy-1" Bore x 750	1
891			1.7/16-90/90 ORFS - 270 deg - s/arm	
892	53		Hose Assy-1" Bore x 1000	1
893			1 7/16 str/90 ORFS - s/arm	
894	54		Hose Assy -1.1/4" Bore x 1850 - multispral	1
895			1.11/16 - M52 x 2 str/90	
896	55			
897				
898	56		Hose Assy-3/4" Bore x 5500	1
899			1.3/16 - 90/135 ORFS - 180 deg	
900	57			
901				
902	58			
903				
904	59			
905				
906	60		Hose Assy 3/4" x 1480	1
907			1.3/16 Str - 3/4 SAE 6000 Flange-90	
908	61		Hose Assy 3/4" Bore x 1700	1
909			1.3/16 ORFS Str - 3/4 SAE 6000 flange-90	
910	62			
911				
912	63		Hose Assy 1 1/4" Bore x 1900, double wire	1
913			1.11/16 90 - M52 x 2 str	
914	64			
915				
916	65		Hose assy 3/8 bore x 1260	1
917			11/16" ORFS 90/str	
918	66		Hose Assy 3/4" Bore x 5500	1
919			1.3/16" ORFS 90/135 - 180 deg	
920	67		Hose Assy 3/8" Bore x 3850	1
921			11/16" ORFS str/135 - 2620 s/arm	
922	68			
923				
924	69			1
925				
926	70		Hose Assy 3/8" Bore x 2900	1
927			11/16" ORFS str - 13/16" ORFS 90 - 1600 s/arm	
928	71			1
929				
930	72		Hose Assy 3/8" Bore x 2600	1
931			11/16" ORFS str/135 - s/arm	
932	73		Hose 1/2" Bore x 1750	1
933			13/16" ORFS str/135 - s/arm	
934	74		Hose Assy 1/2" Bore x 2150	1
935			13/16" ORFS str/90 - s/arm	
936	75		Hose Assy 3/8" Bore x 2600	1
937			11/16" ORFS str/str - s/arm	
938	76		Hose Assy 3/8" Bore x 2600	1
939			11/16" ORFS str/str - s/arm	
940	77		Hose Assy 3/8" Bore x 1600	1

Line No		Drg/Part	Description	Qty
941			11/16" ORFS str/90 - s/arm	
942	78		Hose Assy 3/8" Bore x 1600	1
943			11/16" ORFS str/90 - s/arm	
944	79		Hose Assy 3/8" Bore x 1400	1
945			11/16" ORFS str/135 - s/arm	
946	80			
947				
948	81			
949				
950	82		Hose Assy 3/8" Bore x 1680	1
951			11/16" ORFS str/90 - s/arm	
952	83			
953				
954	84		Hose Assy 3/8" Bore x 1000	1
955			11/16" ORFS 90/135 - s/arm - in line	
956	85		Hose Assy 3/8" Bore x 600	1
957			11/16" ORFS 90/135 - s/arm - in line	
958	86			
959				
960	87		Hose Assy 1/2" Bore x 5500	
961			13/16 str/135 ORFS	
962	88			
963				
964	89			
965				
966	90			
967				
968	91		Hose Assy 1 1/4" Bore x 5000 - multi spirol	1
969			1.11/16 ORFS str/90	
970	92		Hose Assy 1 1/4" Bore x 5000 - multi spirol	1
971			1.11/16 ORFS str/90	
972	93			
973				
974	94			
975				
976				
977				
978				
979	ITEM	**0114025**	**Arrangement of Air Conditioning**	
980	1			
981	2	2114029	KIA-4100 Air Conditioner, kit 9424	1
982	3	2114030	SD7H15 Compressor Model 7863	1
983	4	1114039	Support Bracket for Compressor	1
984	5	2114026	Motor, 5 HP, Nema 112 (480v 3ph 60hz)	1
985	5a	2114027	V Pulley Cat No 031A0281	1
986	6		Taperlock Bush to suit above motor	1
987	7	1114021	Mod to Cab Roof	1
988	8	1114038	Support Plate for Drive (Nema Motor)	1
989	9		Shock Absorber "RS" 688-436	4
990	10		Bracket for conduit	1
991	11	2402032	M10 x 50 Cap Screws	4
992	12	2401001	M10 x 25 Hex Hd Screws	4

Line No		Drg/Part	Description	Qty
993	13	2401001	M10 x 25 Hex Hd Screws	4
994	14	2401021	M10 x 40 Hex Hd Screws	2
995	15		M10 Hex Nuts	2
996	16	2402032	M10 x 50 Cap Screws	2
997	17		M10 Hex Nuts	4
998	18	2402033	M10 x 60 Hex Hd Screws	2
999	19		M10 Hex Nuts	4
1000	20	1114022	Cover over Air-con Drive	1
1001	21	2401004	M8 x 16 Hex Hd Screws	4
1002	22	2401011	M8 x 40 Hex Hd Screws	4
1003	23	2114028	A Section "V" Belt A1130	1
1004	24	1114031	Frame for Air Con. Unit	1
1005	25	2114032	Shock Absorber 237-1821	4
1006	26	RT500UB	Transformer, 500VA, 240 - 24	
1007	27	LC1D1810B5	Block contactor	
1008	28	LR2D1321	Overload Relay	
1009		183 4163	35A, Single Phase Bridge Rectifier (RS)	
1010				
1011				
1012		***ELECTRICS***		
1013				
1014		**PA14**	**Motor Starter Panel**	1
1015	1			
1016	2			
1017	3			
1018	4			
1019	5			
1020	6			
1021	7			
1022	8			
1023	9			
1024	10			
1025	11			
1026	12			
1027	13			
1028	14			
1029	15			
1030	16			
1031	17			
1032	18			
1033	19			
1034	20			
1035	21			
1036	22			
1037	23			
1038	24			
1039	25			
1040	26			
1041	27			
1042	28			
1043	29			
1044	30			

Line No		Drg/Part	Description	Qty
1045	31			
1046	32			
1047	33			
1048	34			
1049	35			
1050	36			
1051	37			
1052	38			
1053	39			
1054	40			
1055	41			
1056	42			
1057	43			
1058	44			
1059	45			
1060	46			
1061	47			
1062	48			
1063	49			
1064	50			
1065	51			
1066	52			
1067	53			
1068				
1069				
1070				
1071		**1217083**	**Control Handle Electrical Assembly**	
1072				
1073	1			
1074	2		Handle Machining / Fettling	1
1075	3	1217114	Top Plate Machining/engraving	1
1076	4	2217115	Pushbuttons (Burgess K3T)	6
1077	5	2217116	Red Buttons -T1R	2
1078	6	2217117	Blue Buttons -T1BU	2
1079	7	2217118	Yellow Buttons - T1Y	2
1080	8	2217119	Microswitch -RS 337-857	1
1081	9	2217120	Microswitch -RS 331-405	1
1082	10	2410024	M3 Pan Hd. Screw x 12	2
1083	11	2410023	M2.5 Pan Hd. Screw x 12	2
1084	12	1217121	Trigger	1
1085	13	1217122	Pivot Shaft 3mm Dia	1
1086	14	2217123	Bezels For Pushbuttons TB1S	6
1087	15	1217124	Wiring Harness (Modified 12x7/0.2 cable)	1
1088	16	2217125	Plug 12 Way RS 474 - 883	1
1089	17	2217126	Sleeved Grommet	1
1090	18	2410025	M4 Pan Hd. Screw x 30	2
1091	19	2217127	Crimps RS 466 - 977	12
1092		2410026	M2.5 Pan Hd. Screw x 6	4
1093				
1094				
1095	ITEM			
1096			Conduit Assembly (Control Arm)	

Line No		Drg/Part	Description	Qty
1097			1217088 (cont. handle, pot, DMH)	
1098	1			
1099	2	2217128	Extra Flex. Conduit x 1400 RS 544-308	1
1100	3	2217129	Adaptor RS 622 - 818	2
1101	4	1217130	Proxi Cable (RS 351-409)	1
1102	5	2217131	12 Way Socket RS 474 - 502	1
1103	6	2217132	Socket Crimps RS466 - 983	12
1104	7	1217124	Wiring Harness (Modified 12x 7/0.2 cable)	1
1105	8	2217133	2 x Twisted Pair Cable RS 362 -140	1
1106	9	2217134	Din Connector- Farnell 422968R	1
1107			Prox Detect OBT 200 18GM70 - E5 -V1	1
1108				
1109				
1110				
1111				
1112				
1113	ITEM			
1114			Conduit Assembly - Control Arm	
1115			1217078 (Vert. Motor and Pot)	
1116	1			
1117	2	2217135	4 Way Plug (For Motor) RS 467 - 223	2
1118	3	2217136	4 Way Socket RS 467 - 188	2
1119	4	2217137	Plastic Enclosure RS 507- 955	2
1120	5	2217128	Extra Flex. Conduit 1400lg RS 622- 789	2
1121	6	2217129	Adaptor RS 622 - 795	4
1122	7	2217138	Male Crimps Size 16 RS 468 - 541	8
1123	8	2217139	Female Crimps Size 16 RS 468 -557	8
1124	9	2217134	Din Connector- Farnell 422968R	4
1125	10	2217133	2 x Twisted Pair Cable RS 362 -140 - 3m	2
1126	11	2217140	twisted pair wire + earth (23/0.2)-3Metres	2
1127		2217141	Sleeved Grommet RS 543 - 282	4
1128				
1129				
1130			1217078 (Horz. Motor and Pot)	
1131	1			
1132	2	2217135	4 Way Plug (For Motor) RS 467 - 223	2
1133	3	2217136	4 Way Socket RS 467 - 188	2
1134	4	2217137	Plastic Enclosure RS 507- 955	2
1135	5	2217128	Extra Flex. Conduit 1400lg RS 622- 789	2
1136	6	2217129	Adaptor RS 622 - 795	4
1137	7	2217138	Male Crimps Size 16 RS 468 - 541	8
1138	8	2217139	Female Crimps Size 16 RS 468 -557	8
1139	9	2217134	Din Connector- Farnell 422968R	4
1140	10	2217133	2 x Twisted Pair Cable RS 362 -140 - 3m	2
1141	11	2217140	twisted pair wire + earth (23/0.2)-3Metres	2
1142		2217141	Sleeved Grommet RS 543 - 282	4
1143				
1144				
1145				
1146			Superstructure Junction Box Assembly	
1147			1217077 (Includes Cabling in Cond.3, 8)	
1148	1			

Line No		Drg/Part	Description	Qty
1149		2217142	Junction Box 250 x 250 Sarel 04426	1
1150			Plate for Sarel J/Box 24226	1
1151				
1152			CONDUIT 3 (to elect. panel behind operator)	
1153	2			
1154	3	2217144	Power Cable 3ph (included below, conduit 8)	2
1155	5	2217145	18 core cable (included below,cond 8)	1
1156	6	2217147	Kopex 25mm EPG05 (2.30m)	1
1157		2217148	Kopex Str.Adaptors, 25mm YMP0506	2
1158				
1159				
1160			CONDUIT 8	
1161	7			
1162	9	2217149	Kopex 40mm x 10.4 Metres EPG07	10
1163	10	2217151	Kopex Str. Adaptor, 40mm YMP0708	4
1164	11	Ref.Only	Hose For Drain 12.5m (See item 93)	14
1165	13			
1166	14	2217154	4 Core, 1.5mm Power Cable RS 380 019	28
1167		2217155	12 Core SigCable (For Cust.Cont If Req.)	16
1168	15		Ref RS 363 - 070	
1169		2217156	18 Core Signal Cable (For Pump S/S)	14
1170			Ref RS 363 - 086	
1171				
1172				
1173				
1174			Boom Junction Box Assembly	
1175			1217090 (Includes Cabling in Conduit 5)	
1176	1			
1177		2217143	Junction Box 200 x 200 Sarel 04420	1
1178				
1179			CONDUIT 5	
1180	2			
1181	3	2217147	Kopex 25mm (L = 9M) EPG05	9
1182	4	2217148	Kopex Str.Adaptors, 25mm YMP0506	2
1183		2217157	Wire Harness 33 lengths of Raychem wire	33
1184			L = 14m, Farnell 033683A (11 cores) orange	
1185			L = 14m, Farnell 033679D (11 cores) black	
1186			L = 14m, Farnell 412661B(11 cores) G/Yel	
1187				
1188	5			
1189	6	2217158	Kopex 16mm (Boom sol., L = 0.7M) EPG03	8
1190	8	2217159	Kopex 16mm (Press. Red, L = 2M) EPG03	1
1191	9	2217161	Kopex 16mm Str. Adaptor PG11 YMP0303	11
1192	10	2217162	Kopex 16mm 90 Adaptor PG11 YLP0303	11
1193		2217134	Din Connector- Farnell 422968R	11
1194				
1195				
1196	ITEM			
1197			Operators Panel Assembly 1217086	
1198				
1199	1		(Includes Cabling in Conduit 9)	
1200	2	2217165	Telemecanique Box XAP - M54 H29	1

Line No		Drg/Part	Description	Qty
1201	3	2217166	Engraved label	1
1202	4	2217167	Pushbuttons (For Cust.) Burgess V3T	6
1203	5	2217167	Pushbuttons Burgess (stp/start etc) V3T	4
1204	6	2217168	Indicator Lights RS 339-437	3
1205		2217169	Bulbs RS 564-497	3
1206			Lenses, Red, RS 339-392	1
1207	7		Lenses, Grn, RS 339-370	2
1208	8	2217170	Series Resistor for 110V, RS 159-590	3
1209	9	2217171	LED's (Red) RS 577-140	4
1210	10	2217172	LED's (Green) RS 577-156	1
1211	11	2217173	Emerg. Stop Pushbutton RS 318-979	1
1212	12	2217174	Pot. 1K (For Grip Force) RS 173-209	1
1213	13	2217175	Knob RS 581-896	1
1214	14	2217176	Dial Set RS 581-953	1
1215	15	2217177	Bezels (Customer Func.If Req.) TB3S	6
1216	16	2217178	Button (Customer Func.If Req.) Red T3R	3
1217	17	2217179	Button (Customer Func.If Req.) Grn T3G	3
1218	18	2217177	Bezels TB3S	4
1219	19	2217178	Button Red T3R	1
1220	20	2217179	Button Green T3G	1
1221	21	2217180	Button Yellow T3Y	1
1222		2217181	Button Blue T3BU	1
1223				
1224			CONDUIT 9	
1225	22			
1226	23	2217147	Kopex 25mm L = 4M EPG05	1
1227	24	2217148	Kopex Str.Adaptors For 25mm YMP0506	2
1228	25	2217155	12 Core Cabl 16 / 0.2 RS 363 -070 5.5M	1
1229		2217146	10 Wire Harness 16 / 0.2 (Conduit 3)5.5M	1
1230				
1231				
1232				
1233	ITEM			
1234			L.H. Controller Assembly 1217085	
1235			(Includes Cabling in Conduit 7)	
1236	1			
1237	2	2217182	Plastic Box RS 223 - 174	1
1238	4	2217183	Joystick RS 139 - 114	1
1239	5	2217160	Kopex 16mm x 1.4 Metres	1
1240	6	2217161	Kopex 16mm Str. Adaptor PG11 YMP0303	1
1241	7	2217162	Kopex 16mm 90 Adaptor PG11 YLP0303	1
1242	8	2217185	5 Wire Harness 16/0.2 Black	1
1243	9		Breaker pushbutton	
1244			Hammer pushbutton	
1245	ITEM			
1246				
1247			Manifold Junction Box Assembly	
1248			1217082 (Includes Slew Limit Box)	
1249				
1250			MANIFOLD BOX	
1251	1			
1252	2	2217160	Kopex 16mm (for 3xBVs.) EPG03	4

Line No		Drg/Part	Description	Qty
1253	3	2217161	Kopex 16mm Str. Adaptor PG11 YMP0303	6
1254	4	2217162	Kopex 16mm 90 Adaptor PG11 YLP0303	7
1255	5	2217186	Kopex for S Valves 12mm L=1.5M EPG02	3
1256	6	2217187	Kopex adaptors 12mm straight YMP0202	3
1257	7	2217188	Adapaflex adaptors CSO 954	3
1258	8	2217160	Kopex 16mm (To pots 2,4) L = 1M EPG03	2
1259		2217143	Junction Box 200 x 200 Sarel 04420	1
1260				
1261				
1262				
1263			CONDUIT 4	
1264	9			
1265	10	2217148	Kopex Str.Adaptors For 25mm YMP0506	2
1266	11	2217189	18 Core Cable (Manifold) L = 4.5M	1
1267	12	2217190	12 Core Cable (Slew Detectors)	1
1268	13	2217191	Two twisted pair cables (pots)RS 362140	2
1269		2217147	Kopex 25mm L = 3.5M EPG05	1
1270				
1271				
1272			SLEW LIMIT BOX	
1273	14			
1274	15	2217161	Kopex 16mm Str. Adaptor PG11 YMP0303	2
1275	16	2217192	Prox Detect OBT20018GM70-E5-V1	4
1276	17	2217193	Proxi. Detectors Cables RS 351 - 409	4
1277	18	2217160	Kopex 16mm (To slew junction box) EPG03	1
1278		2217142	Junction Box 160 x 160 Sarel 01475	1
1279				
1280				
1281				
1282			Miscellaneous Electrical Parts	
1283	1			
1284	2	1217051	Main PCB 1217051V3	1
1285	3		Screws	
1286	4		Spring washer	
1287	5	1217054	Main PCB Heatsink	1
1288	6	1217053	Amplifier Assembly PCB 1217053V2	1
1289	7		Screws	
1290	8		Spring washer	
1291	9	1217055	Linear amplifier heatsink	1
1292			Main power Supply MP6-3R-IN-IN 00/330	1
1293	10		(MML600 / 24GY5 / 246Y5, 15 / 15E)	
1294	11		Screws	
1295	12		Spring washers	
1296			Cable assembly to cab light	1
1297			Includes box 502-348	1
1298	14		and T/Switch 316-771	1
1299	15		Hex bolts	4
1300	16		Spring washers	4
1301	17		Trunking	1
1302			Isolator for Control System	1
1303			includes box (502-348)	1
1304	19		and switch (316-771)	1

Line No		Drg/Part	Description	Qty
1305	20		General consumables (terms/dinrail etc)	1
1306		1114040	Plate for power supply	1
1307				
1308				
1309				
1310				
1311				
1312				
1313				
1314				
1315				
1316				
1317		**0102055**	**Assembly of Slew Switches**	
1318	ITEM		(INTERLOCK SLEW TO LONG TRAVEL)	
1319	1			
1320	2	1102126	Support for proxy cover	1
1321	3	1102127	Proxy Cover	1
1322	4			
1323	5			
1324	6			
1325	7			
1326	8			
1327	9			
1328	10			
1329	11	1102085	Plate for Switches	1
1330	12			
1331	13	1102145	Support Bracket	1
1332	14			
1333	15			