DATE D/M/Y	DES'D	APP'D	DESCRIPTION	NO.	REV.
25.04.00	KARASPE		ADDED CSI SENSORS	1	A

VARIANT DESCRIPTION	MATERIAL	NET WGT. KG	VAR.
MODUScreen FT1		1100.0	K1

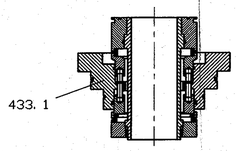

Akselitiiviste
Shaft seal
1: 2,5

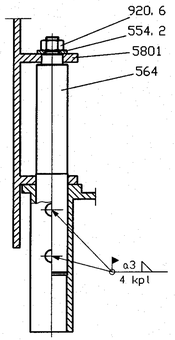

A–A
1: 2.5

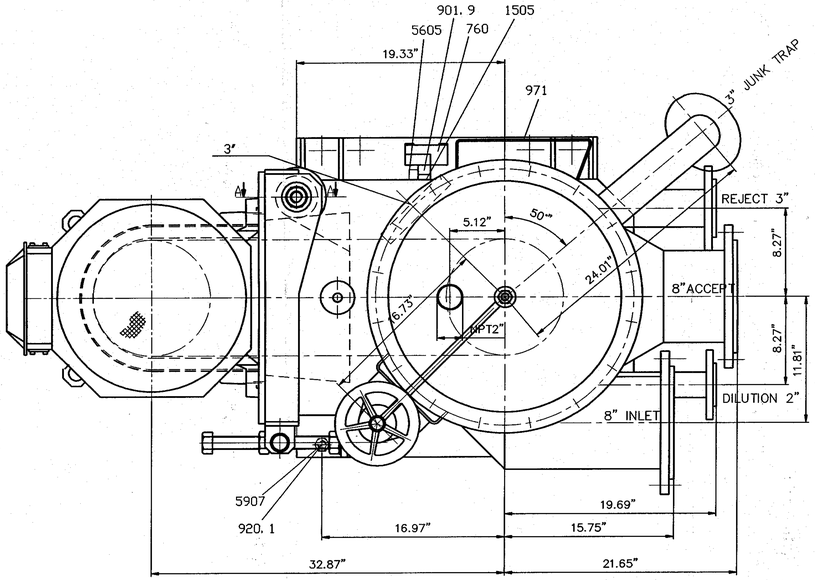

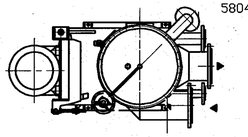

Sovitusasento
Position of assembly E

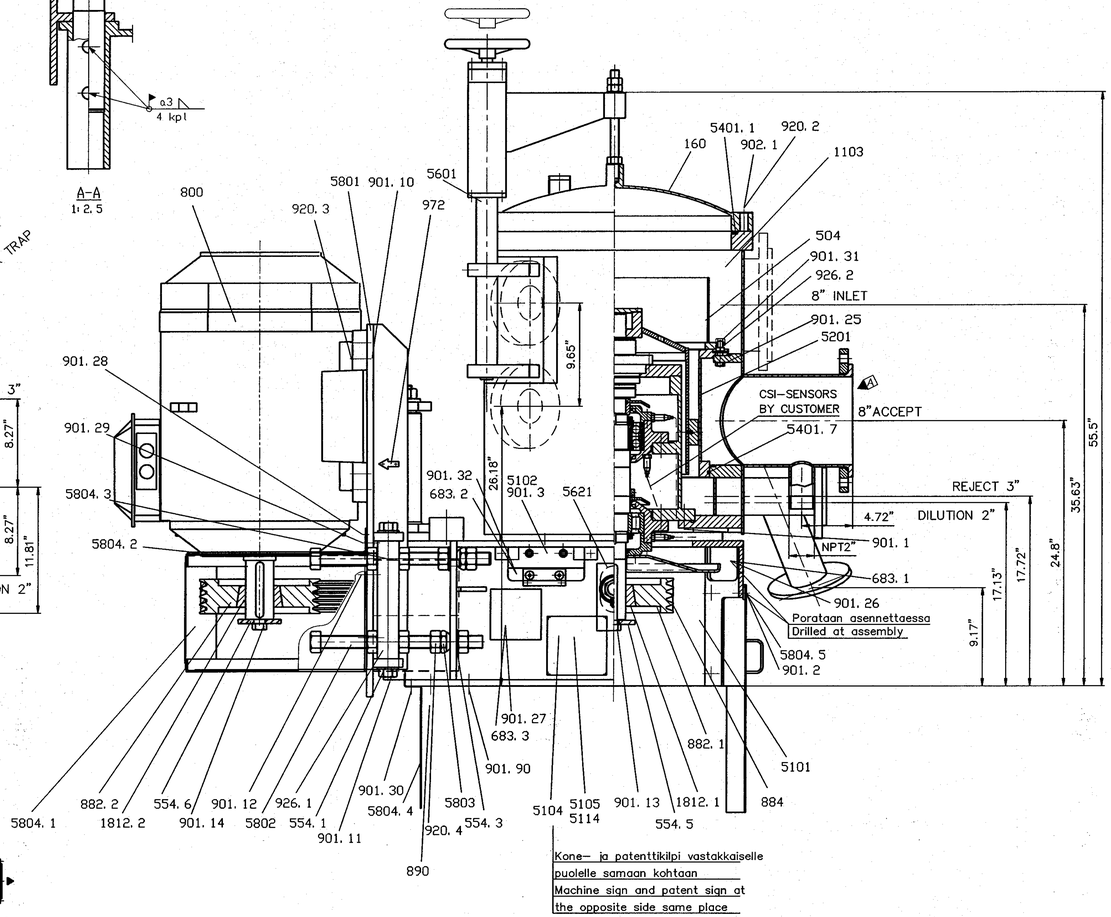

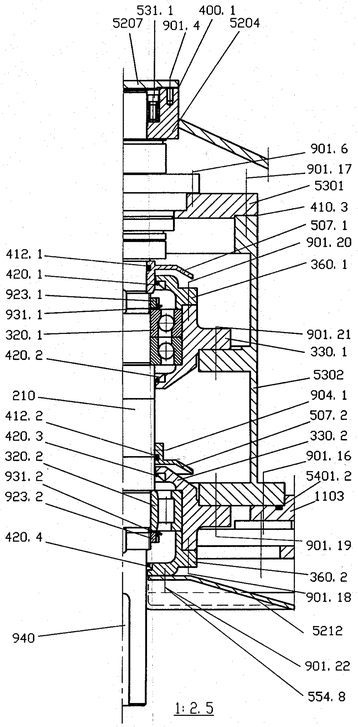

1: 2. 5

GENERAL TOLERANCES		Nominal measure	>0-3 ≤3	>3-6 ≤6	>6-30 ≤30	>30-120 ≤120	>120-400 ≤400	>400-1000 ≤1000	>1000-2000 ≤2000	>2000-4000 ≤4000	>4000-8000 ≤8000	>8000-12000 ≤12000	>12000-16000 ≤16000	>16000-20000 ≤20000
Welded constr.	Linear dim. ISO 3302-1	Precision Class	S	±1	±1	±2	±2	±3	±4	±6	±8	±10	±12	±14	±16
Machining	Linear dim. ISO 2768-mK	Tolerance class	m	±0.1	±0.2	±0.3	±0.5	±0.8	±1.2	±2	±3	±4	±5	±6	–

Surface roughness	ISO 1302–Ra	– Machining	ISO 2768–mK (Greater non-vert tolerances only for dia < 500 mm)
Welding symbols	ISO 2553	– Welded constr.	EN 13920–B2 – Castings, machined/cast	ISO 8062 CT10
Tolerancing	ISO 8015	– Flame cutting	SFS 4572–B – Castings, hondmoulded	ISO 8062 CT12
Geom. tolerances	ISO 1101		DIN 2310–B – Forgings	SFS 3507, DIN 7527

THIS DOCUMENT AND ANY INFORMATION CONTAINED THEREIN ARE THE PROPERTY OF AHLSTROM MACHINERY CORPORATION. THE UNAUTHORIZED COPYING OF THIS DOCUMENT OR ANY PART THEREOF, OR THE DISCLOSURE OF ITS CONTENTS OR ANY INFORMATION CONTAINED THEREIN, IS PROHIBITED. THE USE OF THIS DOCUMENT OR ANY INFORMATION CONTAINED THEREIN IS LIMITED TO WHAT HAS BEEN EXPRESSLY AUTHORIZED BY AHLSTROM MACHINERY CORPORATION. THE DISCLOSURE OF THIS DOCUMENT OR ANY PART THEREOF, OR ANY INFORMATION CONTAINED THEREIN, TO ANY THIRD PARTY WITHOUT THE PRIOR WRITTEN CONSENT OF AHLSTROM MACHINERY CORPORATION IS PROHIBITED. THE RECEIPT OF THIS DOCUMENT OR ANY INFORMATION CONTAINED THEREIN, OR ANY PART THEREOF, IMPLIES THAT THE RECIPIENT HAS ACCEPTED THE RESTRICTIONS SET FORTH ABOVE.

AHLSTROM
AHLSTROM MACHINERY
Fiber Equipment
Karhula Finland

SAPPI FINE PAPER
ASSEMBLY DRAWING

MODUScreen FT1

DESIGNED	DATE D/M/Y	MAIN REF. DWG.	TYPE
KARASPE	20.03.2000		
CHECKED			
APPROVED			

SCALE	PROJECT NO	PRODUCT CODE	DOWT
1:5			

DRAWING NO. FE900290 REV. A