M30
(Gas/LPG)

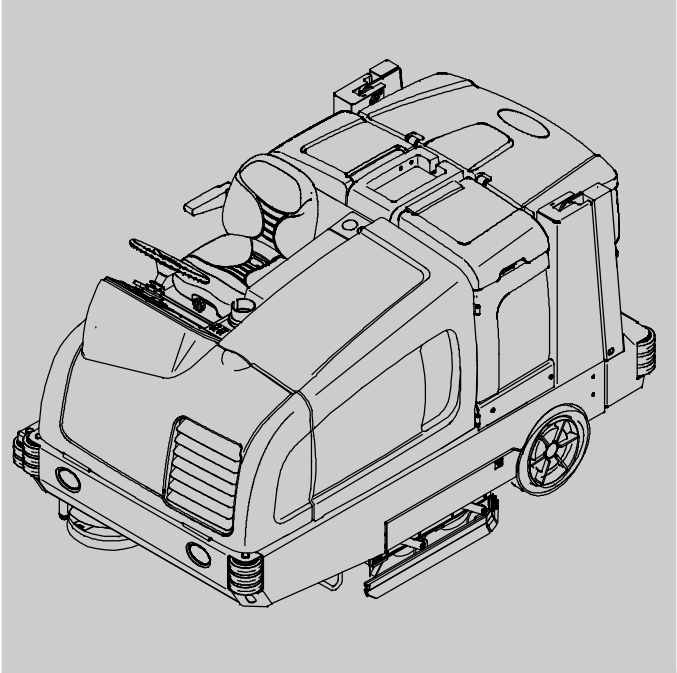

Scrubber- Sweeper Parts Manual

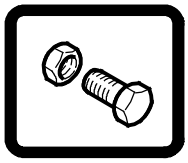

FaST® Foam Scrubbing Technology

ecH2O® An ORBIO™ Technology

The Safe Scrubbing Alternative®
ES® Extended Scrub System
Tennant*True®* *Parts*
Hygenic® Fully Cleanable Tanks
FloorSmart® Integrated Cleaning System
IRIS® a Tennant Technology

CE

Global

For the latest Parts manuals and other language Operator manuals, visit:

www.tennantco.com/manuals

9003946
Rev. 16 (5-2016)

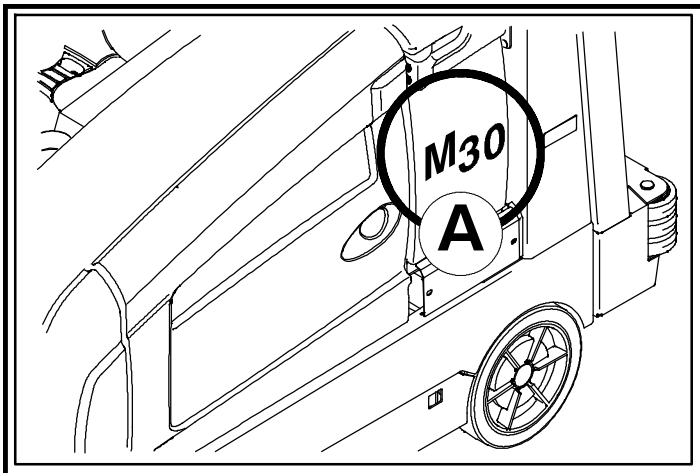

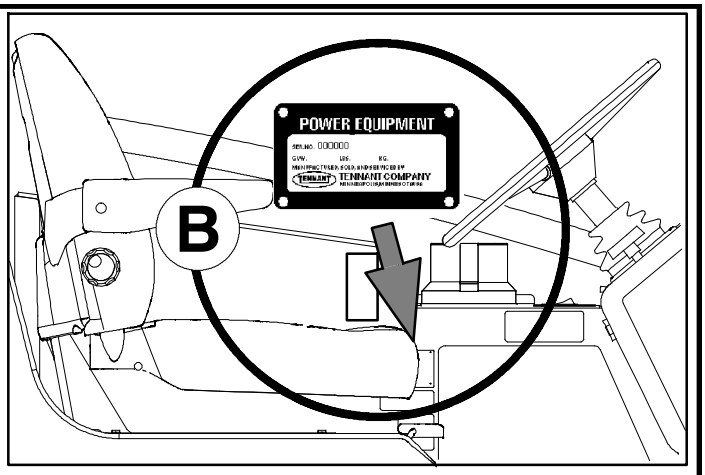

Ref	Part No.	Serial Number	Description	Qty.
1	82681	(000000-)	Bracket Wldt, Lpg Mount	1
▽ 2	63810	(000000-)	Latch Assy, Lpg Tank Mtg, W/Nut	4
▲ 3	51839	(000000)	Nut Adjustable, Lpg Tank Mtg	2
4	49263	(000000-)	Tie, Cable	3
5	82556	(000000- 001039)	Bracket, Vaporizer	1
6	54930	(000000)	Vaporizer, LPG	1

D

C

EN

HOW TO ORDER PARTS - See diagram above

Only use TENNANT Company supplied or equivalent parts. Parts and supplies may be ordered online, by phone, by fax or by mail.

Follow the steps below to ensure prompt delivery.

1. **(A)** Identify the machine model.
2. **(B)** Identify the machine serial number from the data plate.
3. **(C)** Ensure the proper serial number is used from the parts list.
4. Identify the part number and quantity. Do not order by page or reference numbers.
5. Provide your name, company name, customer ID number, billing and shipping address, phone number and purchase order number.
6. Provide detail shipping instructions.

(D) ▽ - Identifies an assembly
▲ - Identifies parts included in assembly

Please fill out at time of installation for future reference.

Model No. - _____

Serial No. - _____

Machine Options - _____

Sales Rep. - _____

Sales Rep. phone no. - _____

Customer ID Number - _____

Installation Date - _____

Tennant Company
PO Box 1452
Minneapolis, MN 55440
Phone: (800) 553-8033 or
(763) 513-2850
www.tennantco.com

Tennant N.V.
Industrielaan 6 5405 AB
P.O. Box 6 5400 AA Uden -
The Netherlands
europe@tennantco.com
www.tennantco.com

テナントカンパニー日本支店
〒210–0916神奈川県川崎市幸区南幸町2–9サンカビル5F
TEL:044–556–1201 FAX:044–556–1202
www.tennant.co.jp

Thermo-Sentry, Touch-N-Go, 1-STEP, Clean-Wedge, Variable Drain Valve, EasyOpen, Grip-N-Go, MaxPro2, Dura-Track, SmartRelease, InstantAccess, Duramer, FaST-PAK, ES, FloorSmart and ErgoSpace are trademarks of Tennant Company.

Specifications and parts are subject to change without notice.

Copyright © 2008 - 2016 TENNANT Company, Printed in U.S.A.

BG

КАК ДА ПОРЪЧВАМЕ ЧАСТИ - Вижте схемата по-горе

Използвайте само части, доставени от TENNANT или техни еквиваленти. Частите и доставките могат да се поръчат онлайн, по телефон, факс или по пощата.

Следвайте долупосочените стъпки, за да си осигурите бърза и точна доставка.

1. **(A)** Посочете модела на машината.
2. **(B)** Посочете серийния номер на машината от табелката с техническите данни.
3. **(C)** Уверете се, че сте използвали точния сериен номер от списъка с части.
4. Посочва номера на частта и количеството. Не поръчвайте части според страницата или референтните номера.
5. Посочете своето име, наименованието на фирмата, клиентския номер, адреса за получаване на сметката и доставката, тел.номер и номера на поръчката.
6. Посочете подробни инструкции за доставката.

(D) ▽ - посочва начин на монтаж
▲ - посочва частите, включени в монтажа

Моля, попълнете по време на монтажа за бъдеща справка.

Модел Э - _____
Сериен Э - _____
Опции на машината - _____
Търговски представител - _____
Тел. Э на търг. представител - _____
Клиентски Э - _____
Дата на монтаж - _____

CN

如何订购部件 – 参见下表

仅使用 TENNANT 公司提供的或同等部件。部件和供应可以在线订购，通过电话、传真或邮件订购。
请遵循下面的步骤确保及时交付。

1. (A) 确定机器型号。
2. (B) 从数据标签确定机器序列号。
3. (C) 确保使用部件列表中的正确序列号。
4. 确定部件号和数量。
   不要按页面或参考编号订购。
5. 提供您的姓名、公司名称、客户 ID 号、付帐和送货地址、电话号码和采购单编号。
6. 提供详细的送货说明。

(D) ▽ – 确定组件
▲ – 确定组件中包含的组件

请在安装时填写供未来参考。

型号 – _____
序列号 – _____
机器选项 – _____
销售代表– _____
销售代表电话号码 – _____
客户 ID 编号 – _____
安装日期 – _____

CZ

OBJEDNÁVÁNÍ DÍLŮ - Viz schéma výše.

Pou ívejte pouze díly dodané společností TENNANT Company nebo jim odpovídající. Díly a materiál lze objednat online, telefonem, faxem nebo poštou.

Aby bylo zajištěno rychlé dodání, postupujte podle kroků uvedených ní e.

1. **(A)** Zjistěte model stroje.
2. **(B)** Zjistěte sériové číslo stroje z výrobního štítku.
3. **(C)** Pou ijte správné sériové číslo ze seznamu dílů.
4. Určete číslo a mno ství dílů.
   Neobjednávejte podle stran nebo referenčních čísel.
5. Uveďte jméno, název společnosti, číslo ID zákazníka, fakturační a dodací adresu, telefonní číslo a číslo objednávky.
6. Uveďte podrobné pokyny pro dodání.

(D) ▽ - označuje sestavu
▲ - označuje díly v sestavě

Vyplňte během sestavování pro budoucí potřebu.

Číslo modelu - _____
Sériové číslo - _____
Doplňky zařízení - _____
Obchodní zástupce - _____
Tel. č. obchodního zástupce - _____
Číslo ID zákazníka - _____
Datum instalace - _____

DE

BESTELLEN VON ERSATZTEILEN - Siehe oben stehendes Diagramm.

Verwenden Sie nur von TENNANT gelieferte oder gleichwertige Ersatzteile. Ersatz- und Verschleißteile können online, telefonisch, per Fax oder per E-Mail bestellt werden.

Befolgen Sie für eine umgehende Lieferung die folgenden Schritte.

1. **(A)** Geben Sie das Modell der Maschine an.
2. **(B)** Geben Sie die Seriennummer der Maschine an (auf dem Datenaufkleber).
3. **(C)** Achten Sie darauf, dass die richtigen Seriennummer aus der Ersatzteilliste verwendet wird.
4. Geben Sie die Ersatzteilnummer und die Menge an.
   Bestellen Sie nicht nach Seitenzahl oder Referenznummern.
5. Geben Sie Ihren Namen, den Firmennamen, die Kundennummer, die Rechnungs- und Lieferadresse, die Telefonnummer und die Einkaufsauftragsnummer an.
6. Erteilen Sie genaue Versandanweisungen.

(D) ▽ - steht für eine Einheit
▲ - steht für Einzelteile einer Einheit

Bitte bei der Inbetriebnahme als Referenzangabe ausfüllen.

Modellnr. - _____
Seriennr. - _____
Maschinenoptionen - _____
Verkäufer - _____
Telefonnummer des Verkäufers - _____
Kundennummer - _____
Installationsdatum - _____

DK

BESTILLING AF RESERVEDELE - Se ovenstående tabel.

Brug kun reservedele, der er fremstillet af TENNANT, eller dele af tilsvarende kvalitet. Reservedele og tilbehør kan bestilles online, pr. telefon, pr. fax eller pr. brev.

Følg nedenstående trin for at sikre hurtig levering.

1. **(A)** Identificér maskinmodellen.
2. **(B)** Identificér maskinens serienummer på datamærkaten.
3. **(C)** Kontrollér, at det rigtige serienummer bruges i reservedelslisten.
4. Identificér reservedelsnummeret og antallet. Bestil ikke efter side- eller referencenumre.
5. Angiv dit navn, firmanavn, kunde- id- nummer, faktureringsadresse og leveringsadresse, telefonnummer og indkøbsordrenummer.
6. Angiv detaljerede instruktioner til forsendelse.

(D) ▽ - identificerer en enhed
▲ - identificerer reservedele i en enhed

Udfyld venligst på installationstidspunktet til fremtidig brug.

Modelnr. - _____
Serienr. - _____
Maskinekstraudstyr - _____
Salgskonsulent. - _____
Salgskonsulentens tlf. - _____
Kunde- id- nr. - _____
Installationsdato - _____

EE

KUIDAS VARUOSI TELLIDA – vaadake alltoodud joonist

Kasutage ainult TENNANT Company poolt tarnitud või samaväärseid varuosi. Varuosi ja tarvikuid saab tellida Interneti, telefoni, faksi või posti teel.

Kiire kohaletoimetamise tagamiseks järgige alltoodud juhiseid.

1. **(A)** Märkige masina mudel.
2. **(B)** Märkige andmesildil olev masina seerianumber.
3. **(C)** Veenduge, et olete valinud varuosade loendist õige seerianumbri.
4. Märkige varuosa number ja kogus. Ärge tellige lehekülje- või viitenumbri alusel.
5. Märkige oma nimi, ettevõtte nimi, kliendinumber, arveldus- ja saatmisaadress, telefoninumber ja ostutellimuse number.
6. Lisage täpsed saatmisjuhised.

(D) ▽ - tähistab komplekti
▲ - tähistab komplektis olevaid osii

Palun täitke paigaldamise ajal edaspidiseks viitamiseks.

Mudeli number - _____
Seerianumber - _____
Masina lisavarustus - _____
Müügiesindus - _____
Müügiesinduse telefoninumber - _____
Kliendinumber - _____
Paigaldamise kuupäev - _____

ES

CÓMO SOLICITAR PIEZAS - Consulte el diagrama anterior.

Utilice sólo las piezas suministradas por TENNANT Company o piezas equivalentes. Puede solicitar las piezas a través de internet, por teléfono, por fax o por correo.

Siga los siguientes pasos para que la entrega sea rápida.

1. **(A)** Indique el modelo de máquina.
2. **(B)** Indique el número de serie de la etiqueta de datos.
3. **(C)** Asegúrese de que indica el número de serie correcto de la lista de piezas.
4. Indique la cantidad y el número de la pieza. No realice el pedidoindicando el número de página o el de referencia.
5. Incluya su nombre, el nombre de la empresa, el ID de cliente, las direcciones de envío y facturación, el número de teléfono y el número del pedido de compra.
6. Facilite instrucciones de envío.

(D) ▽ - identifica un conjunto
▲ - identifica piezas de un conjunto

Rellene estos datos cuando realice la instalación para utilizarlos como referencia en el futuro.

Nº modelo - _____
Nº serie - _____
Opciones de la máquina - _____
Vendedor - _____
Nº teléfono vendedor - _____
Nº cliente - _____
Fecha de instalación - _____

FI

KUINKA VARAOSIA TILATAAN - katso kuvaa yllä.

Käytä ainoastaan TENNANTIN toimittamia tai niitä vastaavia varaosia. Voit tilata varaosia ja tarvikkeita internetistä, puhelimitse, faksilla tai sähköpostilla.

Noudata seuraavia ohjeita täsmällisen toimituksen varmistamiseksi.

1. **(A)** Katso koneen malli.
2. **(B)** IKatso koneen sarjanumero sen tunnustarrasta.
3. **(C)** Varmista, että osaluettelosta, että käytät oikeaa sarjanumeroa.
4. Katso osanumero ja kappalemäärä. Älä tilaa ilmoittamalla sivu- tai viitenumeroita.
5. Ilmoita nimesi, yrityksesi nimi, asiakasnumero, laskutus- ja toimitusosoite, puhelinnumero ja ostotilauksen numero.
6. Ilmoita yksityiskohtaiset toimitusosoitteet.

(D) ▽ - tarkoittaa kokoonpanoa
▲ - tarkoittaa kokoonpanoon sisältyviä osia

Ole hyvä ja täytä ottaessasi koneen käyttöön myöhempiä tarpeita varten.

Mallinumero - _____
Sarjanumero - _____
Koneen lisävarusteet - _____
Myyntiedustaja - _____
Myyntiedustajan puhelinnumero - _____
Asiakasnumero - _____
Asennuspäivä - _____

FR

COMMENT COMMANDER DES PIÈCES DÉTACHÉES - Voir le schéma ci- dessus.

Utilisez uniquement des pièces fournies par la société TENNANT ou équivalentes. Les pièces et fournitures peuvent être commandées en ligne, par téléphone, fax, ou par courrier.

Suivez les étapes ci- dessous pour assurer une livraison rapide.

1. **(A)** Identifiez le modèle de la machine.
2. **(B)** Identifiez le numéro de série de la machine, à partir de l'étiquette signalétique.
3. **(C)** Assurez- vous que le numéro de série correct est utilisé à partir de la liste de pièces détachées.
4. Identifiez le numéro de pièce et la quantité. Ne commandez pas par page ou numéros de référence.
5. Fournissez votre nom, le nom de votre société, votre numéro d'identification de client, l'adresse de facturation et d'expédition, le numéro de téléphone et le numéro du bon de commande.
6. Fournissez des instructions d'expédition détaillées.

(D) ▽ - identifie un assemblage
▲ - identifie les pièces composant l'assemblage

A remplir au moment de l'installation à titre de référence.

Nº du modèle - _____
Nº de série - _____
Options de la machine - _____
Agent commercial - _____
Nº tél. de l'agent commercial - _____
Numéro d'identification client - _____
Date d'installation - _____

GR

ΤΡΟΠΟΣ ΠΑΡΑΓΓΕΛΙΑΣ ΑΝΤΑΛΛΑΚΤΙΚΩΝ - Βλ. παραπάνω διάγραμμα.

Χρησιμοποιήστε μόνο ανταλλακτικά παρεχόμενα από την TENNANT Company ή ισοδύναμα. Τα ανταλλακτικά και αναλώσιμα μπορούν να παραγγελθούν online, τηλεφωνικά, με φαξ ή ταχυδρομικά.

Ακολουθήστε τα παρακάτω βήματα για να εξασφαλίσετε την έγκαιρη αποστολή τους.

1. **(A)** Βρείτε το μοντέλο μηχανήματος.
2. **(B)** Βρείτε τον αριθμό σειράς του μηχανήματος από την ετικέτα στοιχείων.
3. **(C)** Βεβαιωθείτε ότι χρησιμοποιείται ο σωστός αριθμός σειράς από τον κατάλογο ανταλλακτικών.
4. Βρείτε κωδικό ανταλλακτικού και ποσότητα. Μην παραγγέλνετε βάσει σελίδας ή αριθμών αναφοράς.
5. Δώστε το όνομα σας, όνομα εταιρείας, ID (κωδικό) πελάτη, διεύθυνση τιμολόγησης και αποστολής, αριθμό τηλεφώνου και αριθμό εντολής προμήθειας.
6. Δώστε λεπτομερείς πληροφορίες αποστολής.

(D) ▽ - υποδηλώνει υποσύστημα
▲ - υποδηλώνει τα μέρη που περιλαμβάνονται στο υποσύστημα

Παρακαλούμε συμπληρώστε κατά την ώρα της εγκατάστασης για μελλοντική αναφορά.

Αρ. Μοντέλου - _____
Αρ. σειράς - _____
Επιλογές Μηχανήματος - _____
Εκπ. πωλήσεων - _____
Τηλ. εκπροσώπου πωλήσεων - _____
Αριθμός πελάτη - _____
Ημερομηνία εγκατάστασης - _____

HU

HOGYAN RENDELJÜNK ALKATRÉSZEKET - Lásd: fenti diagramm.

Kizárólag TENNANT vagy azzal egyenértékű cserealkatrészeket használjon. Az alkatrészeket és anyagokat meg lehet rendelni az Interneten keresztül, vagy telefonon, faxon és e-mailben.

A pontos szállítás érdekében kövesse az alábbi lépéseket.

1. **(A)** Adja meg a gép típusát.
2. **(B)** Az adatcímke alapján adja meg a gép gyártási számát.
3. **(C)** Ügyeljen arra, hogy a megfelelő gyártási számot válassza ki az alkatrészlistáról.
4. Adja meg a rendelési számot és a mennyiséget. A rendeléshez ne az oldalszámot vagy a hivatkozási számot használja.
5. Adja meg a nevét, a cége nevét, az ügyfélazonosító számát, a számlázási és szállítási címét, a telefonszámát és a rendelési számot.
6. Adjon részletes szállítási utasításokat.

(D) ▽ - a jel csomagra utal
▲ - a jel a csomagban található alkatrészekre utal

A későbbi visszakeresések érdekében kérjük, hogy a rovatokat az első üzembehelyezéskor töltse ki.

Típusszám - _____
Gyártási szám. - _____
A gép felszereltsége - _____
Kereskedelmi képviselő - _____
Kereskedelmi képviselő telefonszáma - _____
Ügyfél azonosító száma - _____
Üzembehelyezés dátuma - _____

IT

COME ORDINARE LE PARTI - Vedere schema precedente.

Utilizzare solo ricambi forniti da TENNANT o equivalenti. Ricambi e forniture possono essere ordinati online, per telefono, via fax o per posta elettronica.

Per ottenere una consegna rapida, seguire i passaggi indicati di seguito.

1. **(A)** Identificare il modello della macchina.
2. **(B)** Identificare il numero di serie della macchina dall'etichetta dei dati.
3. **(C)** Utilizzare il numero di serie corretto presente nell'elenco delle parti di ricambio.
4. Identificare numero di parte e quantità. Non ordinare per numero di pagina o di riferimento.
5. Fornire nome del contatto, nome della società, numero di ID cliente, indirizzo di fatturazione e di spedizione, numero di telefono e numero di ordine di acquisto.
6. Fornire istruzioni dettagliate per la spedizione.

(D) ▽ - identifica un gruppo
▲ - identifica parti comprese in un gruppo

Compilare il modulo al momento dell'installazione per poterlo consultare in futuro in caso di necessità.

N. Modello - _____
N. Serie - _____
Opzioni della macchina - _____
Venditore - _____
Tel. venditore - _____
Numero ID cliente - _____
Data di installazione - _____

JP

パーツの発注方法 ?上記の図を参照してください

TENNANT社製のパーツまたは同等品のみをお使いください。
パーツやサプライ品のご注文は、オンライン、電話、FAX、または手紙でお願いいたします。
確実にお届けできるように、以下の情報お知らせください。

1. **(A)** 製品のモデル名をお知らせください。
2. **(B)** 製品のデータラベルに印刷されているシリアル番号をお知らせください。
3. **(C)** パーツリストを参照して、シリアル番号が正しいかご確認ください。
4. パーツ番号と数量をお知らせください。マニュアル/カタログのページ番号や参照番号でのご注文はご遠慮ください。
5. お客様のお名前、会社名、顧客ID番号、請求/発送先住所、電話番号、注文書番号をお知らせください。
6. 発送に関するご希望があれば、明記してください。

(D) ∇ - アセンブリを示します
▲ - アセンブリに含まれるパーツを示します

後日確認できるように、設置時に記入してください。

モデルNo. - _____
シリアルNo. - _____
製品のオプション- _____
販売代理店 - _____
販売代理店の電話番号 - _____
顧客ID番号 - _____
設置日 - _____

LT

KAIP UŽSISAKYTI DALIS - žr. diagramà viršuje

Naudokite tik "Tennant" kompanijos tiekiamas arba lygiavertes joms dalis. Dalis galite užsisakyti internetu, telefonu, faksu bei elektroniniu paštu.

Kad užsakymas būtų greitai įvykdytas, laikykitės išvardytų taisyklių.

1. **(A)** Nurodykite mašinos modelį.
2. **(B)** Norodykite mašinos serijos numerį, kurį rasite ant duomenų žymės.
3. **(C)** Įsitikinkite, kad nurodomas tikslus serijos numeris iš dalių sàrašo.
4. Nurodykite dalies numerį ir reikiamà kiekį. Neužsakinėkite pagal puslapius ar nuorodos numerius.
5. Nurodykite savo vardà, kompanijos pavadinimà, kliento ID numerį, sàskaitos išrašymo ir vežimo adresà, telefono numerį ir pirkimo užsakymo numerį.
6. Nurodykite išsamias gabenimo instrukcijas.

(D) ∇ - žymi sistemà
▲ - nurodo sistemos dalis

Prašome užpildyti montavimo metu, siekiant gauti informacijà ateityje.

Modelio nr. - _____
Serijos nr. - _____
Mašinos parinktys - _____
Prekybos atstovas - _____
Komivojažieriaus tel. nr. - _____
Pirkėjo ID numeris - _____
Sumontavimo data - _____

LV

KĀ PASŪTĪT REZERVES DETAĻAS - Skat. diagrammu iepriekš

izmantojiet tikai TENNANT Company piegādātās vai tām līdzvērtīgas rezerves detaļas. Daļas un piegādi var pasūtīt internetā, pa tālruni, pa faksu vai pastu.

Lai nodrošinātu savlaicīgu piegādi, sekojiet zemāk aprakstītajiem soļiem.

1. **(A)** Nosakiet mašīnas modeli.
2. **(B)** Nosakiet mašīnas sērijas numuru uz tehnisko datu uzlīmes.
3. **(C)** Pārliecinieties, ka tiek uzrakstīts attiecīgais sērijas numurs no detaļu saraksta.
4. Nosakiet detaļas numuru un skaitu. Veicot pasūtījumus neatsaucieties uz lappušu vai norādes numuriem.
5. Uzrakstiet savu vārdu, uzņēmuma nosaukumi, klienta identitātes numuru, adresi rēķina piesūtīšanai un piegādei un pirkuma pasūtījuma numuru.
6. Sniedziet detalizētu informāciju par piegādi.

(D) ∇ - nosaka ierīci i
▲ - nosaka detaļas, kas ir komplektā ar ierīci

Veicot uzstādīšanu, lūdzam pierakstīst attiecīgo informāciju izmantošanai turpmāk.

Modeļa Nr. - _____
Sērijas Nr. - _____
Iekārtas papildaprīkojums- _____
Pārdošanas pārst. - _____
Pārdošanas pārst. tālr. Nr. - _____
Klienta identitātes numuru- _____
Uzstādīšanas datums- _____

NL

HOE ONDERDELEN TE BESTELLEN - Zie schema hierboven.

Gebruik alleen onderdelen die door TENNANT Company zijn geleverd of soortgelijke onderdelen. Onderdelen en voorraden kunnen online, per telefoon, fax of schriftelijk besteld worden.

Volg de stappen hieronder om een juiste levering te garanderen.

1. **(A)** Bepaal het machinemodel.
2. **(B)** Lees het serienummer van de machine af van het gegevenslabel.
3. **(C)** Zorg dat het juiste serienummer wordt gebruikt uit de onderdelenlijst.
4. Bepaal het artikelnummer en het aantal. Bestel niet aan de hand van pagina's of referentienummers
5. Geef uw naam, bedrijfsnaam, klantnummer, factuur- en leveringsadres, telefoonnummer en bestelnummer op.
6. Geef gedetailleerde leveringsinstructies op.

(D) ∇ - geeft een eenheid aan
▲ - geeft de onderdelen van de eenheid aan

Vul tijdens installatie de onderstaande gegevens in voor eventueel toekomstig gebruik.

Modelnr. - _____
Serienr. - _____
Machine- opties - _____
Verkoopvert. - _____
Telnr. verkoopvert. - _____
Klantnummer - _____
Installatiedatum - _____

NO

HVORDAN BESTILLE DELER - Se diagram over.

Bruk kun deler levert av TENNANT Company eller ekvivalente deler. Deler og forsyninger kan bestilles online, per telefon, per faks eller per post.

Følg trinnene under for å sikre rask levering.

1. **(A)** Angi maskinmodellen.
2. **(B)** Angi maskinens serienummer fra typeskiltet.
3. **(C)** Forsikre deg om at korrekt serienummer brukes fra delelisten.
4. Angi delenummer og antall. Bestill ikke ut fra side- eller referansenumre.
5. Angi ditt navn, firmanavn, kunde- ID- nummer, fakturerings- og forsendelsesadresse, telefonnummer og innkjøpsordrenummer.
6. Angi detaljerte forsendelsesinstruksjoner.

(D) ▽ - angir en delegruppe
▲ - angir deler inkludert i en delegruppe

Fyll ut ved installasjonstidspunkt for fremtidig bruk.

Modellnr. - _____
Serienr.. - _____
Maskinens tillegg - _____
Salgsrep. - _____
Salgsrep. telefonnr. - _____
Kunde- ID- nummer - _____
Installasjonsdato - _____

PL

JAK ZAMAWIAĆ CZĘŚCI - patrz schemat powyżej.

Należy używać wyłącznie części dostarczanych przez firmę TENNANT Company lub równoważnych. Części i dostawy mogą być zamawiane online, przez telefon, faksem lub pocztą.

Aby zapewnić szybką dostawę, należy przestrzegać następujących wskazówek.

1. **(A)** Określić model maszyny.
2. **(B)** Określić numer seryjny maszyny znajdujący się na tabliczce znamionowej.
3. **(C)** Odszukać ten numer seryjny w wykazie części.
4. Określić numer części i ilość. Nie zamawiać na podstawie numeru strony lub liczby porządkowej wykazu.
5. Podać swoje nazwisko, nazwę firmy, numer identyfikacyjny klienta, adres dostawy i dostarczenia rachunku, numer telefonu i numer zamówienia zakupu.
6. Podać dokładne instrukcje dotyczące dostawy.

(D) ▽ - oznacza zespół
▲ - oznacza część w zespole

Prosimy wpisać datę instalacji do późniejszego wykorzystania.

Nr modelu- _____
Nr seryjny - _____
Opcje maszyny - _____
Przedst. sprzedaży - _____
Nr tel. przedst. sprzed. - _____
Nr ident. klienta - _____
Data instalacji - _____

PTG

COMO ENCOMENDAR PEÇAS - Consulte o diagrama acima.

Utilize apenas peças fornecidas pela TENNANT Company ou equivalentes. As peças e consumíveis podem ser encomendados online, por telefone, fax ou correio.

Siga os passos abaixo para garantir uma entrega rápida.

1. **(A)** Identifique o modelo da máquina.
2. **(B)** Identifique o número de série da máquina que se encontra na etiqueta de dados.
3. **(C)** Certifique- se de que usa o número de série correcto da lista de peças.
4. Identifique o número de produto e a quantidade. Não encomende através de números de página ou de referência.
5. Forneça o seu nome, o nome da empresa, o número de ID do cliente, os endereços de facturação e entrega, o número de telefone e o número da nota de encomenda.
6. Forneça instruções de entrega detalhadas.

(D) ▽ - identifica uma unidade
▲ - identifica peças incluídas numa unidade

Preencha na altura da instalação para futura referência.

Modelo nº - _____
Nº de série - _____
Opções da máquina - _____
Vendedor - _____
Telefone do vendedor - _____
Número de ID do cliente - _____
Data de instalação - _____

RU

КАК ЗАКАЗАТЬ ЗАПЧАСТИ - См. схему ниже.

Используйте только запчасти, поставляемые компанией TENNANT или их аналоги. Запасные части и расходные материалы можно заказать в режиме онлайн, телефоном, факсом или электронной почтой.

Для своевременной доставки следуйте описанным ниже инструкциям.

1. **(A)** Укажите модель машины.
2. **(B)** Укажите серийный номер машины, обозначенный на табличке технических данных.
3. **(C)** Удостоверьтесь, что надлежащий серийный номер перечислен в списке запчастей.
4. Укажите номер детали и нужное количество. Не используйте номера страниц или ссылок.
5. Укажите свое имя, название компании, идентификационный номер покупателя, расчетный адрес и адрес доставки, телефонный номер и номер заказа на покупку.
6. Укажите подробные сведения о доставке.

(D) ▽ - означает узел
▲ - обозначает деталь узла

Во время установки заполните, пожалуйста, эти сведения для того, чтобы ссылаться в дальнейшем.

Модель Э - _____
Серийный Э - _____
Опции машины - _____
Торговый представитель - _____
Телефон торгового представителя - _____
Идент. номер покупателя - _____
Дата установки - _____

SE

BESTÄLLNING AV RESERVDELAR - Se ovanstående schema.

Använd endast delar från Tennant Company eller likvärdiga. Delar och material kan beställas online, telefoniskt, per fax eller post.

Följ nedanstående steg för en snabb leverans.

1. **(A)** Identifiera maskinens modell.
2. **(B)** Identifiera maskinens serienummer på typskylten.
3. **(C)** Kontrollera att rätt serienummer används från dellistan.
4. Identifiera artikelnumret och mängden. Beställ inte med hjälp av sido- eller referensnummer.
5. Uppge ditt namn, företagets namn, kundens ID- nummer, faktura- och leveransadress, telefonnummer och ordernumret vid inköp.
6. Ge detaljerade transportanvisningar.

(D) ▽ - identifierar en modul
▲ - identifierar delar som ingår i en modul

Fyll i vid installation och spar för framtida bruk.

Modellnr. - _____
Serienr. - _____
Tilvalsutrustning - _____
Försäljare - _____
Försäljarens tel.nr. - _____
Kundnummer - _____
Installationsdatum - _____

SK

POSTUP PRI OBJEDNÁVANÍ ČASTÍ - Pozri vyššie uvedený diagram.

Vyu ívajte výhradne dielce dodané spoločnos ou TENNANT, alebo ich ekvivalenty. Dielce a polo ky je mo né objedna online, telefonicky, faxom, alebo poštou.

Na zabezpečenie promptného doručenia sa riaďte nasledovnými krokmi.

1. **(A)** Identifikujte model stroja.
2. **(B)** Z etikety s údajmi identifikujte sériové číslo stroja.
3. **(C)** Ubezpečte sa, e ste zadali správne sériové číslo zo zoznamu dielcov.
4. Identifikujte číslo dielu a mno stvo. Neobjednávajte pomocou čísel strán, alebo referenčných čísel.
5. Zadajte Vaše meno, meno spoločnosti, ID číslo zákazníka, fakturačnú a prepravnú adresu, telefónne číslo a objednávacie číslo dielu.
6. Uveďte podrobné prepravné pokyny.

(D) ▽ - identifikuje sadu
▲ - identifikuje časti sady

Vyplňte prosím pri inštalácii pre prípad potreby v budúcnosti.

č. modelu - _____
Sériové č. - _____
Zvláštne príslušenstvo stroja - _____
Obchodné zastúpenie - _____
Obch. zastúpenie tel. č. - _____
ID č. zákazníka - _____
Dátum inštalácie - _____

SL

NAROČANJE NADOMESTNIH DELOV - glejte zgornjo sliko.

Uporabljajte samo originalne nadomestne dele Tennant ali enakovredne dele. Dele in potrošni material lahko naročite prek spleta, po telefonu, faksu ali pošti.

Za zagotovitev čimbolj hitre dostave sledite spodnjim navodilom.

1. **(A)** Ugotovite model stroja.
2. **(B)** Na ploščici s podatki poiščite serijsko številko stroja.
3. **(C)** Poskrbite, da na seznamu nadomestnih delov poiščete pravilno serijsko številko.
4. Poiščite številko dela in potrebno količino. Pri naročilih ne navajajte strani ali referenčne številke.
5. Navedite svoje ime, ime podjetja, ID številko stranke, naslova za dostavo in izdajo računa, telefonsko številkoin številko naročila.
6. Navedite podrobna navodila za dostavo.

(D) ▽ - označuje sklop
▲ - označuje dele sklopa

Prosimo, da ob vgradnji izpolnite te podatke, da vam bodo v prihodnje na voljo.

Št. modela - _____
Serijska številka - _____
Dodatna oprema stroja - _____
Prodajni predstavnik - _____
Telefonska št. prodajnega predstavnika - _____
Številka stranke - _____
Datum vgradnje - _____

TR

PARÇALARIN SİPARİŞ EDİLMESİ - Yukarıdaki şemaya bakın.

Yalnızca TENNANT Company'den sağlanan veya eşdeğerde parçalar kullanın. Parça veya sarf malzemeleri çevrimiçi olarak, telefonla, faksla veya postayla sipariş edilebilir.

Zamanında teslimatı sağlamak için aşağıdaki adımları izleyin.

1. **(A)** Makine modelini belirtin.
2. **(B)** Veri etiketinden makine seri numarasını belirtin.
3. **(C)** Parça listesinden uygun seri numarasının kullanıldığından emin olun.
4. Parça numarasını ve miktarını belirtin. Sayfa veya referans numaralarını kullanarak sipariş vermeyin.
5. Adınızı, şirketinizin adını, müşteri kimlik numaranızı, faturalama ve sevkıyat adreslerini, telefon numarasını ve satın alma siparişi numarasını belirtin.
6. Ayrıntılı sevkıyat talimatlarını belirtin.

(D) ▽ - bir tertibatı belirtir
▲ - tertibattaki parçaları belirtir

İleri tarihlerde başvurmak için lütfen kurulum sırasında doldurun.

Model No. - _____
Seri No. - _____
Makine Seçenekleri - _____
Satış Temsilcisi - _____
Satış Temsilcisi telefon no. - _____
Müşteri Kimlik Numarası - _____
Kurulum Tarihi - _____

General Recommended Maintenance Items

	Ref.	Part No.	Serial Number	Description	Qty.
▽		9002553	(000000- 003999)	Maint Kit, 400hr, Gas [M20/T20/M30]	1
▲		372575	(000000- 003999)	Sparkplug [Gm]	4
▲		369746	(000000- 003999)	Element, Fltr, Air [Dn]	1
▲		372440	(000000- 003999)	Filter, Fuel [Gm 1.6l/3.0l]	1
▽		9002554	(000000- 001320)	Maint Kit, 400hr, Lpg [M20/T20/M30]	1
▲		372575	(000000- 001320)	Sparkplug [Gm]	4
▲		369746	(000000- 001320)	Element, Fltr, Air [Dn]	1
▲		372615	(000000- 001320)	Filter Kit, Fuelock, Lpg	1
▽		9007382	(001321- 003999)	Maint Kit, 400hr [M20/T20/M30 Lpg 2010]	1
▲		372575	(001321- 003999)	Sparkplug [Gm, 1pick=1plug]	4
▲		369746	(001321- 003999)	Element, Fltr, Air [Dn]	1
▲		9007380	(001321- 003999)	Filter Kit, Fuelock, Lpg	1
▽		9002555	(000000- 003999)	Maint Kit, 800hr, Gas [M20/T20/M30]	1
▲		31613	(000000- 003999)	Strainer, Hyd, 025gpm 100mesh 03psi	1
▲		25122	(000000- 003999)	Cap, Breather, Hyd, 2.4 Ds	1
▲		1021579	(000000- 003999)	Filter Assy, Hyd, 10mic	1
▲		372440	(000000- 003999)	Filter, Fuel [Gm 1.6l/3.0l]	1
▽		9002613	(000000- 001320)	Maint Kit, 800hr, Lpg [M20/T20/M30]	1
▲		31613	(000000- 001320)	Strainer, Hyd, 025gpm 100mesh 03psi	1
▲		25122	(000000- 001320)	Cap, Breather, Hyd, 2.4 Ds	1
▲		1021579	(000000- 001320)	Filter Assy, Hyd, 10mic	1
▲		372615	(000000- 001320)	Filter Kit, Fuelock, Lpg	1
▽		9007381	(001321- 003999)	Maint Kit, 800hr [M20/T20/M30 Lpg 2010]	1
▲		31613	(001321- 003999)	Strainer, Hyd, 025gpm 100mesh 03psi	1
▲		25122	(001321- 003999)	Cap, Breather, Hyd, 2.4 Ds	1
▲		1021579	(001321- 003999)	Filter Assy, Hyd, 10mic	1
▲		9007380	(001321- 003999)	Filter Kit, Fuelock, Lpg	1
		371972	(000000- 003999)	Element, Fltr, Oil, Eng, Spin- On (GM)	1
		393982	(004000-)	Element, Fltr, Oil, Spin- On (Mits)	1
		1048295AM	(000000-)	Filter, Panl, Syn, 4.2 X 20.0 X 30.0	1
		1027290	(000000-)	Filter, Soltn, 20mesh, Pm12 3.1d 02.6l	1
		87866	(000000-)	Key, Ignition [Set Of 2]	1
		372603	(000000- 003999)	Wire Set, Sparkplug [Set Of 4, 1.6l]	1
		20833	(000000-)	Wheel, 03.0d 1.38w 0.50b	2
		372571	(000000-)	Belt, Ribbed, 39.0l	1
		1024586	(000000-)	Side Door Inner Skirt	2
		1019295	(000000-)	Side Door Outer Skirt	2
		1033269	(000000-)	Front Tabbed Skirt	1
		1033549	(000000-)	Rear Skirt	1
		1033548	(000000-)	Rear Recirculation Flap	1
		9010622	(004000- 004582)	Plug, Spark	4
		9014160	(004583-)	Plug, Spark	4

General Recommended Maintenance Items

Ref.	Part No.	Serial Number	Description	Qty.
	1035067	(000000-)	Linard Front Squeegee - Std.	1
	1035052	(000000-)	Linatex Rear Squeegee - Std.	1
	83874	(000000-)	Linatex Rear Squeegee End Gasket	2
	1031011	(000000-)	Linatex Side Squeegee	2
	1025005	(000000- 001278)	Linatex Side Brush Squeegee	1
	1046980	(001279- 004481)	Blade, Sqge, Side Brush, Linatex	1
	1073414	(004482-)	Blade, Sqge, Side Brush, Linatex	1
	1047238	(001279- 004481)	Blade, Sqge, Side Brush, Linatex	1
	1073415	(004482-)	Blade, Sqge, Side Brush, Linatex	1
	1038681	(000000-)	Urethane Front Squeegee	1
	1038680	(000000-)	Urethane Rear Squeegee	1
	1031823	(000000-)	Urethane Side Squeegee	2
	1027716	(000000- 001278)	Urethane Side Brush Squeegee	1
	1059091	(001279- 004481)	Blade, Sqge, Side Brush, Urethane	1
	1073413	(004482-)	Blade, Sqge, Side Brush, Urethane	1
	1059092	(001279- 004481)	Blade, Sqge, Side Brush, Urethane	1
	1073416	(004482-)	Blade, Sqge, Side Brush, Urethane	1
	16411	(000000-)	Paint, Airdry, Off- White, 12oz (Not Europe)	1
	16412	(000000-)	Paint, Airdry, Teal, 12oz, Solid (Not Europe)	1
	377540	(000000-)	Paint, Airdry, Blk, 12oz (Not Europe)	1
	377538	(000000-)	Paint, Airdry, Gray, 12oz [Enamel] (Not Europe)	1
	377537	(000000-)	Paint, Airdry, Iron Gray,12oz[Pwdr Coat] (Not Europe)	1
	1057710	(000000-)	Oil, Hyd [El, Iso 100, 01gal]	1
	1057711	(000000-)	Oil, Hyd [El, Iso 100, 05gal]	1
	1069019	(000000-)	Oil, Hyd [El, Iso 68, 01gal]	1
	1069020	(000000-)	Oil, Hyd [El, Iso 68, 05gal]	1
	1057707	(000000-)	Oil, Hyd [El, Iso 32, 01gal]	1
	1057708	(000000-)	Oil, Hyd [El, Iso 32, 05gal]	1
	99321	(000000-)	Oil, Hydraulic 68 [20l] (CE ONLY)	1

SECTION 2

Contents **Page**

Fig. 1 - Brushes, Replacement, Scrub Head 2-3
Fig. 2 - Brushes, Replacement, Side Brush 2-4
Fig. 3 - Main Frame Group 2-6
Fig. 4 - Operator Station 2-8
Fig. 5 - Operator Station Insulation Group 2-10
Fig. 6 - Instrument Panel Group 2-12
Fig. 7 - Seat Group 2-14
Fig. 8 - Steering Group 2-16
Fig. 9 - Front Cover Group 2-18
Fig. 10 - Engine Cover Group 2-20

GM Engine **Page**

Fig. 11 - GM Engine and Mount Group (000000- 003999) 2-22
Fig. 12 - GM Engine EFI Group, Gasoline (000000- 001320) 2-24
Fig. 13 - GM Engine EFI Group, Gasoline (001321- 003999) 2-26
Fig. 14 - GM Engine EFI Group, LPG (000000- 003999) 2-28
Fig. 15 - GM Engine Vaporizer Group, LPG (000000- 001320) 2-30
Fig. 16 - GM Engine Vaporizer Group, LPG (001321- 003999) 2-32
Fig. 17 - GM Engine Air Cleaner Group, Gasoline (000000- 003999) 2-34
Fig. 18 - GM Engine Air Cleaner Group, LPG (000000- 003999) 2-36
Fig. 19 - GM Engine Alternator and Fan Group (000000- 003999) . . . 2-38
Fig. 20 - GM Engine Muffler Group (000000- 003999) 2-40
Fig. 21 - GM Engine Radiator and Mount Group (000000- 001249) . 2-42
Fig. 22 - GM Engine Radiator and Mount Group (001250- 003999) . 2-44
Fig. 23 - GM Engine Radiator Hose Group (000000- 003999) 2-46

Mitsubishi Engine **Page**

Fig. 24 - Mitsubishi Engine and Mount Group, Gas (004000-) . . 2-48
Fig. 25 - Mitsubishi Engine and Mount Group, LPG (004000-) . . 2-50
Fig. 26 - Mitsubishi Engine EFI Group, Gasoline (004000-) 2-52
Fig. 27 - Mitsubishi Engine EFI Group, LPG (004000-) 2-54
Fig. 28 - Mitsubishi Engine Air Cleaner Group, Gasoline (004000-) 2-56
Fig. 29 - Mitsubishi Engine Air Cleaner Group, LPG (004000-) . . . 2-58

Mitsubishi Engine **Page**

Fig. 30 - Mitsubishi Engine Alternator and Fan Group (004000-) 2-60
Fig. 31 - Mitsubishi Engine Muffler Group (004000-) 2-62
Fig. 32 - Mitsubishi Engine Radiator and Mount Group (004000-) . . 2-64
Fig. 33 - Mitsubishi Engine Radiator Hose Group (004000-) 2-66

Contents **Page**

Fig. 34 - Engine Fuel Tank Group, Gasoline 2-68
Fig. 35 - Engine Fuel Tank Group, LPG . . . 2-70
Fig. 36 - Battery and Electrical Group 2-72
Fig. 37 - Wheel Group, Front Drive 2-74
Fig. 38 - Wheel and Brake Group 2-76
Fig. 39 - Brake Pedal Linkage Group 2-78
Fig. 40 - Directional Pedal Group 2-80
Fig. 41 - Hydraulic Pump Linkage Group . . 2-82
Fig. 42 - Hopper Lift Arms Group 2-84
Fig. 43 - Hopper and Debris Screen Group 2-86
Fig. 44 - Hopper Cover and Dust Filter Group 2-88
Fig. 45 - Hopper Bumper Group 2-90
Fig. 46 - Hopper Dump Door Group 2-92
Fig. 47 - Brush Drive Group, Left Side 2-94
Fig. 48 - Brush Drive Group, Right Side . . . 2-96
Fig. 49 - Brush Head Lift Group 2-98
Fig. 50 - Brush Head Skirt Group 2-100
Fig. 51 - Squeegee Lift Group, Rear 2-102
Fig. 52 - Squeegee Group, Rear 2-104
Fig. 53 - Squeegee Linkage Group, Rear . 2-106
Fig. 54 - Squeegee Group, Right Side . . . 2-108
Fig. 55 - Squeegee Lift Group, Right Side 2-110
Fig. 56 - Squeegee Group, Left Side 2-112
Fig. 57 - Squeegee Lift Group, Left Side . 2-114
Fig. 58 - Solution Tank Group 2-116
Fig. 59 - Solution Tank Drain Group 2-120
Fig. 60 - Solution Control Group 2-122
Fig. 61 - Recovery Tank Group 2-124
Fig. 62 - Recovery Tank Drain Group 2-126
Fig. 63 - Vacuum Fan Group, Scrubbing (000000- 004454) 2-128
Fig. 64 - Vacuum Fan Group, Scrubbing (004455-) 2-130
Fig. 65 - Vacuum Fan Group, Sweeping . . 2-132
Fig. 66 - Hydraulic Schematic (000000- 001462) 2-134
Fig. 67 - Hydraulic Schematic (001463-) 2-136
Fig. 68 - Hydraulic Hose Group, Steering and Propel 2-138
Fig. 69 - Hydraulic Hose Group, Pump and Vacuum Fan (000000- 004454) 2-140
Fig. 70 - Hydraulic Hose Group, Pump and Vacuum Fan (004455-) . 2-142

Contents **Page**

Fig. 71 - Hydraulic Hose Group, Brush and Hopper 2-144
Fig. 72 - Hydraulic Hose Group, Squeegee Lift 2-146
Fig. 73 - Hydraulic Pumps Group 2-148
Fig. 74 - Hydraulic Cooler and Tubes Group 2-150
Fig. 75 - Hydraulic Reservoir Group 2-152
Fig. 76 - Hydraulic Valve Group 2-154

GM Engine **Page**

Fig. 77 - GM Electrical Schematic (000000- 001544) 2-156
Fig. 78 - GM Electrical Schematic (001545- 003999) 2-164
Fig. 79 - GM Electrical Schematic, Gasoline Engine Harness (000000- 001320) 2-172
Fig. 80 - GM Electrical Schematic, Gas Engine Harness (001321- 003999) 2-174
Fig. 81 - GM Electrical Schematic, LPG Engine Harness (000000- 001320) 2-176
Fig. 82 - GM Electrical Schematic, LPG Engine Harness (001321- 003999) 2-178

Mitsubishi Engine **Page**

Fig. 83 - Mitsubishi Electrical Schematic (004000-) 2-180
Fig. 84 - Mitsubishi Electrical Schematic, Gas Engine Harness (004000-) 2-188
Fig. 85 - Mitsubishi Electrical Schematic, LPG Engine Harness (004000-) 2-190

Contents **Page**

Fig. 86 - Electrical Wire Harness Group, Main 2-192
Fig. 87 - Electrical Wire Harness Group, Headlight 2-199
Fig. 88 - Electrical Wire Harness Group, Hopper 2-200
Fig. 89 - Electrical Wire Harness Group, Hopper Cover 2-202
Fig. 90 - Electrical Wire Harness Group, Gasoline/LPG Engine 2-204
Fig. 91 - Label Group 2-206

Fig. 1 - Brushes, Replacement, Scrub Head

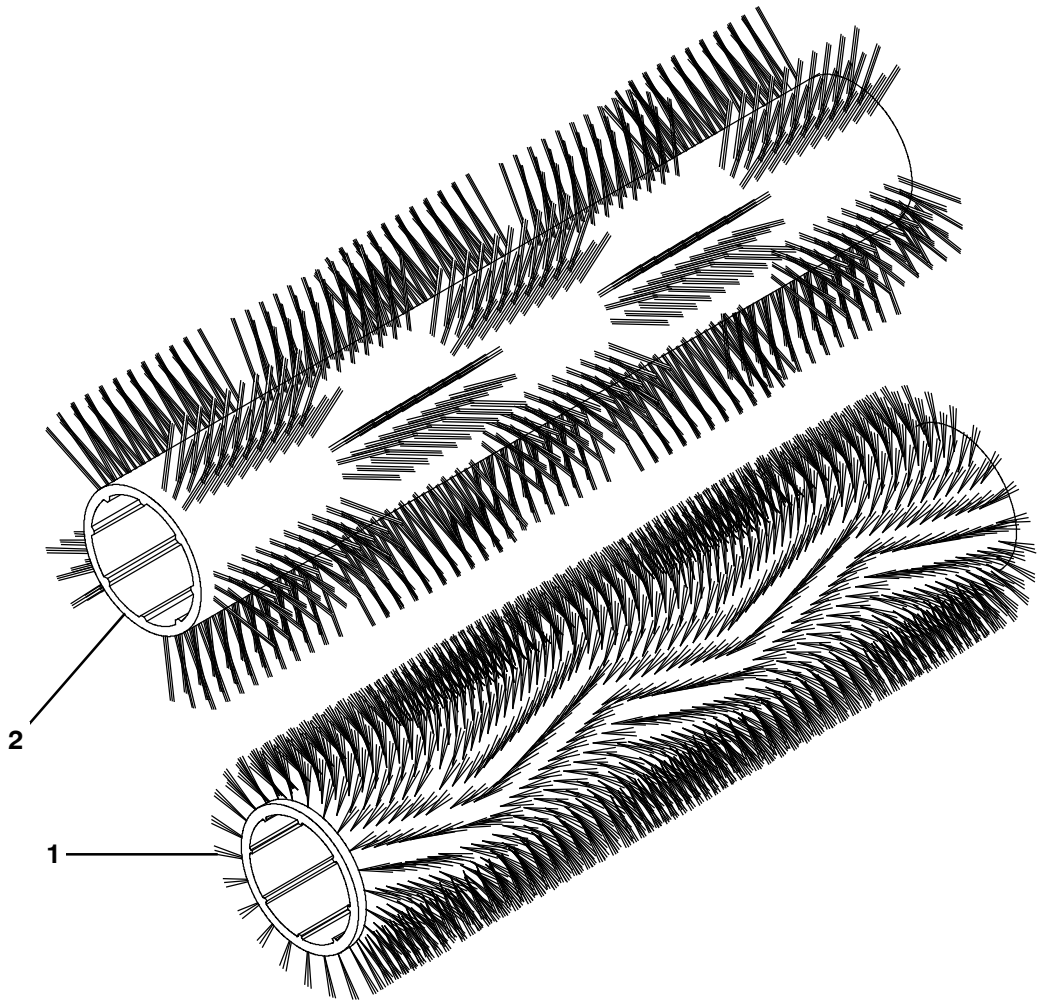

354408 - M30

Ref.	Part No.	Serial Number	Description	Qty.
1	1033375	(000000-)	Brush, Sweep / Scrub, 48L, 24 Sr, Polypropylene	2
1	1033372	(000000-)	Brush, Sweep / Scrub, 48L, 24 Sr,Super Abrasive	2
1	1033246	(000000-)	Brush, Sweep / Scrub, 48L, 24 Sr, Polyester	2
1	1033374	(000000-)	Brush, Sweep / Scrub, 48L, 24 Sr, Heavy Duty Polypropy-lene	2
2	1038430	(000000-)	Brush, Sweep / Scrub, 48L, Wndw, Polypropylene	2
2	1059641	(000000-)	Brush, Sweep / Scrub, 48L, Wndw, Super Abrasive	2

Fig. 2 - Brushes, Replacement, Side Brush

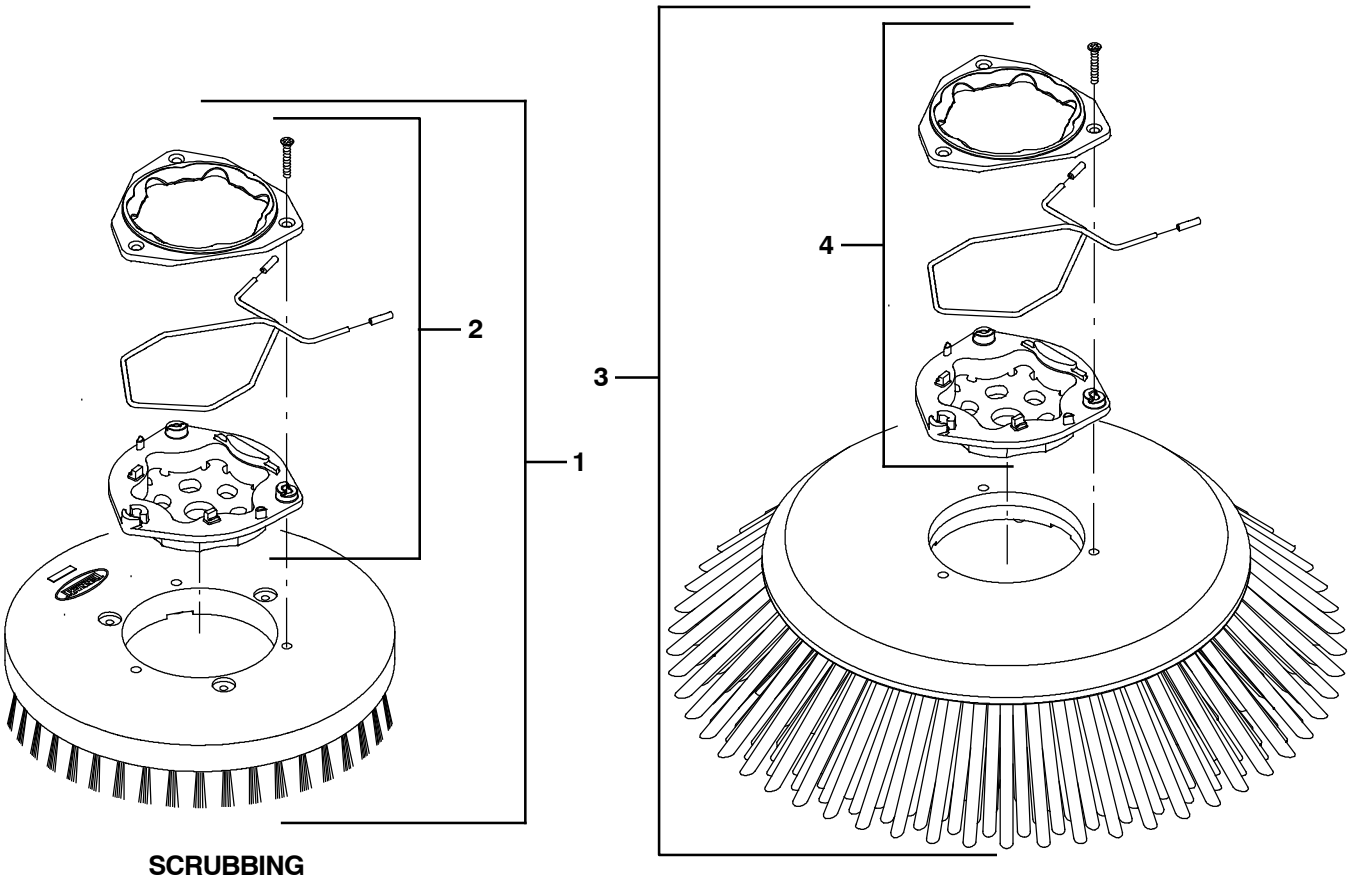

SCRUBBING SIDE BRUSH

SWEEPING SIDE BRUSH

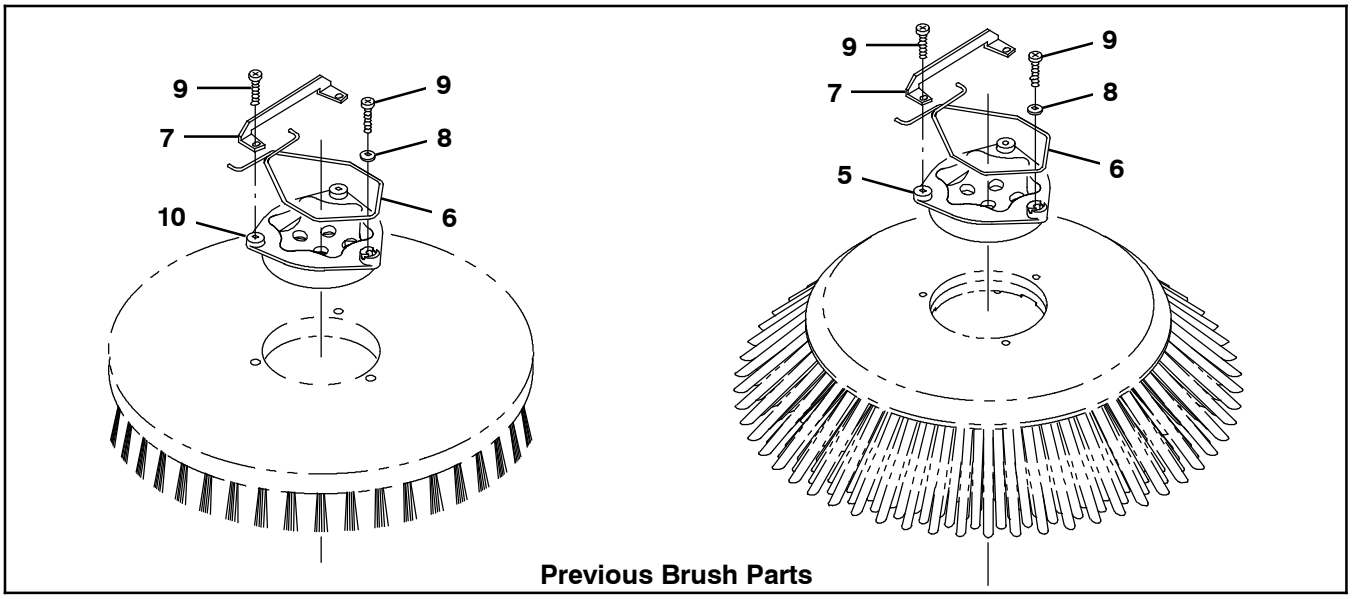

Previous Brush Parts

354584

Fig. 2 - Brushes, Replacement, Side Brush

	Ref.	Part No.	Serial Number	Description	Qty.
▽	1	1220235	(000000-)	Brush Assy, Disk, Scb, 16.0d, Nylon	1
▲	2	9014662	(000000-)	Brush Kit, Hub Assy, Drive, Ci [Hdpe In]	1
▽	1	1220236	(000000-)	Brush Assy, Disk, Scb, 16.0d, Heavy Duty Polypropylene	1
▲	2	9014662	(000000-)	Brush Kit, Hub Assy, Drive, Ci [Hdpe In]	1
▽	1	1221543	(000000-)	Brush Assy, Disk, Scb, 16.0d, Super Abrasive	1
▲	2	9014662	(000000-)	Brush Kit, Hub Assy, Drive, Ci [Hdpe In]	1
▽	3	1220185	(000000-)	Brush Assy, Disk, Swp, 24.0d, Polypropylene	1
▲	4	9014666	(000000-)	Brush Kit, Hub Assy, Drive, Ci [Uhmw]	1
				Previous Brush Parts	
	5	1017368	(000000-)	Hub, Drive, Brush, Disk, 3hole 5.8bc	1
	6	14838	(000000-)	Spring, Wir, 0.16d, Brush Retaining	1
	7	24299	(000000-)	Bracket, Retainer, Spring	1
	8	01684	(000000-)	Washer, Flat, 0.27b 0.69d .05, Ss	1
	9	32746	(000000-)	Screw, Pan, Phl, M6 X 1.00 X 35, Ss	3
	10	15539	(000000-)	Hub, Drive, Brush, Disk, 3hole 5.8bc[6t]	1
		1042500	(000000-)	Brush Assy, Disk, Scrub, 16.0 D, Heavy Duty Polypropylene (Replaced by 1220236)	1
		1042504	(000000-)	Brush Assy, Disk, Scrub, 16.0 D, Super Abrasive (Replaced by 1221543)	1
		1042499	(000000-)	Brush Assy, Disk, Scrub, 16.0D, Nylon (Replaced by 1220235)	1
		1027688	(000000-)	Brush Assy, Disk, Sweep, 24.oD, Polypropylene (Replaced by 1220185)	1

Fig. 3 - Main Frame Group

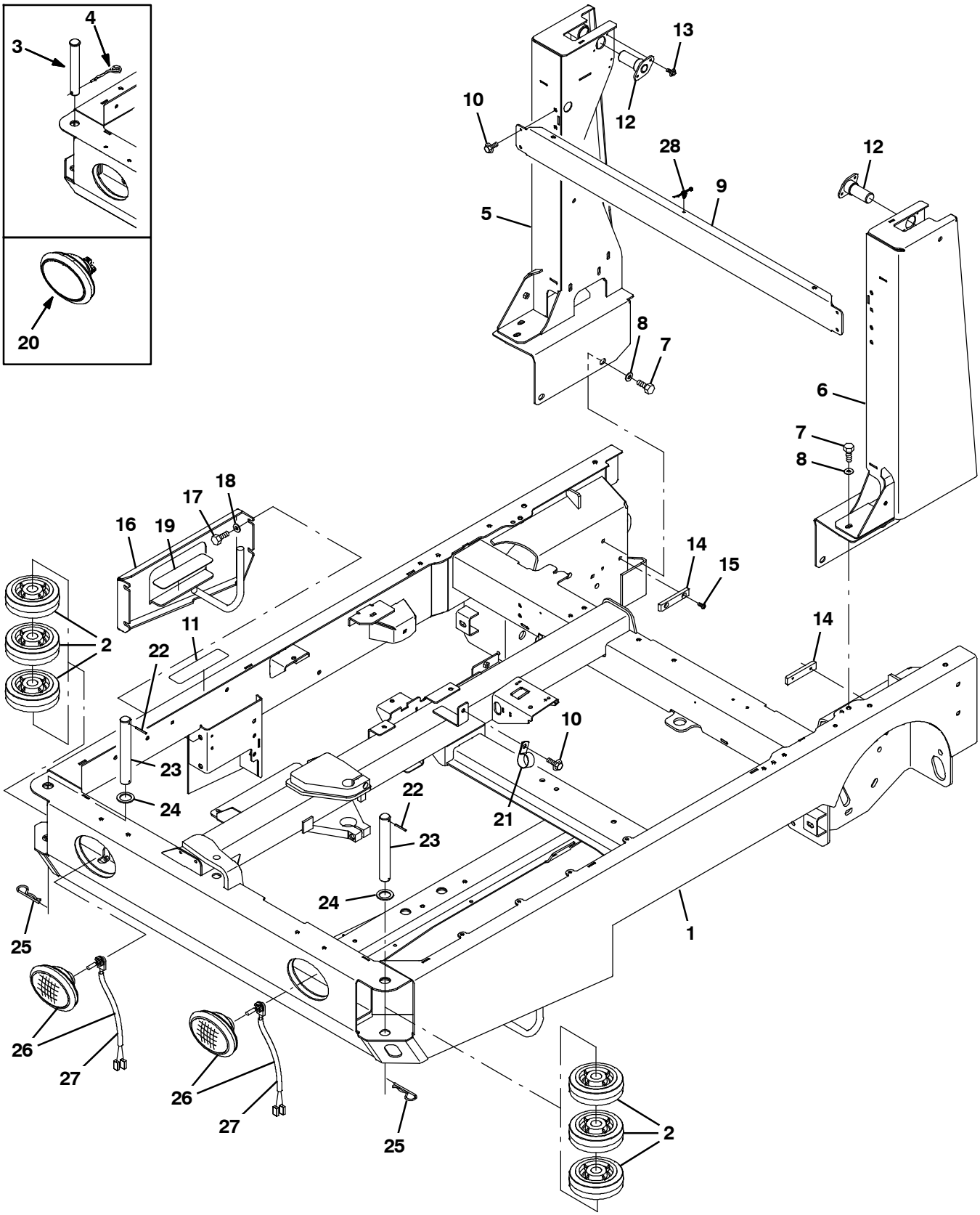

354600

Fig. 3 - Main Frame Group

	Ref.	Part No.	Serial Number	Description	Qty.
	1	9003987	(000000-)	Frame Wldt, Main, Replmt [M30]	1
	2	1060130	(000000-)	Wheel, 06.0D 2.00W 1.19B, Gray Rbr	6
	3	9006334	(000000- 001248)	Pin Kit, Wheel, Ci [M20/T20/M30]	2
	4	761490	(000000- 001248)	Pin, Cotter, hair, Dbl	2
	5	9003988	(000000-)	Tower Wldt, Lift, Rh, Replmt [M30]	1
	5	9004991	(000000-)	Tower Wldt, Lift, Rh, Replmt, TJ (Japan Only)	1
	5	9004992	(000000-)	Tower Wldt, Lift, Rh, Replmt, CE (CE Only)	1
	6	9003989	(000000-)	Tower Wldt, Lift, Lh, Replmt [M30]	1
	6	9004989	(000000-)	Tower Wldt, Lift, Lh, Replmt, TJ (Japan Only)	1
	6	9004990	(000000-)	Tower Wldt, Lift, Lh, Replmt, Ce (CE Only)	1
	7	39283	(000000-)	Screw, Hex, M10 X 1.50 X 25, 8.8	10
	8	32492	(000000-)	Washer, Flat, 0.38, Std	10
	9	1032174	(000000-)	Channel, Upper, Tower, Lift	1
	10	1037346	(000000-)	Screw, Hex, M8 X 1.25 X 25, 9.8, Sems	5
	11	58819	(000000-)	Tread, Non- Skid, 03.0w 11.6l	1
	12	1019251	(000000-)	Pin Wldt, Pivot, Hppr	2
	13	361339	(000000-)	Screw, Hex, M6 X 1.00 X 16, Fmg	4
	14	1024648	(000000-)	Block, Centering	2
	15	09164	(000000-)	Screw, Pan, Phl, M6 X 1.00 X 20, 4.8	4
	16	1027916	(000000-)	Panel Wldt, Filler	1
	17	12317	(000000-)	Screw, Hex, M10 X 1.50 X 30, Ss	4
	18	01686	(000000-)	Washer, Flat, 0.44b 1.00d .08, Ss	4
	19	363458	(000000-)	Tread, Non- Skid, 01.9w 08.0l	1
▽	20	1019225	(000000- 001486)	Headlight, 12vdc, 27watt, 2.1a, Oval (Rpl by 1060942)	2
▲		1031826	(000000- 001486)	Lamp, 12vdc [Speaker]	1
▲		1031827	(000000- 001486)	Receptacle, Lamp [Speaker]	1
	21	53466	(000000-)	Clamp, Cable, Stl, 1.50d X 1.00w, 1hole	1
	22	23146	(001249-)	Pin, Roll, .187d X 1.62l, .187/.192	2
	23	1053838	(001249-)	Pin, 30mmd X 215mml	2
	24	1062566	(001249-)	Washer, Flat, 1.26B 1.88D .13, Stl, Pl	2
	25	34411	(001249-)	Pin, Cotter, Hair, 1.00d .178 Wir	2
▽	26	1060942	(001487-)	Headlight, 12Vdc, Oval, Halogen	2
▲	27	9007513	(001487-)	Lamp, Halogen [Speaker]	1
	28	1210807	(000000-)	Wire, Tie [W/.25” Fir Tree Clip]	1

Fig. 4 - Operator Station

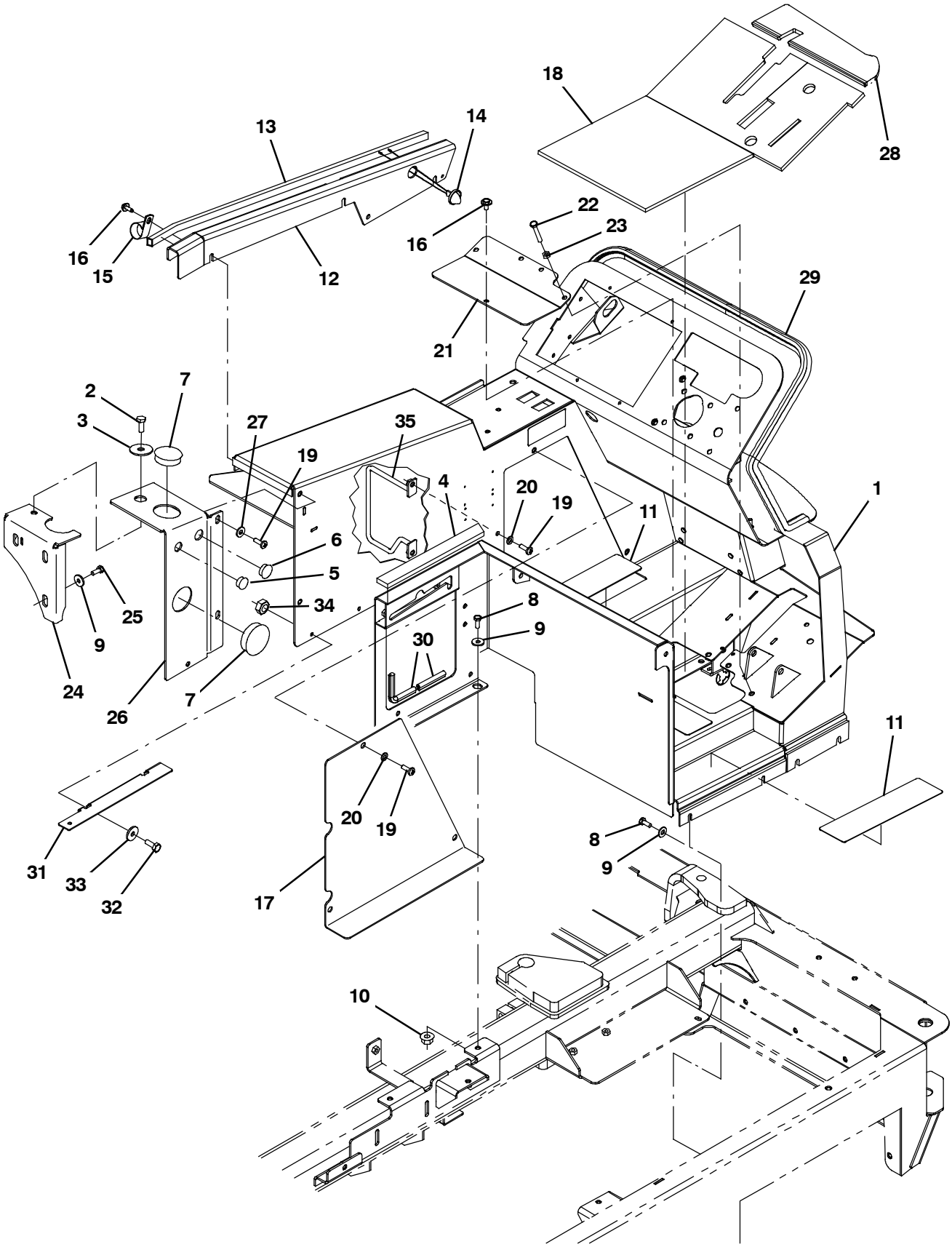

354601 - G/LP

Fig. 4 - Operator Station

Ref.	Part No.	Serial Number	Description	Qty.
1	9002409	(000000-)	Panel Wldt, Gas, Replmt	1
1	9002380	(000000-)	Panel Wldt, Gas, Replmt [W/Fast]	1
1	9002381	(000000-)	Panel Wldt, Gas, W/ Es, Replmt	1
1	9003422	(000000-)	Panel Wldt, Gas, Replmt, Tj	1
1	9003425	(000000-)	Panel Wldt, Gas, Replmt, Tj[W/Fast]	1
1	9003428	(000000-)	Panel Wldt, Gas, Replmt, Tj, W/ Es	1
1	9003431	(000000-)	Panel Wldt, Lpg, Replmt	1
1	9003432	(000000-)	Panel Wldt, Lpg, Replmt [W/Fast]	1
1	9003433	(000000-)	Panel Wldt, Lpg, W/ Es, Replmt	1
1	9003423	(000000-)	Panel Wldt, Lpg, Replmt, Tj	1
1	9003426	(000000-)	Panel Wldt, Lpg, Replmt, Tj[W/Fast]	1
1	9003429	(000000-)	Panel Wldt, Lpg, Replmt, Tj, W/ Es	1
1	9003434	(000000-)	Panel Wldt, Lpg, Replmt, Ce	1
1	9003435	(000000-)	Panel Wldt, Lpg, Replmt, Ce[W/FaST]	1
1	9003436	(000000-)	Panel Wldt, Lpg, Replmt, Ce, W/ Es	1
2	39283	(000000-)	Screw, Hex, M10 X 1.50 X 25, 8.8	1
3	04414	(000000-)	Washer, Flat, 0.53b 1.88d .12, Stl, Pl	1
4	1047295	(000000-)	Seal, Foam, 0.50	1
5	82727	(000000-)	Plug, Hole, Rnd, 0.88h .03- .12, Blk Nyl	1
6	01493	(000000-)	Plug, Hole, Rnd, 1.00h .03- .12, Blk Nyl	1
7	1030017	(000000-)	Plug, Hole, Rnd, 2.50h .03- .25, Blk Nyl	2
8	16931	(000000-)	Screw, Hex, M8 X 1.25 X 20, 8.8	6
9	1017218	(000000-)	Washer, Flat, 0.32b 1.00d .12, Ss	9
10	07791	(000000-)	Nut, Hex, Flng, M8 X 1.25	1
11	58819	(000000-)	Tread, Non- Skid, 03.0w 11.6l	2
12	1034762	(000000-)	Panel, Adj	1
13	1047188	(000000-)	Seal, Foam, 1.18	1
14	9004492	(000000-)	Light Assy, Panel, Side	1
15	53466	(000000-)	Clamp, Cable, Stl, 1.50d X 1.00w, 1hole	5
16	1037346	(000000-)	Screw, Hex, M8 X 1.25 X 25, 9.8, Sems	6
17	1021834	(000000-)	Panel, Access, Door	1
18	1027218	(000000-)	Mat, Floor	1
19	1031665	(000000-)	Screw, Pan, M8 X 1.25 X 25, Blk	7
20	39349	(000000-)	Washer, Flat, 0.31, Sae	5
21	1022699	(000000-)	Panel, Access, Floor	1
22	363976	(000000-)	Screw, Hex, M8 X 1.25 X 60, 8.8, Fl	1
23	39311	(000000-)	Nut, Hex, Std, M8 X 1.25	1
24	1035997	(000000-)	Bracket Wldt, Mtg, Tank	1
25	09740	(000000-)	Screw, Hex, M8 X 1.25 X 20, Ss	3
26	1033975	(000000-)	Bracket, Mtg	1
27	32491	(000000-)	Washer, Flat, 0.31, Std	2
28	1027267	(000000-)	Mat, Floor	1
29	1020904	(000000-)	Seal, Panl, Instmt	1
30	1020168	(000000-)	Molding, Afmkt, Trim, Pvc, .08 .11, 01ft	1
31	1047169	(000000-)	Bracket, Mtg, Insulation	1
32	06942	(000000-)	Screw, Hex, M6 X 1.00 X 16, 8.8	2
33	32490	(000000-)	Washer, Flat, 0.25, Std	2
34	08708	(000000-)	Nut, Hex, Lock, M6 X 1.00, Nl	2
35	1071868	(004000-)	Bracket Wldt, Mtg, Hose [M30]	1

Fig. 5 - Operator Station Insulation Group

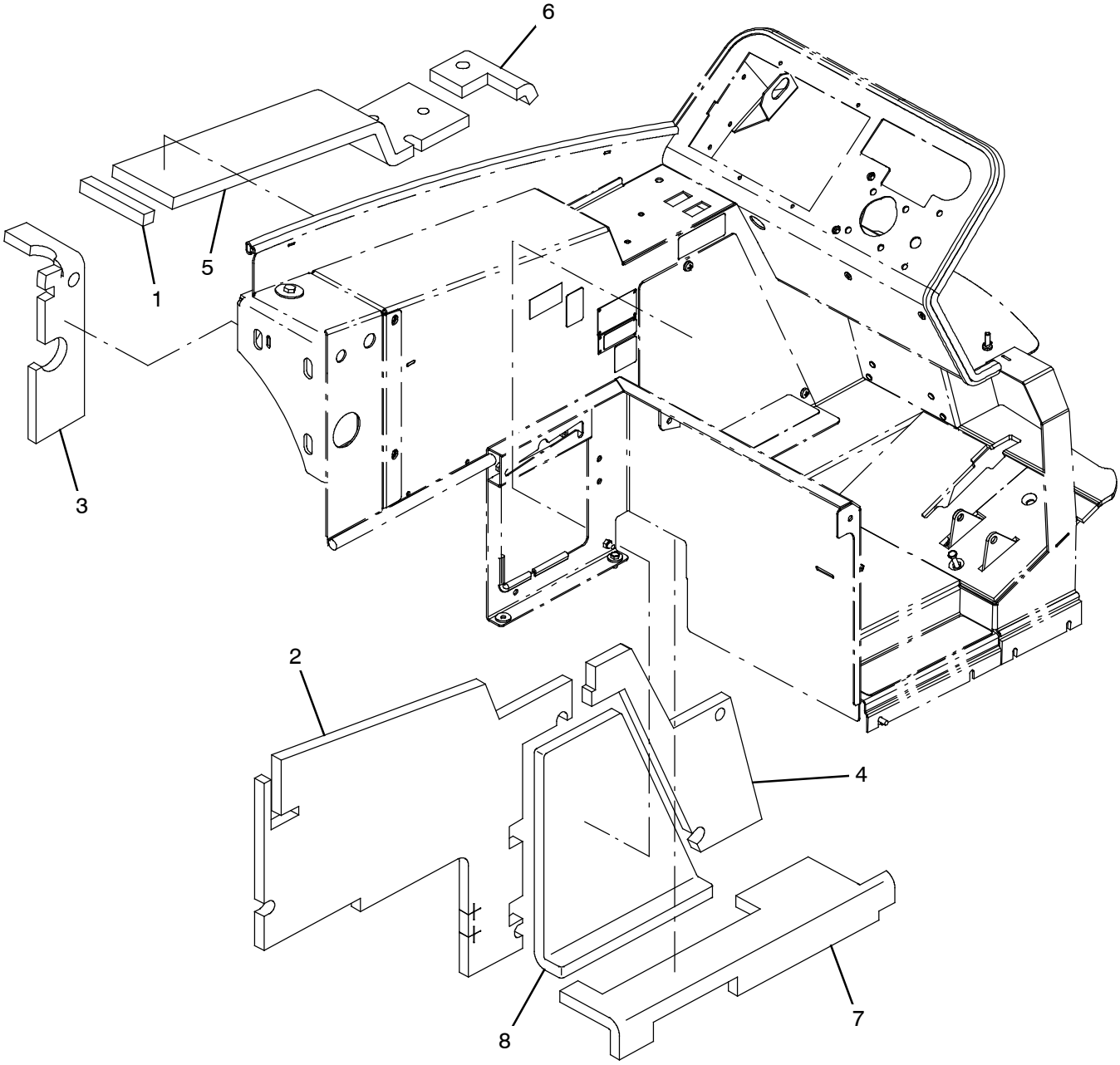

354602

Fig. 5 - Operator Station Insulation Group

Ref.	Part No.	Serial Number	Description	Qty.
1	1034769	(000000-)	Insulation, Flame- Retardant, 0.75- 0.88	1
2	1034765	(000000-)	Insulation, Flame- Retardant, 0.75- 0.88	1
3	1040841	(000000-)	Insulation, Flame- Retardant, 0.75- 0.88	1
4	1023464	(000000-)	Insulation, Flame- Retardant, 0.75- 0.88	1
5	1034764	(000000-)	Insulation, Flame- Retardant, 0.75- 0.88	1
6	1034766	(000000-)	Insulation, Flame- Retardant, 0.75- 0.88	1
7	1034768	(000000-)	Insulation, Flame- Retardant, 0.75- 0.88	1
8	1023569	(000000-)	Insulation, Flame- Retardant, 0.75- 0.88	1

Fig. 6 - Instrument Panel Group

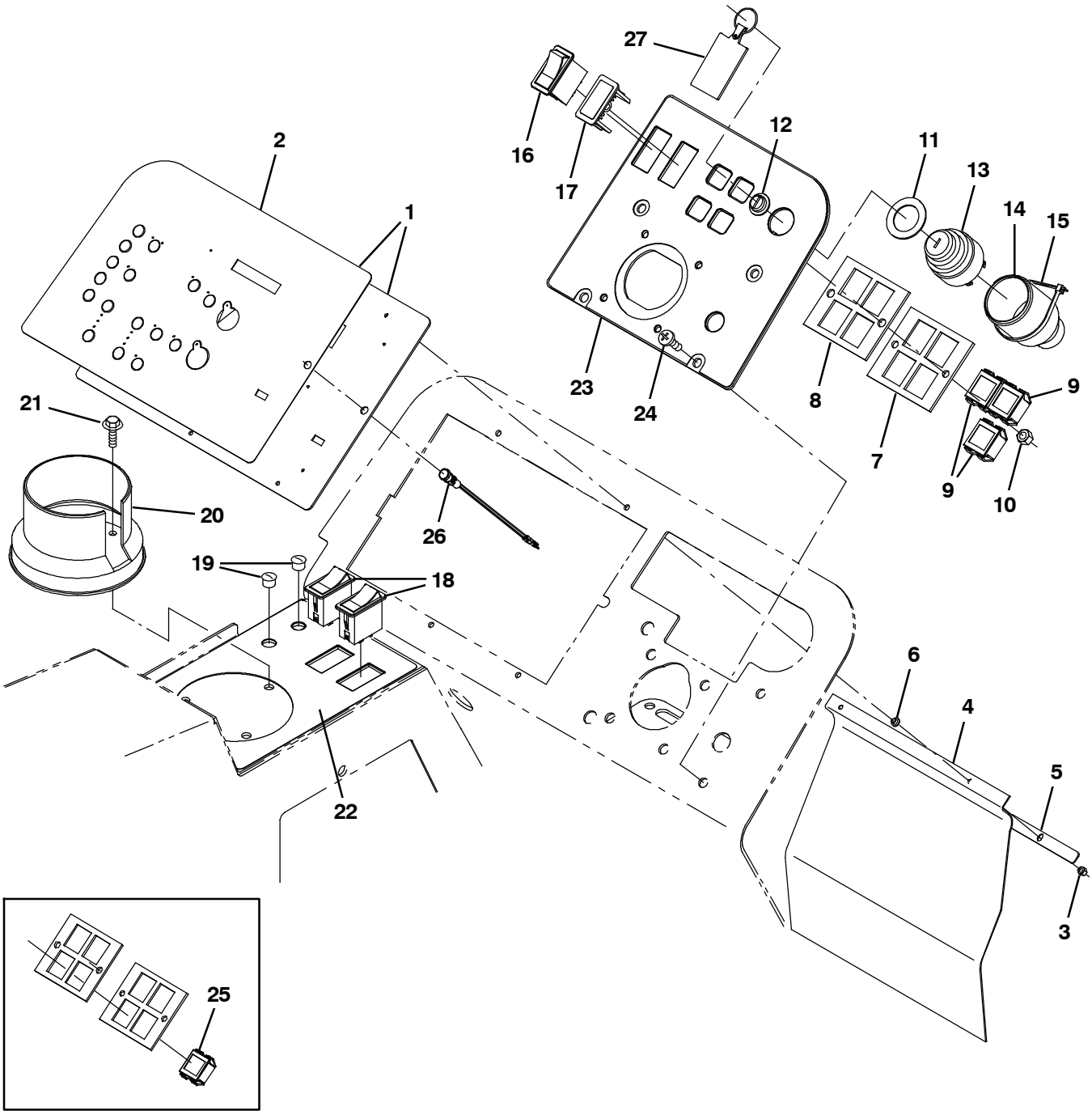

354410 - G/LP, M20, M30

Fig. 6 - Instrument Panel Group

	Ref.	Part No.	Serial Number	Description	Qty.
▽	1	9003453	(000000-)	Panel Kit, Instmt, Repair [M20/M30]	1
▲	2	9002435	(000000-)	Label Kit, Panel, Replmt [M20/M30]	1
▽	1	9007912	(000000-)	Panel, Kit, Instmt Replmt [M20/M30 ec- H20]	1
▲	2	9007913	(000000-)	Label Kit, Panel, Replmt [M20/M30 ec- H20]	1
	3	16968	(000000-)	Nut, Hex, Lock, #08- 32, Nl	4
	4	1028769	(000000-)	Flap, Battery	1
	5	1028772	(000000-)	Bar, Flat, Ss 0.06, 00.50 X 10.00l, 2sl	1
	6	1029362	(000000-)	Washer, Shld, Nyl [8- 32]	4
	7	361071	(000000-)	Plate, Mtg, Light	1
	8	361073	(000000-)	Seal, Rbr, Clsd, 0.13, Instmt Panl	1
	9	361075	(000000-)	Light, Panl, 14vdc, 1.1 X 1.0	3
	10	08712	(000000-)	Nut, Hex, Lock, M6 X 1.00, Nl, Ss	2
	11	73736	(000000-)	Washer, Flat, 1.15b 1.75d .08, Stl	1
	12	382516	(000000-)	Boot, .63id .29l .90w	1
▽	13	87536	(000000-)	Switch, Ignition [Ku]	1
▲		87866	(000000-)	Key, Ignition [Set Of 2]	1
	14	383165	(000000-)	Boot, Switch, Ignition	1
	15	49266	(000000-)	Tie, Cable, Nyl, 07.3l .19w 1.8 Max D	2
	16	392171	(000000-)	Switch, Rocker, Dpdt, On / Off / On	1
	17	398501	(000000-)	Plug, Hole, Rt, Rocker Switch, .87 X 1.7	1
	18	398508	(000000-)	Switch, Rocker, Dpdt, Mom / Off / Mom	2
	19	56992	(000000-)	Plug, Hole, Rnd, 0.50h .03- .12, Blk Nyl	1
	20	223599	(000000-)	Cup Holder, Rwk	1
	21	1040467	(000000-)	Screw, Hex, M6 X 1.0 X 20, 9.8, Sems	3
	22	1024287	(000000-)	Label, Switch, Rocker [M20/M30]	1
	23	9004880	(000000-)	Panel, Instmt, Rh, Gas, Replmt	1
	23	9002391	(000000-)	Panel, Instmt, Rh, Lpg, Replmt	1
	23	9002392	(000000-)	Panel, Instmt, Rh, Lpg, Replmt, Ce / Tj	1
	24	1031665	(000000-)	Screw, Pan, M8 X 1.25 X 25, Blk	4
	25	361075	(000000- 001138)	Light, Panl, 14vdc, , 1.1 X 1.0	1
	26	1041822	(000000-)	Light, Led, .312D, 2 Volt [Tri- Color] (ec- H20 only)	1
	27	1075003	(000000-)	Keychain, Rectangle, Parts & Service	1

Fig. 7 - Seat Group

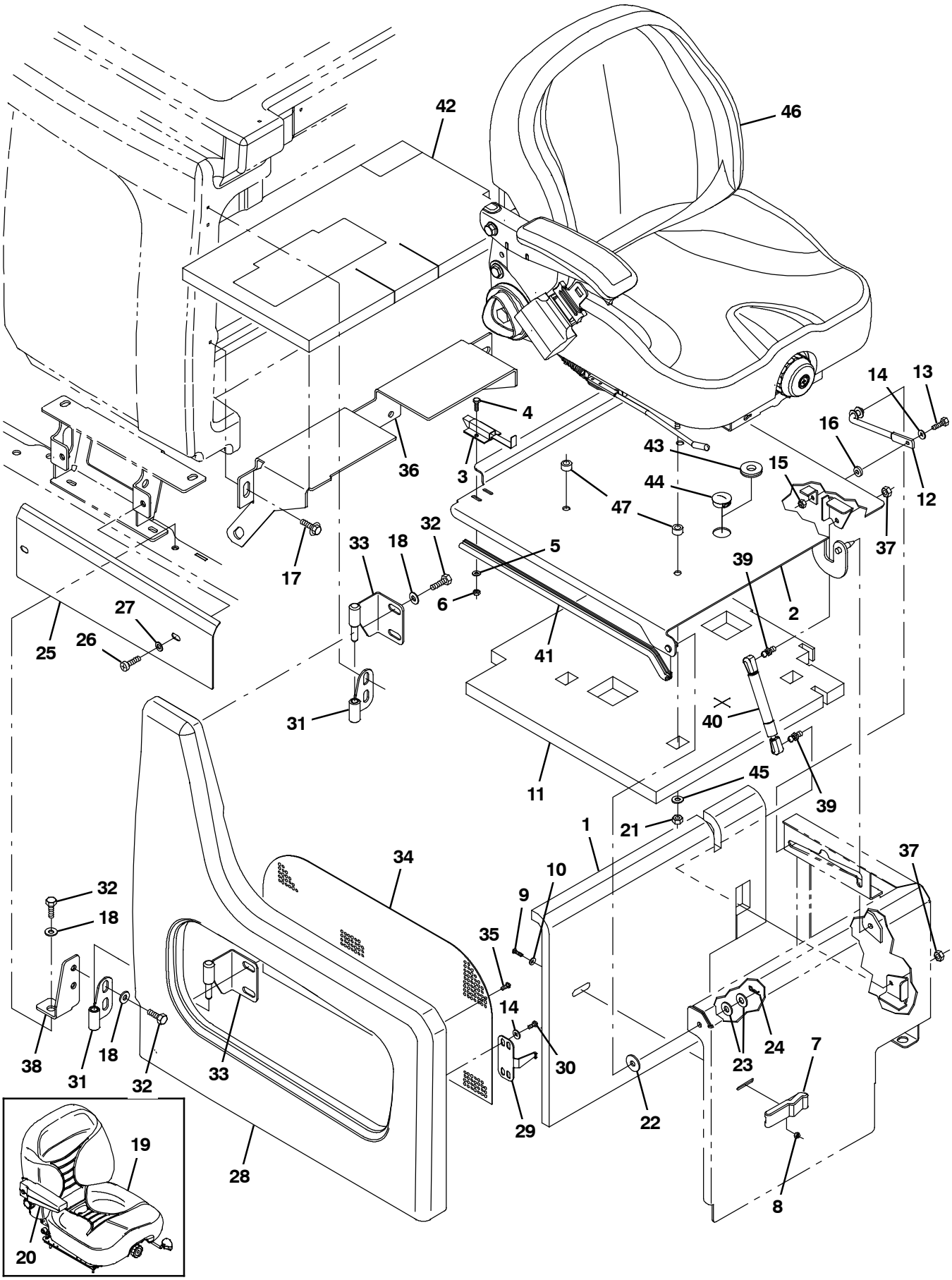

354603

Fig. 7 - Seat Group

	Ref.	Part No.	Serial Number	Description	Qty.
	1	1034767	(000000-)	Insulation, Flame- Retardant, 0.75- 0.88	1
	2	1019228	(000000-)	Plate Wldt, Seat	1
	3	1025736	(000000-)	Latch	1
	4	06933	(000000-)	Screw, Pan, Phl, M5 X 0.80 X 16, 4.8	2
	5	19066	(000000-)	Washer, Flat, 10	2
	6	06549	(000000-)	Nut, Hex, Lock, M5 X 0.80, Nl	2
	7	49800	(000000-)	Latch	1
	8	02850	(000000-)	Nut, Hex, Lock, M4 X 0.70, Nl	4
	9	06928	(000000-)	Screw, Pan, Phl, M4 X 0.70 X 20, 4.8	4
	10	19064	(000000-)	Washer, Flat, 06	2
	11	1023499	(000000-)	Insulation, Flame- Retardant, 1.0	1
	12	223080	(000000-)	Arm Wldt, Safety, Sppt, Seat, .38d 06.5d	1
	13	06944	(000000-)	Screw, Hex, M6 X 1.00 X 25, 8.8	1
	14	32483	(000000-)	Washer, Flat, 0.25, Sae	4
	15	08708	(000000-)	Nut, Hex, Lock, M6 X 1.00, Nl	1
	16	21851	(000000-)	Spacer, Plstc, Nyl	1
	17	1020341	(000000-)	Screw, Hex, M8 X 1.25 X 20, Ss, Sems	3
	18	1017218	(000000-)	Washer, Flat, 0.32b 1.00d .12, Ss	9
▽	19	1022105	(000000- 004257)	Seat, Suspension, W/1 Arm And Belt	1
▲		1066893	(000000- 004257)	Seatbelt, Retractable [Deluxe Seat]	1
▲		1048955	(000000- 004257)	Switch, Seat, No [Delta 6440- 04]	1
▲	20	1072815	(000000- 004257)	Armrest, Rh	1
	21	32983	(000000-)	Nut, Hex, Lock, .31- 18, Nl (NA ONLY)	4
	21	01760	(000000-)	Nut, Hex, Lock, .31- 18, Nl, Thin (CE ONLY)	4
	22	364749	(000000-)	Washer, Flat, 0.41b 1.25d .12, Pye	1
	23	32492	(000000-)	Washer, Flat, 0.38, Std	2
	24	08085	(000000-)	Pin, Cotter, Hair, 0.31d .058 Wir	1
	25	1036220	(000000-)	Cover, Lower, Rh	1
	26	1031665	(000000-)	Screw, Pan, M8 X 1.25 X 25, Blk	2
	27	39349	(000000-)	Washer, Flat, 0.31, Sae	2
	28	1033230	(000000-)	Shroud, Rh	1
	29	1026825	(000000-)	Bracket, Latch, Shrd, Seat	1
	30	09200	(000000-)	Screw, Pan, Phl, M5 X 0.80 X 12, Ss	2
	31	1024464	(000000-)	Hinge Wldt, Shrd, Rh	2
	32	16931	(000000-)	Screw, Hex, M8 X 1.25 X 20, 8.8	8
	33	1024425	(000000-)	Hinge Wldt, Shrd, Rh	2
	34	1036345	(000000-)	Grill, Lh	1
	35	222267	(000000-)	Screw, Pan, Phl, 06- 20 X 0.50, Fmg/Ab	6
	36	1039705	(000000-)	Bracket, Sppt, Seat	1
	37	01760	(001299-)	Nut, Hex, Lock, .31- 18, Nl, Thin	2
	38	1036832	(000000-)	Bracket, Mtg, Hinge, Rh	1
	39	58494	(001299-)	Stud, Ball, .39d .31- 16, Gasspring	2
	40	368391	(001299-)	Gasspring, 180lb, 03.0strk	1
	41	1031206	(001299-)	Seal, Afmkt, Bulb, 90, 0.50D, 02 Ft	1
	42	1047132	(000000-)	Insulation, Acstc, 1.0, 21.8 X 12.5 Adh	1
	43	10632- 8	(001139-)	Grommet, Rbr, 0.75id, F/1.3h, .12 Matl (CE ONLY)	1
	44	76888	(001139-)	Plug, Hole, Rnd, 1.25h .03- .12, Blk Nyl (NA ONLY)	1
	45	32491	(000000-)	Washer, Flat, 0.31, Std	4
	46	1072456	(004258-)	Seat (See Breakdowns)	1
	47	1051052	(004258-)	Spacer, Rnd, .38b .88d .38l (CE ONLY)	4

Fig. 8 - Steering Group

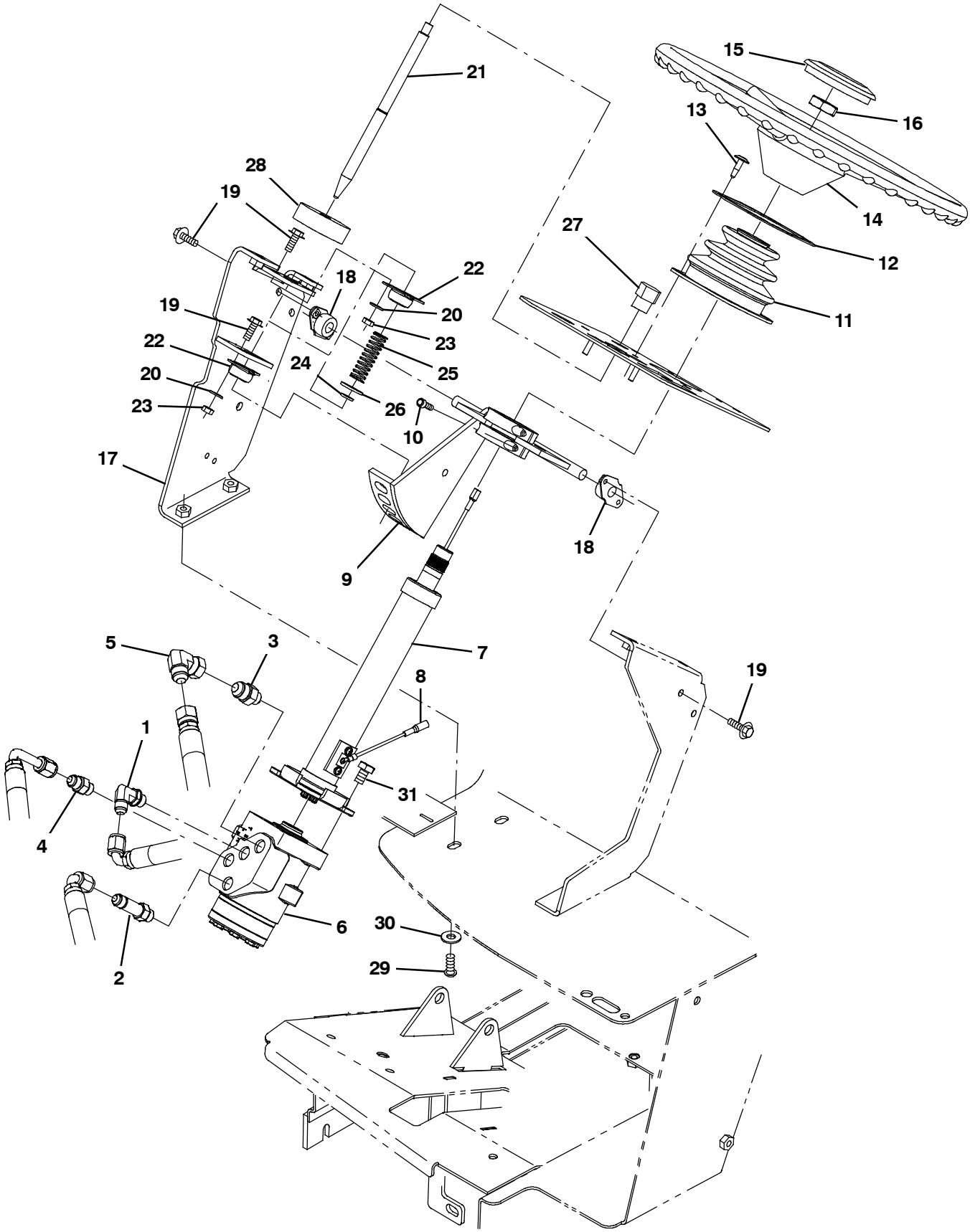

354412

Fig. 8 - Steering Group

	Ref.	Part No.	Serial Number	Description	Qty.
	1	56820	(000000-)	Fitting, Hyd, E90, Jm06/Om06	1
	2	59577	(000000-)	Fitting, Hyd, Str, Jm06/Om06, Long	1
	3	56835	(000000-)	Fitting, Hyd, Str, Jm08/Om06	1
	4	56690	(000000-)	Fitting, Hyd, Str, Jm06/Om06	1
	5	17980	(000000-)	Fitting, Hyd, E90, Jf08/Jm08	1
	6	1024260	(000000-)	Steer- Control, Hyd05, 06.1 2030 (See Breakdowns)	1
▽	7	1021265	(000000-)	Column, Steering, 09.9L 0.86D 36Tooth	1
▲	8	388153	(000000-)	Contact Kit, W/ Brush [En]	4
▽	9	73027	(000000-)	Bracket Wldt, Steering, Tilt	1
▲	10	01681	(000000-)	Screw, Soc, .25- 20 X 0.75, Al	4
	11	70622	(000000-)	Boot, Bellows, 3.1l 4.4w 2.8h 1hole, Neo	1
	12	70623	(000000-)	Retainer, Boot, Steering Column	1
	13	72970	(000000-)	Rivet, Plstc, .250d X 0.90	4
	14	1058996	(000000-)	Wheel, Steering, 14.3d 0.81b 36tooth	1
	15	1024478	(000000-)	Button, Cntrl, Horn	1
	16	56185	(000000-)	Nut, Hex, Jam, M20 X 1.5	1
	17	1024695	(000000-)	Bracket Wldt, Tilt, Rh	1
	18	70709	(000000-)	Bearing, Flng, 2hole, 0.50b	2
	19	1040467	(000000-)	Screw, Hex, M6 X 1.0 X 20, 9.8, Sems	8
	20	32483	(000000-)	Washer, Flat, 0.25, Sae	4
	21	1023926	(000000-)	Pin, Locking, Steering, Tilt	1
	22	47585	(000000-)	Bearing, Flng, 2hole, 0.50b [Nyl]	2
	23	08708	(000000-)	Nut, Hex, Lock, M6 X 1.00, Nl	4
	24	70717	(000000-)	Ring, Retaining, Ext, 0.50d, Hd	1
	25	22290	(000000-)	Spring, Cmpr, 0.72od .06wir 02.3l	1
	26	32486	(000000-)	Washer, Flat, 0.50, Sae	1
	27	04706	(000000-)	Knob, Tee, 2.5 X 1.0 1.1l 0.38- 16, Plstc	1
	28	75968	(000000-)	Insulation, Acstc, Rnd, 0.8, 02.5d 0.5h	1
	29	1031665	(000000-)	Screw, Pan, M8 X 1.25 X 25, Blk	2
	30	32491	(000000-)	Washer, Flat, 0.31, Std	2
	31	06960	(000000-)	Screw, Hex, M10 X 1.5 X 16, 8.8	4

Fig. 9 - Front Cover Group

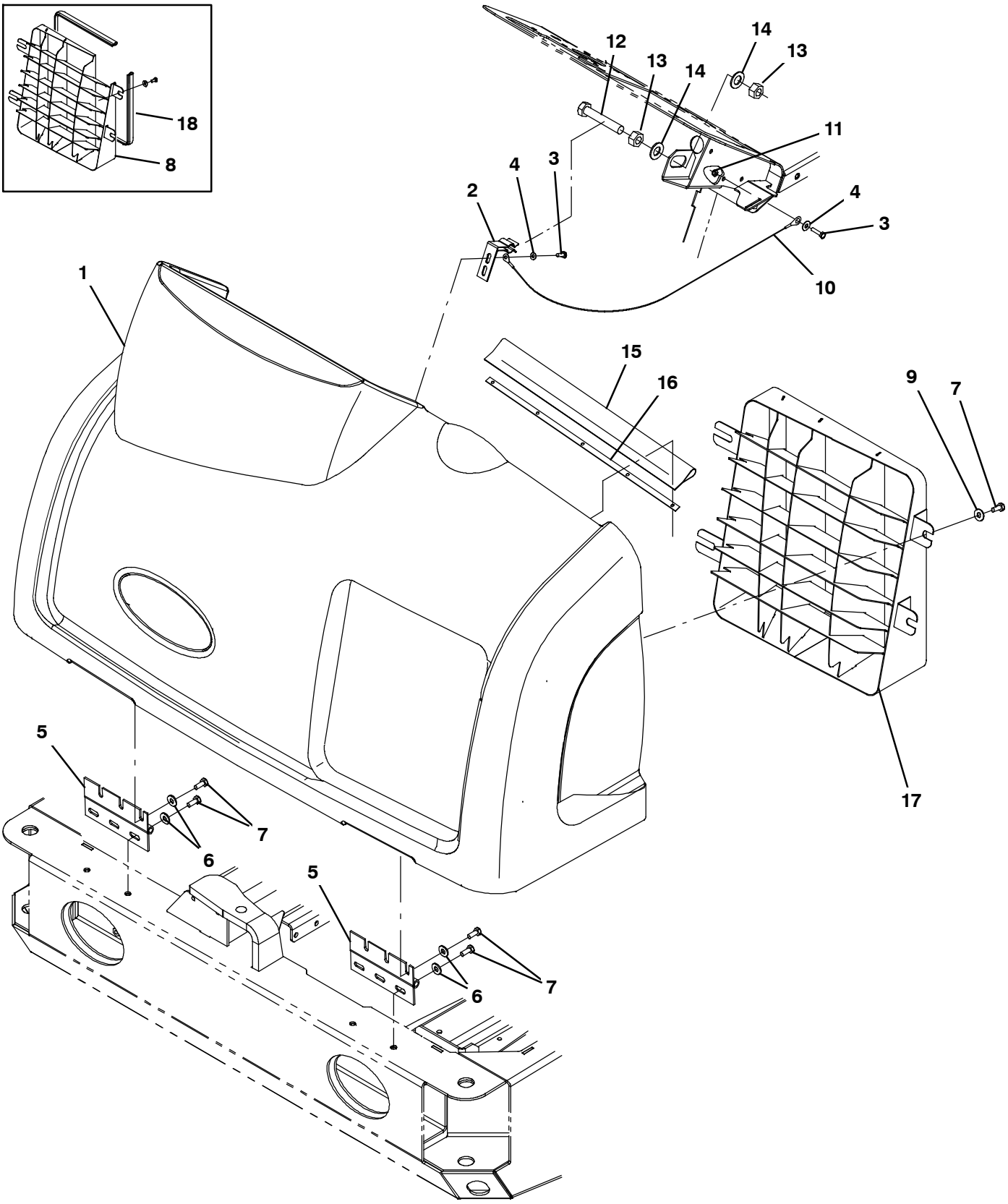

354604

Fig. 9 - Front Cover Group

Ref.	Part No.	Serial Number	Description	Qty.
1	1034844	(000000-)	Shroud, Front	1
2	1008916	(000000-)	Bracket Wldt, Latch	1
3	06942	(000000-)	Screw, Hex, M6 X 1.00 X 16, 8.8	3
4	32490	(000000-)	Washer, Flat, 0.25, Std	2
5	71941	(000000-)	Hinge, .38pin .12 3.5w 06.5l, 6/0.38sl	2
6	32491	(000000-)	Washer, Flat, 0.31, Std	8
7	16931	(000000-)	Screw, Hex, M8 X 1.25 X 20, 8.8	12
8	1037717	(000000- 001249)	Grill Wldt, Front	1
9	1017218	(000000-)	Washer, Flat, 0.32b 1.00d .12, Ss	4
10	74352	(000000-)	Cable, Glv .09d 042.0l .38eye /.38eye	1
11	08708	(000000-)	Nut, Hex, Lock, M6 X 1.00, Nl	1
12	06988	(000000-)	Screw, Hex, M16 X 2.00 X 90, 8.8	1
13	07782	(000000-)	Nut, Hex, Std, M16 X 2.00	2
14	15331	(000000-)	Washer, Flat, 0.62, Sae	2
15	1046245	(000000-)	Seal, Shroud, Front	1
16	1037971	(000000-)	Strip, Mtg, Seal	1
17	1046090	(001250-)	Grill Wldt, Front	1
18	1031557	(000000- 001249)	Seal, Afmkt, Bulb, Str, 1.0D F/11Ga 08Ft	1

Fig. 10 - Engine Cover Group

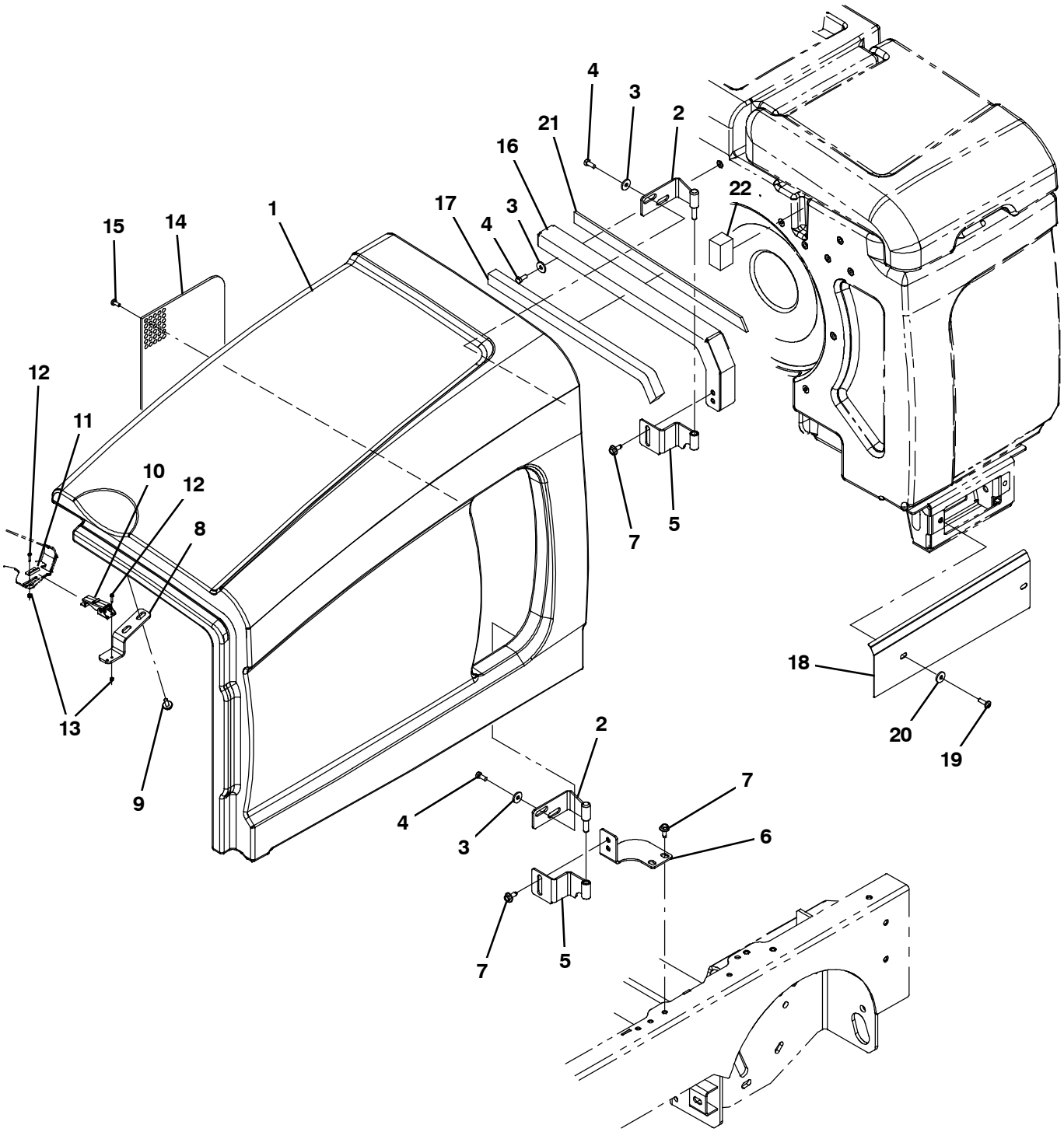

354605

Fig. 10 - Engine Cover Group

Ref.	Part No.	Serial Number	Description	Qty.
1	1033912	(000000-)	Shroud, Eng	1
2	1036249	(000000-)	Hinge Wldt, Lh, Pin	2
3	1017218	(000000-)	Washer, Flat, 0.32b 1.00d .12, Ss	6
4	16931	(000000-)	Screw, Hex, M8 X 1.25 X 20, 8.8	6
5	1036227	(000000-)	Hinge Wldt, Lh, Tube	2
6	1040222	(000000-)	Bracket, Mtg, Hinge, Lh	1
7	1037346	(000000-)	Screw, Hex, M8 X 1.25 X 25, 9.8, Sems	6
8	1020186	(000000-)	Bracket, Latch, Cover	1
9	1020341	(000000-)	Screw, Hex, M8 X 1.25 X 20, Ss, Sems	2
10	384418	(000000-)	Latch, Door [Southco 91- 562- 07]	1
11	384419	(000000-)	Bracket, Latch, Keeper	1
12	24265	(000000-)	Screw, Pan, Phl, M4 X 0.70 X 16, Ss	4
13	33932	(000000-)	Nut, Hex, Lock, M4 X 0.70, Nl, Ss	4
14	1036345	(000000-)	Grill, Lh	1
15	222267	(000000-)	Screw, Pan, Phl, 06- 20 X 0.50, Fmg/Ab	6
16	1040187	(000000-)	Channel, Mtg, Seal, Shrd, Lh	1
17	1047191	(000000-)	Channel, Mtg, Seal, Shrd, Lh	1
18	1037340	(000000-)	Cover, Lower, Lh	1
19	1031665	(000000-)	Screw, Pan, M8 X 1.25 X 25, Blk	2
20	39349	(000000-)	Washer, Flat, 0.31, Sae	2
21	1047295	(000000-)	Seal, Foam, 0.50	1
22	1047192	(000000-)	Seal, Foam, 1.18	1

Fig. 11 - GM Engine and Mount Group (000000-003999)

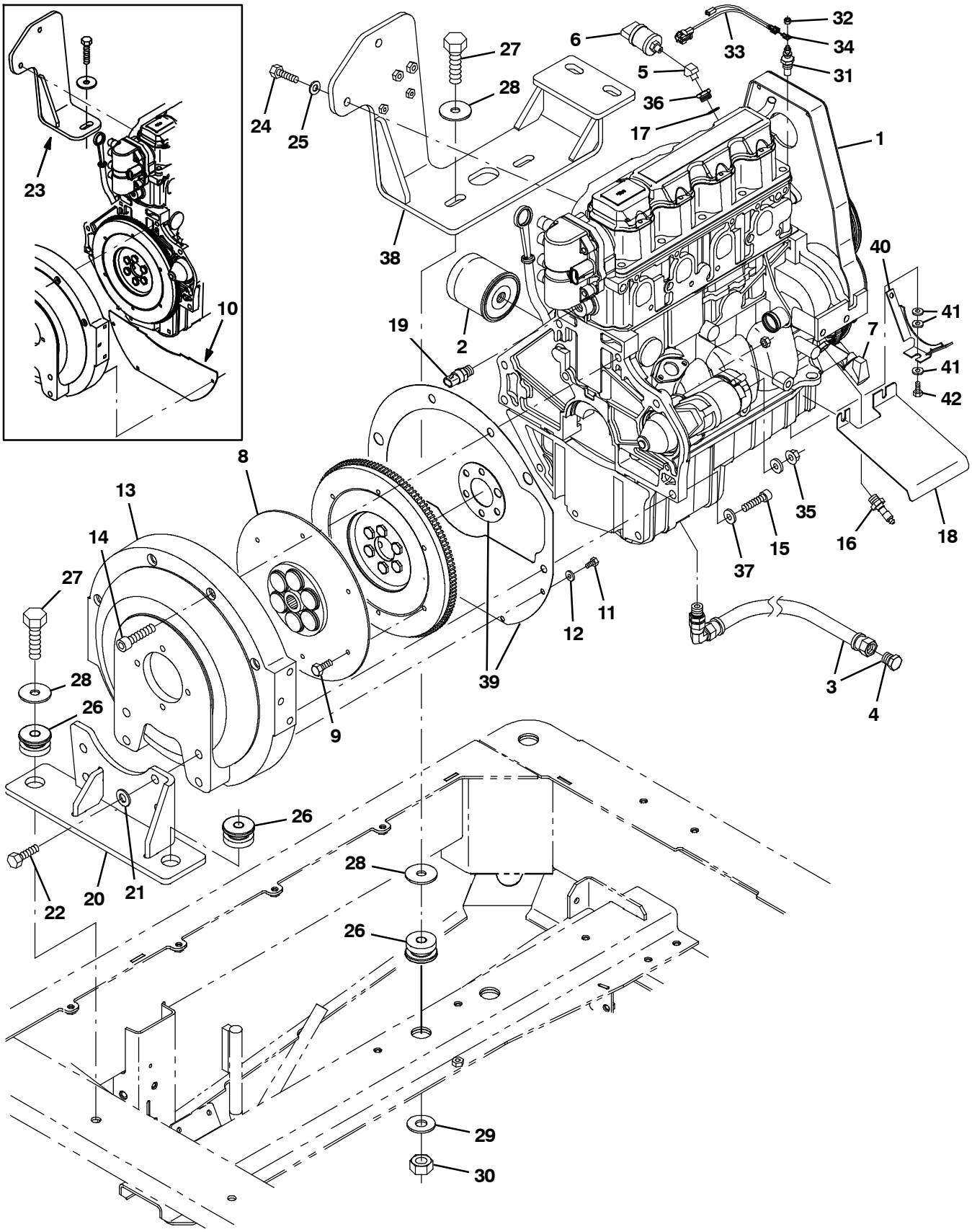

354631

Fig. 11 - GM Engine and Mount Group (000000-003999)

	Ref.	Part No.	Serial Number	Description	Qty.
▽	1	372862	(000000-003999)	Engine, Block, Long [Gm1.6l] (See Engine Breakdown)	1
▲	2	371972	(000000-003999)	Element, Fltr, Oil, Eng, Spin-On	1
▽	3	9006634	(000000-003999)	Hose, Drain, Engine Oil	1
▲	4	9006635	(000000-003999)	Fitting, Plug	1
	5	24976	(000000-003999)	Fitting, Brs, E45, Pf02/Pm02	1
	6	1055106	(000000-003999)	Switch, Press, 0006psi Dpdt	1
	7	372002	(000000-003999)	Sensor, Position, Cshft	1
	8	371866	(000000-003999)	Coupling, Drive, 13t	1
	9	9008395	(000000-003999)	Screw, Hex, M07-1.00 X 20.0, 8.8	6
	10	371868	(000000-001320)	Plate Kit, Repair (Replaced by 9006895)	1
	11	19315	(000000-003999)	Screw, Hex, .25-20 X 0.50, G5	4
	12	32490	(000000-003999)	Washer, Flat, 0.25, Std	4
	13	371869	(000000-003999)	Housing, Pump	1
	14	371870	(000000-003999)	Screw, Soc, M12 X 1.75 X 55, 10.9	4
	15	10832	(000000-003999)	Screw, Soc, .38-16 X 1.50, Al	2
	16	371996	(000000-001320)	Switch, Indicator, Oil Press	1
	16	9008197	(001321-003999)	Switch, Indicator, Oil Press [2010]	1
	17	385029	(000000-003999)	Gasket, Plug, Relief Valve,Oil Press	1
	18	372556	(000000-003999)	Shield, Starter [1.6l]	1
	19	372953	(000000-003999)	Sensor, Temp, Coolant	1
	20	1023288	(000000-003999)	Bracket Wldt, Mtg, Eng, Back, Gas/Lpg	1
	21	39810	(000000-003999)	Screw, Hex, .50-13 X 1.25, G5	4
	22	32486	(000000-003999)	Washer, Flat, 0.50, Sae	4
	23	1043187	(000000-001249)	Bracket Wldt, Mtg, Eng	1
	24	39283	(000000-003999)	Screw, Hex, M10 X 1.50 X 25, 8.8	2
	25	32485	(000000-003999)	Washer, Flat, 0.38, Sae	2
	26	51176	(000000-003999)	Isolator, Vib, .50d	4
	27	06972	(000000-003999)	Screw, Hex, M12 X 1.75 X 60, 8.8	4
	28	04414	(000000-003999)	Washer, Flat, 0.53b 1.88d .12, Stl, Pl	6
	29	32493	(000000-003999)	Washer, Flat, 0.50, Std	2
	30	08711	(000000-003999)	Nut, Hex, Lock, M12 X 1.75, Nl	2
	31	1042028	(000000-003999)	Sensor, Temp, Water [Rework For 1.6gm]	1
	32	50335	(000000-003999)	Nut, Hex, Std, M5 X 0.80, 8	1
	33	1038203	(000000-003999)	Harness, Temp, Eng, Switch [M30]	1
	34	68106	(000000-003999)	Terminal, Tab, .25 .19h .84l	1
	35	41361	(000000-003999)	Nut, Hex, Std, M8 X 1.25, Brs	1
	36	1031439	(000000-003999)	Fitting, Pipe, Bshg, M18 X 1.5	1
	37	371877	(000000-003999)	Washer, Flat, 0.38, Hardened	2
	38	1046022	(001250-003999)	Bracket Wldt, Mtg, Eng	1
	39	9006895	(001321-003999)	Plate, Kit, Repair	1
	40	1056566	(001283-003999)	Plate, Guard, Belt [Gm 1.6l]	1
	41	32490	(001283-003999)	Washer, Flat, 0.25, Std	3
	42	06943	(001283-003999)	Screw, Hex, M6 X 1.00 X 20, 8.8	1

Fig. 12 - GM Engine EFI Group, Gasoline (000000-001320)

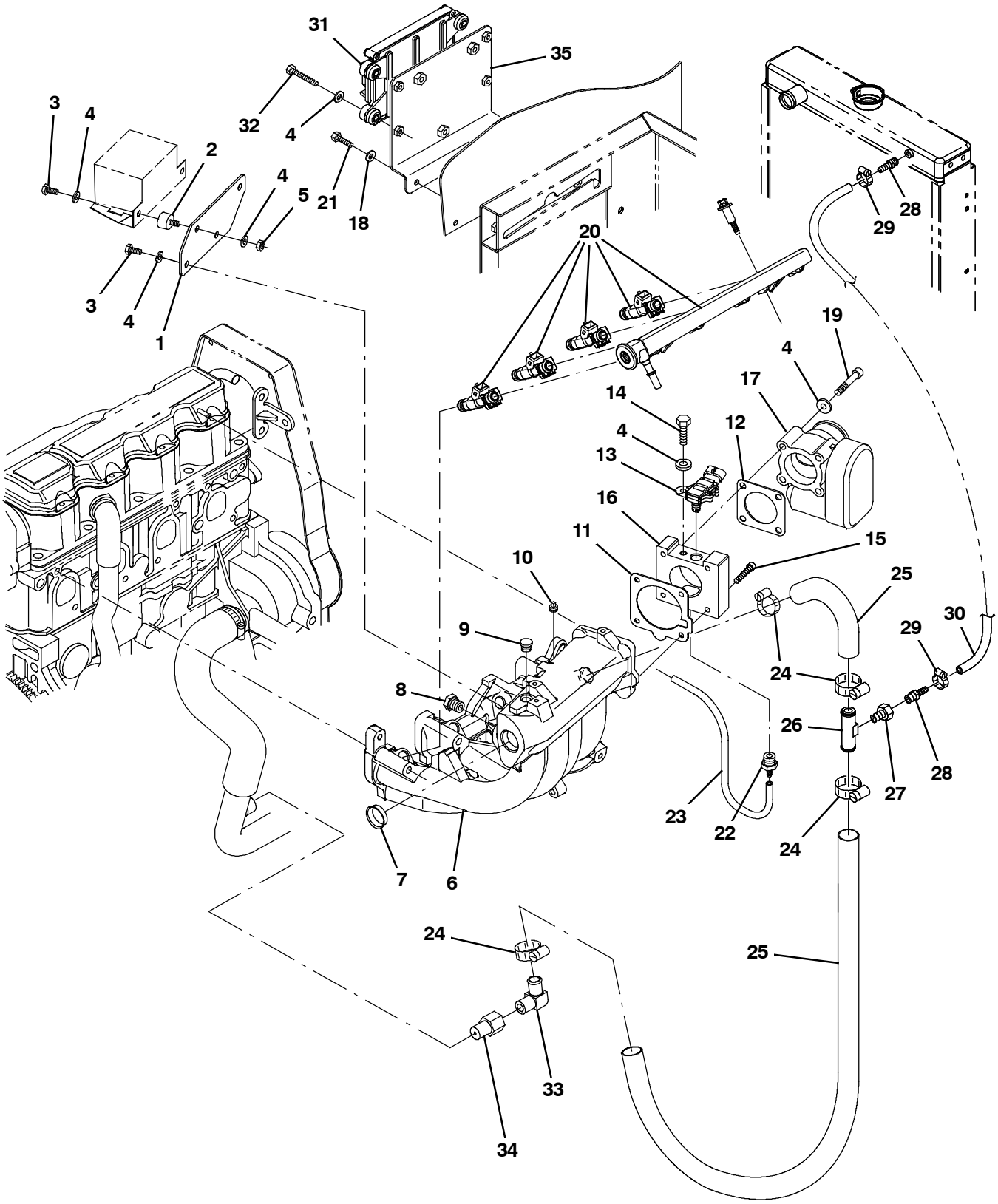

354632

Fig. 12 - GM Engine EFI Group, Gasoline (000000-001320)

	Ref.	Part No.	Serial Number	Description	Qty.
	1	1031312	(000000-001320)	Plate, Mtg, Relay	1
	2	372470	(000000-001320)	Isolator, Box, Relay	2
	3	19315	(000000-001320)	Screw, Hex, .25-20 X 0.50, G5	4
	4	32490	(000000-001320)	Washer, Flat, 0.25, Std	13
	5	19312	(000000-001320)	Nut, Hex, Std, .25-20	2
	6	372547	(000000-001320)	Manifold, Intake [1.6l]	1
	7	372549	(000000-001320)	Plug, Manifold, Intake	1
	8	384995	(000000-001320)	Fitting, Plug, M16, Intake Manifold	1
	9	372550	(000000-001320)	Plug, Port, Sensor [Map]	1
	10	372548	(000000-001320)	Plug, .12npt, Ss	1
▽		9003390	(000000-001320)	Gasket Kit, Repair, Gas [Gm1.6l 2007]	1
▲	11	372544	(000000-001320)	Gasket, Manifold, Intake	1
▲	12	372545	(000000-001320)	Gasket, Body, Throttle [1.6l]	1
	13	372493	(000000-001320)	Sensor [T Map]	1
	14	19317	(000000-001320)	Screw, Hex, .25-20 X 0.75, G5	1
	15	06532	(000000-001320)	Screw, Soc, M6 X 1.00 X 25, 12.9	4
	16	372534	(000000-001320)	Adapter, Intake, Throttle Body	1
	17	384974	(000000-001320)	Housing, Throttle, 40mm [Bosch]	1
	18	32483	(000000-001320)	Washer, Flat, 0.25, Sae	2
	19	07255	(000000-001320)	Screw, Soc, M6 X 1.00 X 45, 12.9	4
	20	384992	(000000-001320)	Rail, Injector, Fuel, Plstc	1
	21	06942	(000000-001320)	Screw, Hex, M6 X 1.00 X 16, 8.8	2
	22	372543	(000000-001320)	Fitting, Vacuum [M16-15-6h]	1
	23	384972	(000000-001320)	Hose, Vacuum, 0.22id X 15.0l	1
	24	63810	(000000-001320)	Clamp, Hose, Wormdrive, 0.56-1.06d, .56w	4
	25	1022364	(000000-001320)	Hose, Heater	1
	26	83578	(000000-001320)	Tube, Bleed, Air, .62od 2.2l .12npt, Alm	1
	27	1015930	(000000-001320)	Fitting, Brs, Str, Pf04/Pm02	1
	28	150516	(000000-001320)	Fitting, Brs, Str, Bm06/Pm05	2
	29	54333	(000000-001320)	Clamp, Hose, Wormdrive, 0.31-0.88d, .31w	2
	30	1043481	(000000-001320)	Hose, Heater, 0.38id	1
	31	1040405	(000000-001320)	Module, Ecu, Gas [Gm1.6l 2700 Rpm]	1
	32	06946	(000000-001320)	Screw, Hex, M6 X 1.00 X 35, 8.8	4
	33	51839	(000000-001320)	Fitting, Brs, E90, Em10/Pm06	1
	34	1015547	(000000-001320)	Fitting, Adapter, Orifice, Pf06/Pm06	1
	35	1029082	(000000-001320)	Bracket, Mtg, Ecu [M20/T20 2007]	1

Fig. 13 - GM Engine EFI Group, Gasoline (001321-003999)

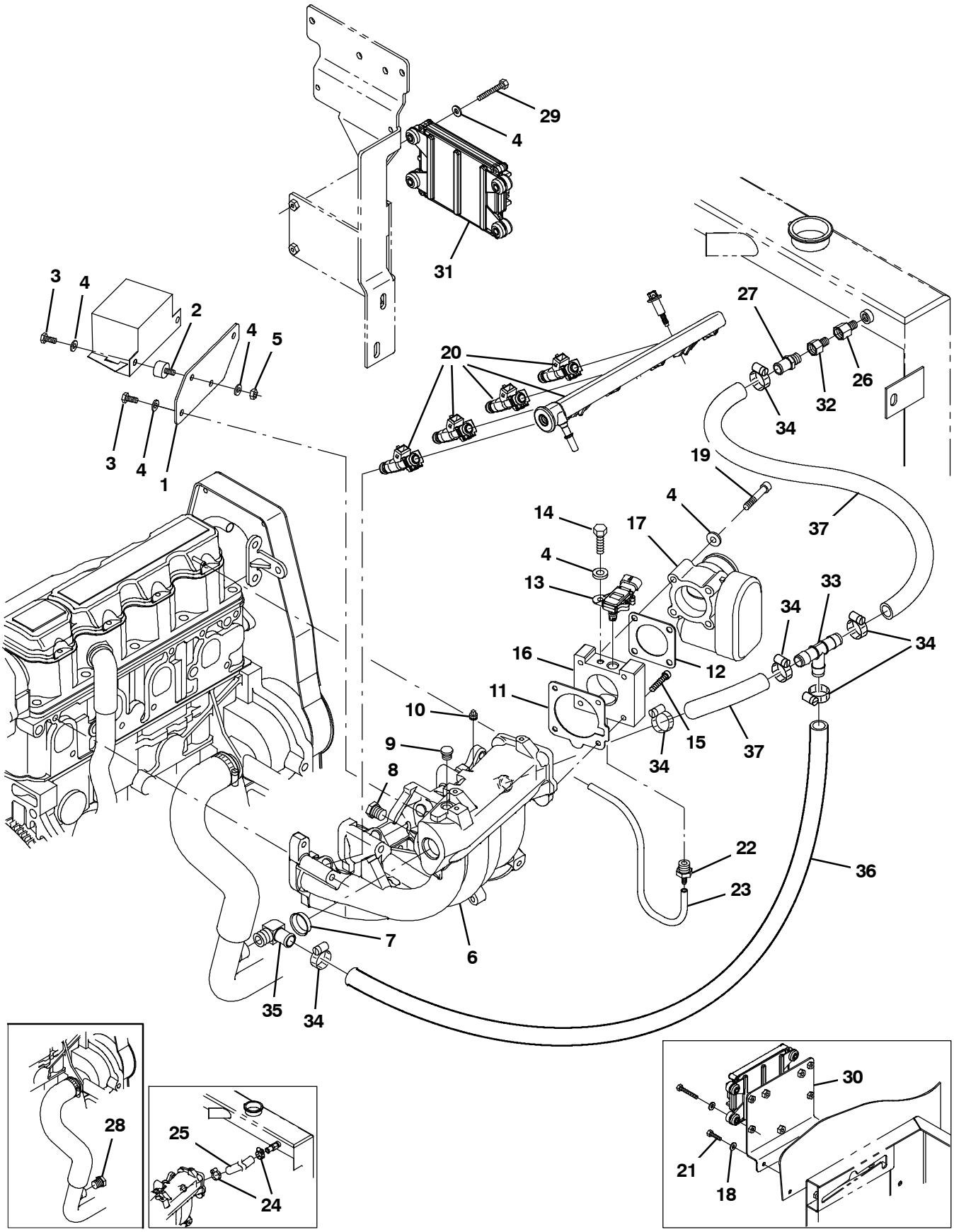

354416

Fig. 13 - GM Engine EFI Group, Gasoline (001321-003999)

	Ref.	Part No.	Serial Number	Description	Qty.
	1	1031312	(001321-003999)	Plate, Mtg, Relay	1
	2	372470	(001321-003999)	Isolator, Box, Relay	2
	3	19315	(001321-003999)	Screw, Hex, .25-20 X 0.50, G5	4
	4	32490	(001321-003999)	Washer, Flat, 0.25, Std	13
	5	19312	(001321-003999)	Nut, Hex, Std, .25-20	2
	6	372547	(001321-003999)	Manifold, Intake [1.6l]	1
	7	372549	(001321-003999)	Plug, Manifold, Intake	1
	8	384995	(001321-003999)	Fitting, Plug, M16, Intake Manifold	1
	9	372550	(001321-003999)	Plug, Port, Sensor [Map]	1
	10	372548	(001321-003999)	Plug, .12npt, Ss	1
▽		9003390	(001321-003999)	Gasket Kit, Repair, Gas [Gm1.6l 2007]	1
▲	11	372544	(001321-003999)	Gasket, Manifold, Intake	1
▲	12	372545	(001321-003999)	Gasket, Body, Throttle [1.6l]	1
	13	372493	(001321-003999)	Sensor [T Map]	1
	14	19317	(001321-003999)	Screw, Hex, .25-20 X 0.75, G5	1
	15	06532	(001321-003999)	Screw, Soc, M6 X 1.00 X 25, 12.9	4
	16	9006619	(001321-003999)	Adapter	1
	17	384974	(001321-003999)	Housing, Throttle, 40mm [Bosch]	1
	18	32483	(001321-001361)	Washer, Flat, 0.25, Sae	2
	19	07255	(001321-003999)	Screw, Soc, M6 X 1.00 X 45, 12.9	4
	20	384992	(001321-003999)	Rail, Injector, Fuel, Plstc	1
	21	06942	(001321-001361)	Screw, Hex, M6 X 1.00 X 16, 8.8	2
	22	372543	(001321-003999)	Fitting, Vacuum [M16-15-6h]	1
	23	384972	(001321-003999)	Hose, Vacuum, 0.22id X 15.0l	1
	24	63810	(001321-001424)	Clamp, Hose, Wormdrive, 0.56-1.06d, .56w	2
	25	61869	(001321-001424)	Hose, Heater, 0.62id, 024.0l	1
	26	1042772	(001321-003999)	Fitting, Brs, Str, Pf06/Pm04	1
	27	27767	(001321-003999)	Fitting, Brs, Str, Em10/Pm06	1
	28	762282	(001321-001424)	Fitting, Hyd, Plug, Pm06	1
	29	06946	(001321-003999)	Screw, Hex, M6 X 1.00 X 35, 8.8	4
	30	1029082	(001321-001361)	Bracket, Mtg, Ecu [M20/T20 2007]	1
	31	1056420	(001321-003999)	Module, Ecu,Gas[GM1.6L 2010 2700RPM]	1
	32	1015547	(001321-003999)	Fitting, Adapter, Orifice, Pf06/Pm06	1
	33	1062116	(001425-003999)	Fitting, Plstc, Tee, Bm10/Bm10/Bm10	1
	34	63810	(001425-003999)	Clamp, Hose, Wormdrive, 0.56-1.06d, .56w	7
	35	51839	(001425-003999)	Fitting, Brs, E90, Em10/Pm06	1
	36	1016560	(001425-003999)	Hose, Afmkt, Rbr, Heater, 0.62id, 02ft	1
	37	1015897	(003269-003999)	Hose, Radiator, Mold, .75Id X .62Id (Cut in two)	1

Fig. 14 - GM Engine EFI Group, LPG (000000-003999)

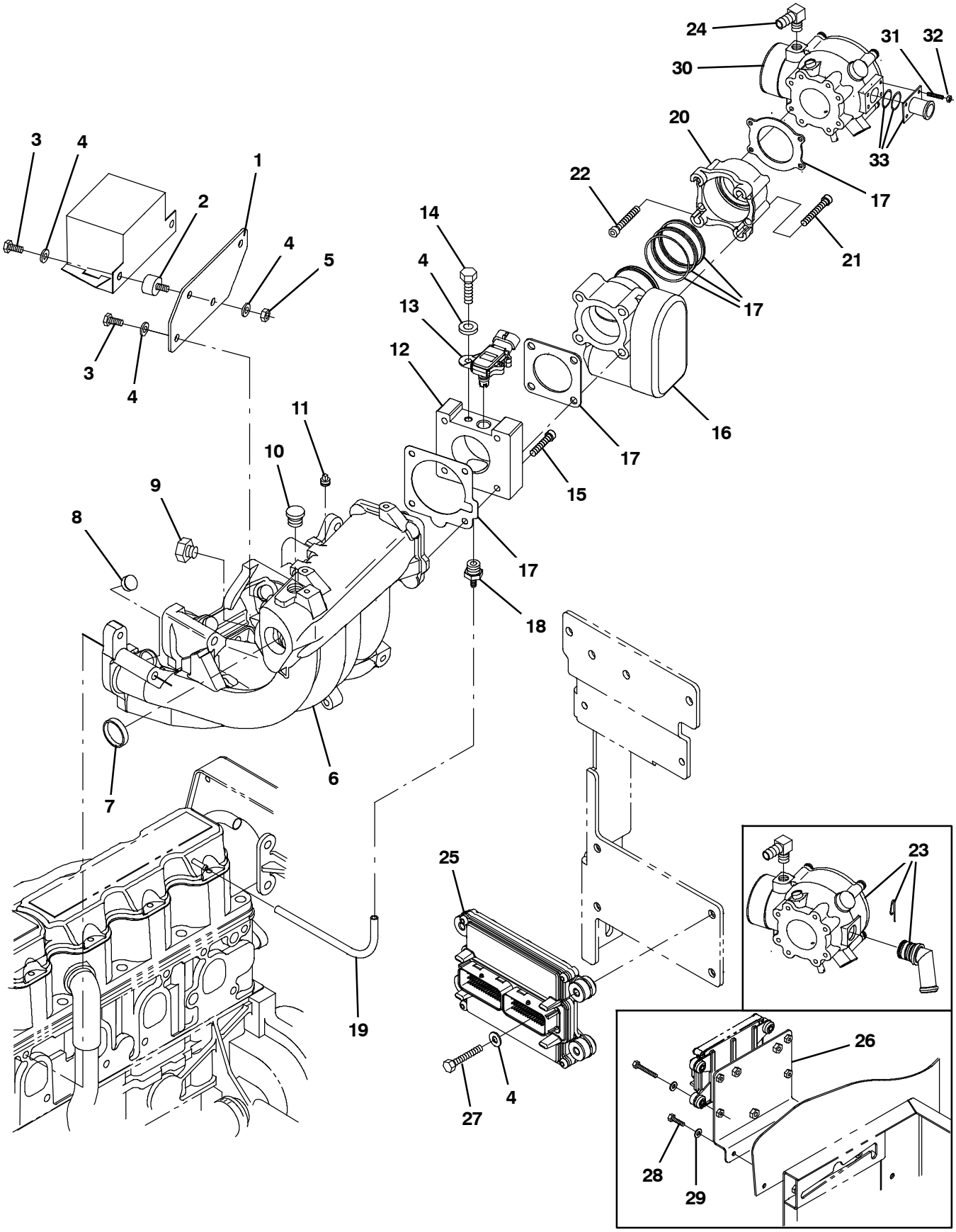

354633

Fig. 14 - GM Engine EFI Group, LPG (000000-003999)

	Ref.	Part No.	Serial Number	Description	Qty.
	1	1031312	(000000-003999)	Plate, Mtg, Relay	1
	2	372470	(000000-003999)	Isolator, Box, Relay	2
	3	19315	(000000-003999)	Screw, Hex, .25-20 X 0.50, G5	4
	4	32490	(000000-003999)	Washer, Flat, 0.25, Std	9
	5	19312	(000000-003999)	Nut, Hex, Std, .25-20	2
	6	372547	(000000-003999)	Manifold, Intake [1.6l]	1
	7	372549	(000000-003999)	Plug, Manifold, Intake	1
	8	372579	(000000-003999)	Plug, Hole, Injector	4
	9	384995	(000000-003999)	Fitting, Plug, M16, Intake Manifold	1
	10	372550	(000000-003999)	Plug, Port, Sensor [Map]	1
	11	372548	(000000-003999)	Plug, .12npt, Ss	1
	12	372534	(000000-001320)	Adapter, Intake, Throttle Body	1
	12	9006619	(001321-003999)	Adapter	1
	13	372493	(000000-003999)	Sensor [T Map]	1
	14	19317	(000000-003999)	Screw, Hex, .25-20 X 0.75, G5	1
	15	06532	(000000-003999)	Screw, Soc, M6 X 1.00 X 25, 12.9	4
	16	384974	(000000-003999)	Housing, Throttle, 40mm [Bosch]	1
	17	9003391	(000000-003999)	Gasket Kit, Repair, Lpg [Gm1.6l 2007]	1
	18	372543	(000000-003999)	Fitting, Vacuum [M16-15-6h]	1
	19	384972	(000000-003999)	Hose, Vacuum, 0.22id X 15.0l	1
	20	384996	(000000-003999)	Adapter, Valve, 400mm [Bosch]	1
	21	09037	(000000-003999)	Screw, Soc, M8 X 1.25 X 70, 12.9	4
	22	384991	(000000-003999)	Bolt, Soc Head, M5 X 80 X 35	4
	23	384980	(000000-001320)	Mixer, W/70deg Ftg	1
	24	372510	(000000-003999)	Fitting, E90	1
	25	1040406	(000000-001320)	Module, Ecu, Lpg [GM1.6L 2700 RPM]	1
	25	1056233	(001321-003999)	Module, Ecu,Lpg[GM1.6L 2010]	1
	26	1029082	(000000-001361)	Bracket, Mtg, Ecu	1
	27	06946	(000000-003999)	Screw, Hex, M6 X 1.00 X 35, 8.8	4
	28	06942	(000000-001361)	Screw, Hex, M6 X 1.00 X 16, 8.8	2
	29	32483	(000000-001361)	Washer, Flat, 0.25, Sae	2
▽	30	9006618	(001321-003999)	Mixer , Lpg	1
▲		9010634	(003123-003999)	Repair Kit, Mixer	1
	31	9007424	(001321-003999)	Stud, M05-0.8	4
	32	9007423	(001321-003999)	Nut, Flng, M05-0.8	4
	33	1055170	(001321-003999)	Fitting, Fuel [Mixer E100Lp 2010]	1

Fig. 15 - GM Engine Vaporizer Group, LPG (000000-001320)

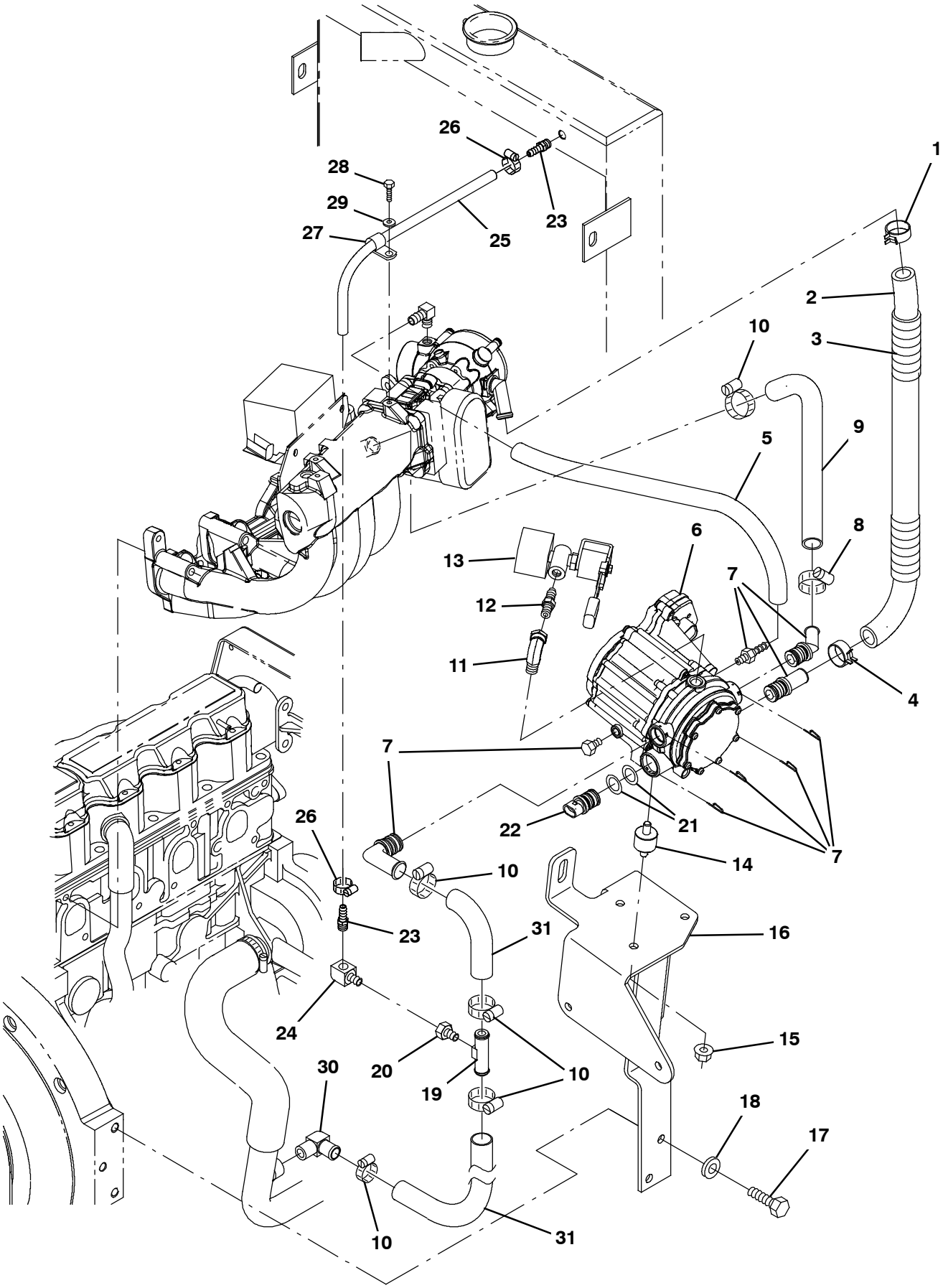

354639

Fig. 15 - GM Engine Vaporizer Group, LPG (000000-001320)

	Ref.	Part No.	Serial Number	Description	Qty.
	1	384970	(000000-001320)	Clamp, Hose, Spring, 0.75d	1
	2	384983	(000000-001320)	Hose [Mixer To Epr]	1
	3	384971	(000000-001320)	Cover, Hose	1
	4	384979	(000000-001320)	Clamp, Hose, Spring, 0.62d	1
	5	384973	(000000-001320)	Hose, Supply, Gas, .25id	1
	6	384977	(000000-001320)	Regulator [Ep]	1
	7	384978	(000000-001320)	Fitting Kit [Epr]	1
	8	372539	(000000-001320)	Clamp, Hose, 1.0	1
	9	384984	(000000-001320)	Hose [Epr To Manifold]	1
	10	63810	(000000-001320)	Clamp, Hose, Wormdrive, 0.56-1.06d, .56w	5
	11	11442-1	(000000-001320)	Fitting, Hyd, E90, Spcl	1
	12	372529	(000000-001320)	Fitting, Nipple, .25mal	1
▽	13	384975	(000000-001320)	Valve, Lock Off	1
▲		372615	(000000-001320)	Filter Kit, Fuelock, Lpg	1
	14	384986	(000000-001320)	Isolator [Epr]	3
	15	07791	(000000-001320)	Nut, Hex, Flng, M8 X 1.25	3
	16	1028343	(000000-001320)	Bracket Wldt, Mtg, Regulator, Lpg	1
	17	371770	(000000-001320)	Screw	2
	18	371877	(000000-001320)	Washer, Flat, 0.38, Hardened	2
	19	83578	(000000-001320)	Tube, Bleed, Air, .62od 2.2l .12npt, Alm	1
	20	1015930	(000000-001320)	Fitting, Brs, Str, Pf04/Pm02	1
	21	1041151	(000000-001320)	Seal, Org, Sensor, Temp [Epr]	2
	22	1041152	(000000-001320)	Sensor, Temp [Epr]	1
	23	150516	(000000-001320)	Fitting, Brs, Str, Bm06/Pm05	2
	24	27048	(000000-001320)	Fitting, Brs, E90, Pf04/Pm04	1
	25	1043481	(000000-001320)	Hose, Heater, 0.38id	1
	26	54333	(000000-001320)	Clamp, Hose, Wormdrive, 0.31-0.88d, .31w	2
	27	67767	(000000-001320)	Clamp, Cable, Stl, 0.69d X 0.62w, 1hole	1
	28	06942	(000000-001320)	Screw, Hex, M6 X 1.00 X 16, 8.8	1
	29	32490	(000000-001320)	Washer, Flat, 0.25, Std	1
	30	51839	(000000-001320)	Fitting, Brs, E90, Em10/Pm06	1
	31	372528	(000000-001320)	Hose, Mold, .62 To .75 (Cut in 2)	1

Fig. 16 - GM Engine Vaporizer Group, LPG (001321-003999)

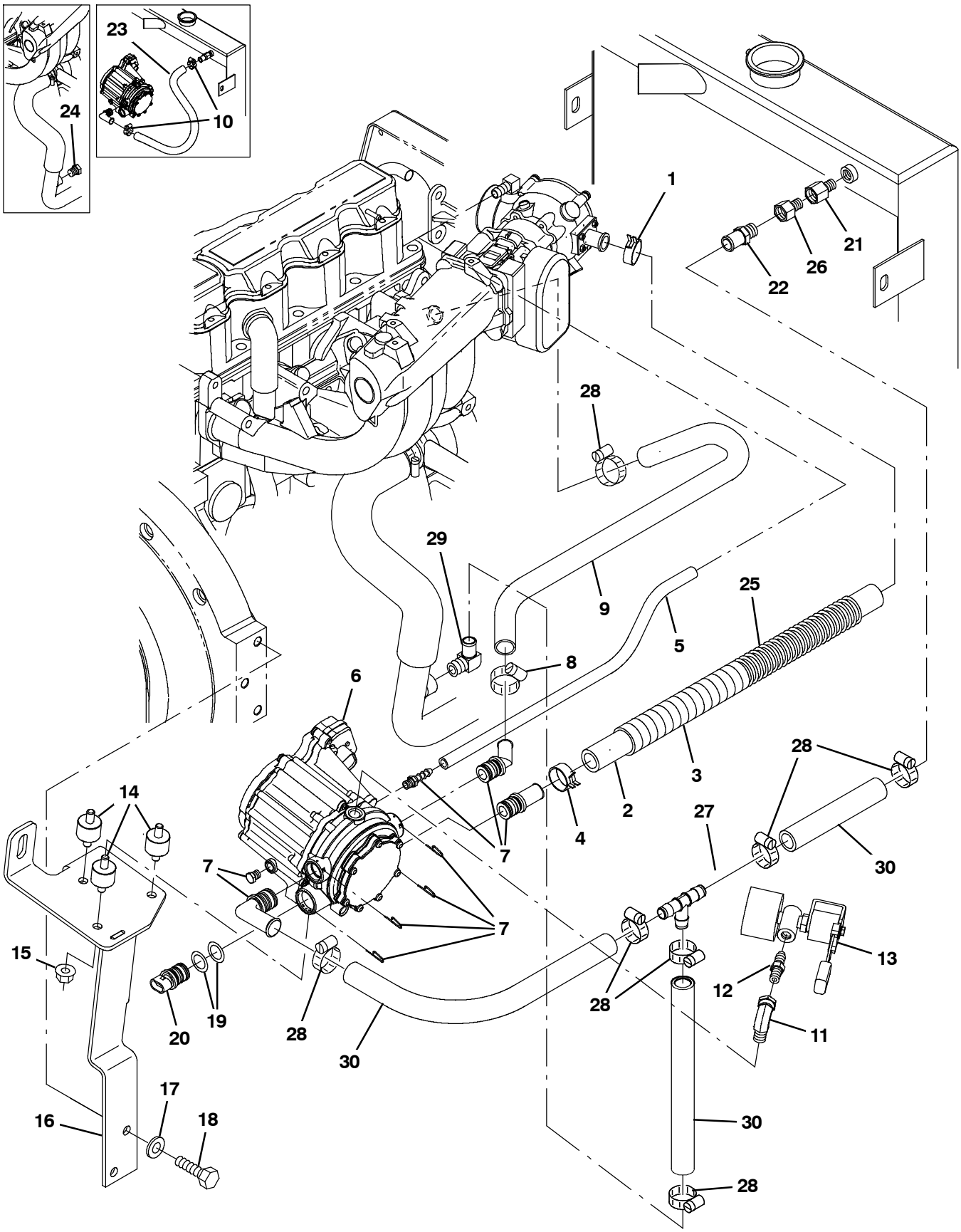

354639

Fig. 16 - GM Engine Vaporizer Group, LPG (001321-003999)

	Ref.	Part No.	Serial Number	Description	Qty.
	1	384970	(001321-003999)	Clamp, Hose, Spring, 0.75d	1
	2	9007552	(001321-003999)	Hose, Fuel [Mixer To Epr, 22.5”L]	1
	3	384971	(001321-003999)	Cover, Hose	1
	4	384979	(001321-003999)	Clamp, Hose, Spring, 0.62d	1
	5	384973	(001321-003999)	Hose, Supply, Gas, .25id	1
	6	384977	(001321-003999)	Regulator [Ep]	1
	7	384978	(001321-003999)	Fitting Kit [Epr]	1
	8	372539	(001321-003999)	Clamp, Hose, 1.0	1
	9	384984	(001321-003999)	Hose [Epr To Manifold]	1
	10	63810	(001321-001424)	Clamp, Hose, Wormdrive, 0.56-1.06d, .56w	3
	11	11442-1	(001321-003999)	Fitting, Hyd, E90, Spcl	1
	12	372529	(001321-003999)	Fitting, Nipple, .25mal	1
▽	13	9006620	(001321-003999)	Valve, Lock Off [Gm 1.6L 2010]	1
▲		9007380	(001321-003999)	Filter Kit, Fuelock, Lpg	1
	14	384986	(001321-003999)	Isolator [Epr]	3
	15	07791	(001321-003999)	Nut, Hex, Flng, M8 X 1.25	3
	16	1056300	(001321-003999)	Bracket Wldt, Mtg, Reg, Lpg[Gm 2010]	1
	17	371770	(001321-003999)	Screw	2
	18	371877	(001321-003999)	Washer, Flat, 0.38, Hardened	2
	19	1041151	(001321-003999)	Seal, Org, Sensor, Temp [Epr]	2
	20	1041152	(001321-003999)	Sensor, Temp [Epr]	1
	21	1042772	(001321-003999)	Fitting, Brs, Str, Pf06/Pm04	2
	22	27767	(001321-003999)	Fitting, Brs, Str, Em10/Pm06	1
	23	13048	(001321-001424)	Hose, Heater, 0.62id, 038.0l	1
	24	762282	(001321-001424)	Fitting, Hyd, Plug, Pm06	1
	25	9007553	(001321-003999)	Spring, 3/4 X 16 [Gm1.6L 2010 Lpg]	1
	26	1015547	(001321-003999)	Fitting, Adapter, Orifice, Pf06/Pm06	1
	27	1062116	(001425-003999)	Fitting, Plstc, Tee, Bm10/Bm10/Bm10	1
	28	63810	(001425-003999)	Clamp, Hose, Wormdrive, 0.56-1.06d, .56w	7
	29	51839	(001425-003999)	Fitting, Brs, E90, Em10/Pm06	1
	30	1016560	(001425-003999)	Hose, Afmkt, Rbr, Heater, 0.62id, 02ft	1

Fig. 17 - GM Engine Air Cleaner Group, Gasoline (000000-003999)

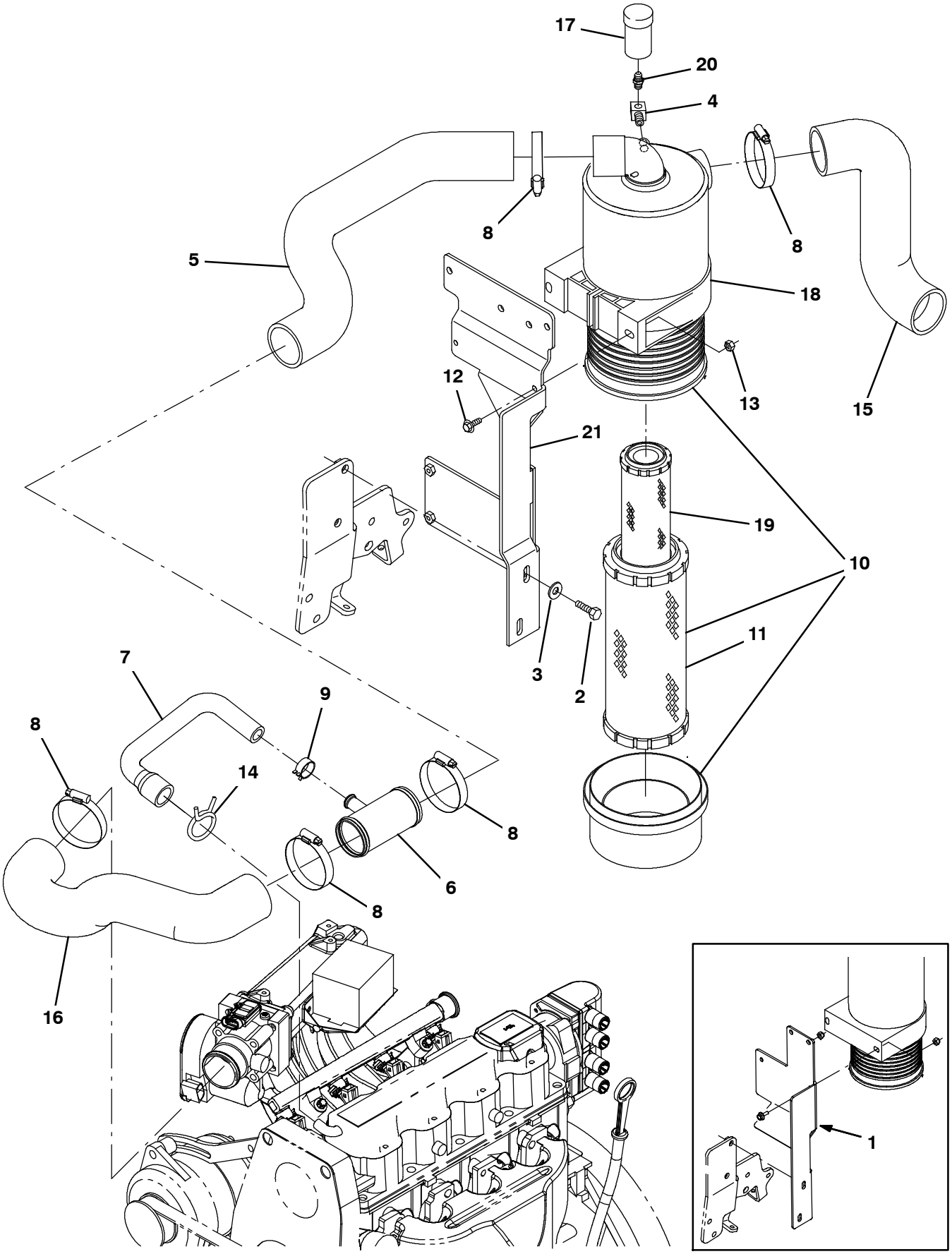

354629

Fig. 17 - GM Engine Air Cleaner Group, Gasoline (000000-003999)

	Ref.	Part No.	Serial Number	Description	Qty.
	1	1033676	(000000-001320)	Bracket, Mtg, Fltr, Air	1
	2	39277	(000000-003999)	Screw, Hex, M8 X 1.25 X 25, 8.8	2
	3	32491	(000000-003999)	Washer, Flat, 0.31, Std	2
	4	11984	(000000-003999)	Fitting, Pipe, E90, Pf02/Pm02 (CE Only)	1
	5	1035780	(000000-003999)	Hose, Intake, Mold, 2.0id [Epdm]	1
	6	1011780	(000000-003999)	Tube Wldt, Tee	1
	7	1032323	(000000-003999)	Hose, Vent, E90, 0.62id[Gm1.6l 2007]	1
	8	14432	(000000-003999)	Clamp, Hose, Wormdrive, 1.81-2.75d, .50w	5
	9	1011899	(000000-003999)	Clamp, Hose, Spring Stl, 0.86d X 0.38w	1
▽	10	369745	(000000-003999)	Filter Assy, Air	1
▲	11	369746	(000000-003999)	Element, Fltr, Air [Dn]	1
	12	1036892	(000000-003999)	Screw, Hex, M6 X 1.00 X 25, 9.8 Sems	2
	13	08708	(000000-003999)	Nut, Hex, Lock, M6 X 1.00, Nl	2
	14	371854	(000000-003999)	Clamp, Spring, 1.50	1
	15	1020949	(000000-003999)	Hose, Intake, Mold, 2.00id [Epdm]	1
	16	1031609	(000000-003999)	Hose, Intake, Mold, 2.0id, Gas	1
	17	03026	(000000-003999)	Indicator, Service, Fltr, Air [20h20 Dn] (CE Only)	1
	18	369747	(000000-003999)	Clamp, Mtg, Fltr, Air	1
	19	398279	(000000-003999)	Element, Fltr, Air, Safety (Option)	1
	20	51560-5	(000000-003999)	Fitting, Brs, Str, Pm02, Service (CE Only)	1
	21	1056355	(001321-003999)	Bracket, Mtg, Fltr, Air, Ecu	1

Fig. 18 - GM Engine Air Cleaner Group, LPG (000000-003999)

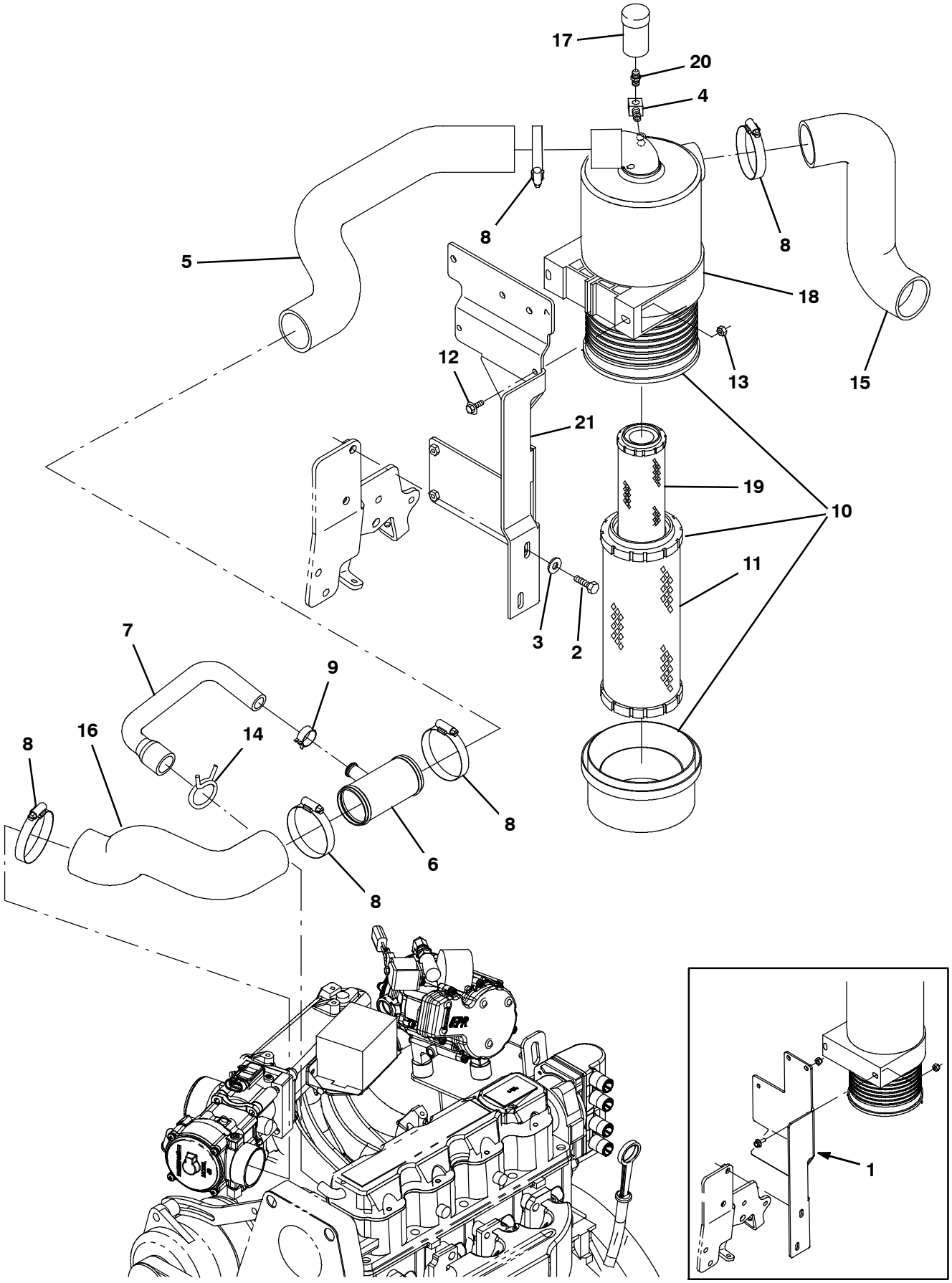

354630

Fig. 18 - GM Engine Air Cleaner Group, LPG (000000-003999)

	Ref.	Part No.	Serial Number	Description	Qty.
	1	1033676	(000000-001320)	Bracket, Mtg, Fltr, Air	1
	2	39277	(000000-)	Screw, Hex, M8 X 1.25 X 25, 8.8	2
	3	32491	(000000-)	Washer, Flat, 0.31, Std	2
	4	11984	(000000-)	Fitting, Pipe, E90, Pf02/Pm02 (CE Only)	1
	5	1035780	(000000-)	Hose, Intake, Mold, 2.0id [Epdm]	1
	6	1011780	(000000-)	Tube Wldt, Tee	1
	7	1032323	(000000-)	Hose, Vent, E90, 0.62id[Gm1.6l 2007]	1
	8	14432	(000000-)	Clamp, Hose, Wormdrive, 1.81-2.75d, .50w	5
	9	1011899	(000000-)	Clamp, Hose, Spring Stl, 0.86d X 0.38w	1
▽	10	369745	(000000-)	Filter Assy, Air	1
▲	11	369746	(000000-)	Element, Fltr, Air [Dn]	1
	12	1036892	(000000-)	Screw, Hex, M6 X 1.00 X 25, 9.8 Sems	2
	13	08708	(000000-)	Nut, Hex, Lock, M6 X 1.00, Nl	2
	14	371854	(000000-)	Clamp, Spring, 1.50	1
	15	1020949	(000000-)	Hose, Intake, Mold, 2.00id [Epdm]	1
	16	1031553	(000000-001320)	Hose, Intake, Mold, 2.0id, Lpg	1
	16	1054558	(001321-)	Hose, Intake, Mold, 2.0id, Lpg [Gm 2010]	1
	17	03026	(000000-)	Indicator, Service, Fltr, Air [20h20 Dn] (CE Only)	1
	18	369747	(000000-)	Clamp, Mtg, Fltr, Air	1
	19	398279	(000000-)	Element, Fltr, Air, Safety (Option)	1
	20	51560-5	(000000-)	Fitting, Brs, Str, Pm02, Service (CE Only)	1
	21	1056355	(001321-)	Bracket, Mtg, Fltr, Air, Ecu	1

Fig. 19 - GM Engine Alternator and Fan Group (000000-003999)

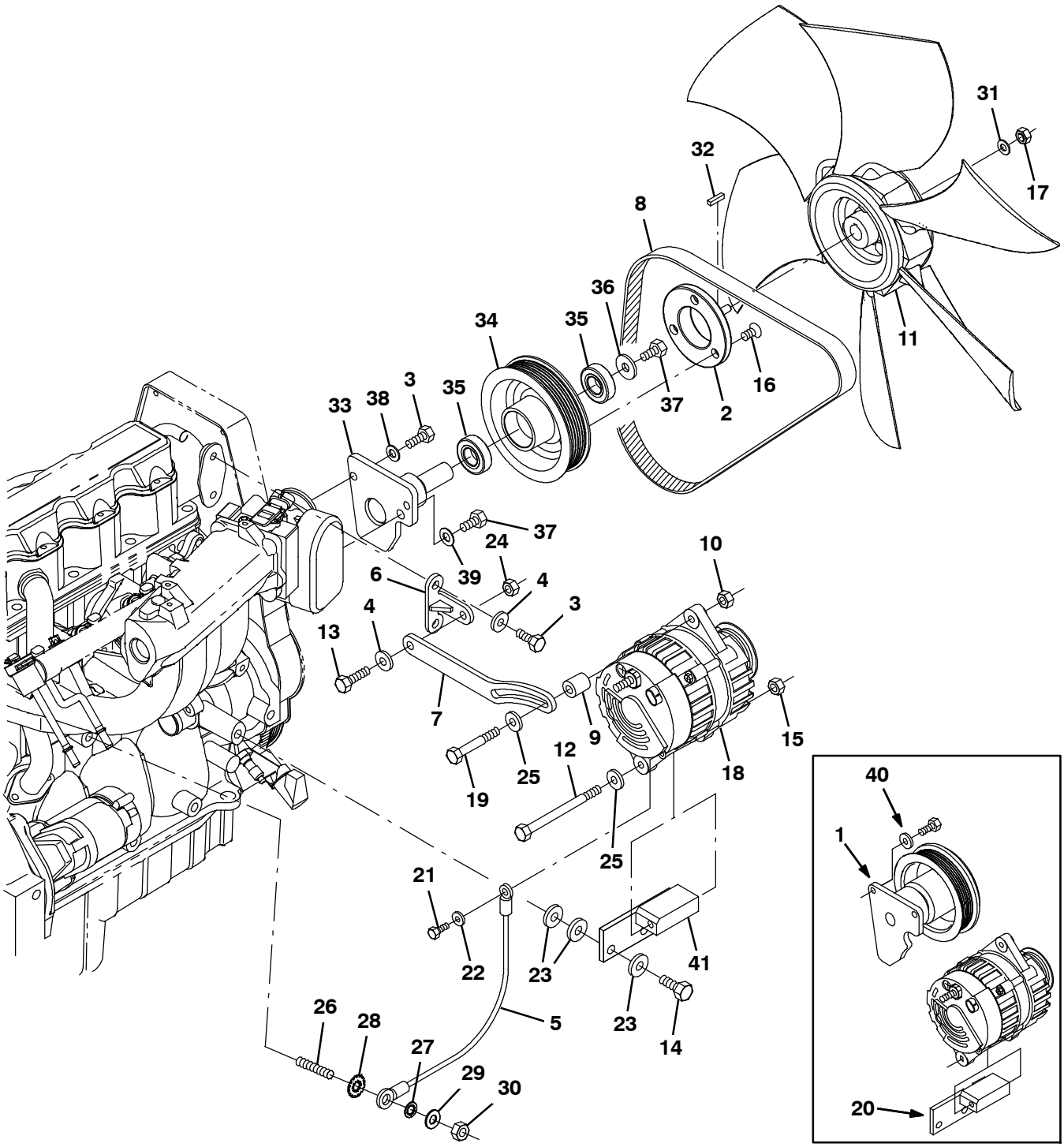

354636

Fig. 19 - GM Engine Alternator and Fan Group (000000-003999)

Ref.	Part No.	Serial Number	Description	Qty.
1	9007088	(000000-001320)	Sheave Assy Kit, Repair	1
2	1035530	(000000-003999)	Spacer, Fan, Taper [2007]	1
3	16931	(000000-003999)	Screw, Hex, M8 X 1.25 X 20, 8.8	4
4	371865	(000000-003999)	Washer, Flat, 0.31, Hardened	7
5	31525	(000000-003999)	Wire, 10ga 16.0l Blk .25ring /.38ring	1
6	371871	(000000-003999)	Bracket, Anchor, Strap, Alternator	1
7	371872	(000000-003999)	Strap, Adj, Alternator	1
8	1033644	(000000-003999)	Belt, Ribbed, 38.5l	1
9	372557	(000000-003999)	Spacer, Strap, Adj, Alternator	1
10	39311	(000000-003999)	Nut, Hex, Std, M8 X 1.25	1
11	1046237	(000000-003999)	Fan, Cooling, 16.0d, 6 Blade	1
12	39785	(000000-003999)	Screw, Hex, .31-18 X 4.50, G5	1
13	76958	(000000-003999)	Screw, Hex, .31-18 X 1.75, G5	1
14	06961	(000000-003999)	Screw, Hex, M10 X 1.50 X 20, 8.8	2
15	32983	(000000-003999)	Nut, Hex, Lock, .31-18, Nl	1
16	48996	(000000-003999)	Screw, Flt, Soc, .38-16 X 0.75, Al	3
17	08709	(000000-003999)	Nut, Hex, Lock, M8 X 1.25, Nl	1
18	393209	(000000-003999)	Alternator, 12vdc 075a [Multi Grv]	1
19	363976	(000000-003999)	Screw, Hex, M8 X 1.25 X 60, 8.8, Fl	1
20	9006917	(000000-001320)	Bracket Kit, Alternator, Repair	1
21	42011	(000000-003999)	Screw, Hex, 10-24 X 0.50, Ss	1
22	19066	(000000-003999)	Washer, Flat, 10	1
23	32485	(000000-003999)	Washer, Flat, 0.38, Sae	4
24	19313	(000000-003999)	Nut, Hex, Std, .31-18	1
25	39349	(000000-003999)	Washer, Flat, 0.31, Sae	2
26	384442	(000000-003999)	Stud, M10 X 1.50 [35]	1
27	32988	(000000-003999)	Washer, Lock, Int, 0.38	1
28	41142	(000000-003999)	Washer, Lock, Int-Ext, 0.38	1
29	32485	(000000-003999)	Washer, Flat, 0.38, Sae	1
30	32716	(000000-003999)	Nut, Hex, Jam, M10 X 1.5, Ss	1
31	32491	(000000-003999)	Washer, Flat, 0.31, Std	1
32	00960	(000000-003999)	Key, Sq, 0.12 X 0.12, 0.50l	1
33	1055381	(001321-003999)	Plate Wldt, Fan, Hub [Gm 1.6l]	1
34	1055425	(001321-003999)	Sheave, Mach [Gm1.6l]	1
35	1055377	(001321-003999)	Bearing, Ball, 20mm B 42mm D 12mm W	2
36	1014563	(001321-003999)	Washer, Flat, 0.40b 1.12d .12, Ss	1
37	21195	(001321-003999)	Screw, Hex, .38-16 X 0.75, G5	2
38	39349	(001321-003999)	Washer, Flat, 0.31, Sae	2
39	32485	(001321-003999)	Washer, Flat, 0.38, Sae	1
40	371865	(000000-001320)	Washer, Flat, 0.31, Hardened	2
41	1008640	(001321-003999)	Bracket Wldt, Alternator, Lower [Gm1.6l]	1

Fig. 20 - GM Engine Muffler Group (000000-003999)

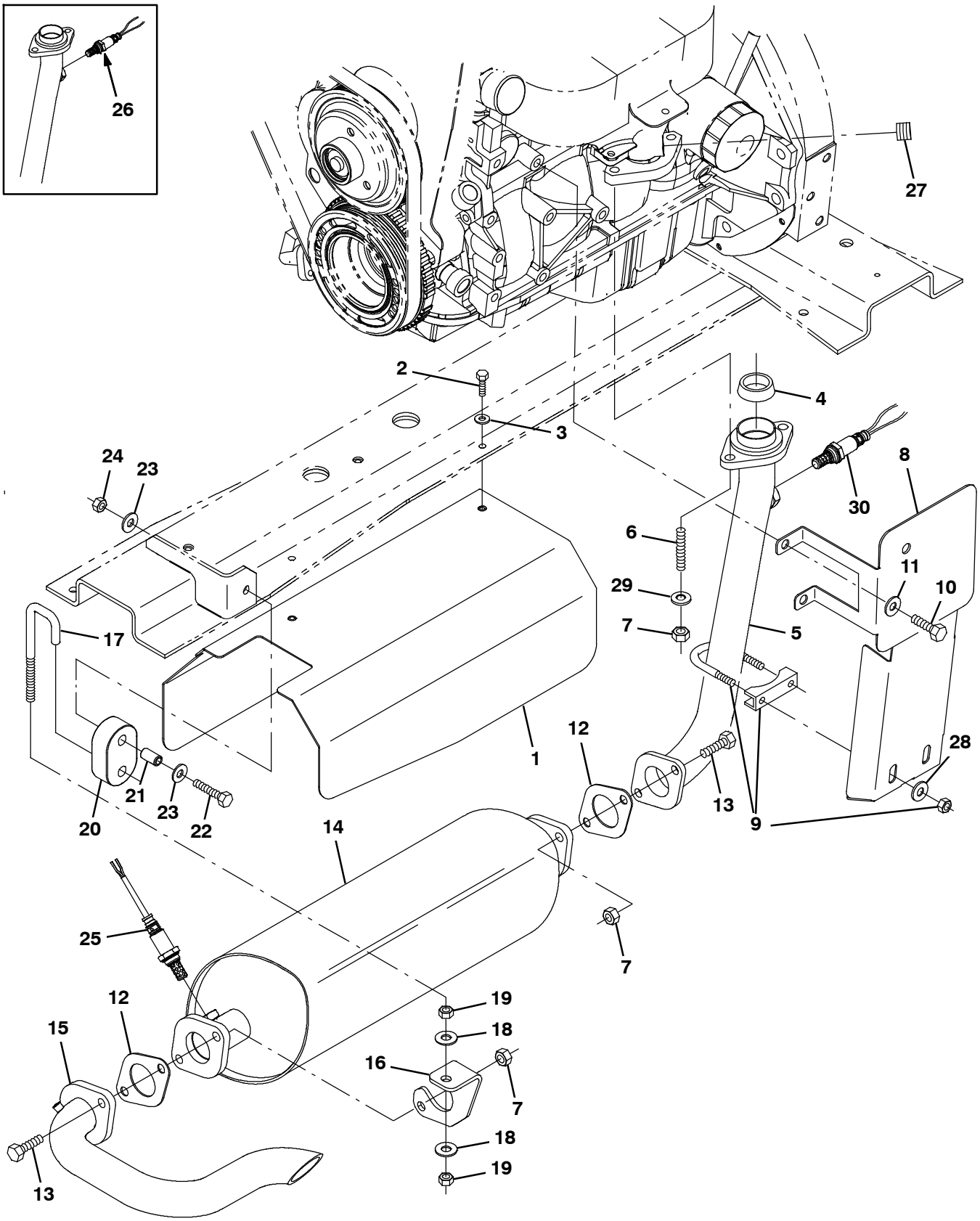

354637

Fig. 20 - GM Engine Muffler Group (000000-003999)

Ref.	Part No.	Serial Number	Description	Qty.
1	1028994	(000000-003999)	Channel, Shield, Muffler [M20/T20 2007]	1
2	08716	(000000-003999)	Screw, Hex, M6 X 1.00 X 20, Ss	2
3	32483	(000000-003999)	Washer, Flat, 0.25, Sae	2
4	371861	(000000-003999)	Gasket, Flng, Pipe, Exhaust	1
5	9012597	(000000-003999)	Pipe Kit, Exhaust, Replmt [M20.T20, M30]	1
6	384442	(000000-003999)	Stud, M10 X 1.50 [35]	2
7	08166	(000000-003999)	Nut, Hex, Stover, M10 X 1.50	6
8	9003832	(000000-003999)	Shield, Heat, Gas/Lpg, Replmt	1
8	9004983	(000000-003999)	Shield, Heat, Gas/Lpg, Replmt, TJ (Japan Only)	1
8	9004986	(000000-003999)	Shield, Heat, Gas/Lpg, Replmt, CE (CE Only)	1
9	24012	(000000-003999)	Clamp, Muffler, 1.62d	1
10	06961	(000000-003999)	Screw, Hex, M10 X 1.50 X 20, 8.8	2
11	32485	(000000-003999)	Washer, Flat, 0.38, Sae	2
12	1011216	(000000-003999)	Gasket, Exhaust, .07, 1.63id, 2/3.4bc	2
13	39284	(000000-003999)	Screw, Hex, M10 X 1.50 X 35, 8.8	4
14	1028136	(000000-001320)	Muffler, Catalytic [Gm 1.6l 2007]	1
14	1056241	(001321-003999)	Muffler, Catalytic [Gm 1.6l 2010]	1
15	1043660	(000000-003999)	Tube, Exhaust, Flng, 1.5d	1
16	1028929	(000000-003999)	Bracket, Mtg, Muffler	1
17	1013117	(000000-003999)	Rod, Hanger, Isolator	1
18	32492	(000000-003999)	Washer, Flat, 0.38, Std	2
19	25014	(000000-003999)	Nut, Hex, Std, .38-16	2
20	1013031	(000000-003999)	Isolator, Rbr	1
21	222496	(000000-003999)	Sleeve, P/M, 0.31b 0.50d 0.9l [430ss]	1
22	222505	(000000-003999)	Screw, Hex, M8 X 1.25 X 45, Ss	1
23	01685	(000000-003999)	Washer, Flat, 0.38b 0.88d .08, Ss	2
24	08713	(000000-003999)	Nut, Hex, Lock, M8 X 1.25, Nl, Ss	1
25	1028558	(000000-003999)	Sensor, Exhaust, Tailpipe	1
26	1028559	(000000-001320)	Sensor, Oxygen [Gm 1.6L/3.0L 2007]	1
27	371860	(000000-003999)	Fitting, Pipe, Plug, Metric, M18,Soc	1
28	32491	(000000-003999)	Washer, Flat, 0.31, Std	2
29	41187	(000000-003999)	Washer, Flat, Belleville, .38	2
30	1028559	(000000-001320)	Sensor, Oxygen [Gm 1.6L/3.0L 2007]	1
30	1028558	(001321-003999)	Sensor, Exhaust, Tailpipe	1

Fig. 21 - GM Engine Radiator and Mount Group (000000-001249)

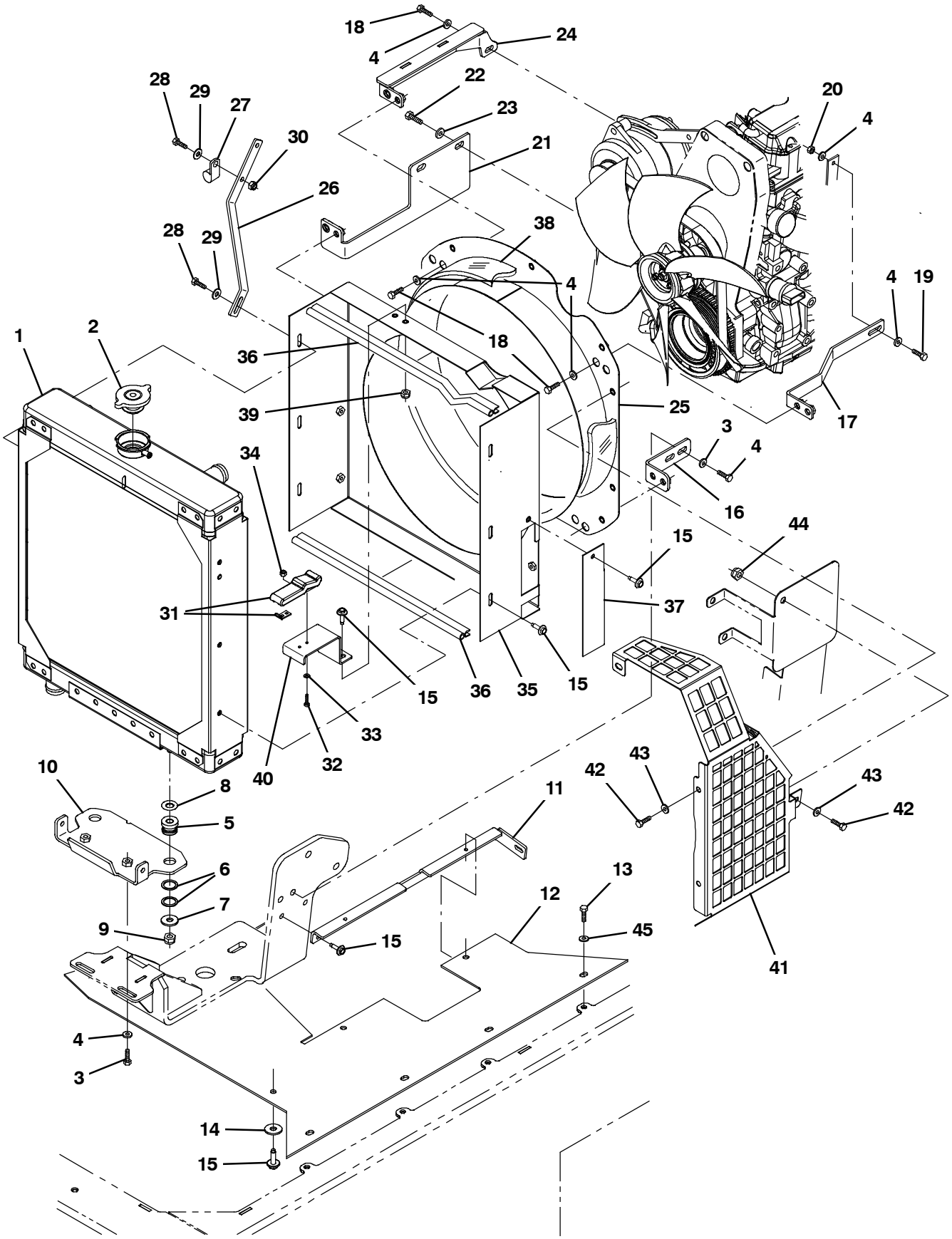

354638

Fig. 21 - GM Engine Radiator and Mount Group (000000-001249)

Ref.	Part No.	Serial Number	Description	Qty.
1	1041291	(000000-001249)	Radiator, Alm	1
2	1045764	(000000-001249)	Cap, Radiator, 14psi [Stant Ao-2516]	1
3	39277	(000000-001249)	Screw, Hex, M8 X 1.25 X 25, 8.8	4
4	32491	(000000-001249)	Washer, Flat, 0.31, Std	15
5	54274	(000000-001249)	Isolator, Vib, Bshg, 1.1d 0.6l .4b 0.78h	2
6	09832	(000000-001249)	Washer, Flat, 0.81b 1.06d .06, Stl	4
7	1014563	(000000-001249)	Washer, Flat, 0.40b 1.12d .12, Ss	2
8	32486	(000000-001249)	Washer, Flat, 0.50, Sae	2
9	41430	(000000-001249)	Nut, Hex, Lock, M10 X 1.5, Nl	2
10	1035976	(000000-001249)	Bracket, Sppt, Radiator, Upper	1
11	1043897	(000000-001249)	Bracket, Skirt, Rbr	1
12	1043940	(000000-001249)	Skirt, Debris, Radiator	1
13	15678	(000000-001249)	Screw, Hex, M6X1.00X16, Ss	4
14	41178	(000000-001249)	Washer, Flat, 0.25, Fendr	3
15	1036892	(000000-001249)	Screw, Hex, M6 X 1.00 X 25, 9.8 Sems	14
16	1045415	(000000-001249)	Bracket, Fan, Lh	1
17	1045447	(000000-001249)	Bracket, Fan, Upper, Lh	1
18	16931	(000000-001249)	Screw, Hex, M8 X 1.25 X 20, 8.8	9
19	39277	(000000-001249)	Screw, Hex, M8 X 1.25 X 25, 8.8	1
20	08709	(000000-001249)	Nut, Hex, Lock, M8 X 1.25, Nl	1
21	1045419	(000000-001249)	Bracket, Fan, Rh	1
22	06961	(000000-001249)	Screw, Hex, M10 X 1.50 X 20, 8.8	2
23	32492	(000000-001249)	Washer, Flat, 0.38, Std	2
24	1045530	(000000-001249)	Bracket Wldt, Mtg, Fan, Upper	1
25	1045432	(000000-001249)	Shroud Wldt, Fan, Venturi, 16.4d	1
26	1045599	(000000-001249)	Bracket, Mtg, Radiator	1
27	30407	(000000-001249)	Clip, Keeper, Open	1
28	06942	(000000-001249)	Screw, Hex, M6 X 1.00 X 16, 8.8	3
29	32490	(000000-001249)	Washer, Flat, 0.25, Std	3
30	08708	(000000-001249)	Nut, Hex, Lock, M6 X 1.00, Nl	1
31	49800	(000000-001249)	Latch	1
32	06927	(000000-001249)	Screw, Pan, Phl, M4 X 0.70 X 16, 4.8	2
33	19064	(000000-001249)	Washer, Flat, 06	2
34	02850	(000000-001249)	Nut, Hex, Lock, M4 X 0.70, Nl	2
35	9004326	(000000-001249)	Shroud Wldt, Fan, Gas/Lp, Replmt	1
35	9004987	(000000-001249)	Shroud Wldt, Fan, Gas/Lp, Replmt, TJ (Japan Only)	1
35	9004988	(000000-001249)	Shroud Wldt, Fan, Gas/Lp, Replmt, Ce (CE Only)	1
36	1031625	(000000-001249)	Seal, Afmkt, Bulb, Str, .50d F/11ga 03ft	1
37	1045433	(000000-001249)	Bracket, Cover	1
38	1044920	(000000-001249)	Insulation, Acstc, 0.05, 52.8 X 2.13	1
39	08708	(000000-001249)	Nut, Hex, Lock, M6 X 1.00, Nl	2
40	1045443	(000000-001249)	Bracket, Mtg, Latch	1
41	1046495	(000000-001249)	Guard, Fan, Lpg, Ce (CE Only)	1
42	16735	(000000-001249)	Screw, Hex, M8 X 1.25 X 16, 8.8 (CE Only)	4
43	32491	(000000-001249)	Washer, Flat, 0.31, Std (CE Only)	4
44	08709	(000000-001249)	Nut, Hex, Lock, M8 X 1.25, Nl (CE Only)	1
45	01684	(000000-001249)	Washer, Flat, 0.27B 0.69D .05, Ss	1

Fig. 22 - GM Engine Radiator and Mount Group (001250-003999)

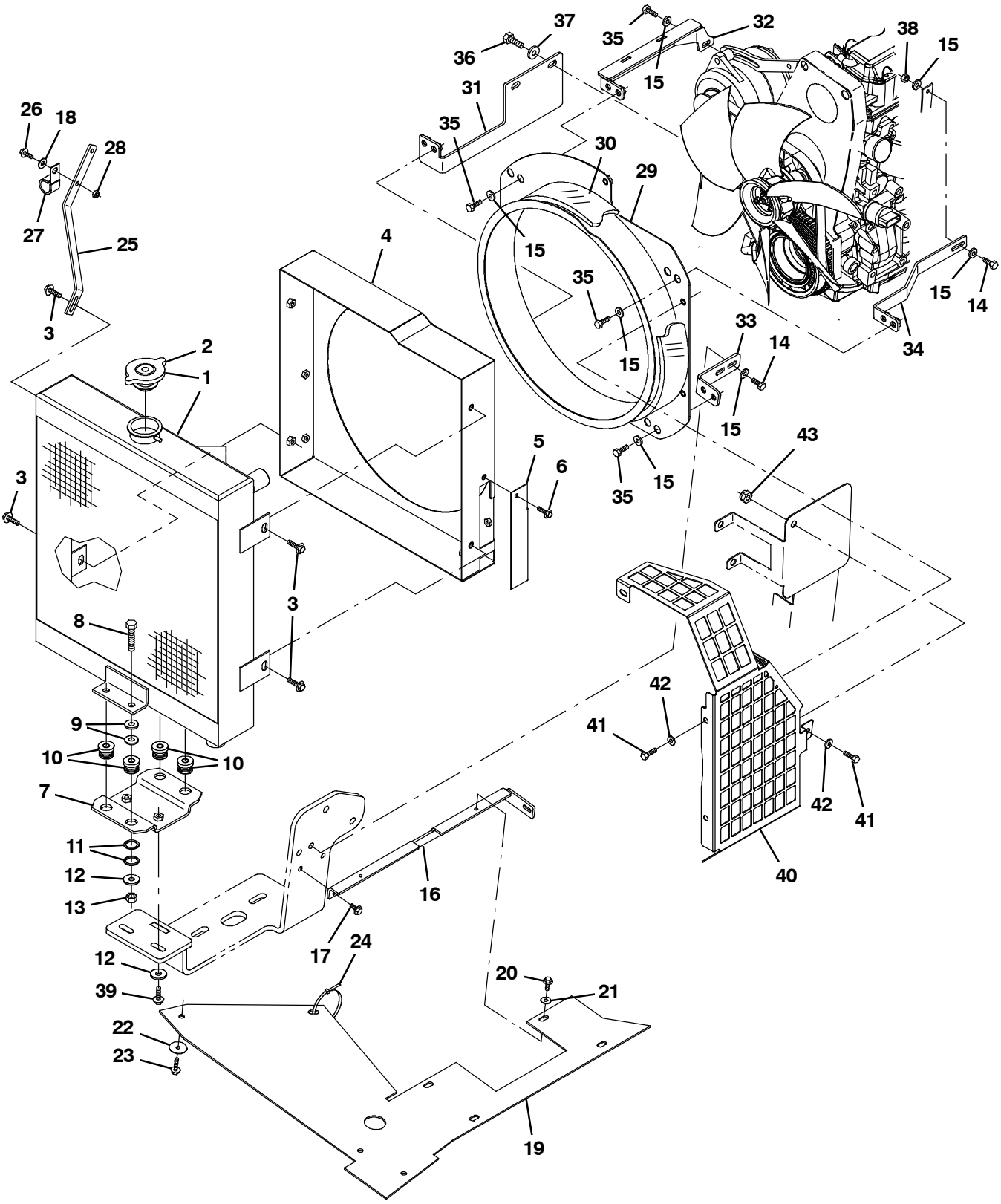

354638

Fig. 22 - GM Engine Radiator and Mount Group (001250-003999)

	Ref.	Part No.	Serial Number	Description	Qty.
▽	1	1045940	(001250-003999)	Radiator, W/ Hyd Cooler [Side X Side]	1
▲	2	1057504	(001250-003999)	Cap, Radiator, 16 Psi	1
	3	1037346	(001250-003999)	Screw, Hex, M8 X 1.25 X 25, 9.8, Sems	4
	4	9006811	(001250-003999)	Shrd Wldt,Fan,G/Lp, Replmt [M20/M30/T20]	1
	4	9006812	(001250-003999)	Shrd Wldt,Fan,G/Lp, Replmt [CE] (CE Only)	1
	4	9006813	(001250-003999)	Shrd Wldt,Fan,G/Lp, Replmt [TJ] (Japan Only)	1
	5	1045433	(001250-003999)	Bracket, Cover	1
	6	1036892	(001250-003999)	Screw, Hex, M6 X 1.00 X 25, 9.8 Sems	2
	7	1046962	(001250-003999)	Bracket, Mtg, Radiator	1
	8	06962	(001250-003999)	Screw, Hex, M10 X 1.50 X 45, 8.8	4
	9	32492	(001250-003999)	Washer, Flat, 0.38, Std	8
	10	54274	(001250-003999)	Isolator, Vib, Bshg, 1.1d 0.6l .4b 0.78h	4
	11	09832	(001250-003999)	Washer, Flat, 0.81b 1.06d .06, Stl	8
	12	1014563	(001250-003999)	Washer, Flat, 0.40b 1.12d .12, Ss	6
	13	41430	(001250-003999)	Nut, Hex, Lock, M10 X 1.5, Nl	4
	14	39277	(001250-003999)	Screw, Hex, M8 X 1.25 X 25, 8.8	3
	15	32491	(001250-003999)	Washer, Flat, 0.31, Std	12
	16	1043897	(001250-003999)	Bracket, Skirt, Rbr	1
	17	1040467	(001250-003999)	Screw, Hex, M6 X 1.00 X 20, 9.8, Sems	2
	18	32490	(001250-003999)	Washer, Flat, 0.25, Std	1
	19	1049887	(001250-003999)	Skirt, Debris, Radiator	1
	20	361339	(001250-003999)	Screw, Hex, M6 X 1.00 X 16, Fmg	2
	21	01684	(001250-003999)	Washer, Flat, 0.27b 0.69d .05, Ss	2
	22	41178	(001250-003999)	Washer, Flat, 0.25, Fendr	3
	23	1036892	(001250-003999)	Screw, Hex, M6 X 1.00 X 25, 9.8 Sems	3
	24	49266	(001250-003999)	Tie, Cable, Nyl, 07.3l .19w 1.8 Max D	1
	25	1049355	(001250-003999)	Bracket, Mtg, Radiator	1
	26	06942	(001250-003999)	Screw, Hex, M6 X 1.00 X 16, 8.8	2
	27	30407	(001250-003999)	Clip, Keeper, Open	1
	28	08708	(001250-003999)	Nut, Hex, Lock, M6 X 1.00, Nl	1
	29	1046039	(001250-003999)	Shroud Wldt, Fan, 16.25d [Side X Side]	1
	30	1044920	(001250-003999)	Insulation, Acstc, 0.05, 52.8X21.13	1
	31	1045419	(001250-003999)	Bracket, Fan, Rh	1
	32	1045530	(001250-003999)	Bracket Wldt, Mtg, Fan, Upper	1
	33	1045415	(001250-003999)	Bracket, Fan, Lh	1
	34	1045447	(001250-003999)	Bracket, Fan, Upper, Lh	1
	35	16931	(001250-003999)	Screw, Hex, M8 X 1.25 X 20, 8.8	9
	36	39283	(001250-003999)	Screw, Hex, M10 X 1.50 X 25, 8.8	2
	37	32492	(001250-003999)	Washer, Flat, 0.38, Std	2
	38	08165	(001250-003999)	Nut, Hex, Stover, M8 X 1.25	1
	39	1037355	(001250-003999)	Screw, Hex, M8 X 1.25 X 35, 9.8, Sems	2
	40	1046495	(001250-003999)	Guard, Fan, Lpg, Ce (CE Only)	1
	41	16735	(001250-003999)	Screw, Hex, M8 X 1.25 X 16, 8.8 (CE Only)	4
	42	32491	(001250-003999)	Washer, Flat, 0.31, Std (CE Only)	4
	43	08709	(001250-003999)	Nut, Hex, Lock, M8 X 1.25, Nl (CE Only)	1

Fig. 23 - GM Engine Radiator Hose Group (000000-003999)

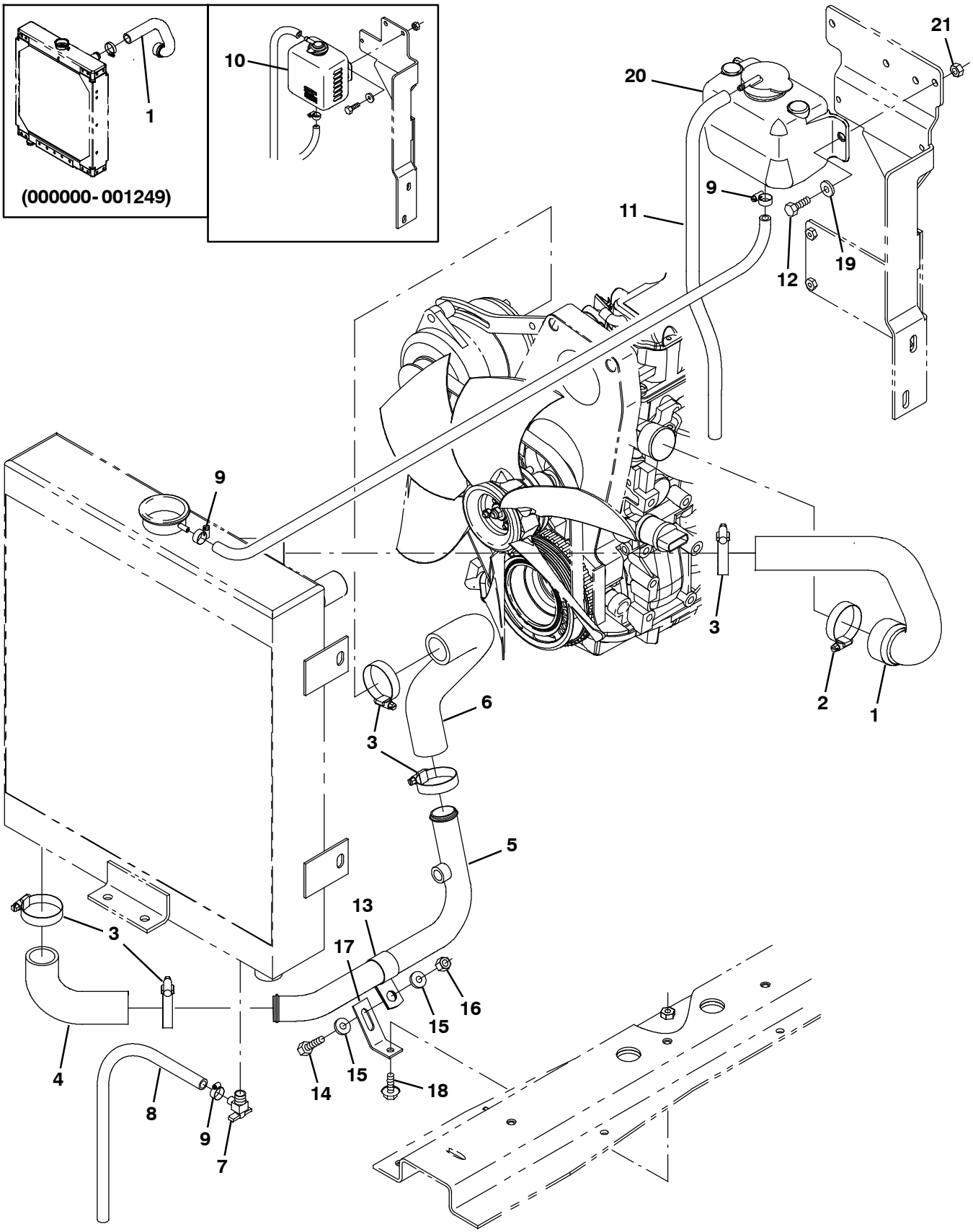

354717

Fig. 23 - GM Engine Radiator Hose Group (000000-003999)

Ref.	Part No.	Serial Number	Description	Qty.
1	1014747	(000000-003999)	Hose, Coolant, Mold, 1.125id To 1.50id	1
2	22297	(000000-003999)	Clamp, Hose, Wormdrive, 1.56-2.50d, .50w	1
3	79381	(000000-003999)	Clamp, Hose, Wormdrive, 1.25-2.00D, .50W	5
4	1007482	(000000-003999)	Hose, Rbr, E90, 1.25id 1.25id	1
5	1043322	(000000-003999)	Tube, Coolant, 1.3d, Lower	1
6	1019265	(000000-003999)	Hose, Radiator, Lower, Mold	1
7	51305	(000000-003999)	Fitting, Draincock, E90, .25npt	1
8	73471	(000000-003999)	Hose, Pvc, Clr, 0.38id 0.56od 022.0l	1
9	43844	(000000-003999)	Clamp, Hose, Wormdrive, 0.25-0.62d, .31w	3
10	1023853	(000000-001320)	Tank, Coolant, 03.30w 4.7hi 04.7l,1liter	1
11	1015041	(000000-001320)	Hose, Afmkt, Coolant Recvy, 05ft	1
11	87738	(001321-003999)	Hose, Fuel, 0.18id, 29.0l	1
12	16931	(000000-003999)	Screw, Hex, M8 X 1.25 X 20, 8.8	2
13	58366	(000000-003999)	Clamp, Cable, Stl, 1.25d X 1.00w, 1hole	1
14	09010	(000000-003999)	Screw, Hex, M8 X 1.25 X 25, Ss	1
15	01685	(000000-003999)	Washer, Flat, 0.38b 0.88d .08, Ss	2
16	08713	(000000-003999)	Nut, Hex, Lock, M8 X 1.25, Nl, Ss	1
17	1035214	(000000-003999)	Bracket, Tube, Coolant	1
18	1037346	(000000-003999)	Screw, Hex, M8 X 1.25 X 25, 9.8, Sems	1
19	32491	(000000-003999)	Washer, Flat, 0.31, Std	2
20	1054382	(001321-003999)	Tank, Coolant, 03.6w 04.1hi 05.5l,1liter	1
21	08709	(000000-003999)	Nut, Hex, Lock, M8 X 1.25, Nl	2

Fig. 24 - Mitsubishi Engine and Mount Group, Gas (004000-)

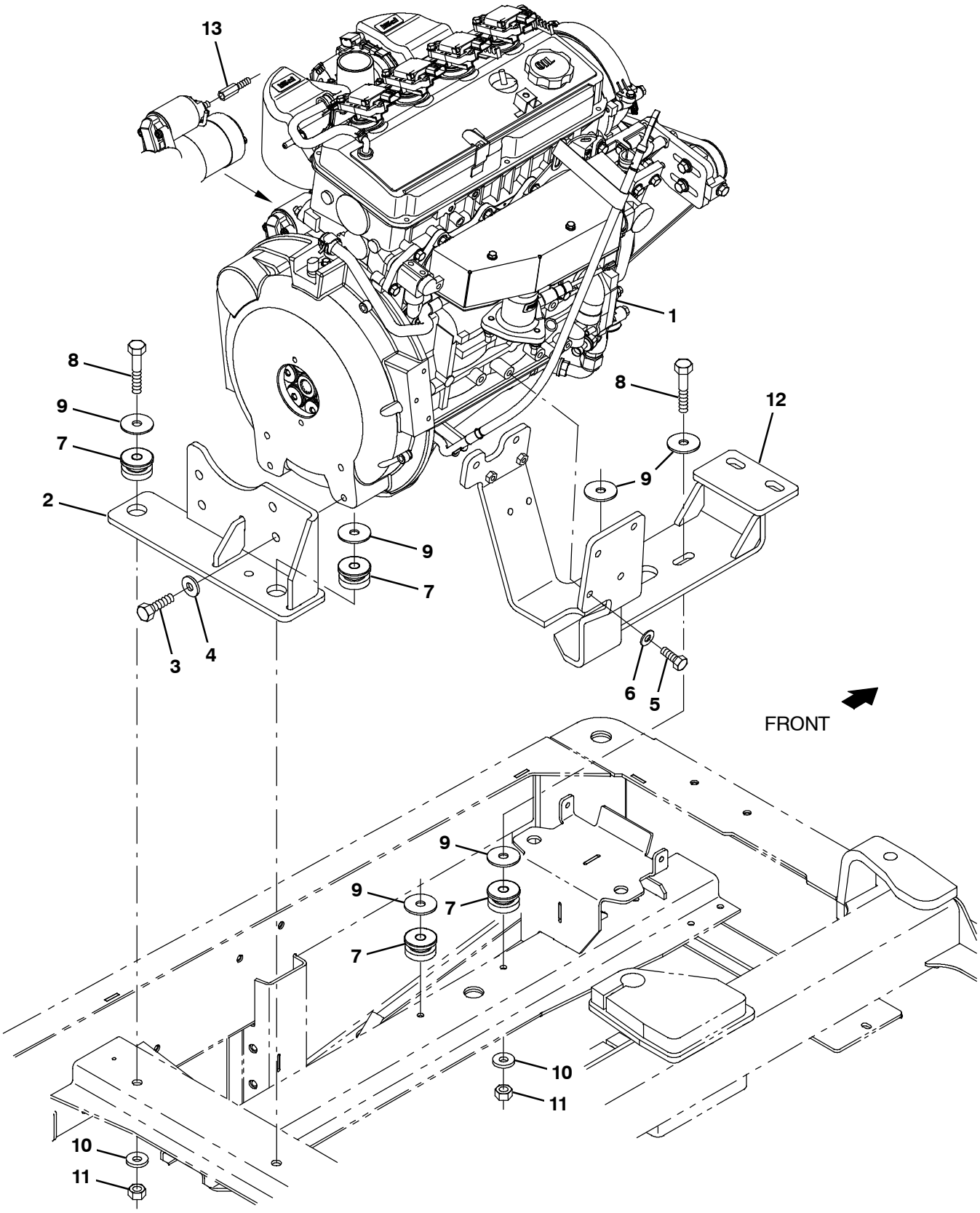

356291

Fig. 24 - Mitsubishi Engine and Mount Group, Gas (004000-)

	Ref.	Part No.	Serial Number	Description	Qty.
▽	1	1071155	(004000- 004582)	Engine, Gas [Mitsubishi] (See Engine Breakdown)	1
▲		393982	(004000-)	Element, Fltr, Oil, Spin- On (Mits)	1
▽	1	9014202	(004583-)	Engine, Block, Long [Mits 12mm] (See Engine Breakdown)	1
▲		393982	(004000-)	Element, Fltr, Oil, Spin- On (Mits)	1
	2	1070756	(004000-)	Bracket Wldt, Mtg, Eng, Rear [Mit 2013]	1
	3	06968	(004000-)	Screw, Hex, M12 X 1.75 X 35, 8.8	4
	4	32486	(004000-)	Washer, Flat, 0.50 Sae	4
	5	07299	(004000-)	Screw, Hex, M10 X 1.25 X 25, 8.8	6
	6	32485	(004000-)	Washer, Flat, 0.38 Sae	6
	7	51176	(004000-)	Isolator, Vib, .50d	4
	8	06972	(004000-)	Screw, Hex, M12 X 1.75 X 60, 8.8	4
	9	04414	(004000-)	Washer, Flat, 0.53b 1.88d .12, Stl, Pl	4
	10	32493	(004000-)	Washer, Flat, 0.50 Std	3
	11	08711	(004000-)	Nut, Hex, Lock, M12 X 1.75,Nl	3
	12	1070751	(004000-)	Bracket Wldt, Mtg, Engine [Mit 2013]	1
	13	1072669	(004000-)	Stand- Off, Hex, M8 X M8, Metal	1

Fig. 25 - Mitsubishi Engine and Mount Group, LPG (004000-)

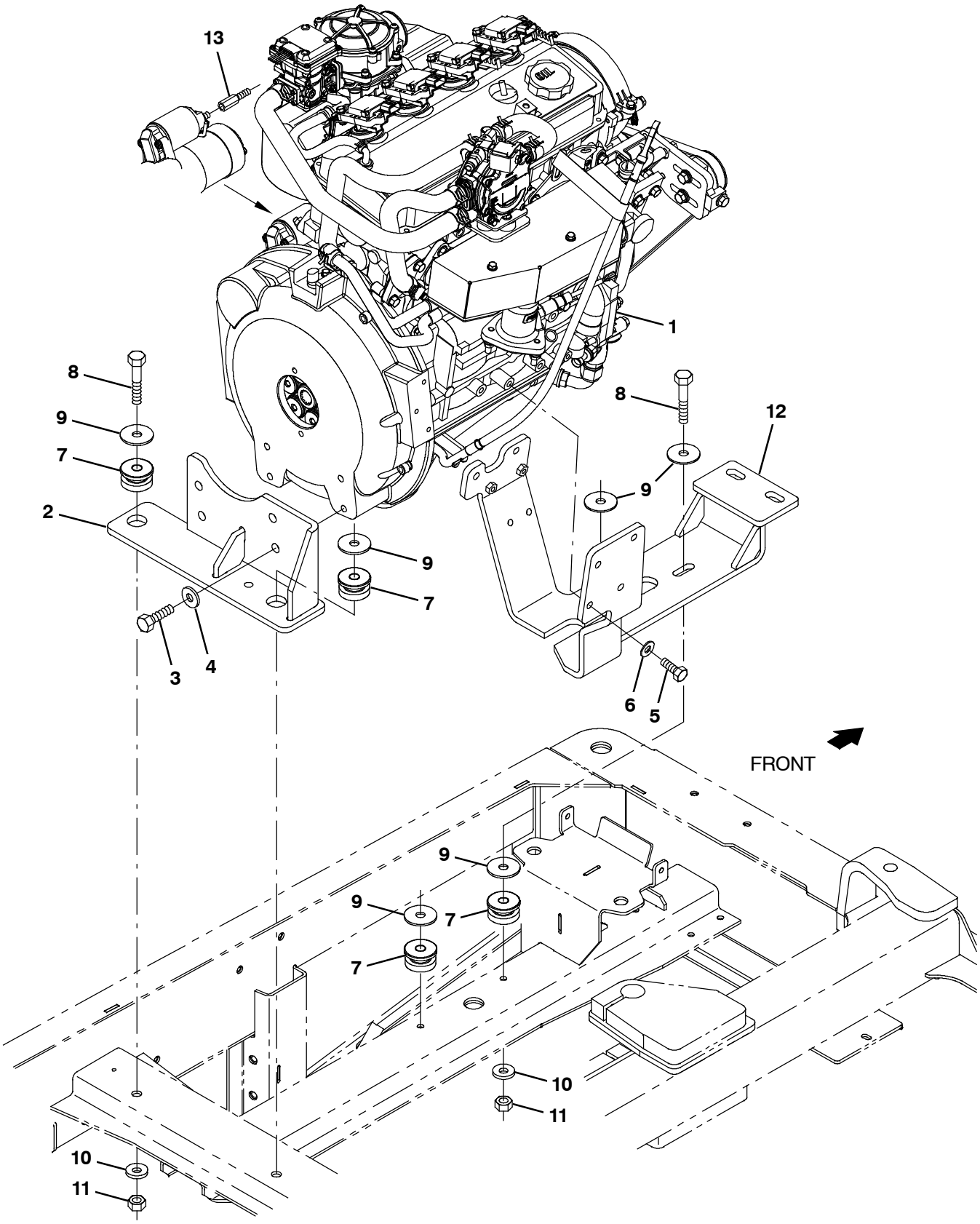

356292

Fig. 25 - Mitsubishi Engine and Mount Group, LPG (004000-)

	Ref.	Part No.	Serial Number	Description	Qty.
▽	1	1070348	(004000- 004582)	Engine, LPG [Mitsubishi] (See Engine Breakdown)	1
▲		393982	(004000-)	Element, Fltr, Oil, Spin- On (Mits)	1
▽	1	9014202	(004583-)	Engine, Block, Long [Mits 12mm] (See Engine Breakdown)	1
▲		393982	(004000-)	Element, Fltr, Oil, Spin- On (Mits)	1
	2	1070756	(004000-)	Bracket Wldt, Mtg, Eng, Rear [Mit 2013]	1
	3	06968	(004000-)	Screw, Hex, M12 X 1.75 X 35, 8.8	4
	4	32486	(004000-)	Washer, Flat, 0.50 Sae	4
	5	07299	(004000-)	Screw, Hex, M10 X 1.25 X 25, 8.8	6
	6	32485	(004000-)	Washer, Flat, 0.38 Sae	6
	7	51176	(004000-)	Isolator, Vib, .50d	4
	8	06972	(004000-)	Screw, Hex, M12 X 1.75 X 60, 8.8	4
	9	04414	(004000-)	Washer, Flat, 0.53b 1.88d .12, Stl, Pl	4
	10	32493	(004000-)	Washer, Flat, 0.50 Std	3
	11	08711	(004000-)	Nut, Hex, Lock, M12 X 1.75,Nl	3
	12	1070751	(004000-)	Bracket Wldt, Mtg, Engine [Mit 2013]	1
	13	1072669	(004000-)	Stand- Off, Hex, M8 X M8, Metal	1

Fig. 26 - Mitsubishi Engine EFI Group, Gasoline (004000-)

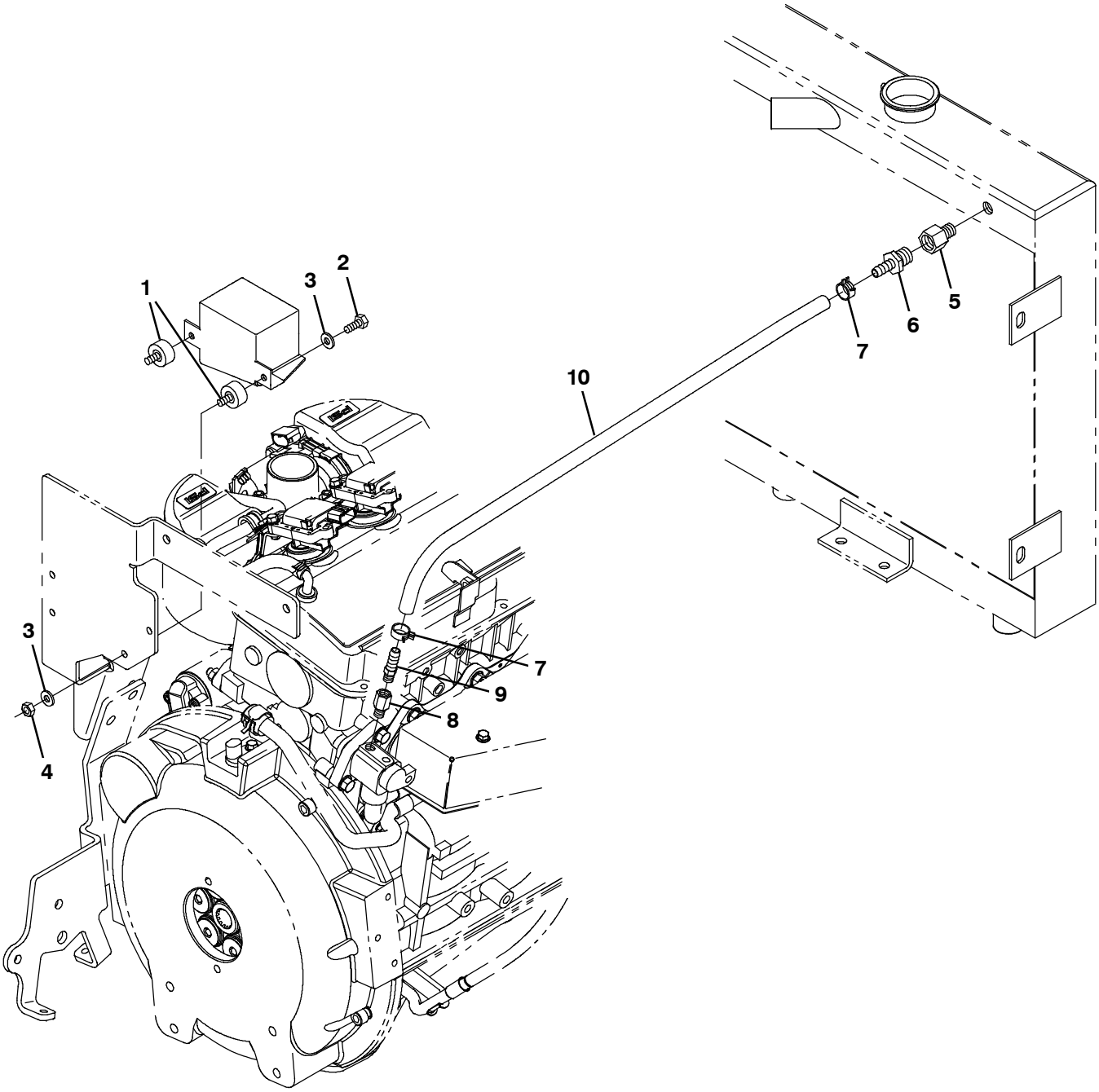

356293

Fig. 26 - Mitsubishi Engine EFI Group, Gasoline (004000-)

Ref.	Part No.	Serial Number	Description	Qty.
1	372470	(004000-)	Isolator, Box, Relay	2
2	19315	(004000-)	Screw, Hex, .25- 20 X 0.50, G5	2
3	32490	(004000-)	Washer, Flat, 0.25, Std	4
4	19312	(004000-)	Nut, Hex, Std, .25- 20	2
5	1071440	(004000-)	Fitting, Brs, Str, Pf06/Pm04	1
6	36159	(004000-)	Fitting, Brs, Str, Bm06/Pm06	1
7	1072559	(004000-)	Clamp, Hose, Spring Stl, 0.58d X 0.31w	2
8	1071502	(004000-)	Fitting, Brs, Str, Pf02/Pm02 [Bspt]	1
9	1055552	(004000-)	Fitting, Brs, Str, Bm06/Pm02	1
10	1072408	(004000-)	Hose, Afmkt, Rbr, Heater, 0.38id, 03ft	1

Fig. 27 - Mitsubishi Engine EFI Group, LPG (004000-)

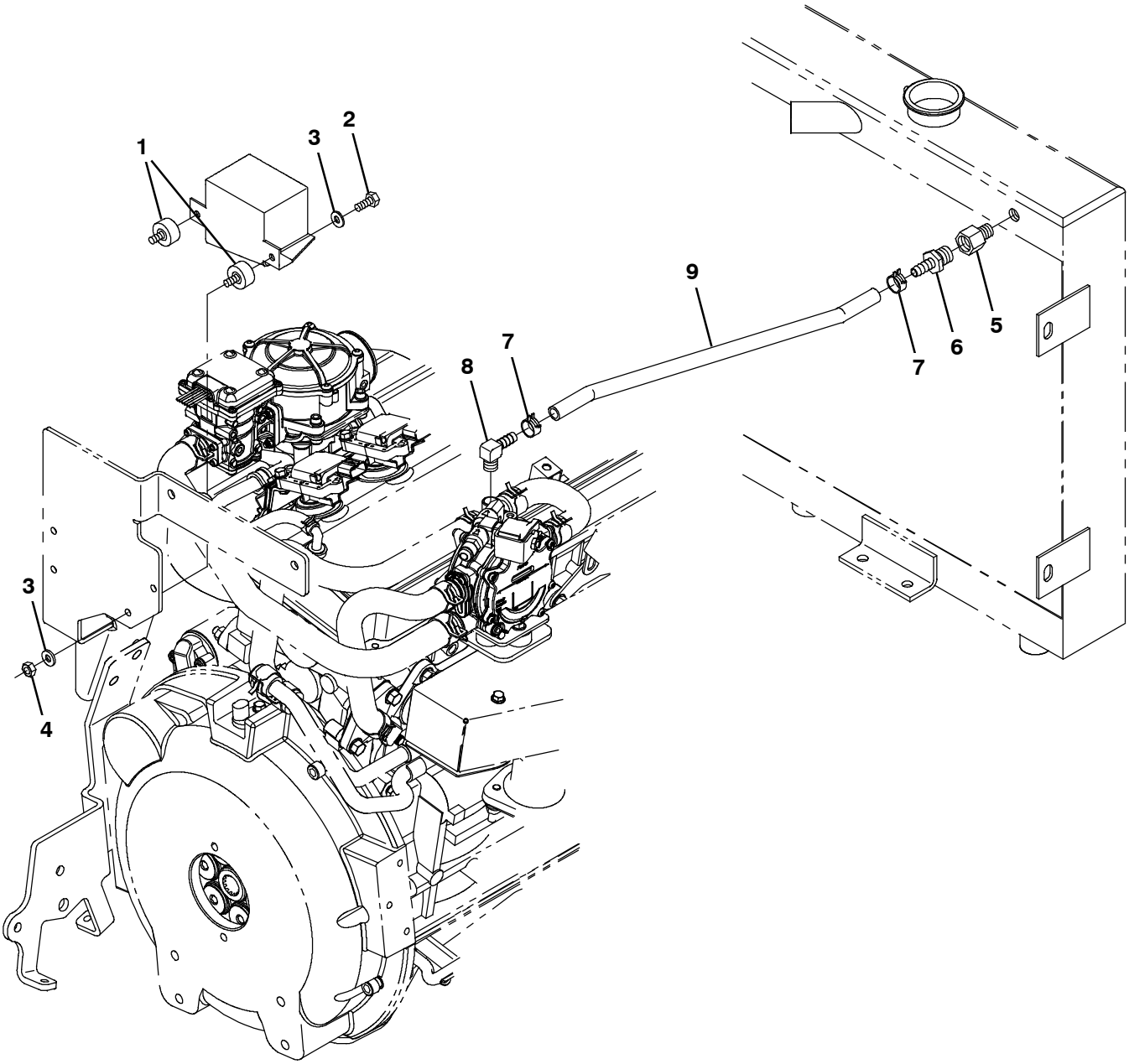

356294

Fig. 27 - Mitsubishi Engine EFI Group, LPG (004000-)

Ref.	Part No.	Serial Number	Description	Qty.
1	372470	(004000-)	Isolator, Box, Relay	2
2	19315	(004000-)	Screw, Hex, .25- 20 X 0.50, G5	2
3	32490	(004000-)	Washer, Flat, 0.25, Std	4
4	19312	(004000-)	Nut, Hex, Std, .25- 20	2
5	1071440	(004000-)	Fitting, Brs, Str, Pf06/Pm04	1
6	36159	(004000-)	Fitting, Brs, Str, Bm06/Pm06	1
7	1072559	(004000-)	Clamp, Hose, Spring Stl, 0.58d X 0.31w	2
8	1015815	(004000-)	Fitting, Brs, E90, Bm06/Pm04	1
9	1072408	(004000-)	Hose, Afmkt, Rbr, Heater, 0.38id, 03ft	1

Fig. 28 - Mitsubishi Engine Air Cleaner Group, Gasoline (004000-)

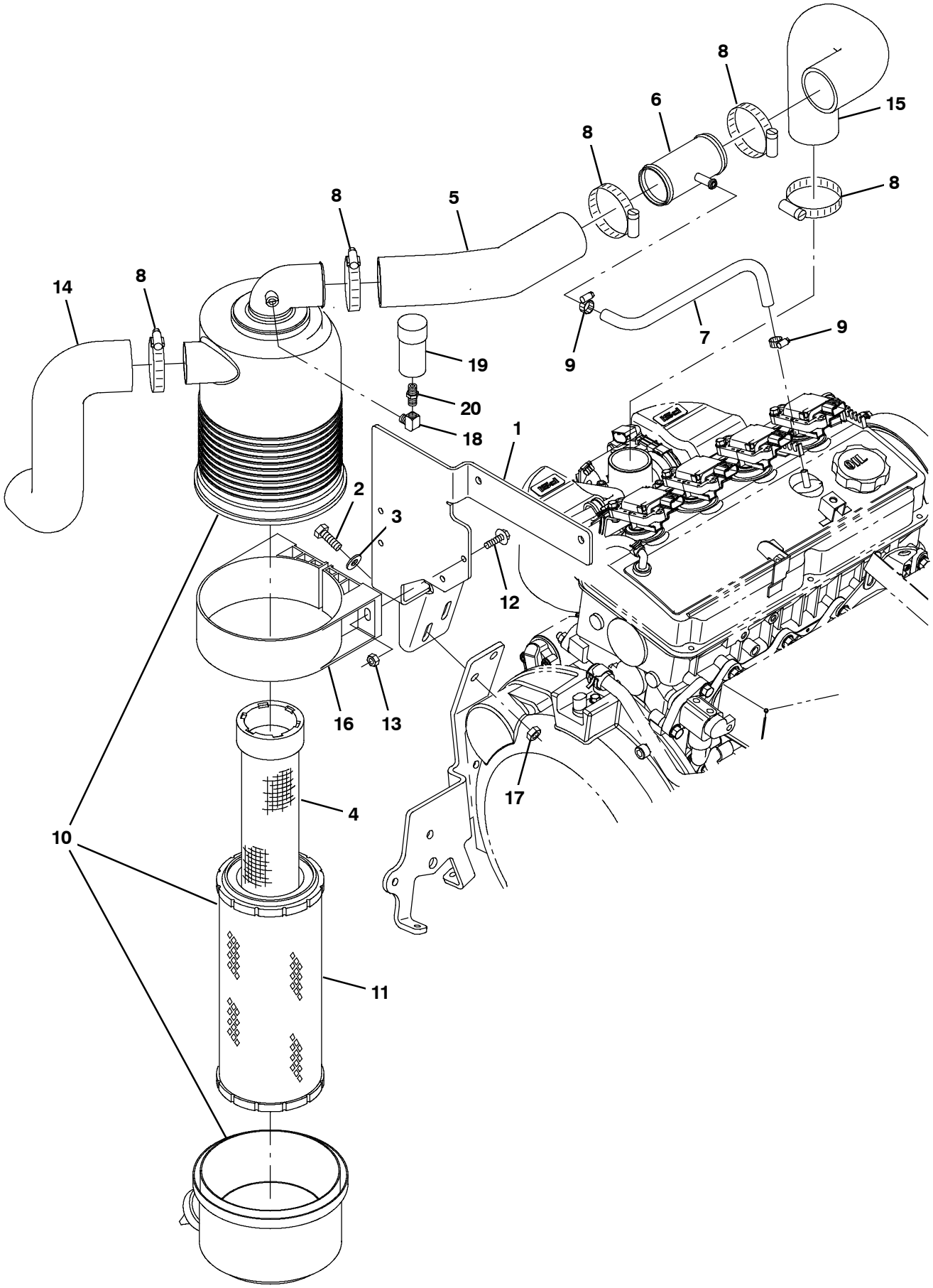

356343 - M30

Fig. 28 - Mitsubishi Engine Air Cleaner Group, Gasoline (004000-)

	Ref.	Part No.	Serial Number	Description	Qty.
	1	1070822	(004000-)	Bracket, Mtg, Fltr, Air [Mit 2013]	1
	2	39277	(004000-)	Screw, Hex, M8 X 1.25 X 25, 8.8	2
	3	32491	(004000-)	Washer, Flat, 0.31, Std	2
	4	398279	(004000-)	Element, Fltr, Air, Safety (OPTION)	1
	5	1070788	(004000-)	Hose, Intake, Mold [Epdm Mit 2013]	1
	6	1070833	(004000-)	Tube Wldt, Tee [Mit 2013]	1
	7	381391	(004000-)	Hose, Drain,Overflow,Radiator[1pick=1ft]	1
	8	14432	(004000-)	Clamp, Hose, Wormdrive, 1.81-2.75d, .50w	5
	9	54333	(004000-)	Clamp, Hose, Wormdrive, 0.31-0.88d, .31w	2
▽	10	369745	(004000-)	Filter Assy, Air	1
▲	11	369746	(004000-)	Element, Fltr, Air [Dn]	1
	12	1036892	(004000-)	Screw, Hex, M6 X 1.00 X 25, 9.8 Sems	2
	13	08708	(004000-)	Nut, Hex, Lock, M6 X 1.00, Nl	2
	14	1020949	(004000-)	Hose, Intake, Mold, 2.00id [Epdm]	1
	15	1071404	(004000-)	Hose, Intake, Mold, Gas [Epdm Mit 2013]	1
	16	369747	(004000-)	Clamp, Mtg, Fltr, Air	1
	17	08709	(004000-)	Nut, Hex, Lock, M8 X 1.25, Nl	2
	18	11984	(004000-)	Fitting, Pipe, E90, Pf02/Pm02 (CE Only)	1
	19	03026	(004000-)	Indicator, Service, Fltr, Air [20h20 Dn] (CE Only)	1
	20	51560-5	(004000-)	Fitting, Brs, Str, Pm02, Service (CE Only)	1

Fig. 29 - Mitsubishi Engine Air Cleaner Group, LPG (004000-)

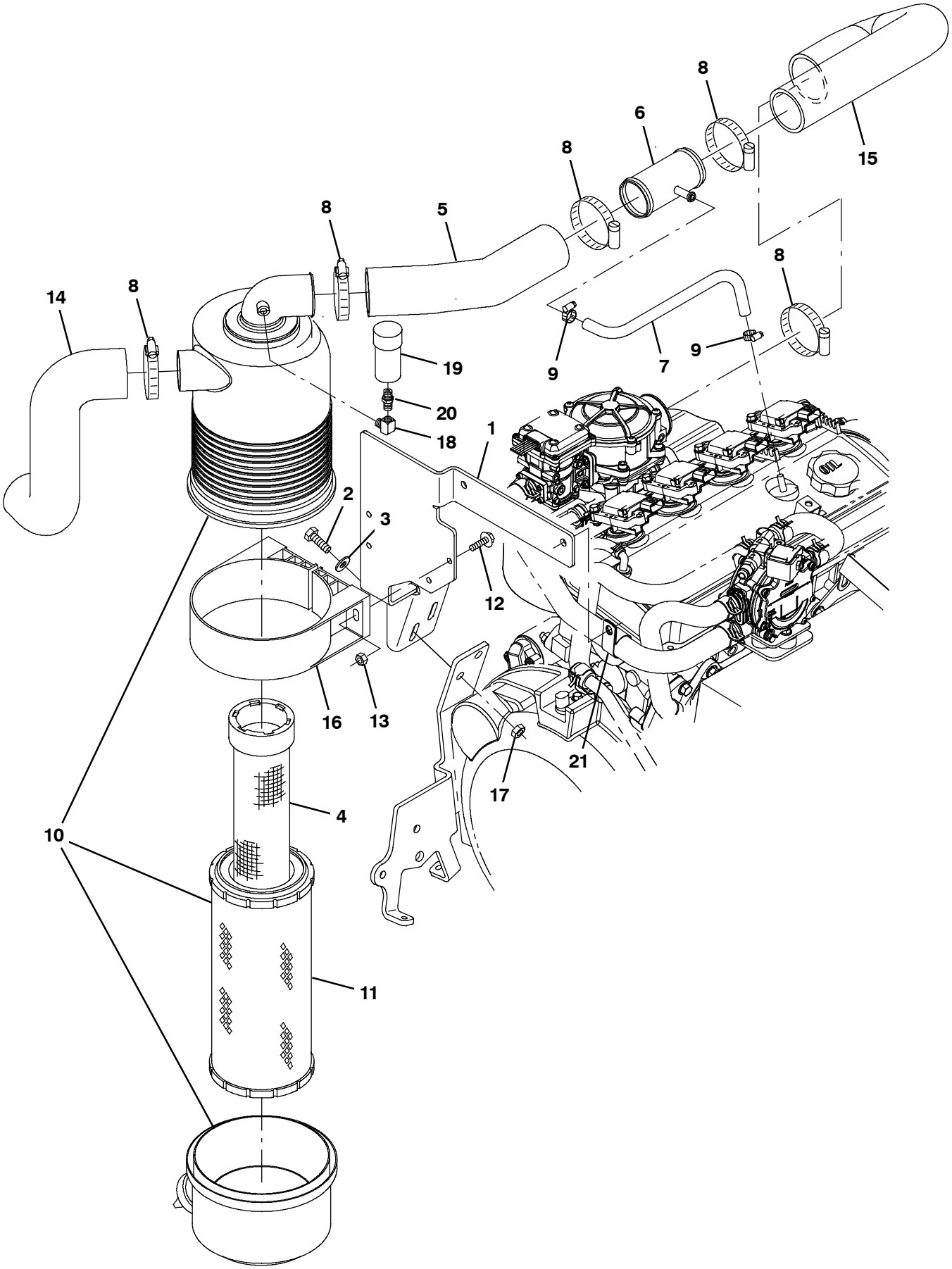

356344 - M30

Fig. 29 - Mitsubishi Engine Air Cleaner Group, LPG (004000-)

	Ref.	Part No.	Serial Number	Description	Qty.
	1	1070822	(004000-)	Bracket, Mtg, Fltr, Air [Mit 2013]	1
	2	39277	(004000-)	Screw, Hex, M8 X 1.25 X 25, 8.8	2
	3	32491	(004000-)	Washer, Flat, 0.31, Std	2
	4	398279	(004000-)	Element, Fltr, Air, Safety (OPTION)	1
	5	1070788	(004000-)	Hose, Intake, Mold [Epdm Mit 2013]	1
	6	1070833	(004000-)	Tube Wldt, Tee [Mit 2013]	1
	7	381391	(004000-)	Hose, Drain,Overflow,Radiator[1pick=1ft]	1
	8	14432	(004000-)	Clamp, Hose, Wormdrive, 1.81-2.75d, .50w	5
	9	54333	(004000-)	Clamp, Hose, Wormdrive, 0.31-0.88d, .31w	2
▽	10	369745	(004000-)	Filter Assy, Air	1
▲	11	369746	(004000-)	Element, Fltr, Air [Dn]	1
	12	1036892	(004000-)	Screw, Hex, M6 X 1.00 X 25, 9.8 Sems	2
	13	08708	(004000-)	Nut, Hex, Lock, M6 X 1.00, Nl	2
	14	1020949	(004000-)	Hose, Intake, Mold, 2.00id [Epdm]	1
	15	1070787	(004000-)	Hose, Intake, Mold, Lpg [Epdm Mit2013]	1
	16	369747	(004000-)	Clamp, Mtg, Fltr, Air	1
	17	08709	(004000-)	Nut, Hex, Lock, M8 X 1.25, Nl	2
	18	11984	(004000-)	Fitting, Pipe, E90, Pf02/Pm02 (CE ONLY)	1
	19	03026	(004000-)	Indicator, Service, Fltr, Air [20h20 Dn] (CE ONLY)	1
	20	51560-5	(004000-)	Fitting, Brs, Str, Pm02, Service (CE ONLY)	1
	21	69234	(004000-)	Clamp, Cable, Stl, 1.00d X 0.75w, 1hole	1

Fig. 30 - Mitsubishi Engine Alternator and Fan Group (004000-)

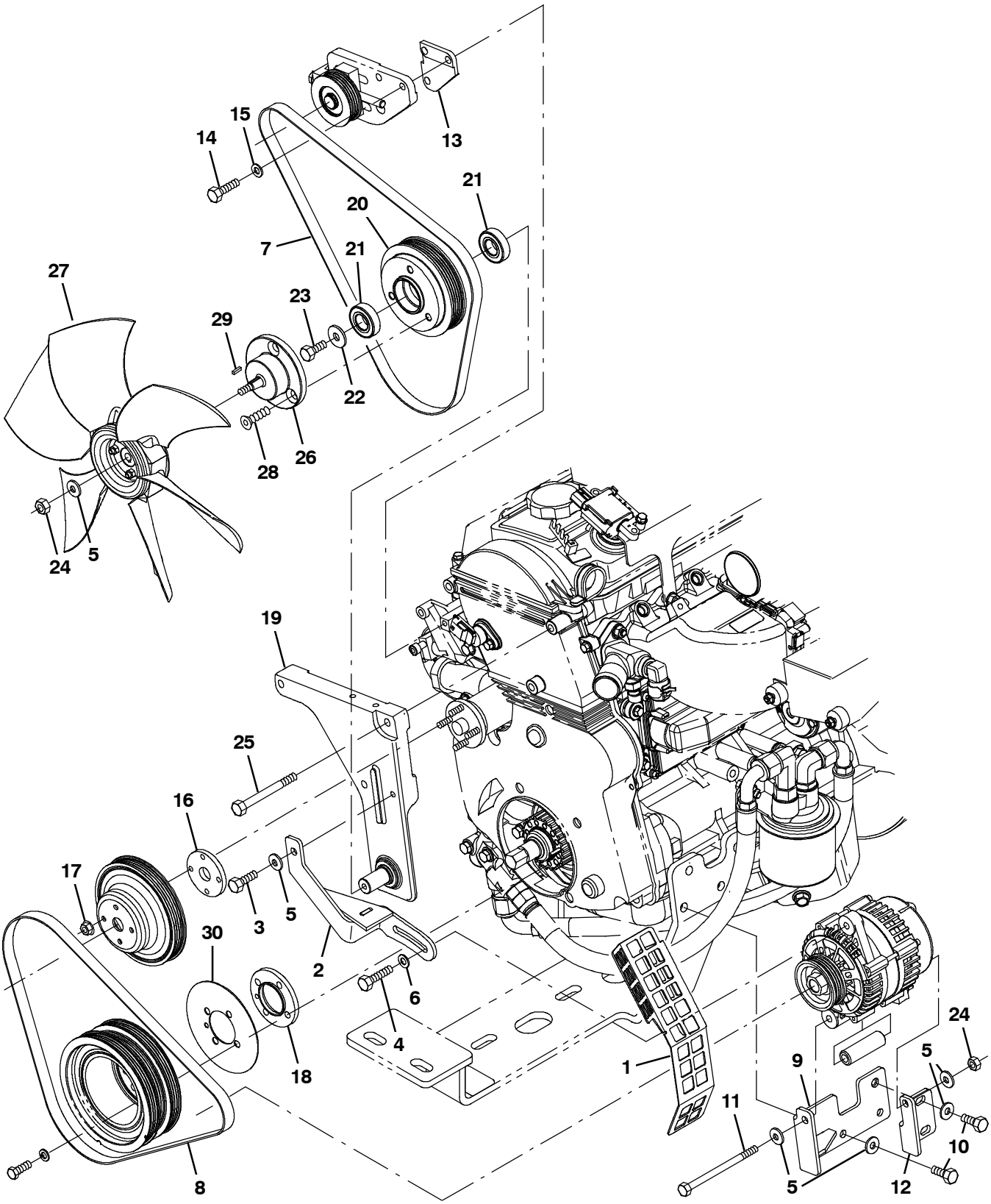

356297

Fig. 30 - Mitsubishi Engine Alternator and Fan Group (004000-)

Ref.	Part No.	Serial Number	Description	Qty.
1	1071727	(004000-)	Guard, Fan, Side	1
2	1070890	(004000-)	Arm Wldt, Alternator [Mit 2013]	1
3	16931	(004000-)	Screw, Hex, M8 X 1.25 X 20, 8.8	1
4	04375	(004000-)	Screw, Hex, M8 X 1.25 X 40, 8.8, Fl	1
5	32491	(004000-)	Washer, Flat, 0.31, Std	7
6	41186	(004000-)	Washer, Flat, Belleville, .31	1
7	1071144	(004000-)	Belt, Ribbed, Fan, 42.13l	1
8	1071145	(004000-)	Belt, Ribbed, Alternator, 41.5l	1
9	1070764	(004000-)	Bracket Wldt, Alternator [Mit13]	1
10	39277	(004000-)	Screw, Hex, M8 X 1.25 X 25, 8.8	3
11	49883	(004000-)	Screw, Hex, M8 X 1.25 X 120, 8.8, Fl	1
12	1070619	(004000-)	Bracket, Mtg, Alternator [Mit 2013]	1
13	1071107	(004000-)	Block, Spacer	1
14	76570	(004000-)	Screw, Hex, M8 X 1.25 X 30, 8.8	2
15	39349	(004000-)	Washer, Flat, 0.31, Sae	2
16	1071108	(004000-)	Spacer, Pump, Water	1
17	07790	(004000-)	Nut, Hex, Flng, M6 X 1.00	4
18	1071110	(004000-)	Spacer, Crankfshaft	1
19	1073529	(004000-)	Plate Wldt, Shaft, Fan [Shaft Extended]	1
20	1070426	(004000-)	Sheave, Mach [Mit 2615rpm Fan]	1
21	1055377	(004000-)	Bearing, Ball, 20mm B 42mm D 12mm W	2
22	1017218	(004000-)	Washer, Flat, 0.32b 1.00d .12, Ss	1
23	16735	(004000-)	Screw, Hex, M8 X 1.25 X 16, 8.8	1
24	08709	(004000-)	Nut, Hex, Lock, M8 X 1.25, Nl	2
25	39281	(004000-)	Screw, Hex, M8 X 1.25 X 90, 8.8	3
26	1070431	(004000-)	Spacer, Fan, Taper [Mit 2013]	1
27	1031566	(004000-)	Fan, Cooling, 14.1d, 6 Blade, 0.5b Taper	1
28	48998	(004000-)	Screw, Flt, Soc, .38- 16 X 1.00, Al	3
29	00960	(004000-)	Key, Sq, 0.12 X 0.12, 0.50l	1
30	1072421	(004000-)	Plate, Shield, Dust	1

Fig. 31 - Mitsubishi Engine Muffler Group (004000-)

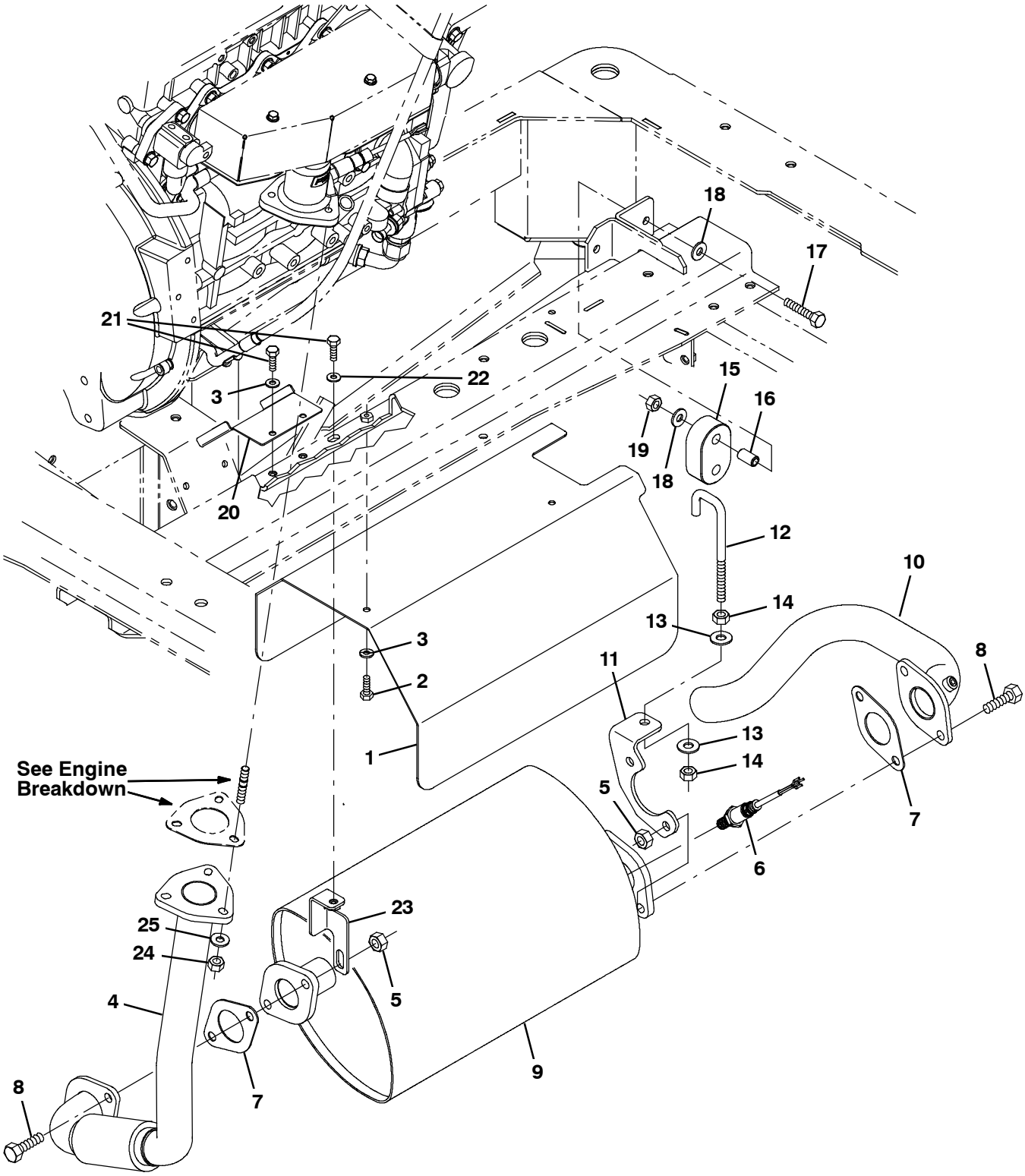

356298

Fig. 31 - Mitsubishi Engine Muffler Group (004000-)

Ref.	Part No.	Serial Number	Description	Qty.
1	1028994	(004000-)	Channel, Shield, Muffler [M20/T20 2007]	1
2	08716	(004000-)	Screw, Hex, M6 X 1.0 X 20, Ss	2
3	32483	(004000-)	Washer, Flat, 0.25, Sae	4
4	9013159	(004000-)	Pipe Kit, Exhaust, Replmt [Mako Mitsu]	1
5	08166	(004000-)	Nut, Hex, M10 X 1.50 [Stover]	4
6	1028558	(004000-)	Sensor, Exhaust, Tailpipe	1
7	1011216	(004000-)	Gasket, Exhaust, 2hole, 3.4bc	2
8	39284	(004000-)	Screw, Hex, M10 X 1.5 X 35, 8.8	4
9	1071376	(004000-)	Muffler, Catalytic [Mit 2.0l 2013]	1
10	1028753	(004000-)	Tube, Exhaust, Flng, 1.5d [M20/T20 2007]	1
11	1028929	(004000-)	Bracket, Mtg, Muffler [M20/T20 2007]	1
12	1013117	(004000-)	Rod, Hanger, Isolator	1
13	32492	(004000-)	Washer, Flat, 0.38, Std	2
14	25014	(004000-)	Nut, Hex, Std, .38- 16	2
15	1013031	(004000-)	Isolator, Rbr	1
16	222496	(004000-)	Sleeve, P/M, 0.31b 0.50d 0.9l [430ss]	1
17	222505	(004000-)	Screw, Hex, M8 X 1.25 X 45, Ss	1
18	01685	(004000-)	Washer, Flat, 0.38b 0.88d .08, Ss	2
19	08713	(004000-)	Nut, Hex, Lock, M8 X 1.25, Nl, Ss	1
20	1071418	(004000-)	Shield, Tray, Drip [Mit 2013]	1
21	06943	(004000-)	Screw, Hex, M6 X 1.00 X 20, 8.8	3
22	32490	(004000-)	Washer, Flat, 0.25, Std	1
23	1071113	(004000-)	Bracket, Muffler	1
24	08165	(004000-)	Nut, Hex, Stover, M8	3
25	39349	(004000-)	Washer, Flat, 0.31, Sae	3

Fig. 32 - Mitsubishi Engine Radiator and Mount Group (004000-)

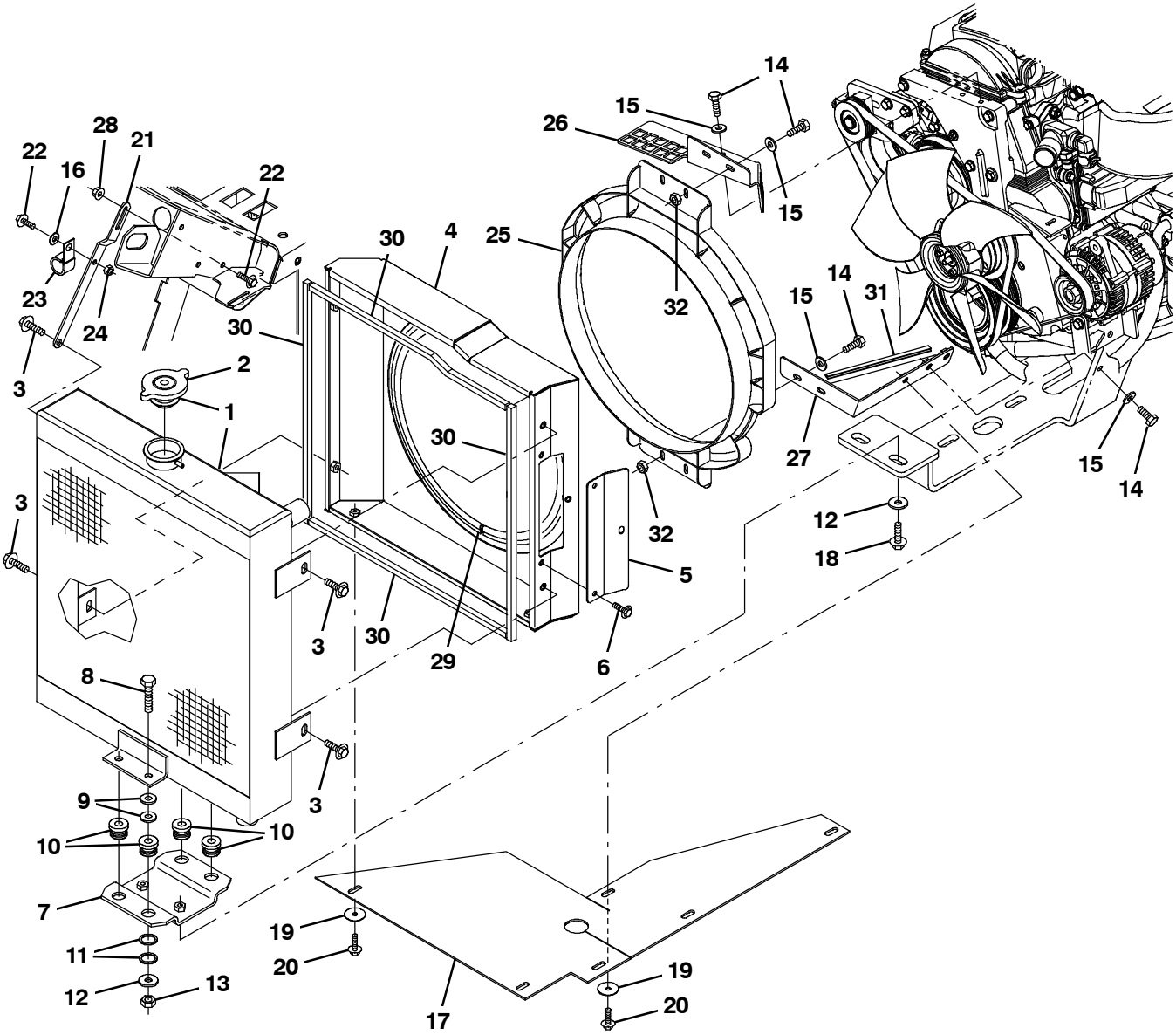

356299

Fig. 32 - Mitsubishi Engine Radiator and Mount Group (004000-)

	Ref.	Part No.	Serial Number	Description	Qty.
▽	1	1045940	(004000-)	Radiator, W/ Hyd Cooler [Side X Side]	1
▲	2	1045764	(004000-)	Cap, Radiator, 14Psi [Stant]	1
	3	1037346	(004000-)	Screw, Hex, M8 X 1.25 X 25, 9.8, Sems	4
	4	9010096	(004000-)	Shrd Wldt,Fan,G/Lp, Replmt [M20/M30/T20]	1
	4	9010097	(004000-)	Shrd Wldt,Fan,G/Lp, Replmt [TJ] (Japan Only)	1
	5	1070955	(004000-)	Plate, Door, Clean- Out [Mit2013]	1
	6	1036892	(004000-)	Screw, Hex, M6 X 1.00 X 25, 9.8 Sems	3
	7	1046962	(004000-)	Bracket, Mtg, Radiator	1
	8	06962	(004000-)	Screw, Hex, M10 X 1.50 X 45, 8.8	4
	9	32492	(004000-)	Washer, Flat, 0.38, Std	8
	10	54274	(004000-)	Isolator, Vib, Bshg, 1.1d 0.6l .4b 0.78h	4
	11	09832	(004000-)	Washer, Flat, 0.81b 1.06d .06, Stl	8
	12	1014563	(004000-)	Washer, Flat, 0.40b 1.12d .12, Ss	4
	13	41430	(004000-)	Nut, Hex, Lock, M10 X 1.5, Nl	4
	14	39277	(004000-)	Screw, Hex, M8 X 1.25 X 25, 8.8	8
	15	32491	(004000-)	Washer, Flat, 0.31, Std	11
	16	32490	(004000-)	Washer, Flat, 0.25, Std	2
	17	1071785	(004000-)	Skirt, Eng Fan, Gas / Lp	1
	18	1037355	(004000-)	Screw, Hex, M8 X 1.25 X 35, 9.8, Sems	2
	19	41178	(004000-)	Washer, Flat, 0.25, Fendr	7
	20	1036892	(004000-)	Screw, Hex, M6 X 1.00 X 25, 9.8 Sems	7
	21	1019968	(004000-)	Bracket, Mtg, Radiator	1
	22	1040467	(004000-)	Screw, Hex, M6 X 1.00 X 20, 9.8, Sems	2
	23	30407	(004000-)	Clip, Keeper, Open	1
	24	08708	(004000-)	Nut, Hex, Lock, M6 X 1.00, Nl	1
	25	1054428	(004000-)	Shroud, Fan	1
	26	1070434	(004000-)	Bracket, Shrd, Fan, Upper, Sppt, G/Lpg	1
	27	1070860	(004000-)	Bracket, Shrd, Fan, Lower, Sppt, G/Lpg	1
	28	07790	(004000-)	Nut, Hex, Flng, M6 X 1.00	1
	29	1048166	(004000-)	Seal, Afmkt, Bulb, Str, 0.58d 08ft	1
	30	1015205	(004000-)	Seal, Afmkt, Ure, Adh, 0.38, 0.38w 02ft	4
	31	57569	(004000-)	Molding, Trim, Pvc, .08- .11 06.8l	1
	32	08709	(004000-)	Nut, Hex, Lock, M8 X 1.25, Nl	4

Fig. 33 - Mitsubishi Engine Radiator Hose Group (004000-)

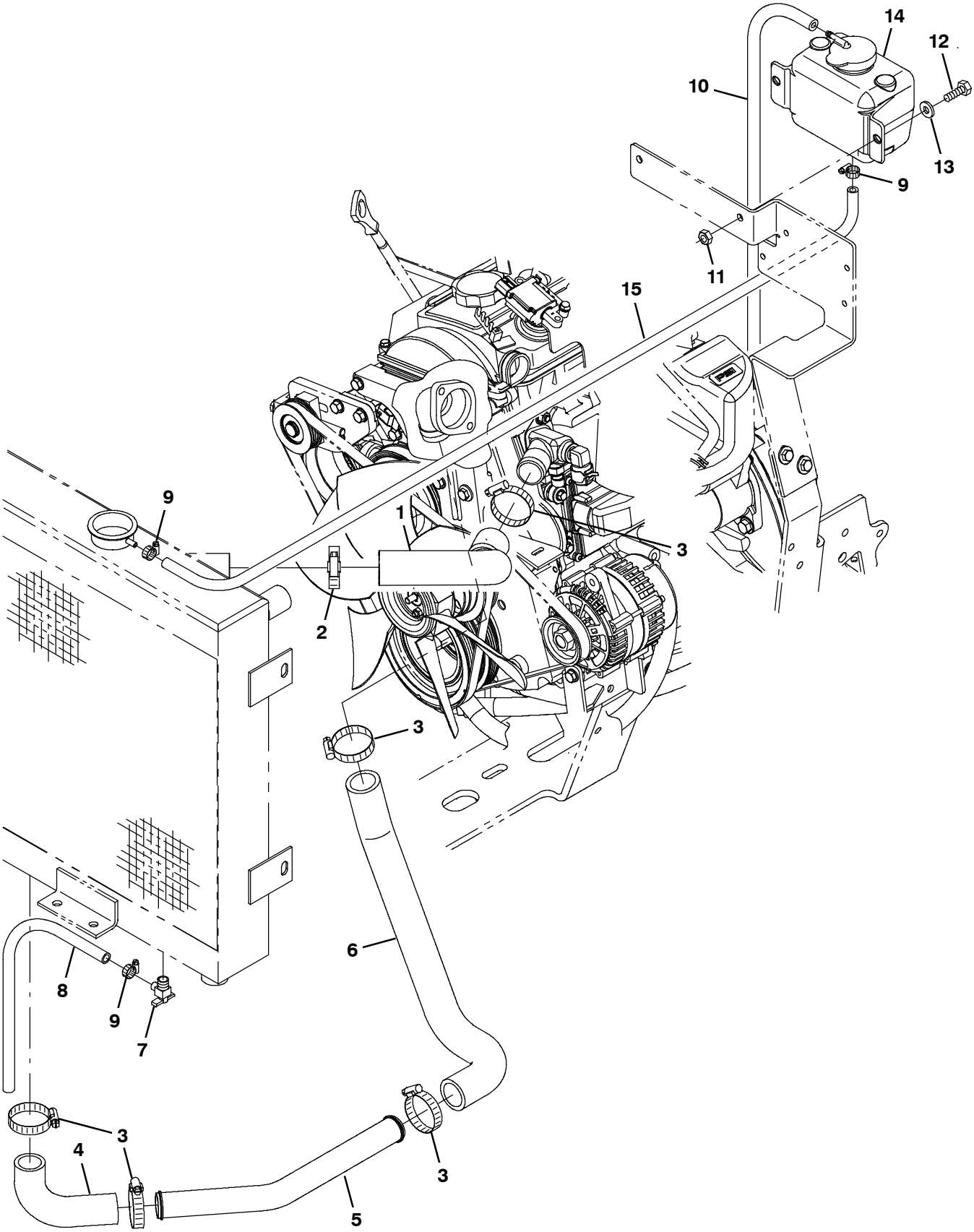

356300

Fig. 33 - Mitsubishi Engine Radiator Hose Group (004000-)

Ref.	Part No.	Serial Number	Description	Qty.
1	1070732	(004000-)	Hose, Coolant, Mold, 1.25id To 1.62id	1
2	22297	(004000-)	Clamp, Hose, Wormdrive, 1.56- 2.50d, .50w	1
3	79381	(004000-)	Clamp, Hose, Wormdrive, 1.25- 2.00d, .50w	5
4	1007482	(004000-)	Hose, Rbr, E90, 1.25id 1.25id 04.2 03.1	1
5	1071099	(004000-)	Tube, Coolant, 1.3d, Lower [Mit 2013]	1
6	9010904	(004000-)	Hose Kit, Coolant, Replmt [Mitsubishi}	1
7	51305	(004000-)	Fitting, Draincock, E90, .25npt	1
8	73471	(004000-)	Hose, Pvc, Clr, 0.38id 0.56od 022.0l	1
9	43844	(004000-)	Clamp, Hose, Wormdrive, 0.25- 0.62d, .31w	3
10	87738	(004000-)	Hose, Fuel, 0.18id, 29.0l	1
11	08709	(004000-)	Nut, Hex, Lock, M8 X 1.25, Nl	2
12	16931	(004000-)	Screw, Hex, M8 X 1.25 X 20, 8.8	2
13	32491	(004000-)	Washer, Flat, 0.31, Std	2
14	1054382	(004000-)	Tank, Coolant, 03.6w 04.1hi 05.5l,1liter	1
15	1014843	(004000-)	Hose, Afmkt, Coolant Recvy, 05ft	1

Fig. 34 - Engine Fuel Tank Group, Gasoline

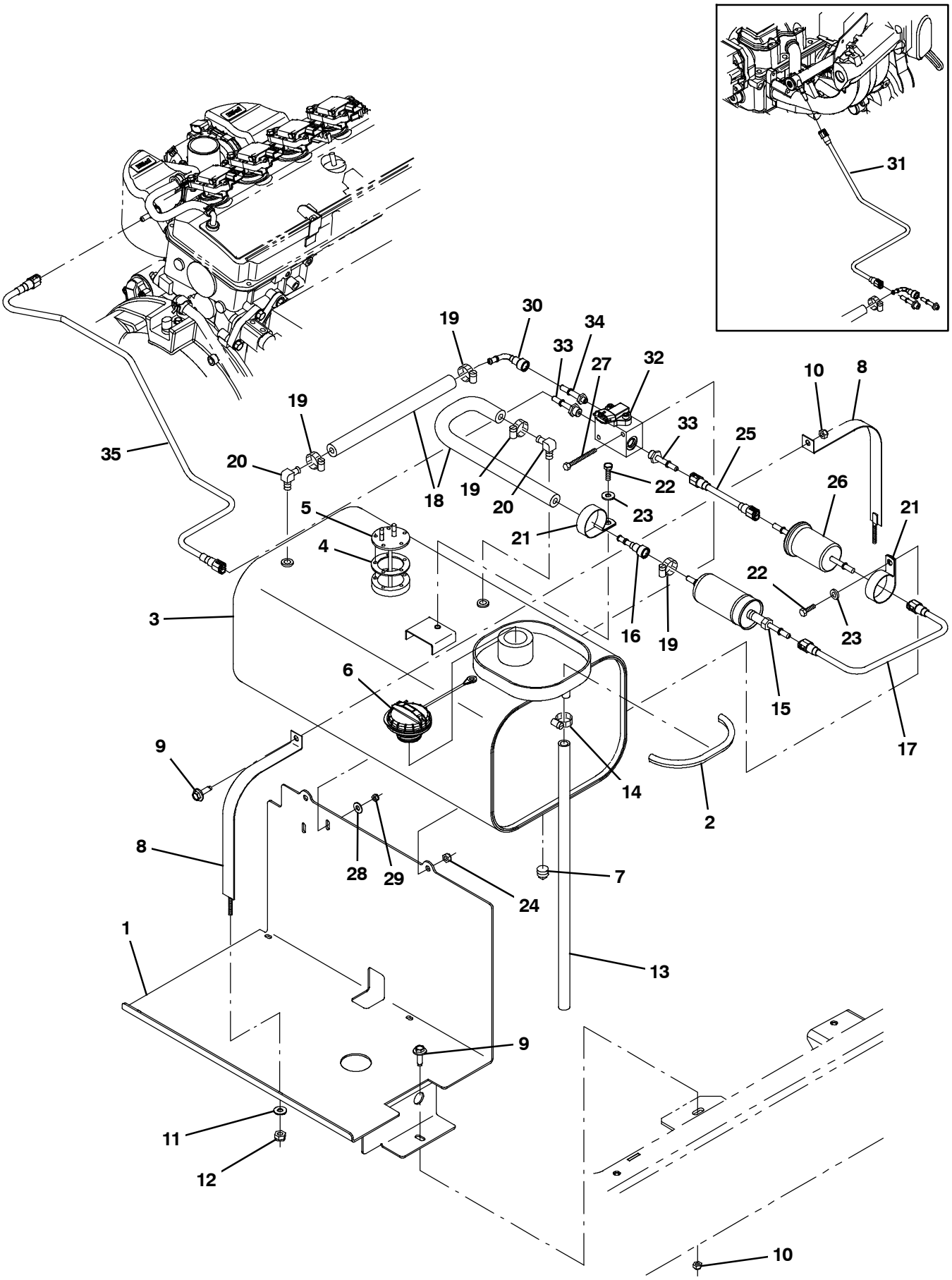

354634 - M30

Fig. 34 - Engine Fuel Tank Group, Gasoline

	Ref.	Part No.	Serial Number	Description	Qty.
	1	1035796	(000000-)	Tray Wldt, Fuel	1
	2	62595-15	(000000-)	Molding, Trim, Pvc, .08-.11 13.2l	1
▽	3	9003610	(000000-)	Tank, Fuel, 11.2gal, Gas, Replmt [2007]	1
▲	4	1033897	(000000-)	Gasket, Sender, Fuel	1
▲	5	1033901	(000000-)	Send-Unit, Fuel [2007]	1
▲	6	1032812	(000000-)	Cap, Fuel, Tank	1
▲	7	48126	(000000-)	Fitting, Pipe, Plug, Pm02, Sq Head	1
	8	1025229	(000000-)	Strap, Tank, Gas	2
	9	1037354	(000000-)	Screw, Hex, M8 X 1.25 X 30, 9.8, Sems	3
	10	08709	(000000-)	Nut, Hex, Lock, M8 X 1.25, Nl	3
	11	32483	(000000-)	Washer, Flat, 0.25, Sae	2
	12	32981	(000000-)	Nut, Hex, Lock, .25-20, Nl	2
	13	1023482	(000000-)	Hose, Fuel, 0.50id, 21.0l	1
	14	54333	(000000-)	Clamp, Hose, Wormdrive, 0.31-0.88d, .31w	1
	15	1011107	(000000-)	Pump, Fuel, Hi Press [Gm 1.6l/3.0l]	1
	16	1013086	(000000-)	Connector, Fuel, Qf	1
	17	1034676	(000000-)	Fuelline, .31d Str/Str,Plstc	1
	18	1033746	(000000-)	Hose, Fuel, 0.31id [Evap Emission 07]	2
	19	43844	(000000-)	Clamp, Hose, Wormdrive, 0.25-0.62d, .31w	4
	20	9000355	(000000-)	Fitting, Brs, E90, Em05/Pm04	2
	21	1011895	(000000-)	Clamp, Cable, Stl, 2.00d X 0.75w, 1hole	2
	22	16931	(000000-)	Screw, Hex, M8 X 1.25 X 20, 8.8	2
	23	32491	(000000-)	Washer, Flat, 0.31, Std	2
	24	08709	(000000-)	Nut, Hex, Lock, M8 X 1.25, Nl	1
	25	1012248	(000000-)	Fuelline, .31d Str/Str, Plstc	1
	26	372440	(000000-)	Filter, Fuel [Gm 1.6l/3.0l]	1
	27	06949	(000000-)	Screw, Hex, M6 X 1.00 X 50, 8.8	2
	28	32483	(000000-)	Washer, Flat, 0.25, Sae	2
	29	08708	(000000-)	Nut, Hex, Lock, M6 X 1.00, Nl	2
	30	1019939	(000000-)	Connector, Fuel, E90, Qf	1
	31	1036967	(000000-003999)	Fuelline, .31d Str/Str,Plstc	1
	32	1028924	(000000-)	Manifold, Gas, Relief, Valve	1
	33	1029293	(000000-)	Fitting, Fuel, Str, 0.56-18 [07 Eng]	2
	34	1029295	(000000-)	Fitting, Fuel, Str, 0.38-24 [07 Eng]	1
	35	1071388	(004000-)	Fuelline, .31d Str/Str, Plstc [Mit 2013]	1

Fig. 35 - Engine Fuel Tank Group, LPG

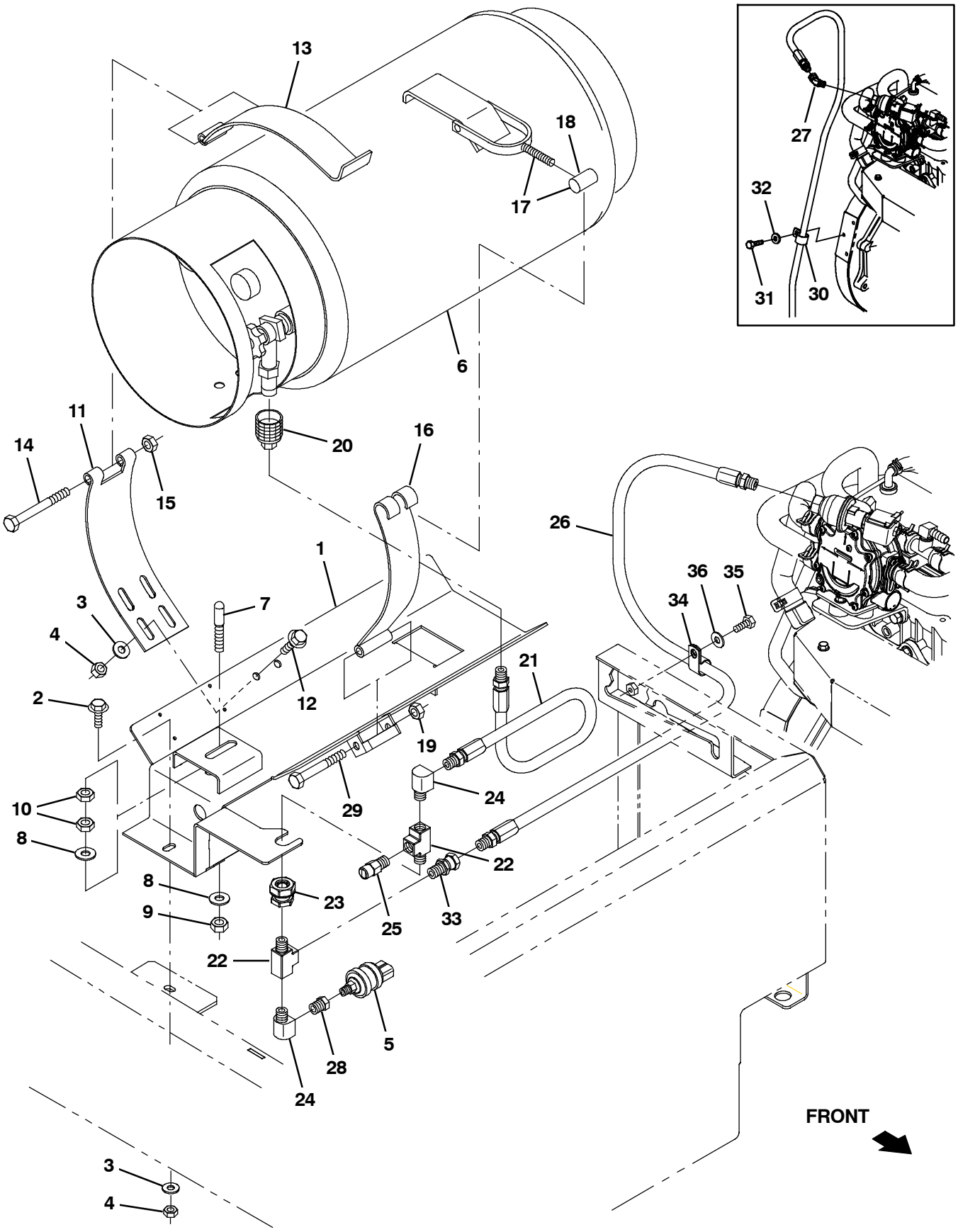

354635 - M30

Fig. 35 - Engine Fuel Tank Group, LPG

	Ref.	Part No.	Serial Number	Description	Qty.
	1	1035677	(000000-)	Tray Wldt, Lpg	1
	2	1037354	(000000-)	Screw, Hex, M8 X 1.25 X 30, 9.8, Sems	2
	3	32491	(000000-)	Washer, Flat, 0.31, Std	4
	4	08709	(000000-)	Nut, Hex, Lock, M8 X 1.25, Nl	4
	5	23156	(000000-)	Switch, Press, 0070psi Spst Nc 12vdc 08a	1
	6	24928-1	(000000-)	Tank, Lpg, 33lb, W/ Gauge [Empty, Liq]	1
	7	1024934	(000000-)	Pin, Locating, Lpg	1
	8	32492	(000000-)	Washer, Flat, 0.38, Std	2
	9	41430	(000000-)	Nut, Hex, Lock, M10 X 1.5, Nl	1
	10	32716	(000000-)	Nut, Hex, Jam, M10 X 1.5, Ss	2
	11	58589	(000000-)	Strap, Mtg, Tank, Lpg	1
	12	1037346	(000000-)	Screw, Hex, M8 X 1.25 X 25, 9.8, Sems	2
	13	57297	(000000-)	Strap, Mtg, Tank, Lpg, Hinge	1
	14	35710	(000000-)	Screw, Hex, .38-16 X 3.75, G5	1
	15	59156	(000000-)	Nut, Hex, Lock, .38-16, Nl, Ss	1
	16	58590	(000000-)	Strap, Mtg, Tank, Lpg	1
▽	17	53400-1	(000000-)	Latch Assy, Mtg, Tank, Lpg, W/Nut	1
▲	18	53400-4	(000000-)	Nut, Adj, Mtg, Tank, Lpg	1
	19	36643	(000000-)	Nut, Hex, Lock, .38-16, Nl, Thin	1
	20	26496	(000000-)	Fitting, Brs, Qdc, Pf04, Lpg Fem	1
	21	22308-6	(000000-)	Hose, Lpg, Med05, Pm04str/Sm04str, 014.0	1
	22	150709	(000000-)	Fitting, Brs, Tee, Pf04/Pf04/Pm04, Run	2
	23	78122	(000000-)	Fitting, Brs, Str, Pf04/Pf04, Bh	1
	24	27048	(000000-)	Fitting, Brs, E90, Pf04/Pm04	2
	25	24047	(000000-)	Valve, Lpg, Press Relief [Rego]	1
	26	19760	(000000-)	Hose, Lpg, Med05, Pm04str/Sm04str, 055.0	1
	27	392645	(000000-004559)	Fitting, Pipe, E45, Spcl	1
	28	17414	(000000-)	Fitting, Hyd, Str, Pf02/Pm04	1
	29	35707	(000000-)	Screw, Hex, .38-16 X 3.00, G5	1
	30	69234	(004000-004559)	Clamp, Cable, Stl, 1.00d X 0.75w, 1hole	1
	31	09740	(004000-004559)	Screw, Hex, M8 X 1.25 X 20, Ss	1
	32	32491	(004000-004559)	Washer, Flat, 0.31, Std	1
	33	11442-23	(004560)	Fitting, Pipe, Str, Pm04/Sf04	1
	34	67767	(004560-)	Clamp, Cable, Stl, 0.69d X 0.62w, 1hole	1
	35	06942	(004560-)	Screw, Hex, M6 X 1.00 X 16, 8.8	1
	36	32483	(004560-)	Washer, Flat, 0.25, Sae	1

Fig. 36 - Battery and Electrical Group

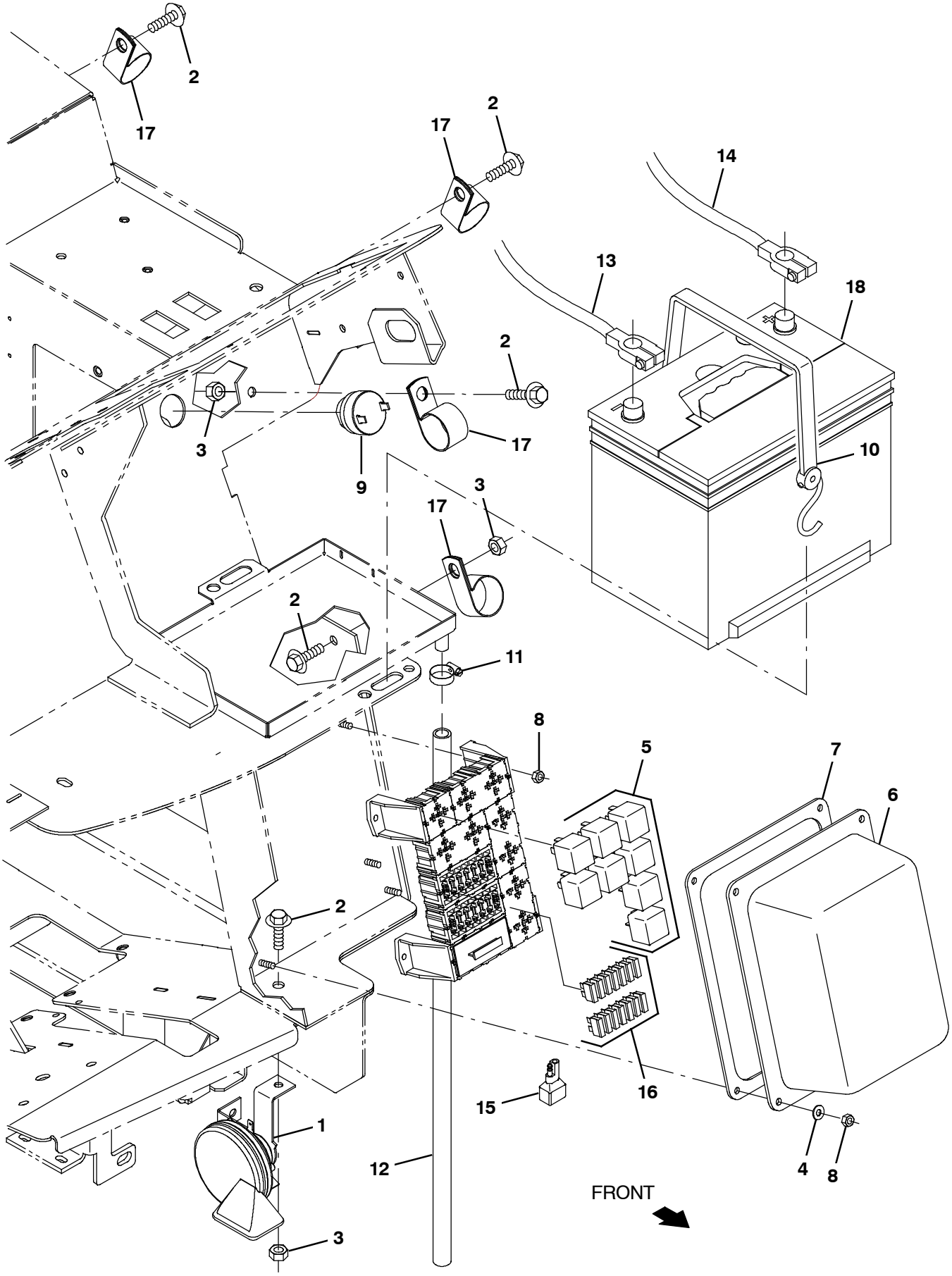

354606, G/LP

Fig. 36 - Battery and Electrical Group

Ref.	Part No.	Serial Number	Description	Qty.
1	369704	(000000-)	Horn, 12vdc, Dba [Wolo]	1
2	1037346	(000000-)	Screw, Hex, M8 X 1.25 X 25, 9.8, Sems	5
3	08709	(000000-)	Nut, Hex, Lock, M8 X 1.25, Nl	1
4	19066	(000000-)	Washer, Flat, 10	4
5	57804	(000000-)	Relay, 12vdc, 040a, Spdt No	8
6	1024274	(000000-)	Cover, Fuse, Block	1
7	1026576	(000000-)	Gasket, .13, 07.68w 09.45l, Adh [Poron]	1
8	06549	(000000-)	Nut, Hex, Lock, M5 X 0.80, Nl	8
9	1021290	(000000-)	Alarm, Warning [Sonalert, St628]	1
10	33671	(000000-)	Strap, Rbr, Tie- Down, 19.0l, 2/ Hook	1
11	54333	(000000-)	Clamp, Hose, Wormdrive, 0.31- 0.88d, .31w	1
12	20778	(000000-)	Hose, Pvc, Clr, 0.50id 0.69od 030.0l	1
13	60295	(000000- 003999)	Cable, Battery, 02ga 60.0l Blk .41ring	1
13	1071481	(004000-)	Cable, Battery, 2ga, 62l, Blk	1
14	68869	(000000- 003999)	Cable, Battery, 02ga 48.0l Red .41ring	1
14	1071482	(004000-)	Cable, Battery, 2ga, 60l, Red	1
15	222290	(000000-)	Diode, Ele, Plug	1
16	762514	(000000-)	Fuse, Blade, 15a, 32vdc	14
17	53466	(000000-)	Clamp, Cable, Stl, 1.50d X 1.00w, 1hole	4
18	08709	(000000-)	Nut, Hex, Lock, M8 X 1.25, Nl	2
19	10137	(000000-)	Battery, Wet, 12vdc 0475cca	1

Fig. 37 - Wheel Group, Front Drive

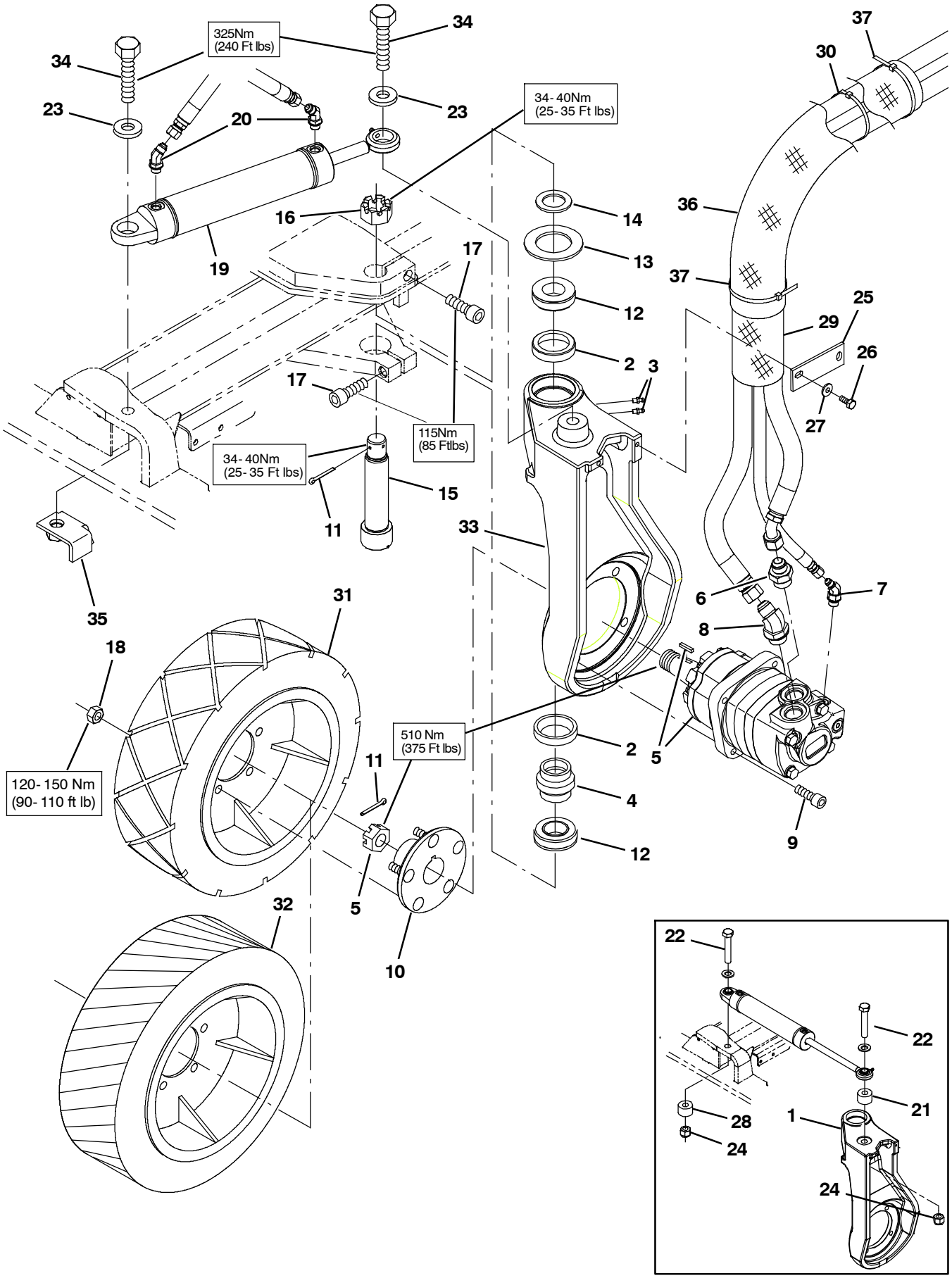

354607- M30

Fig. 37 - Wheel Group, Front Drive

	Ref.	Part No.	Serial Number	Description	Qty.
	1	9008248	(000000- 001653)	Housing Kit, Drive, Front, Replmt	1
	2	51338	(000000-)	Bearing, Cup, 2.56d 0.55w	2
	3	47801	(000000-)	Fitting, Grease, Str Pm04 .63l	2
	4	374560	(000000-)	Seal, Drive, Rear, Grease Cav	1
	5	379609	(000000-)	Motor, Hyd, Gear, Int 19.0 Bi- Dir 3000 (See Breakdowns)	1
	6	42223	(000000-)	Fitting, Hyd, Str, Jm10/Om12	1
	7	393215	(000000-)	Fitting, Hyd, E45, Jm04/Om06	1
	8	1024249	(000000-)	Fitting, Hyd, E45, Jm10/Om12	1
	9	19583	(000000-)	Screw, Soc, .50- 13 X 1.50, Al	4
▽	10	54087	(000000-)	Hub Assy, Wheel, 5 Bolt 4.50bc Taper B	1
▲		32126	(000000-)	Stud, Wheel, .50- 20 X 1.50l, 0.370th	5
	11	08180	(000000-)	Pin, Cotter, .125 X 2.00	2
	12	51339	(000000-)	Bearing, Cone, 1.38b 0.71w	2
	13	374563	(000000-)	Washer, Flat, 2.16b 3.50d .16, Felt	1
	14	54051	(000000-)	Washer, Flat, 1.39b 2.12d .13, Stl	1
	15	73281	(000000-)	Bolt, Shld, 1.37d X 5.13l,1.1- 18 Drilled	1
	16	54052	(000000-)	Nut, Hex, Sltd, 1.12- 18	1
	17	72926	(000000-)	Screw, Soc, M16 X 2.0 X 50, 12.9	2
	18	24339	(000000-)	Nut, Wheel, .50- 20 X 60 Angle	5
	19	1017903	(000000- 004454)	Cylinder, Hyd, 2.0b,15.2l,09.00strk,3000	1
	19	1034270	(004455-)	Cylinder, Hyd, 2.0b,15.2l,09.00strk,3000	1
	20	47522	(000000-)	Fitting, Hyd, E45, Jm06/Om06	2
	21	71340	(000000- 001653)	Tube, Rnd, 1.75d 0.77b 01.1l, Stl, Pntd	1
	22	71341	(000000- 001653)	Screw, Hex, .75- 10 X 4.00, 5	2
	23	39350	(000000- 004454)	Washer, Flat, 0.75 Sae	2
	23	1073487	(004455-)	Washer, Flat, .781b 1.63od .16, Stl, Blk	2
	24	32987	(000000- 001653)	Nut, Hex, Lock, .75- 10, Nl	2
	25	58842	(000000-)	Bar, Flat, Stl 0.19, 01.50 X 04.1l	1
	26	16931	(000000-)	Screw, Hex, M8 X 1.25 X 20, 8.8	2
	27	32491	(000000-)	Washer, Flat, 0.31, Std	2
	28	1034806	(000000-)	Tube, 0.77id 1.75od 00.7l, Stl, Pntd	1
	29	57315	(000000-)	Sleeve, Nyl, #37 05.0l	2
	30	49266	(000000-)	Tie, Cable, Nyl, 07.3l .19w 1.8 Max D	1
	31	1059343	(000000-)	Tire, Drive, Scrbr, Non- Skid, 18.0X6.0	1
	32	1061973	(000000-)	Tire, Drive, Scrbr, Pu, Grey, 18.0X6.0 (Optional Polyurethane)	1
	33	1071061	(001654-)	Housing, Sppt, Front Wheel	1
	34	77345	(001654-)	Screw, Hex, .75- 10 X 3.25, G5	2
	35	1060521	(001654-)	Bracket, Mtg, Sppt	1
	36	82832	(004000-)	Sleeve, Nyl, 2.38id 25.0l	1
	37	49266	(004000-)	Tie, Cable, Nyl, 07.3l .19w 1.8 Max D	2

Fig. 38 - Wheel and Brake Group

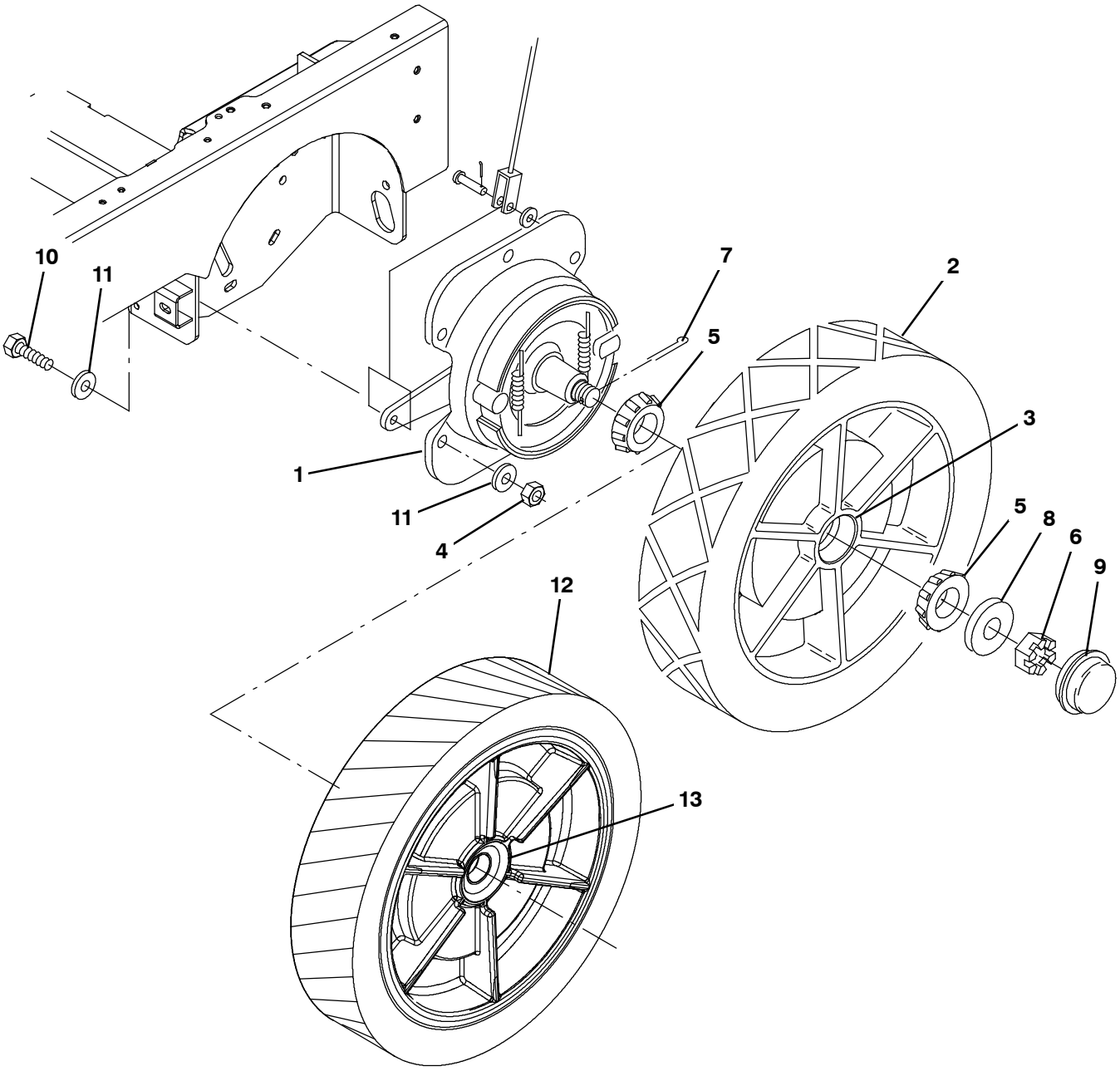

354608

Fig. 38 - Wheel and Brake Group

	Ref.	Part No.	Serial Number	Description	Qty.
▽	1	54577	(000000-)	Brake Assy, Drum, Mech, 07.9d [6600]]	2
▲		66211	(000000-)	Shoe Set, Brake [1 Set=1pkg=2 Shoes]	2
▲▽		66213	(000000-)	Brake Kit, Repair	1
▲▲		70161	(000000-)	Shaft	1
▲		70158	(000000-)	Spring	2
▽	2	1059544	(000000-)	Tire Assy, Solid, 18.0 X 5.0, Idler (Standard)	2
▲	3	51338	(000000-)	Bearing, Cup, 2.56d 0.55w	2
▽	2	1059344	(000000-)	Tire Assy, Solid, 18.0 X 5.0,Hi Traction (Option)	2
▲	3	51338	(000000-)	Bearing, Cup, 2.56d 0.55w	2
▽	2	1059545	(000000-)	Tire Assy, Solid, 18.0X5.0, Non- Marking (Option)	2
▲	3	51338	(000000-)	Bearing, Cup, 2.56d 0.55w	2
	4	08711	(000000-)	Nut, Hex, Lock, M12 X 1.75, Nl	12
	5	51339	(000000-)	Bearing, Cone, 1.38b 0.71w	4
	6	14242	(000000-)	Nut, Hex, Sltd, 1.00- 20	2
	7	08202	(000000-)	Pin, Cotter, .125 X 1.75	2
	8	32969	(000000-)	Washer, Flat, 1.00, Sae	2
	9	54390	(000000-)	Cap, Hub, Dust, 2.57d 0.77l	2
	10	06969	(000000-)	Screw, Hex, M12 X 1.75 X 40, 8.8	12
	11	32486	(000000-)	Washer, Flat, 0.50, Sae	24
▽	12	1062102	(000000-)	Tire, Idler, Scrbr, Pu, Grey, 18.0X5.0 (Polyurethane)	2
▲	13	51338	(000000-)	Bearing, Cup, 2.56d 0.55w	2

Fig. 39 - Brake Pedal Linkage Group

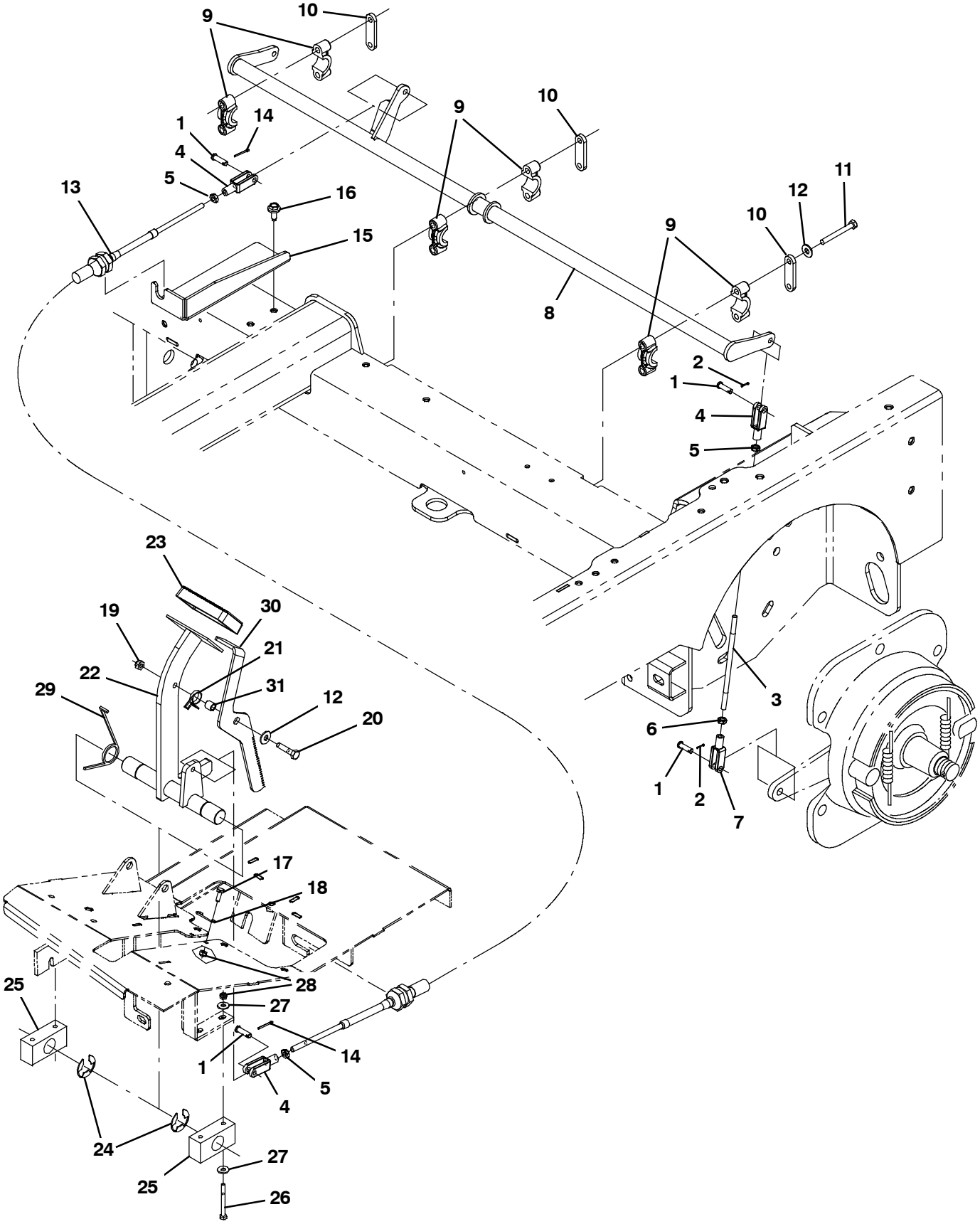

354609

Fig. 39 - Brake Pedal Linkage Group

Ref.	Part No.	Serial Number	Description	Qty.
1	69582	(000000-)	Pin, Clevis, 0.31d X 1.00l	6
2	08170	(000000-)	Pin, Cotter, .062 X 0.50	4
3	1034409	(000000-)	Rod, Thrd, 2 End, .31- 24 7.0l, Pl	2
4	58311	(000000-)	Clevis, Adj, 0.31pin, 0.31- 24	4
5	20170	(000000-)	Nut, Hex, Jam, .31- 24	4
6	381910	(000000-)	Nut, Hex, Jam, .31- 24, Lh	2
7	1037933	(000000-)	Clevis, Adj, 0.31pin, 0.31- 24, Lh	2
8	1033812	(000000-)	Shaft Wldt, Brake	1
9	381502	(000000-)	Bearing, Split, 1.00b	6
10	382224	(000000-)	Plate, Sppt	3
11	39279	(000000-)	Screw, Hex, M8 X 1.25 X 70, 8.8	6
12	32491	(000000-)	Washer, Flat, 0.31, Std	7
13	1034454	(000000-)	Cable, Push / Pull, 068.0l	1
14	08179	(000000-)	Pin, Cotter, .094 X 1.00	2
15	1022736	(000000-)	Bracket, Mtg, Cable	1
16	1037346	(000000-)	Screw, Hex, M8 X 1.25 X 25, 9.8, Sems	2
17	06942	(000000-)	Screw, Hex, M6 X 1.00 X 16, 8.8	2
18	71367	(000000-)	Spring, Wir, 0.08d, Parking Brake	1
19	08709	(000000-)	Nut, Hex, Lock, M8 X 1.25, Nl	1
20	06955	(000000-)	Screw, Hex, M8 X 1.25 X 35, 8.8	1
21	59009	(000000-)	Spring, Tors, 0.75id .06wir 02.8coil	1
22	1022243	(000000-)	Shaft Wldt, Pedal, Brake	1
23	51109	(000000-)	Pad, Pedal, Brake, 3.96l 2.36w 0.75	1
24	23788	(000000-)	Ring, Retaining, Ext, 0.98d, [E- Ring]	2
25	86751	(000000-)	Bearing, Pillowblock, 1.02b [Solid Pye]	2
26	06548	(000000-)	Screw, Hex, M6 X 1.00 X 60, 8.8	4
27	32490	(000000-)	Washer, Flat, 0.25, Std	8
28	08708	(000000-)	Nut, Hex, Lock, M6 X 1.00, Nl	6
29	54607	(000000-)	Spring, Tors, 1.13id .12wir 2.3coil, Rh	2
30	1025487	(000000-)	Pedal, Brake, Lock	1
31	46563	(000000-)	Bushing, Sleeve, 0.37b 0.50d 0.50l, Oib	1

Fig. 40 - Directional Pedal Group

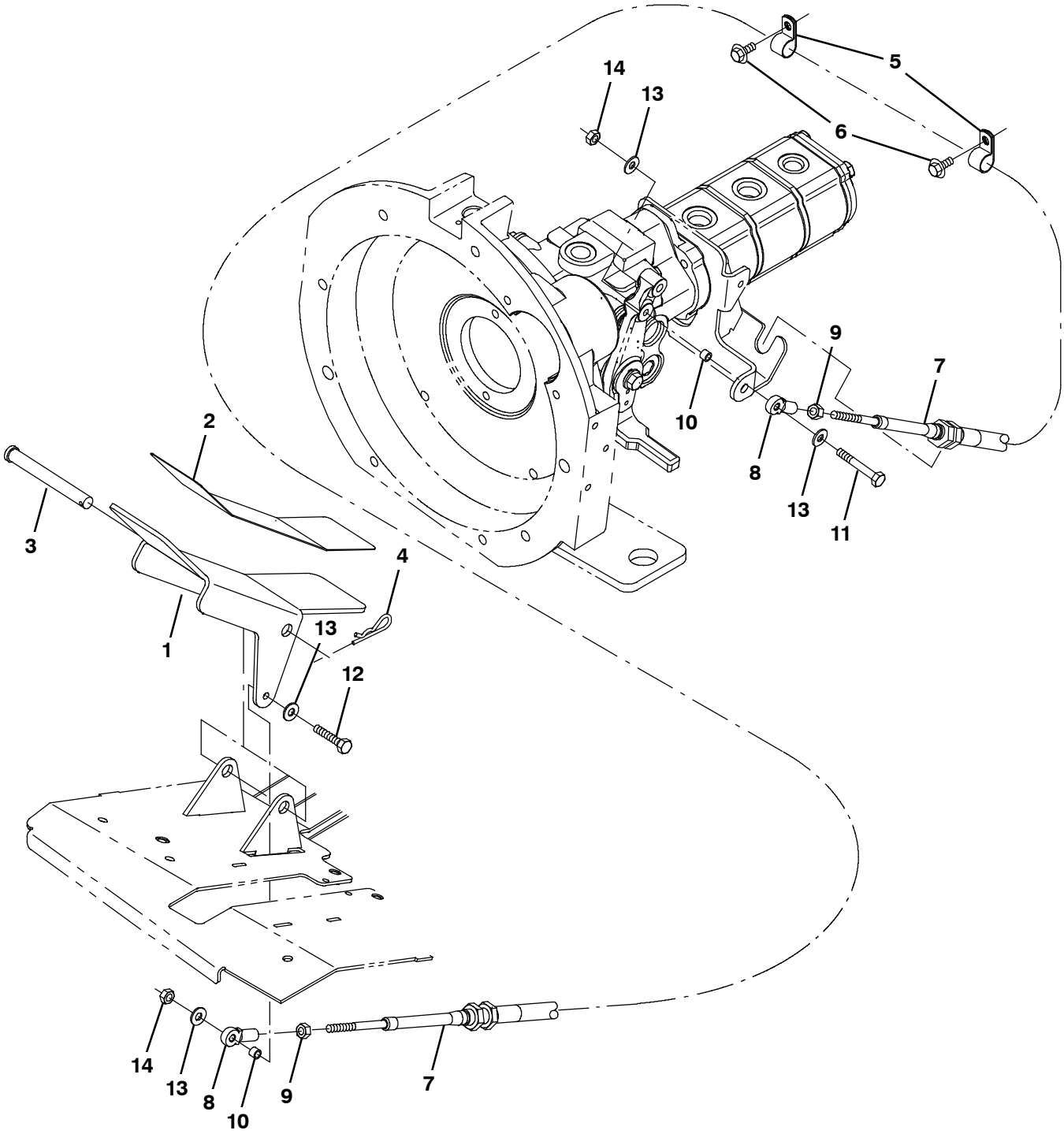

354429

Fig. 40 - Directional Pedal Group

Ref.	Part No.	Serial Number	Description	Qty.
1	1025140	(000000-)	Pedal, Propel	1
2	58819	(000000-)	Tread, Non- Skid, 03.0w 11.6l	1
3	59668	(000000-)	Pin, Clevis, 0.50 D X 4.50l	1
4	08182	(000000-)	Pin, Cotter, .125 X 1.00	1
5	67767	(000000-)	Clamp, Cable, Stl, 0.69d X 0.62w, 1h	2
6	361339	(000000-)	Screw, Hex, M6 X 1.0 X 16, Fmg	2
7	1022345	(000000-)	Cable, Push / Pull, 098.0l .25- 28/.25- 28	1
8	68866	(000000-)	Rod- End, .25- 28rh Fem 0.25b [Teflon]	2
9	01714	(000000-)	Nut, Hex, Std, .25- 28	2
10	65441	(000000-)	Tube, 00.38d 00.26b 00.3l Stl Plt	2
11	41399	(000000-)	Screw, Hex, .25- 20 X 2.25, Ss	1
12	42180	(000000-)	Screw, Hex, .25- 20 X 1.75, Ss	1
13	32490	(000000-)	Washer, Flat, 0.25 Std	4
14	41169	(000000-)	Nut, Hex, Lock, .25- 20, Nl, Ss	2

Fig. 41 - Hydraulic Pump Linkage Group

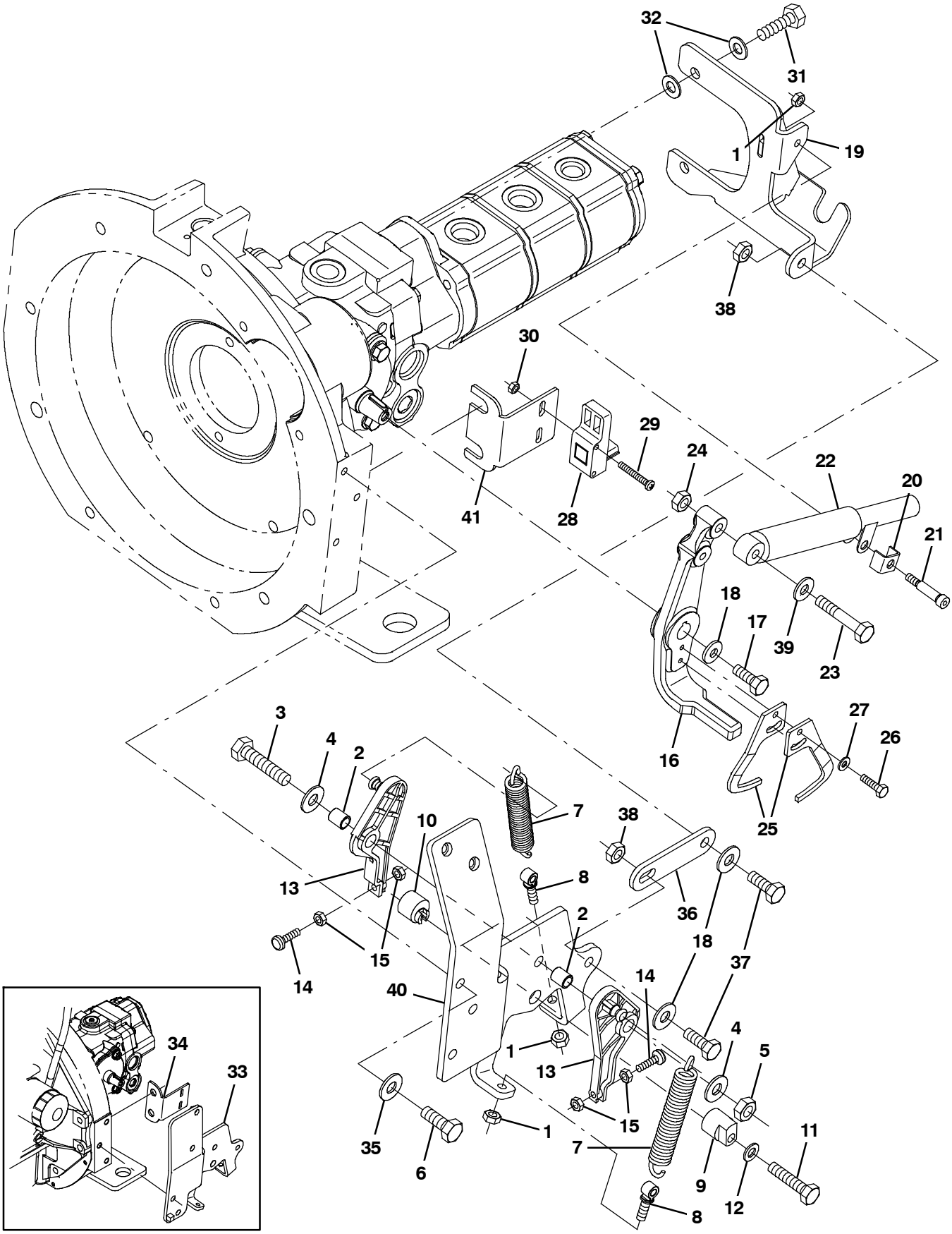

356301- G/LP

Fig. 41 - Hydraulic Pump Linkage Group

Ref.	Part No.	Serial Number	Description	Qty.
1	41169	(000000-)	Nut, Hex, Lock, .25- 20, Nl, Ss	3
2	63234	(000000-)	Tube, 00.50d 00.38b 00.6l Stl	2
3	42467	(000000-)	Screw, Hex, .38- 16 X 2.00, Ss	1
4	32492	(000000-)	Washer, Flat, 0.38 Std	2
5	36643	(000000-)	Nut, Hex, Lock, .38- 16, Nl, Thin	1
6	21197	(000000-)	Screw, Hex, .38- 16 X 1.00, 5	2
7	11842	(000000-)	Spring, Extn, 0.75od X 0.12wir, 4.3l	2
8	48079	(000000-)	Bolt, Eye, .25- 20 X 1.40 X .25 Eye	1
9	53947	(000000-)	Cam, Centering, Pintle	1
10	54655	(000000-)	Cam, Centering, Pintle	1
11	74440	(000000-)	Screw, Hex, M8 X 1.25 X 40, Ss, Nl	1
12	39349	(000000-)	Washer, Flat, 0.31 Sae	1
13	53953	(000000-)	Arm, Cntrl, Pintle, Centering	2
14	54205	(000000-)	Bumper, Rbr, 0.5d 0.16t M5 X 08	2
15	50335	(000000-)	Nut, Hex, Std, M5 X 0.8, 8	4
16	1027233	(000000-)	Arm, Pintle	1
17	83879	(000000-)	Screw, Hex, .31- 24 X 0.75, Nl	1
18	41186	(000000-)	Washer, Belleville, .31	3
19	1027313	(000000-)	Bracket Wldt, Propel, Pintle	1
20	84170	(000000-)	Bracket, Retainer, Safety	1
21	16213	(000000-)	Bolt, Shld, .31d X 1.00, .25- 20	1
22	73411	(000000-)	Shock Absorber, 2.3 Strk	1
23	39278	(000000-)	Screw, Hex, M8 X 1.25 X 50, 8.8	1
24	08709	(000000-)	Nut, Hex, Lock, M8 X 1.25, Nl	1
25	1022787	(000000-)	Arm [Positioning]	2
26	09252	(000000-)	Screw, Hex, M5 X 0.8 X 20, 8.8	2
27	01683	(000000-)	Washer, Flat, #10 Ss	2
28	1022779	(000000-)	Sensor, Spd / Dir, 6- 30vdc	1
29	09198	(000000-)	Screw, Pan, M4 X 0.7 X 35, Ss	2
30	33932	(000000-)	Nut, Hex, Lock, M4 X 0.7, Nl, Ss	2
31	46559	(000000-)	Screw, Hex, .38- 16 X 1.25, Nl	2
32	32485	(000000-)	Washer, Flat, 0.38 Sae	4
33	1022140	(000000- 005999)	Bracket, Propel, Gas/Lpg	1
34	1022798	(000000- 005999)	Bracket, Mtg, Cyl	1
35	41187	(000000-)	Washer, Flat, Belleville, .38	2
36	1032399	(000000-)	Strap, Sppt	1
37	09010	(000000-)	Screw, Hex, M8 X 1.25 X 25, Ss	2
38	08713	(000000-)	Nut, Hex, Lock, M8 X 1.25, Nl, Ss	2
39	32490	(000000-)	Washer, Flat, 0.25 Std	1
40	1070798	(006000-)	Bracket, Propel, G/Lpg [Mit 2013]	1
41	1070819	(006000-)	Angle, Mtg	1

Fig. 42 - Hopper Lift Arms Group

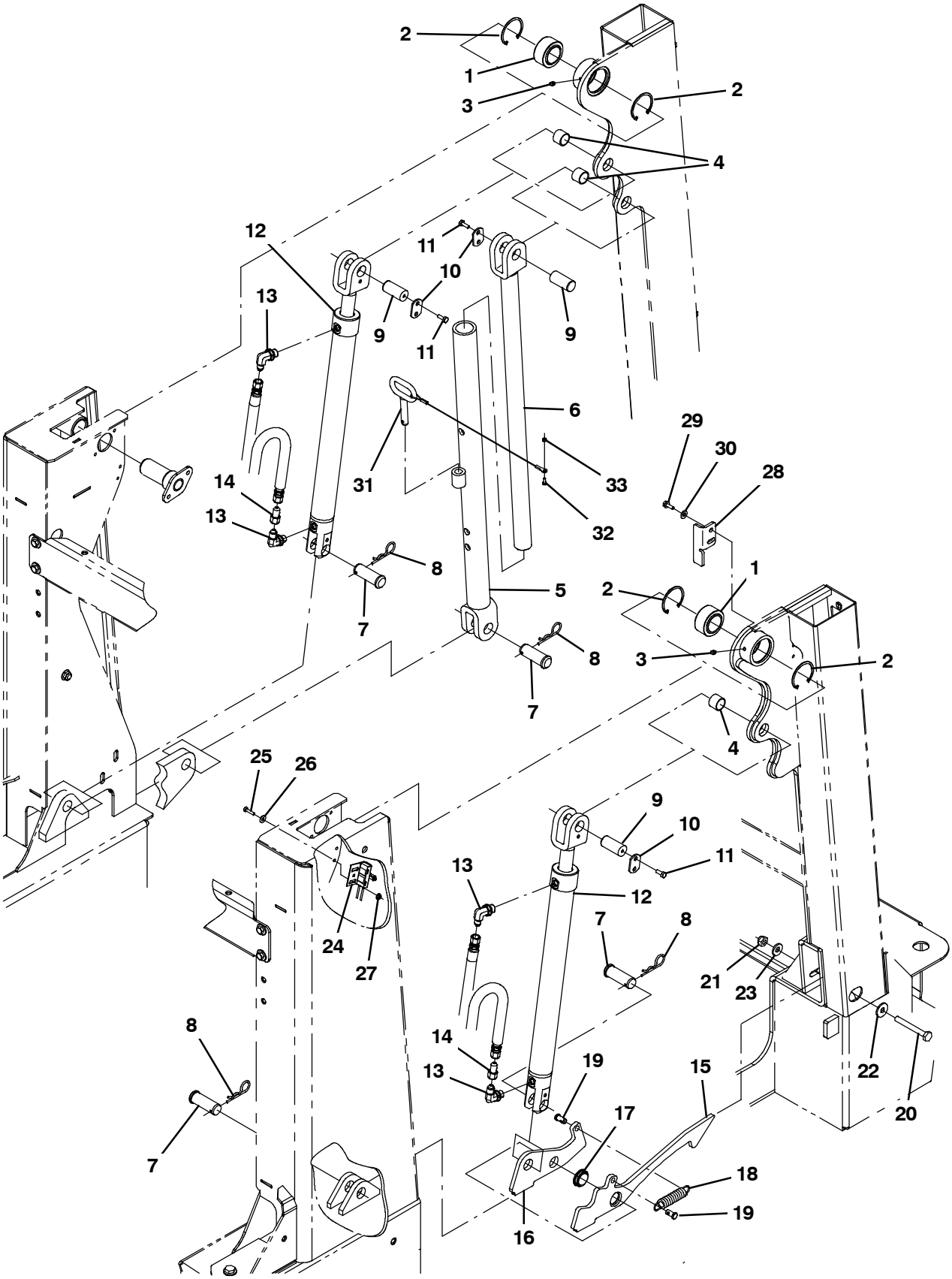

354610

Fig. 42 - Hopper Lift Arms Group

Ref.	Part No.	Serial Number	Description	Qty.
1	42120- 1	(000000-)	Bearing, Self Align, 1.25b 2.00d	2
2	59542	(000000-)	Ring, Retaining, Int, 2.00d	4
3	07259	(000000-)	Fitting, Grease, Str Pm04 .47l	2
4	364587	(000000-)	Bushing, Sleeve, 0.88b 1.00d 0.75l, Bnz	3
5	1040818	(000000-)	Tube Wldt, Arm, Safety	1
6	1040820	(000000-)	Rod Wldt, Arm, Safety	1
7	1018227	(000000-)	Pin, Clevis, 0.88d X 2.25l	4
8	02942	(000000-)	Pin, Cotter, Hair, 0.62d .120 Wir	4
9	1018226	(000000-)	Pin, 0.87d 01.8l, 1/M6 X 1.0, 1cham,Stl	3
10	72897	(000000-)	Plate, Pin, Clevis, Upper	3
11	06942	(000000-)	Screw, Hex, M6 X 1.00 X 16, 8.8	6
12	1029646	(000000-)	Cylinder, Hyd, 2.0B 24.1L 15.00Strk 3000	2
13	77097	(000000-)	Fitting, Hyd, E90, Jm04/Om04	4
14	1025904	(000000-)	Fitting, Hyd, Rst, Jf04/Jm04, .028	2
15	1034227	(000000-)	Plate, Bellcrank, Hppr, Lock	1
16	1036271	(000000-)	Plate, Bellcrank	1
17	1037827	(000000-)	Bushing, Flng, 0.87b 1.25d 0.38l	1
18	87816	(000000-)	Spring, Extn, 0.75od 0.09wir 02.5l	1
19	41305	(000000-)	Pin, Clevis, 0.37d X 0.75l	2
20	06965	(000000-)	Screw, Hex, M10 X 1.50 X 80, 8.8	1
21	08714	(000000-)	Nut, Hex, Lock, M10 X 1.5, Nl, Ss	1
22	1014563	(000000-)	Washer, Flat, 0.40b 1.12d .12, Ss	1
23	41187	(000000-)	Washer, Flat, Belleville, .38	1
24	23211	(000000-)	Switch, Snap, 15a No, Rlr	1
25	09252	(000000-)	Screw, Hex, M5 X 0.80 X 20, 8.8	2
26	19066	(000000-)	Washer, Flat, 10	2
27	07789	(000000-)	Nut, Hex, Flng, M5 X 0.80	2
28	1018240	(000000-)	Bracket, Mtg, Switch	1
29	361339	(000000-)	Screw, Hex, M6 X 1.00 X 16, Fmg	2
30	32483	(000000-)	Washer, Flat, 0.25, Sae	2
31	1018266	(000000-)	Pin, Arm, Safety	1
32	09206	(000000-)	Screw, Hex, M4 X 0.70 X 12, 8.8	1
33	02850	(000000-)	Nut, Hex, Lock, M4 X 0.70, Nl	1

Fig. 43 - Hopper and Debris Screen Group

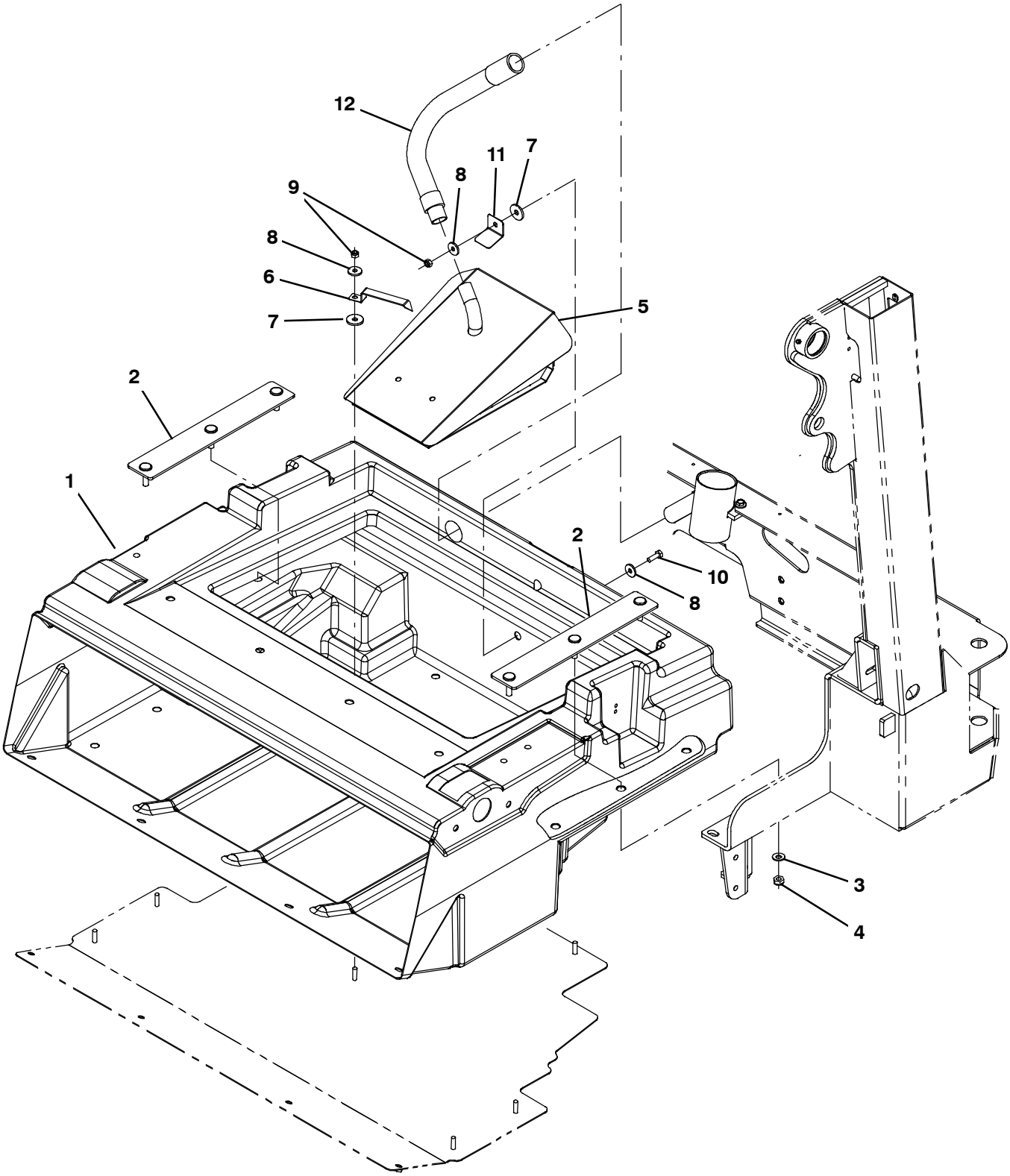

354611

Fig. 43 - Hopper and Debris Screen Group

Ref.	Part No.	Serial Number	Description	Qty.
1	1036419	(000000-)	Hopper, Debris [M30]	1
2	1018272	(000000-)	Bar, Mtg, Hppr	2
3	763042	(000000-)	Washer, Flat, Belleville, M10	6
4	08714	(000000-)	Nut, Hex, Lock, M10 X 1.5, Nl, Ss	6
5	1039163	(000000-)	Screen Wldt, Hppr	1
6	1044323	(000000-)	Spring, Flat, Retainer, Angled Screen	1
7	222268	(000000-)	Washer, Flat, 0.38b 1.25d .12, Neo	2
8	1017218	(000000-)	Washer, Flat, 0.32b 1.00d .12, Ss	3
9	08713	(000000-)	Nut, Hex, Lock, M8 X 1.25, Nl, Ss	2
10	09010	(000000-)	Screw, Hex, M8 X 1.25 X 25, Ss	1
11	1039215	(000000-)	Angle, Retainer	1
12	1018239	(000000-)	Hose Assy, W/1cuff, 1.0d 009l 1.0/	1

Fig. 44 - Hopper Cover and Dust Filter Group

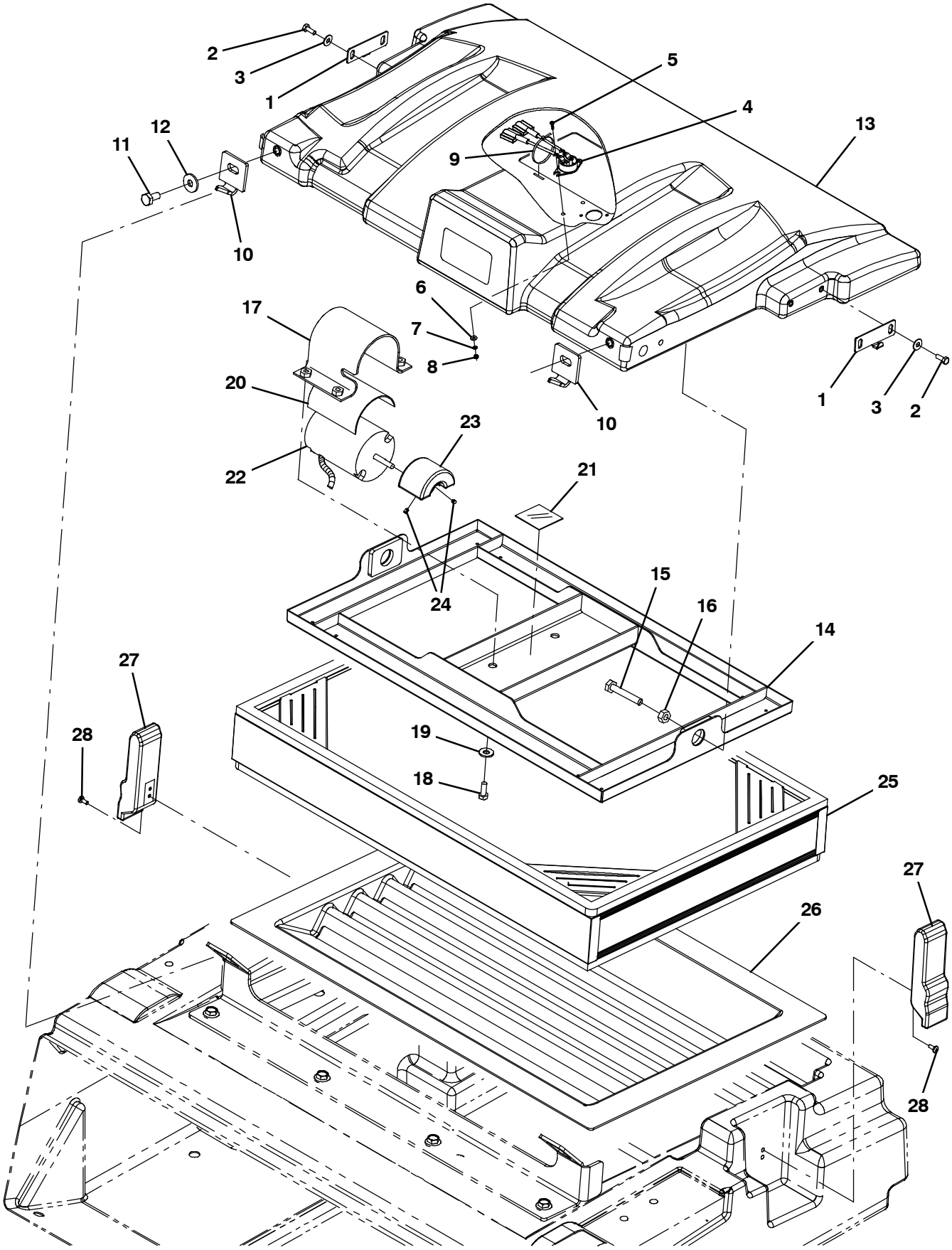

354612

Fig. 44 - Hopper Cover and Dust Filter Group

Ref.	Part No.	Serial Number	Description	Qty.
1	1046427	(000000-)	Bracket, Latch, Cover, Hppr	2
2	09744	(000000-)	Screw, Hex, M6 X 1.00 X 12, Ss	4
3	01684	(000000-)	Washer, Flat, 0.27b 0.69d .05, Ss	4
4	1036611	(000000- 001544)	Switch, Temp [160f]	1
4	1056298	(001545-)	Switch, Temp, Sealed, Nc	1
5	06922	(000000-)	Screw, Pan, Phl, M3 X 0.50 X 20, 4.8	2
6	19064	(000000-)	Washer, Flat, 06	2
7	32975	(000000-)	Washer, Lock, Int, 06	2
8	01754	(000000-)	Nut, Hex, Std, M3 X 0.50, 8	2
9	763116	(000000-)	Tie, Cable, Nyl, 15.3l . W 4.5 Max D	1
10	1018207	(000000-)	Bar, Mtg, Hppr Cover	2
11	09291	(000000-)	Screw, Hex, M10 X 1.50 X 20, Ss	2
12	1014563	(000000-)	Washer, Flat, 0.40b 1.12d .12, Ss	2
13	1041006	(000000-)	Cover, Hppr	1
14	1037235	(000000-)	Shaker Wldt	1
15	06963	(000000-)	Screw, Hex, M10 X 1.50 X 60, 8.8	2
16	39312	(000000-)	Nut, Hex, Std, M10 X 1.50	2
17	1037671	(000000-)	Strap, Mtg, Motor, .12 4.00w	1
18	09740	(000000-)	Screw, Hex, M8 X 1.25 X 20, Ss	4
19	01685	(000000-)	Washer, Flat, 0.38b 0.88d .08, Ss	4
20	36658	(000000-)	Strip, Rbr, 0.06 04.00w 05.0l [Neo/60]	1
21	36661	(000000-)	Strip, Rbr, 0.06 01.00w 04.0l	1
22	1041920	(000000- 001515)	Motor, Ele [12vdc, Shaker]	1
22	1059542	(001516-)	Motor, Ele, 12Vdc, Shakr	1
23	1049242	(000000- 001515)	Weight, Eccentric	1
23	1053320	(001516-)	Weight, Eccentric	1
24	20634	(000000-)	Screw, Set, Soc, 10- 24 X 0.25, Nl	2
25	1048295AM	(000000-)	Filter, Panl, Syn, 4.2 X 20.0 X 30.0	1
26	1037947	(000000-)	Tray, Perma- Filter	1
27	360824	(000000-)	Latch	2
28	09200	(000000-)	Screw, Pan, Phl, M5 X 0.80 X 12, Ss	4

Fig. 45 - Hopper Bumper Group

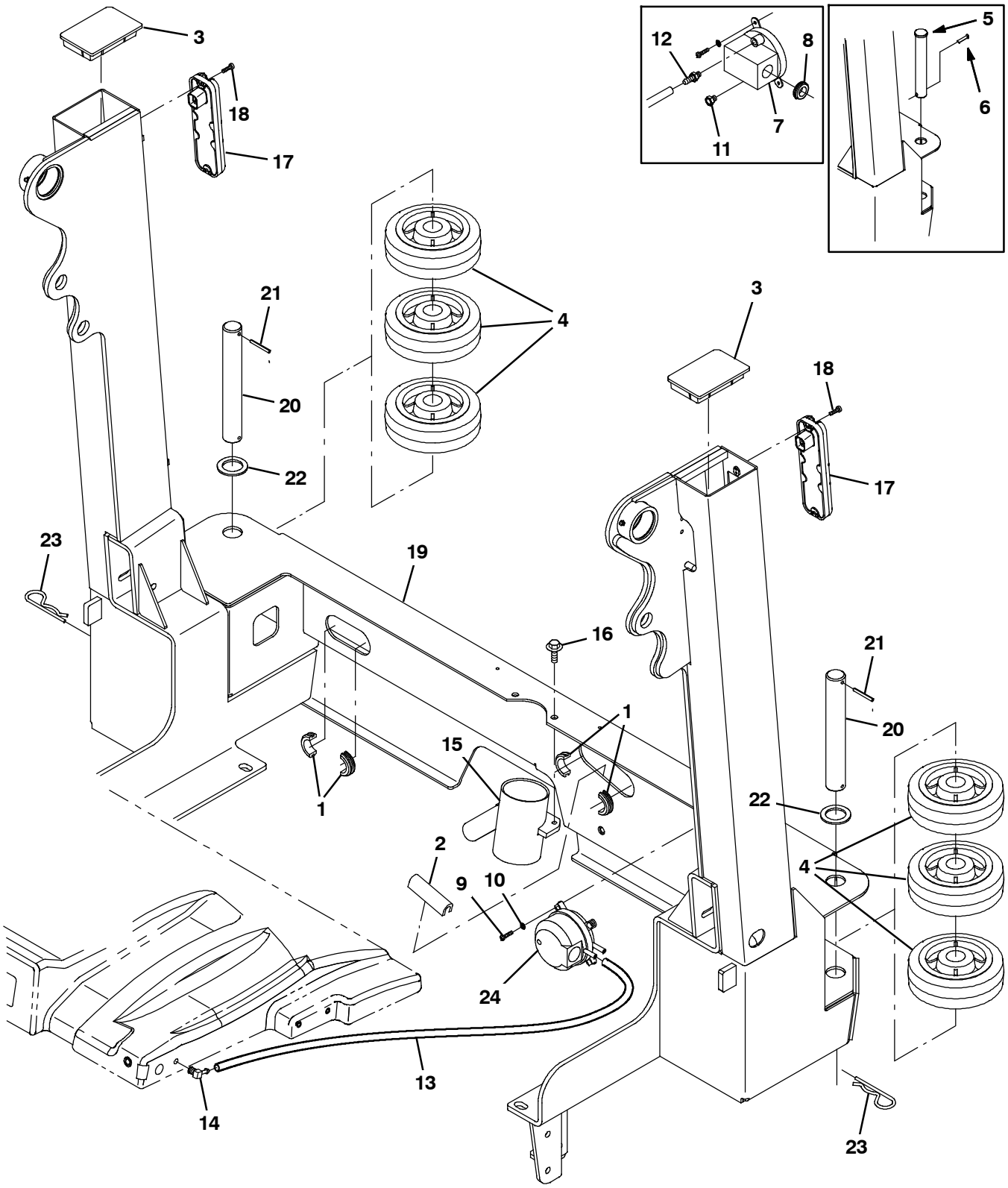

354613

Fig. 45 - Hopper Bumper Group

Ref.	Part No.	Serial Number	Description	Qty.
1	10632- 13	(000000-)	Grommet, Rbr, 1.50id, F/1.8h, .19 Matl	2
2	50646	(000000-)	Molding, Trim, Pvc, .18- .31 07.5l	1
3	1018293	(000000-)	Cap, Arm, Lift	2
4	1021047	(000000-)	Wheel, 06.0d 2.00w 1.19b, Gray Rbr	6
5	9006334	(000000- 001248)	Pin Kit, Wheel, Ci [M20/T20/M30]	2
6	08171	(000000- 001248)	Pin, Cotter, .156 X 2.00	2
7	39924	(000000- 001419)	Switch, Press, 0008psi Spdt	1
8	10632- 4	(000000- 001419)	Grommet, Rbr, 0.62id, F/0.9h, .06 Matl	1
9	12323	(000000-)	Screw, Pan, Phl, M4 X 0.70 X 20, Ss	2
10	02938	(000000-)	Washer, Lock, Int, 08, Ss	2
11	40607	(000000- 001419)	Fitting, Brs, Str, Bm03/Pm02	1
12	82739	(000000- 001419)	Fitting, Brs, Breather [02mp]	1
13	1031575	(000000-)	Hose, Afmkt, Vacuum, 0.16id, 03ft	1
14	32183	(000000-)	Fitting, Brs, E90, Bm03/Pm02	1
15	1036240	(000000-)	Tube, Vacuum	1
16	1037346	(000000-)	Screw, Hex, M8 X 1.25 X 25, 9.8, Sems	2
17	1018208	(000000-)	Taillight, 12vdc	2
18	06928	(000000-)	Screw, Pan, Phl, M4 X 0.70 X 20, 4.8	4
19	1045529	(000000-)	Hopper Wldt, Lift [M30]	1
20	1053838	(001249-)	Pin, 30mmd X 215mml	2
21	23146	(001249-)	Pin, Roll, .187d X 1.62l, .187/.192	2
22	1062566	(001249-)	Washer, flat, 1.26B 1.88D .13, Stl, Pl	2
23	34411	(001249-)	Pin, Cotter, Hair, 1.00d .178 Wir	2
24	1052885	(001420-)	Switch, Press, Adj [4- 16 In Wtr]	1

Fig. 46 - Hopper Dump Door Group

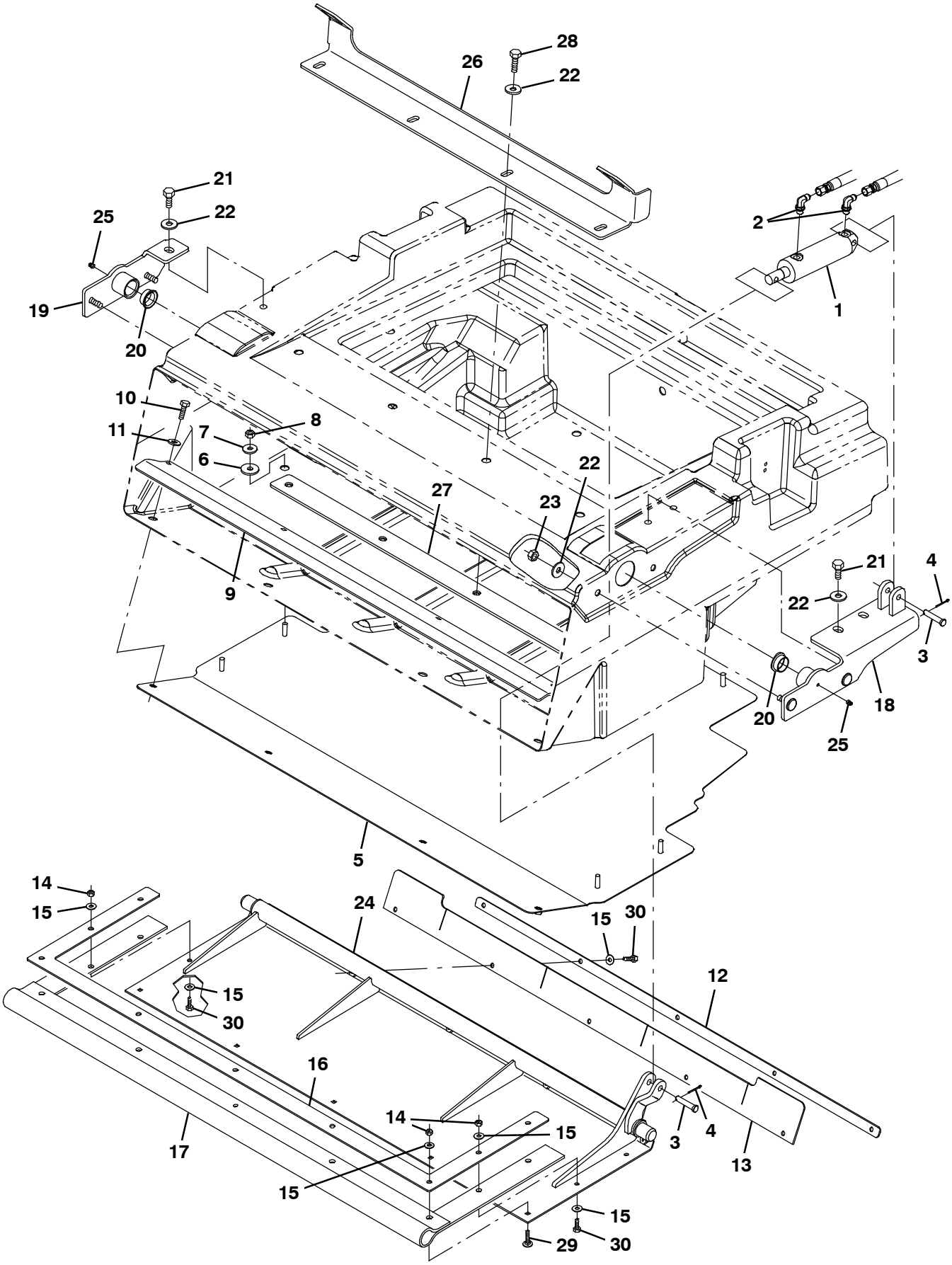

354614

Fig. 46 - Hopper Dump Door Group

Ref.	Part No.	Serial Number	Description	Qty.
1	1038115	(000000-)	Cylinder, Hyd, 1.5B 07.8L 02.75Strk 2500	1
2	77097	(000000-)	Fitting, Hyd, E90, Jm04/Om04	2
3	17461	(000000-)	Pin, Clevis, 0.37d X 1.75l	2
4	08179	(000000-)	Pin, Cotter, .094 X 1.00	2
5	1037843	(000000-)	Plate, Bottom, Hppr	1
6	222268	(000000-)	Washer, Flat, 0.38b 1.25d .12, Neo	4
7	1017218	(000000-)	Washer, Flat, 0.32b 1.00d .12, Ss	4
8	08713	(000000-)	Nut, Hex, Lock, M8 X 1.25, Nl, Ss	4
9	1034694	(000000-)	Bracket, Lip, Hppr	1
10	09010	(000000-)	Screw, Hex, M8 X 1.25 X 25, Ss	4
11	01685	(000000-)	Washer, Flat, 0.38b 0.88d .08, Ss	4
12	1034700	(000000-)	Strap, Door, Dump	1
13	1034701	(000000-)	Seal, Door, Dump	1
14	08712	(000000-)	Nut, Hex, Lock, M6 X 1.00, Nl, Ss	9
15	01684	(000000-)	Washer, Flat, 0.27b 0.69d .05, Ss	14
16	1034686	(000000-)	Plate, Retainer	1
17	1038126	(000000-)	Gasket, Door, Dump	1
18	1038123	(000000-)	Bracket Wldt, Pivot, Hppr Door, Lh	1
19	1038134	(000000-)	Bracket Wldt, Pivot, Hppr, Rh	1
20	367313	(000000-)	Bushing, Flng, 1.00b 1.13d 0.50l	2
21	09291	(000000-)	Screw, Hex, M10 X 1.50 X 20, Ss	3
22	1014563	(000000-)	Washer, Flat, 0.40b 1.12d .12, Ss	11
23	08714	(000000-)	Nut, Hex, Lock, M10 X 1.5, Nl, Ss	4
24	1038121	(000000-)	Door Wldt, Hppr [M30]	1
25	07259	(000000-)	Fitting, Grease, Str Pm04 .47l	2
26	1044993	(000000-)	Bracket, Cover, Hopper	1
27	1018253	(000000-)	Bracket, Cover	1
28	12317	(000000-)	Screw, Hex, M10 X 1.50 X 30, Ss	4
29	379791	(000000-)	Bolt, Carriage, M06 X 1.0 X 30	5
30	08716	(000000-)	Screw, Hex, M6 X 1.0 X 20, Ss	9

Fig. 47 - Brush Drive Group, Left Side

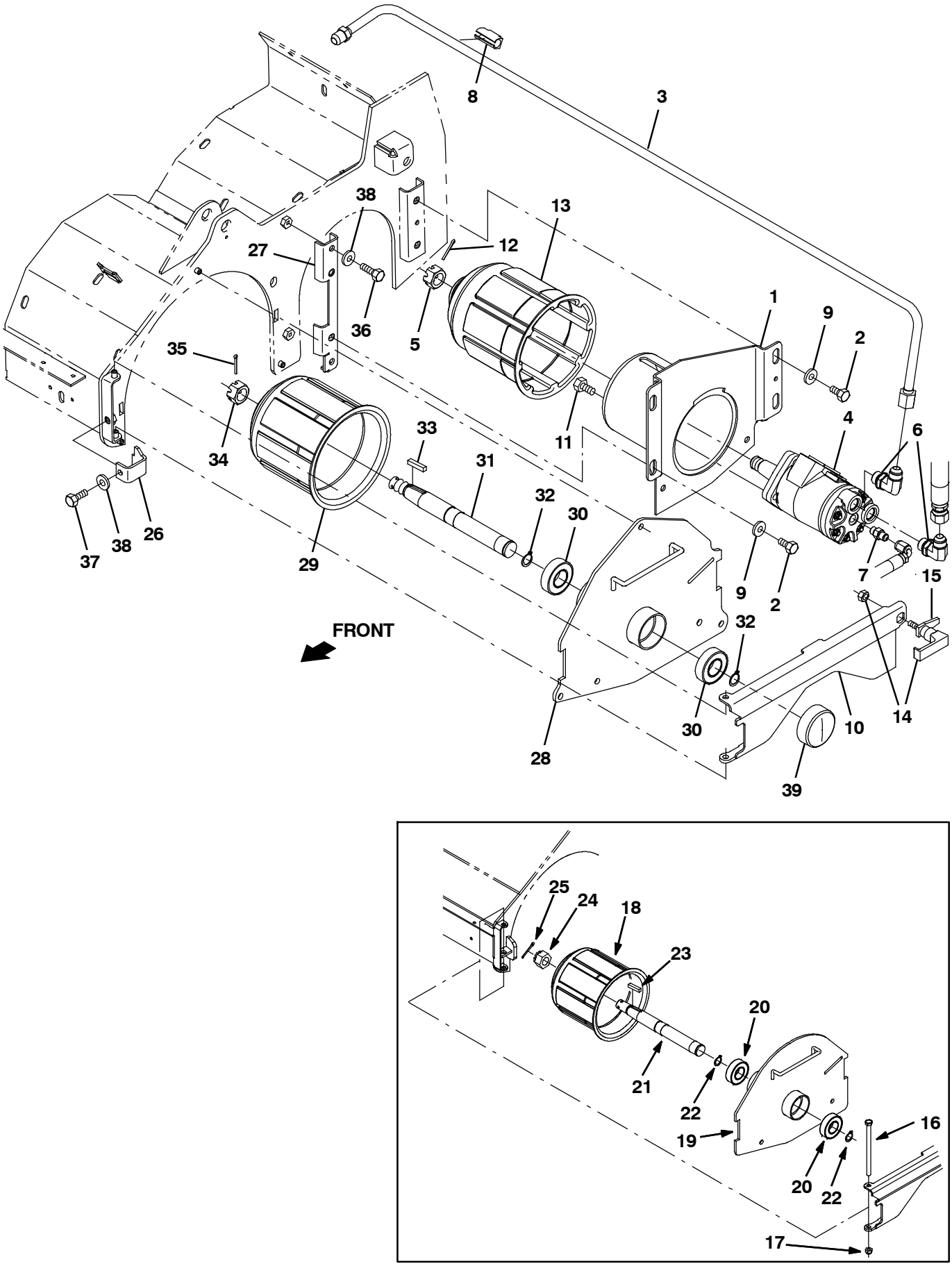

354615

Fig. 47 - Brush Drive Group, Left Side

	Ref.	Part No.	Serial Number	Description	Qty.
	1	1021019	(000000-)	Housing Wldt, Brush, Drive	1
	2	15675	(000000-)	Screw, Hex, M8 X 1.25 X 16, Ss	4
	3	1034243	(000000-)	Tube, Hyd, 08 Jf08/Jf08	1
	4	71729	(000000- 001966)	Motor, Hyd, Gear, Int 04.5 Bi- Dir 1500 (See Breakdowns)	1
▽	4	1068811	(001967-)	Motor, Hyd, Gear, Int 04.5 Bi- Dir 1500	1
▲	5	39527	(000000-)	Nut, Hex, Sltd, .75- 16	1
	6	44868	(000000-)	Fitting, Hyd, E90, Jm08/Om08	2
	7	55586	(000000-)	Fitting, Hyd, Str, Jm04/Om04	1
	8	1026080	(000000-)	Clamp, Hyd, 0.50d	1
	9	32491	(000000-)	Washer, Flat, 0.31, Std	4
	10	1029964	(000000-)	Door Wldt, Brush	1
	11	01762	(000000-)	Screw, Hex, .38- 16 X 0.75, Nl	4
	12	08175	(000000-)	Pin, Cotter, .125 X 1.25	1
	13	87631	(000000- 001966)	Plug Wldt, Drive, Brush, Sweep	1
	13	1057643	(001967-)	Plug Wldt, Drive, Brush, Sweep	1
	14	65695	(000000-)	Latch	1
	15	1026352	(000000-)	Pawl, Str	1
	16	70563	(000000- 001964)	Screw, Hex, M8 X 1.25 X 130, 8.8	1
	17	08713	(000000- 001964)	Nut, Hex, Lock, M8 X 1.25, Nl, Ss	11
▽		9006398	(000000- 001964)	Idler Assy, Brush, Replmt [M20/T20, M30]	1
▲	18	25686	(000000- 001964)	Plug Wldt, Drive, Brush	1
▲	19	1038258	(000000- 001964)	Door Wldt, Brush, Idler	1
▲	20	13534	(000000- 001964)	Bearing, Ball, 0.98b 2.05d 0.59w	2
▲	21	56078	(000000- 001964)	Shaft, Brush, Idler	1
▲	22	09005	(000000- 001964)	Ring, Retaining, Ext, 1.00d, Basic	2
▲	23	00927	(000000- 001964)	Key, Sq, 0.25 X 0.25, 1.25l	1
▲	24	12295	(000000- 001964)	Nut, Hex, Sltd, M20 X 2.5, 8	
▲	25	08175	(000000- 001964)	Pin, Cotter, .125 X 1.25	
	26	1054682	(001965-)	Bracket, Retainer, Lh	1
	27	1054575	(001965-)	Bracket, Sppt	1
▽		9012832	(001965-)	Idler Door Kit, Replmt [M20/T20/M30] (CE ONLY)	1
▲	28	1054857	(001965-)	Door Wldt, Brush, Idler	1
▲	29	25686	(001965-)	Plug Wldt, Drive, Brush	1
▲	30	13534	(001965-)	Bearing, Ball, 0.98b 2.05d 0.59w	2
▲	31	56078	(001965-)	Shaft, Brush, Idler	1
▲	32	09005	(001965-)	Ring, Retaining, Ext, 1.00d, Basic	2
▲	33	00927	(001965-)	Key, Sq, 0.25 X 0.25, 1.25l	1
▲	34	12295	(001965-)	Nut, Hex, Sltd, M20 X 2.5, 8	
▲	35	08175	(001965-)	Pin, Cotter, .125 X 1.25	
	36	09010	(001965-)	Screw, Hex, M8 X 1.25 X 25, Ss	2
	37	09740	(001965-)	Screw, Hex, M8 X 1.25 X 20, Ss	1
	38	32491	(001965-)	Washer, Flat, 0.31, Std	4
	39	1074807	(001965-)	Cap, Vinyl, 57mmid X 23mml	1

Fig. 48 - Brush Drive Group, Right Side

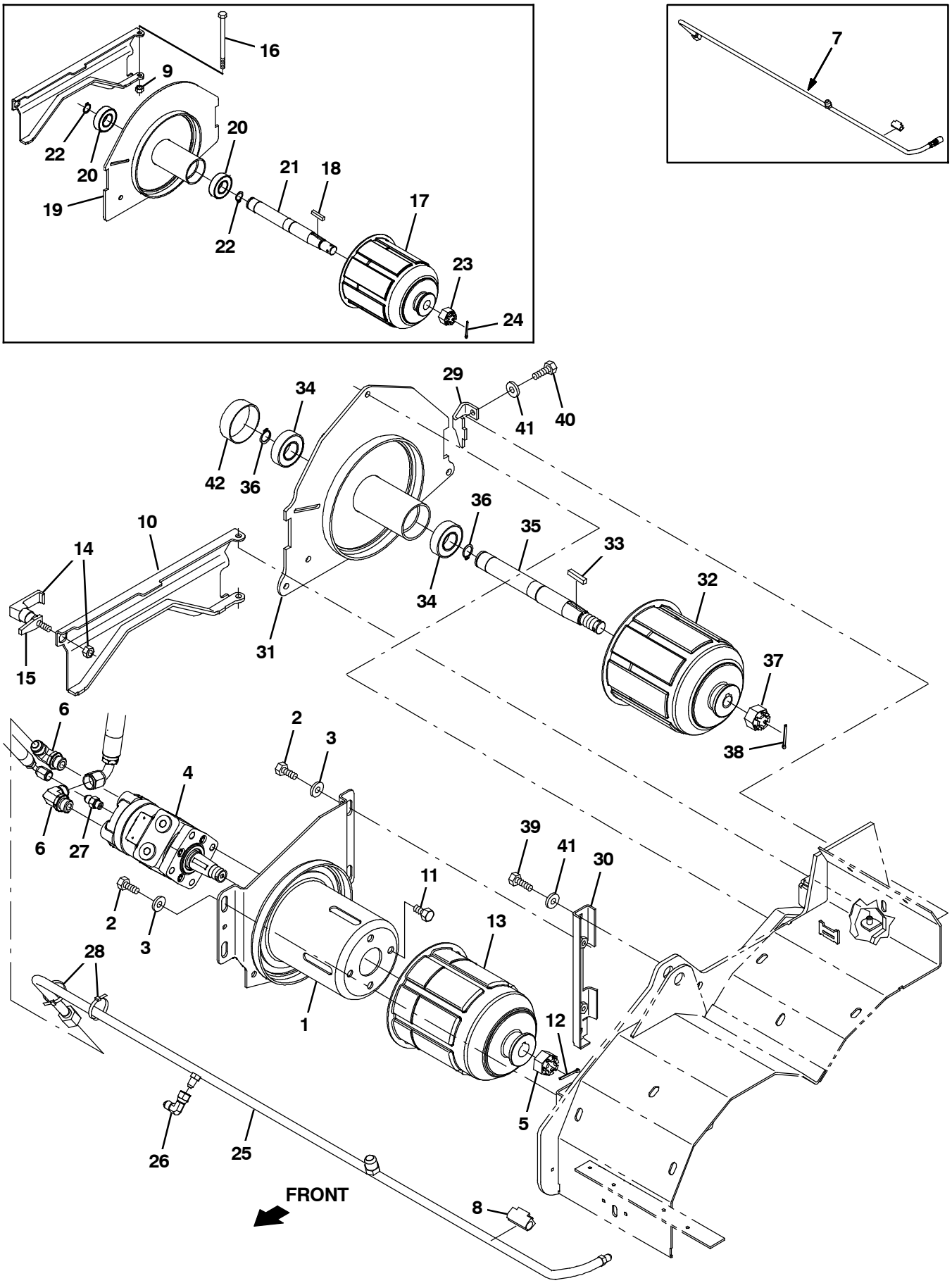

354616

Fig. 48 - Brush Drive Group, Right Side

	Ref.	Part No.	Serial Number	Description	Qty.
	1	1021019	(000000-)	Housing Wldt, Brush, Drive	1
	2	15675	(000000-)	Screw, Hex, M8 X 1.25 X 16, Ss	4
	3	32491	(000000-)	Washer, Flat, 0.31, Std	4
	4	71729	(000000- 001966)	Motor, Hyd, Gear, Int 04.5 Bi- Dir 1500 (See Breakdowns)	1
▽	4	1068811	(001967-)	Motor, Hyd, Gear, Int 04.5 Bi- Dir 1500	1
▲	5	39527	(000000-)	Nut, Hex, Sltd, .75- 16	1
	6	44868	(000000-)	Fitting, Hyd, E90, Jm08/Om08	2
	7	9006384	(000000- 001220)	Tube Kit, Hyd, Case Drain [M30]	1
	8	1026080	(000000-)	Clamp, Hyd, 0.50d	1
	9	08713	(000000-)	Nut, Hex, Lock, M8 X 1.25, Nl, Ss	1
	10	1029964	(000000-)	Door Wldt, Brush	1
	11	01762	(000000-)	Screw, Hex, .38- 16 X 0.75, Nl	4
	12	08175	(000000-)	Pin, Cotter, .125 X 1.25	1
	13	87631	(000000- 001966)	Plug Wldt, Drive, Brush, Sweep	1
	13	1057643	(001967-)	Plug Wldt, Drive, Brush, Sweep	1
	14	65695	(000000-)	Latch	1
	15	1026352	(000000-)	Pawl, Str	1
	16	70563	(000000- 001964)	Screw, Hex, M8 X 1.25 X 130, 8.8	1
▽		9006398	(000000- 001964)	Idler Assy, Brush, Replmt [M20/T20, M30]	1
▲	17	25686	(000000- 001964)	Plug Wldt, Drive, Brush	1
▲	18	00927	(000000- 001964)	Key, Sq, 0.25 X 0.25, 1.25l	1
▲	19	1038258	(000000- 001964)	Door Wldt, Brush, Idler	1
▲	20	13534	(000000- 001964)	Bearing, Ball, 0.98b 2.05d 0.59w	2
▲	21	56078	(000000- 001964)	Shaft, Brush, Idler	1
▲	22	09005	(000000- 001964)	Ring, Retaining, Ext, 1.00d, Basic	2
▲	23	12295	(000000- 001964)	Nut, Hex, Sltd, M20 X 2.5, 8	1
▲	24	08175	(000000- 001964)	Pin, Cotter, .125 X 1.25	1
	25	1055153	(001221-	Tube, Hyd, Brush Return, W/ Cd [M30]	1
	26	39210	(001221-	Fitting, Hyd, E90, Jf04/Jm04	1
	27	55586	(001221-	Fitting, Hyd, Str, Jm04/Om04	1
	28	49266	(001221-	Tie, Cable, Nyl, 07.3l .19w 1.8 Max D	2
	29	1054610	(001965-)	Bracket, Retainer, Rh	1
	30	1054575	(001965-)	Bracket, Sppt	1
▽		9012832	(001965-)	Idler Door Kit, Replmt [M20/T20/M30] (CE ONLY)	1
▲	31	1054857	(001965-)	Door Wldt, Brush, Idler	1
▲	32	25686	(001965-)	Plug Wldt, Drive, Brush	1
▲	33	00927	(001965-)	Key, Sq, 0.25 X 0.25, 1.25l	1
▲	34	13534	(001965-)	Bearing, Ball, 0.98b 2.05d 0.59w	2
▲	35	56078	(001965-)	Shaft, Brush, Idler	1
▲	36	09005	(001965-)	Ring, Retaining, Ext, 1.00d, Basic	2
▲	37	12295	(001965-)	Nut, Hex, Sltd, M20 X 2.5, 8	1
▲	38	08175	(001965-)	Pin, Cotter, .125 X 1.25	1
	39	09010	(001965-)	Screw, Hex, M8 X 1.25 X 25, Ss	2
	40	09740	(001965-)	Screw, Hex, M8 X 1.25 X 20, Ss	1
	41	32491	(001965-)	Washer, Flat, 0.31, Std	3
	42	1074807	(001965-)	Cap, Vinyl, 57mmid X 23mml	1

Fig. 49 - Brush Head Lift Group

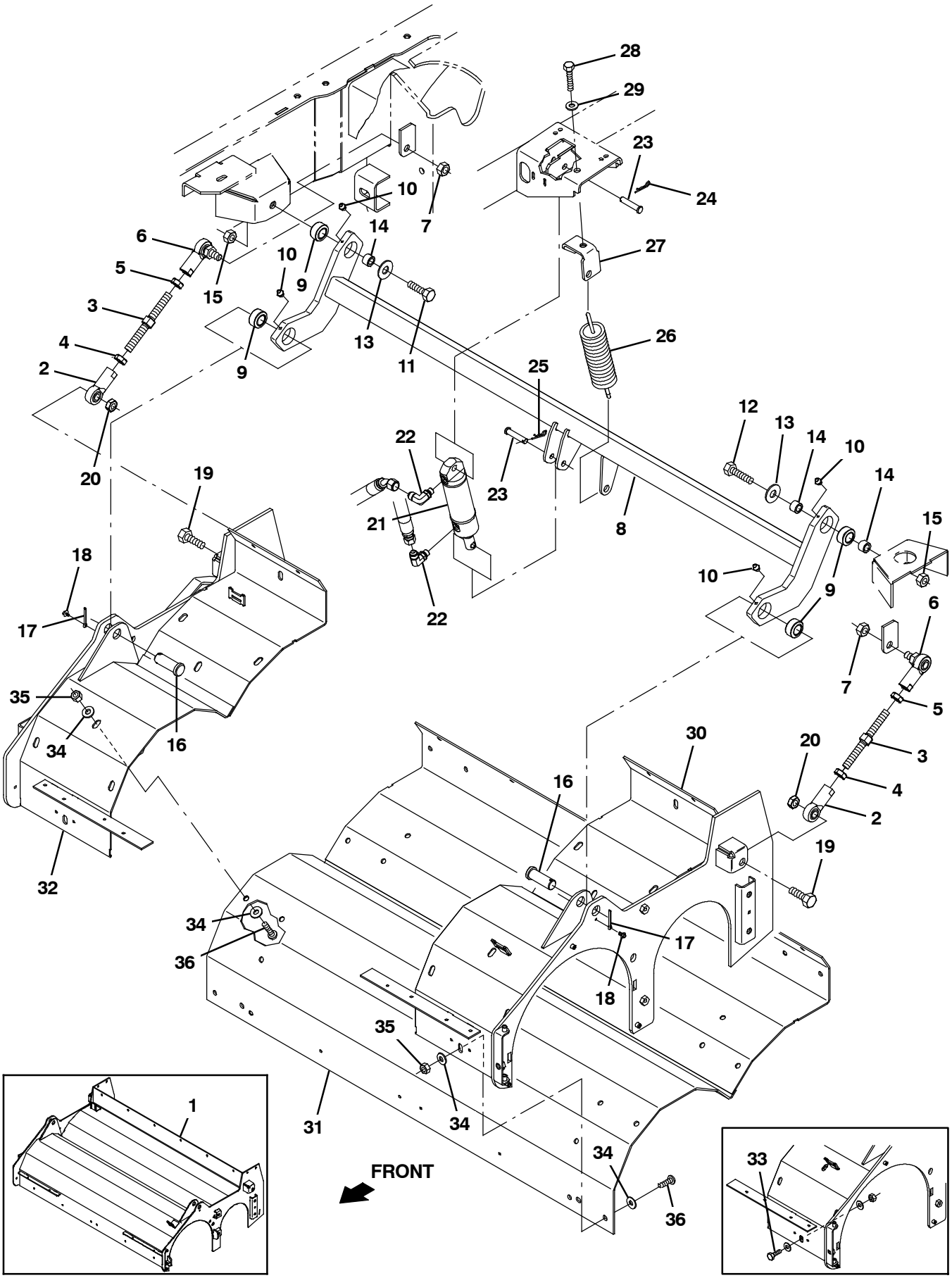

354617

Fig. 49 - Brush Head Lift Group

Ref.	Part No.	Serial Number	Description	Qty.
1	1033248	(000000- 001964)	Housing Wldt, Swp, Scb	1
2	67555	(000000-)	Rod- End, 0.50- 20rh Fem 0.50b	2
3	1014705	(000000-)	Rod, Thrd, 2 End, .50- 20 04.9l, Rh / Lh	2
4	48985	(000000-)	Nut, Hex, Jam, .50- 20	2
5	71369	(000000-)	Nut, Hex, Jam, .50- 20, Lh	2
6	382099	(000000-)	Rod- End, 0.50- 20lh Fem 0.50- 20stud	2
7	51824	(000000-)	Nut, Hex, Lock, .50- 20, Nl, Thin	2
8	1033258	(000000-)	Tube Wldt, Torque	1
9	42120	(000000-)	Bearing, Self Align, 0.75b 1.25d	4
10	07259	(000000-)	Fitting, Grease, Str Pm04 .47l	4
11	06969	(000000-)	Screw, Hex, M12 X 1.75 X 40, 8.8	1
12	06972	(000000-)	Screw, Hex, M12 X 1.75 X 60, 8.8	1
13	41619	(000000-)	Washer, Flat, 0.56b 1.38d .11, Ss	2
14	1025100	(000000-)	Sleeve, P/M, 0.47b 0.75d 0.5l [430ss]	3
15	09741	(000000-)	Nut, Hex, Lock, M12 X 1.75, Nl, Ss	2
16	04733- 12	(000000-)	Pin, Clevis, 0.75d X 2.00l	2
17	08236	(000000-)	Pin, Cotter, .156 X 1.25	2
18	223198	(000000-)	Screw, Hex, M5 X 0.80 X 10, Fmg	2
19	39811	(000000-)	Screw, Hex, .50- 13 X 1.50, G5	2
20	36644	(000000-)	Nut, Hex, Lock, .50- 13, Nl, Thin	2
21	1038137	(000000-)	Cylinder, Hyd, 1.5b 07.8l 02.80strk 2500	1
22	77098	(000000-)	Fitting, Hyd, E90, Jm06/Om04	2
23	17461	(000000-)	Pin, Clevis, 0.37d X 1.75l	2
24	86866	(000000-)	Pin, Cotter, Hair, 0.38d .072 Wir	1
25	08179	(000000-)	Pin, Cotter, .094 X 1.00	1
26	1042686	(000000-)	Spring, Extn, 2.00od 0.25wir 07.5l	1
27	1027810	(000000-)	Bracket, Mtg, Spring	1
28	763090	(000000-)	Screw, Hex, M8 X 1.25 X 60, Fl	1
29	32491	(000000-)	Washer, Flat, 0.31, Std	1
30	1052342	(001965-)	Bracket Wldt, Brush Wrap, Lh	1
31	1069562	(001965-)	Plate Wldt, Wrap, Brush	1
32	1052124	(001965-)	Bracket Wldt, Brush Wrap Mtg, Rh	1
33	09740	(001965- 004469)	Screw, Hex, M8 X 1.25 X 20, Ss	10
34	32491	(001965-)	Washer, Flat, 0.31, Std	20
35	08713	(001965-)	Nut, Hex, Lock, M8 X 1.25, Nl, Ss	10
36	223470	(004470-)	Screw, Btn, M8 X 1.25 X 25, Ss	10

Fig. 50 - Brush Head Skirt Group

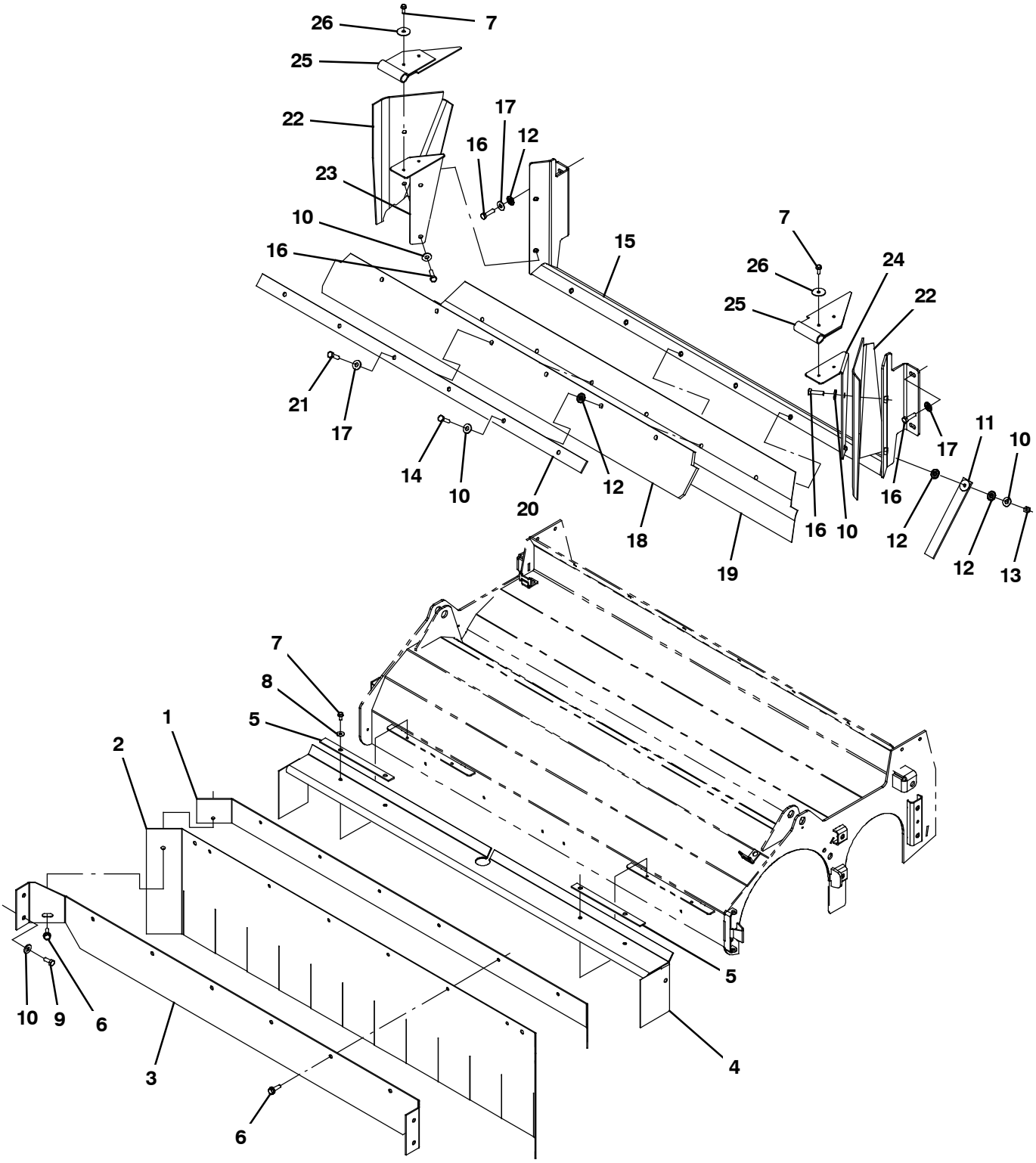

354618 - M30

Fig. 50 - Brush Head Skirt Group

Ref.	Part No.	Serial Number	Description	Qty.
1	1033267	(000000-)	Plate, Skirt, Front	1
2	1033269	(000000-)	Skirt, Neo, .06, 12.00w 53.50l, 10/ Hole	1
3	1033573	(000000-)	Retainer, Skirt, Front	1
4	1033265	(000000-)	Skirt, Neo, .06, 08.40w 58.50l, 12/ Hole	1
5	1022003	(000000-)	Retainer, Skirt, .12, 0.8w X 09.1l, Gray	2
6	76099	(000000-)	Screw, Hex, M8 X 1.25 X 25, Fmg	8
7	361339	(000000-)	Screw, Hex, M6 X 1.00 X 16, Fmg	10
8	01684	(000000-)	Washer, Flat, 0.27b 0.69d .05, Ss	6
9	09740	(000000-)	Screw, Hex, M8 X 1.25 X 20, Ss	4
10	01685	(000000-)	Washer, Flat, 0.38b 0.88d .08, Ss	10
11	71579	(000000-)	Strap, Static, W/Grommet, .19 1.1w 25.0l	1
12	41141	(000000-)	Washer, Lock, Int- Ext, 0.31	4
13	08713	(000000-)	Nut, Hex, Lock, M8 X 1.25, Nl, Ss	1
14	33401	(000000-)	Screw, Hex, M8 X 1.25 X 50, Fl, Ss	1
15	1033538	(000000-)	Bracket Wldt, Flap, Recirculation	1
16	09010	(000000-)	Screw, Hex, M8 X 1.25 X 25, Ss	8
17	32491	(000000-)	Washer, Flat, 0.31, Std	9
18	1033548	(000000-)	Skirt, Rbr, .37, 04.50w 48.00l, 06/ Hole	1
19	1033549	(000000-)	Skirt, Neo, .06, 06.38w 48.00l, 06/ Hole	1
20	1033550	(000000-)	Strip, Flap, Recirculation	1
21	09011	(000000-)	Screw, Hex, M8 X 1.25 X 30, Ss	5
22	1034328	(000000-)	Skirt, Neo, .13, 08.25w 13.98l, 02/ Hole	2
23	1039620	(000000-)	Retainer, Skirt, .12, Rh	1
24	1039622	(000000-)	Retainer, Skirt, .12, Lh	1
25	1039623	(000000-)	Skirt, Neo, .06, 03.35w 12.90l, 04/ Hole	2
26	41178	(000000-)	Washer, Flat, 0.25, Fendr	4

Fig. 51 - Squeegee Lift Group, Rear

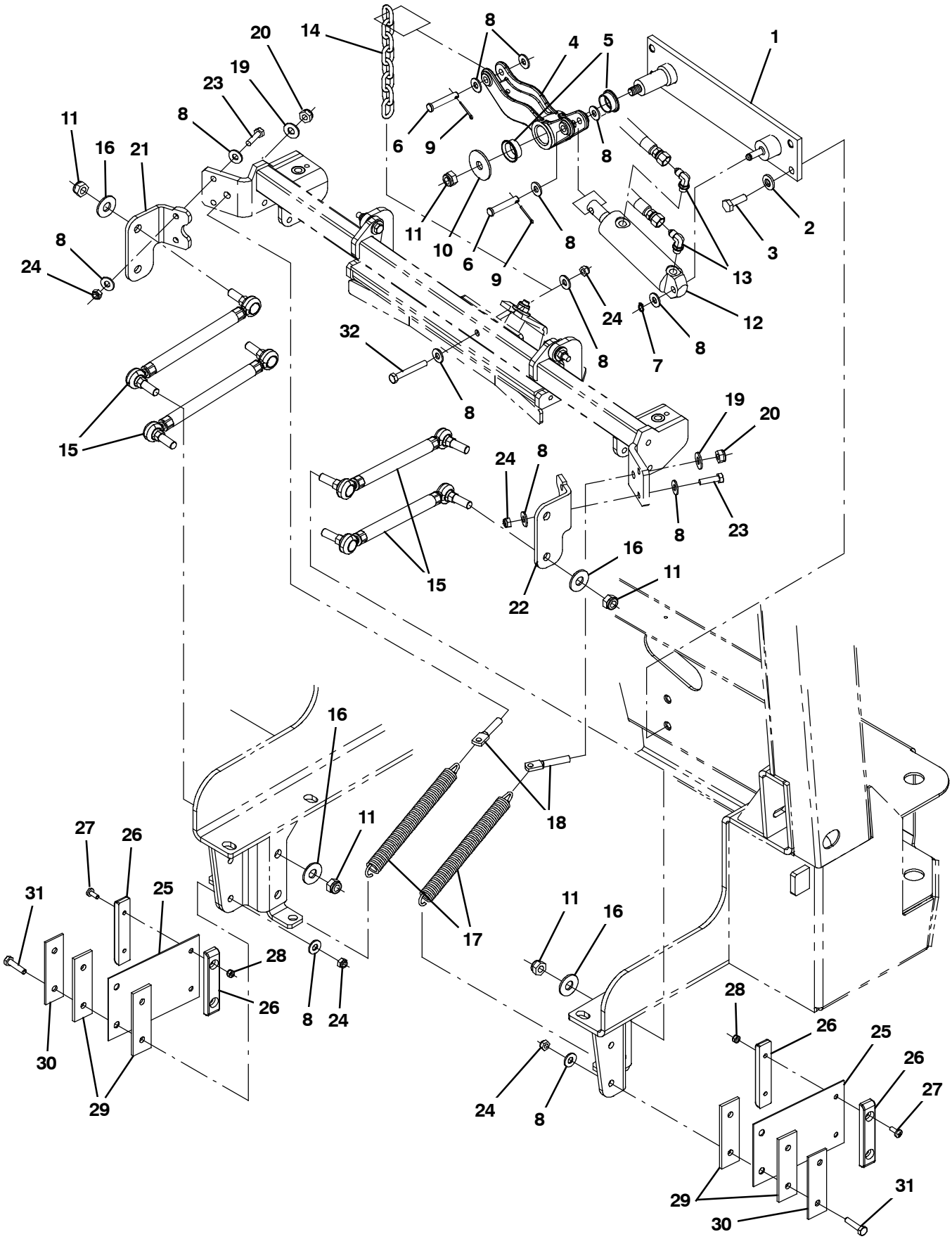

354619

Fig. 51 - Squeegee Lift Group, Rear

Ref.	Part No.	Serial Number	Description	Qty.
1	1021609	(000000-)	Plate Wldt, Lift, Sqge	1
2	41187	(000000-)	Washer, Flat, Belleville, .38	4
3	12317	(000000-)	Screw, Hex, M10 X 1.50 X 30, Ss	4
4	1025680	(000000-)	Bellcrank, Lift, Sqge	1
5	367313	(000000-)	Bushing, Flng, 1.00b 1.13d 0.50l	2
6	29584	(000000-)	Pin, Clevis, 0.37d X 2.00l	2
7	23524-1	(000000-)	Ring, Retaining, Ext, 0.38d, [Selflock]	1
8	01685	(000000-)	Washer, Flat, 0.38b 0.88d .08, Ss	19
9	08179	(000000-)	Pin, Cotter, .094 X 1.00	2
10	04414	(000000-)	Washer, Flat, 0.53b 1.88d .12, Stl, Pl	1
11	09741	(000000-)	Nut, Hex, Lock, M12 X 1.75, Nl, Ss	9
12	1038137	(000000-)	Cylinder, Hyd, 1.5b 07.8l 02.80strk 2500	1
13	77097	(000000-)	Fitting, Hyd, E90, Jm04/Om04	2
14	1023779	(000000-)	Chain, Str, 4/0, 08 Link	1
15	1026007	(000000-)	Link Assy, Rod-End, M12	4
16	41619	(000000-)	Washer, Flat, 0.56b 1.38d .11, Ss	8
17	46785-1	(000000-)	Spring, Extn, 0.88od 0.14wir 09.0l	2
18	386847	(000000-)	Bolt, Eye, M10 X 1.50 X 064mm, 07.10 Eye	2
19	01686	(000000-)	Washer, Flat, 0.44b 1.00d .08, Ss	2
20	08714	(000000-)	Nut, Hex, Lock, M10 X 1.5, Nl, Ss	2
21	1022372	(000000-)	Angle, Rh	1
22	1022442	(000000-)	Angle, Lh	1
23	09011	(000000-)	Screw, Hex, M8 X 1.25 X 30, Ss	4
24	08713	(000000-)	Nut, Hex, Lock, M8 X 1.25, Nl, Ss	8
25	71204	(000000-)	Spring, Flat, .08, 4.50w X 07.0l	2
26	1024648	(000000-)	Block, Centering	4
27	367770	(000000-)	Screw, Pan, Phl, M6 X 1.00 X 16, Ss	4
28	08712	(000000-)	Nut, Hex, Lock, M6 X 1.00, Nl, Ss	4
29	1024641	(000000-)	Spacer, Pad, Rbr	4
30	1024703	(000000-)	Retainer, Spring	2
31	09023	(000000-)	Screw, Hex, M8 X 1.25 X 35, Fl, Ss	4
32	06957	(000000-)	Screw, Hex, M8 X 1.25 X 60, 8.8	1

Fig. 52 - Squeegee Group, Rear

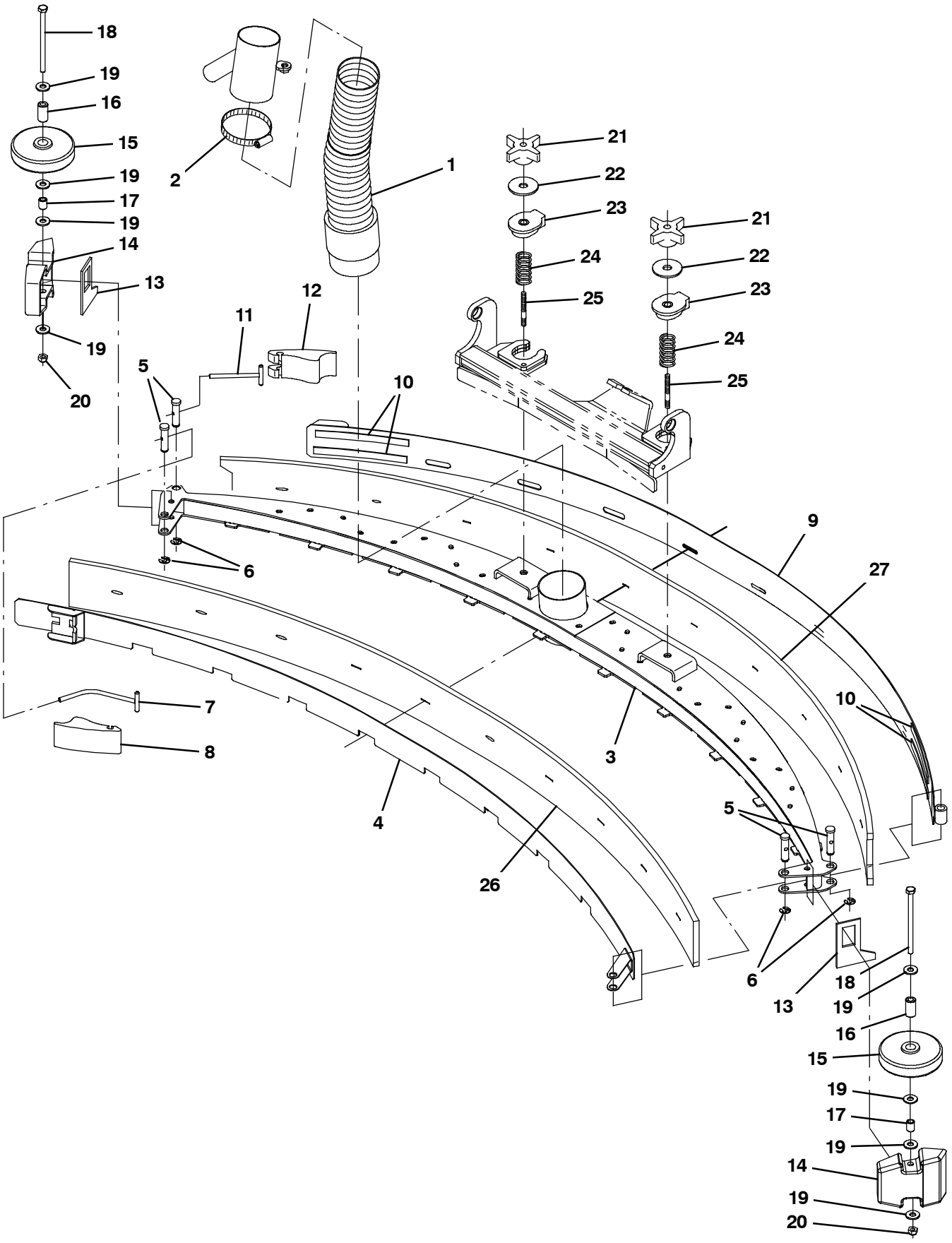

354620

Fig. 52 - Squeegee Group, Rear

	Ref.	Part No.	Serial Number	Description	Qty.
	1	1021511	(000000-)	Hose, Vacuum, 3.00id X 019.0l, 1cuff	1
	2	43555	(000000-)	Clamp, Hose, Wormdrive, 2.50- 3.50d, .50w	1
▽		9004496	(000000-	Squeegee Kit, Rear, Replmt [M30]	1
▲	3	1034862	(000000-)	Squeegee Wldt, Rear	1
▲	4	1035143	(000000-)	Clamp Wldt, Front	1
▲	5	21603	(000000-)	Pin, Grvd, 0.43d 01.8l [303ss]	4
▲	6	24555	(000000-)	Ring, Retaining, Ext, 0.38d, [E- Ring]	4
▲	7	386298	(000000-)	Pin Wldt, Front	1
▲	8	21601	(000000-)	Cam	1
▲	9	1035145	(000000-)	Clamp Wldt, Rear	1
▲	10	03495	(000000-)	Strip, Non Slip, 0.50w 06.0l	4
▲	11	21606	(000000-)	Bar Wldt, Retainer, Sqge, Rear	1
▲	12	21602	(000000-)	Cam, Rear	1
▲	13	83874	(000000-)	Gasket, Sqge	2
▲	14	386264	(000000-)	Bumper, Sqge	2
▲	15	363162	(000000-)	Wheel, 04.0d 0.89w 0.64b	2
▲	16	363301	(000000-)	Sleeve, P/M, 0.34b 0.63d 1.2l, Bnz	2
▲	17	80395	(000000-)	Sleeve, P/M, 0.31b 0.50d 0.7l [430ss]	2
▲	18	364441	(000000-)	Screw, Hex, M8 X 1.25 X 110, Ss	2
▲	19	01685	(000000-)	Washer, Flat, 0.38b 0.88d .08, Ss	8
▲	20	08713	(000000-)	Nut, Hex, Lock, M8 X 1.25, Nl, Ss	2
	21	370100	(000000-)	Knob, Star, 2.80d 4ear 1.1l .31- 18, Pyp	2
	22	04414	(000000-)	Washer, Flat, 0.53b 1.88d .12, Stl, Pl	2
	23	387433	(000000-)	Ring, Mtg, Sqge, .50l	2
	24	387500	(000000-)	Spring, Cmpr, 0.90od .04wir 02.0l	2
	25	387237	(000000-)	Stud, .31- 18 2.75l M8 X 1.25, Ss	2
	26	1035067	(000000-)	Blade, Sqge, .38 3.50W 058.0L [Linard]	1
	26	1038681	(000000-)	Blade, Sqge, .38 3.50W 058.7L, Ure (Option)	1
	27	1035052	(000000-)	Blade, Sqge, .38 4.00W 063.0L, Linatex	1
	27	1038680	(000000-)	Blade, Sqge, .38 4.00W 063.2L, Ure (Option)	1

Fig. 53 - Squeegee Linkage Group, Rear

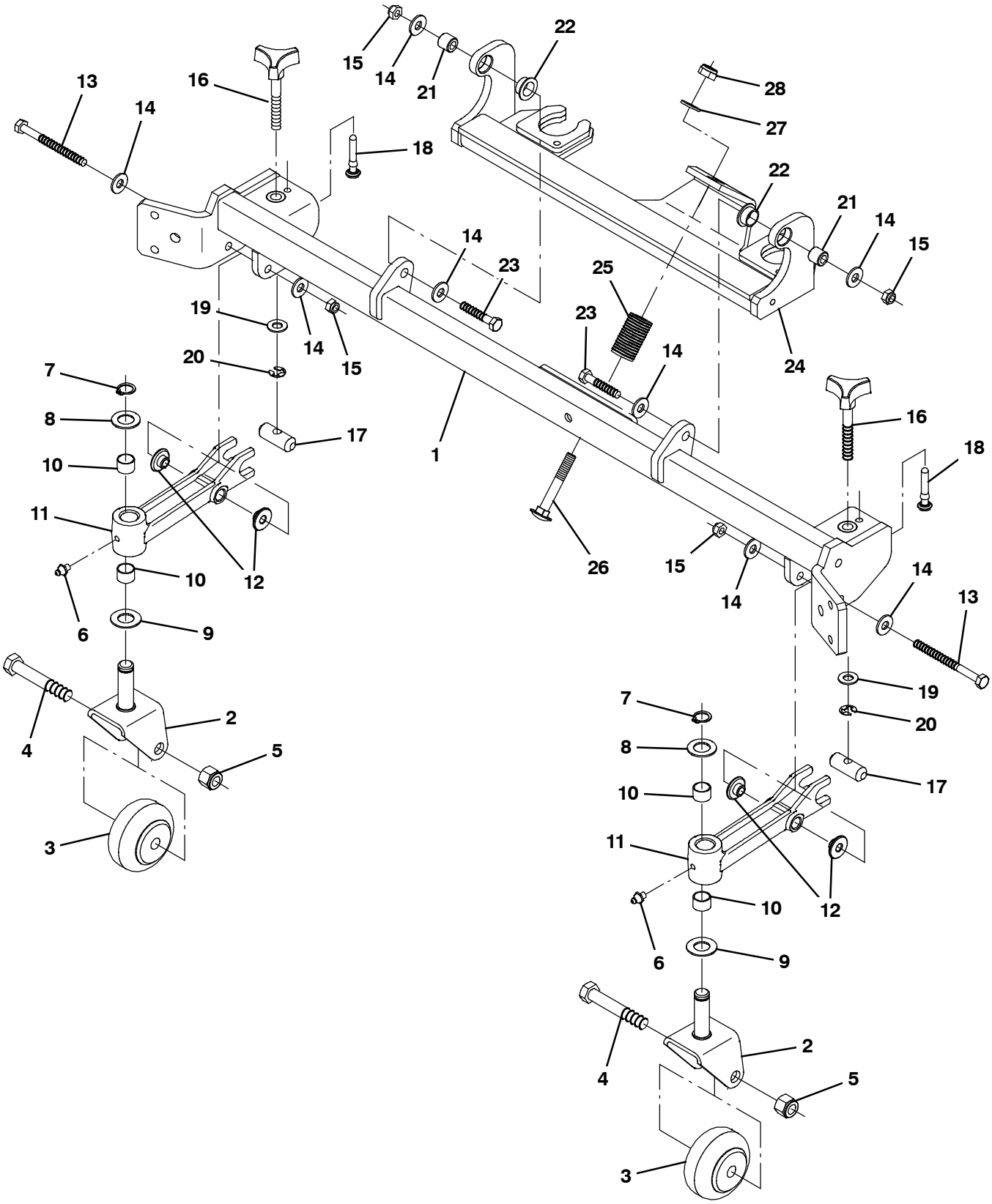

354621

Fig. 53 - Squeegee Linkage Group, Rear

Ref.	Part No.	Serial Number	Description	Qty.
1	1034812	(000000-)	Crossmember Wldt	1
2	1021404	(000000-)	Bracket Wldt, Mtg, Caster	2
3	20833	(000000-)	Wheel, 03.0d 1.38w 0.50b	2
4	81952	(000000-)	Screw, Hex, .50- 13 X 3.00, 18- 8, Ss	2
5	02931	(000000-)	Nut, Hex, Lock, .50- 13, Nl, Ss	2
6	07259	(000000-)	Fitting, Grease, Str Pm04 .47l	2
7	33373	(000000-)	Ring, Retaining, Ext, 0.62d, Hd	2
8	63468	(000000-)	Washer, Flat, 0.69b 1.19d .06, Stl, Pl	2
9	64425	(000000-)	Washer, Thrust, 0.61b 1.25d .06, Fgl	2
10	07449	(000000-)	Bushing, Sleeve, 0.62b 0.72d 0.50l, Fgl	4
11	1069385	(000000-)	Caster, Pivot	2
12	80950	(000000-)	Bushing, Flng, 0.32b 0.50d 0.24l, Bnz	4
13	39281	(000000-)	Screw, Hex, M8 X 1.25 X 90, 8.8	2
14	01685	(000000-)	Washer, Flat, 0.38b 0.88d .08, Ss	8
15	08713	(000000-)	Nut, Hex, Lock, M8 X 1.25, Nl, Ss	4
16	1021546	(000000-)	Knob Assy, Star, 1.12d 3ear M10	2
17	1021497	(000000-)	Pin, 0.63d 01.8l, 1/M10h, 2cham	2
18	1035727	(000000-)	Stop, Rotation	2
19	32485	(000000-)	Washer, Flat, 0.38, Sae	2
20	24555	(000000-)	Ring, Retaining, Ext, 0.38d, [E- Ring]	2
21	80409	(000000-)	Sleeve, P/M, 0.34b 0.63d 0.6l, Bnz	2
22	25735	(000000-)	Bushing, Flng, 0.63b 0.75d 0.38l	2
23	222505	(000000-)	Screw, Hex, M8 X 1.25 X 45, Ss	2
24	1023476	(000000-)	Bracket Wldt, Mtg, Sqge	1
25	65180	(000000-)	Spring, Dsl, 1.00od 0.50id 1.70l	1
26	1025601	(000000-)	Bolt, Carriage, M10 X 1.50 X 70	1
27	1014563	(000000-)	Washer, Flat, 0.40b 1.12d .12, Ss	1
28	08714	(000000-)	Nut, Hex, Lock, M10 X 1.5, Nl, Ss	1

Fig. 54 - Squeegee Group, Right Side

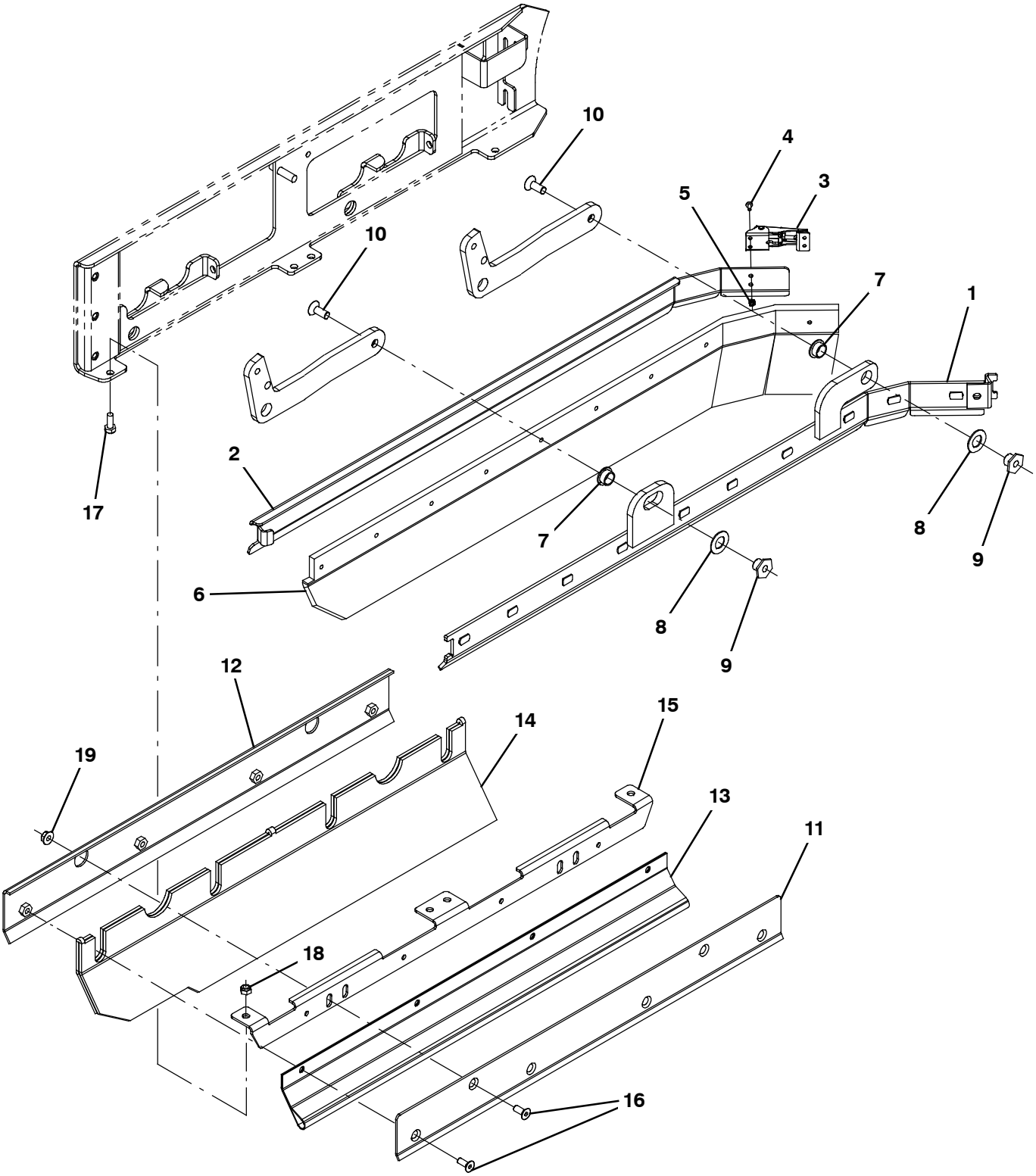

354442

Fig. 54 - Squeegee Group, Right Side

Ref.	Part No.	Serial Number	Description	Qty.
1	1029132	(000000-)	Frame Wldt, Sqge, Rh	1
2	1029128	(000000-)	Retainer, Sqge, Rh Side	1
3	384418	(000000-)	Latch, Door [Southco 91- 562- 07]	1
4	49697	(000000-)	Screw, Pan, Phl, M4 X 0.70 X 10, Ss	2
5	33932	(000000-)	Nut, Hex, Lock, M4 X 0.70, Nl, Ss	2
6	1031011	(000000-)	Blade, Sqge, .38 3.55w 038.3l, Linatex	1
6	1031823	(000000-)	Blade, Sqge, .38 3.55w 038.3l, Ure (Option)	1
7	25735	(000000-)	Bushing, Flng, 0.63b 0.75d 0.38l	2
8	64425	(000000-)	Washer, Thrust, 0.61b 1.25d .06, Fgl	2
9	1022846	(000000-)	Nut, T, M10 X 1.50 X 15.80od X 13.0l	2
10	09081	(000000-)	Screw, Flt, Soc, M10 X 1.50 X 25, 10.9	2
11	1024584	(000000-)	Bracket, Mtg, Skirt, Brush Door	1
12	1024651	(000000-)	Bracket, Mtg, Skirt, Door	1
13	1024586	(000000-)	Skirt, Neo, .06, 06.85w 27.95l, 08/ Hole	1
14	1019295	(000000-)	Skirt, Neo, .18, 10.37w 27.95l, 12/ H&S	1
15	1025151	(000000-)	Bracket, Mtg, Skirt, Brush Door	1
16	222463	(000000-)	Screw, Flt, Soc, M8 X 1.25 X 20, Al, Blk	6
17	393135	(000000-)	Screw, Btn, M8 X 1.25 X 20, Blk	4
18	08713	(000000-)	Nut, Hex, Lock, M8 X 1.25, Nl, Ss	4
19	07791	(000000-)	Nut, Hex, Flng, M8 X 1.25	2

Fig. 55 - Squeegee Lift Group, Right Side

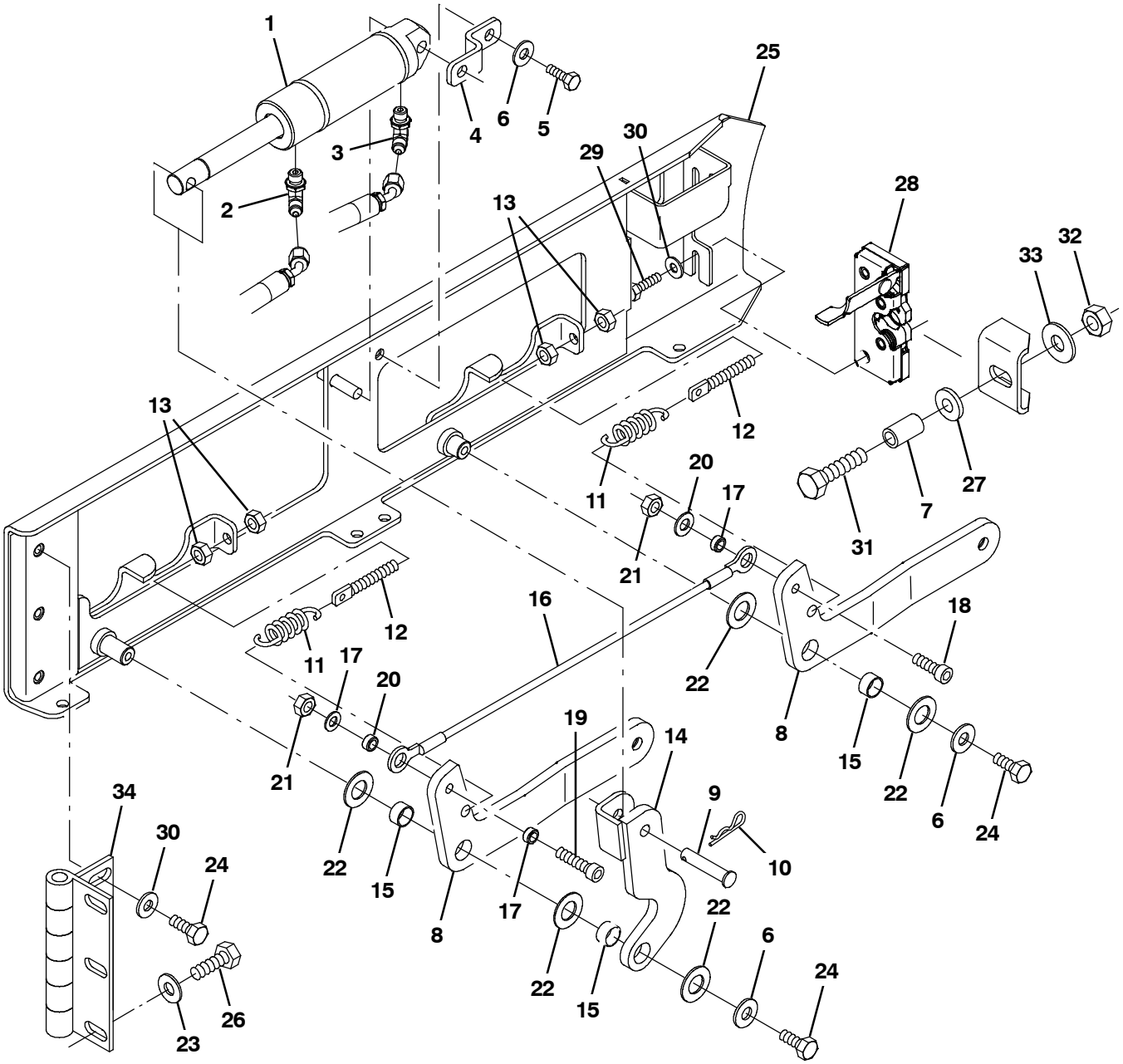

354443

Fig. 55 - Squeegee Lift Group, Right Side

Ref.	Part No.	Serial Number	Description	Qty.
1	1038137	(000000-)	Cylinder, Hyd, 1.5b 07.8l 02.80strk 2500	1
2	77097	(000000-)	Fitting, Hyd, E90, Jm04/Om04	1
3	1028635	(000000-)	Fitting, Hyd, Rst, Spcl	1
4	1022825	(000000-)	Bracket, Mtg, Cyl	1
5	08716	(000000-)	Screw, Hex, M6 X 1.00 X 20, Ss	1
6	01685	(000000-)	Washer, Flat, 0.31, Ss	3
7	1039348	(000000-)	Sleeve, 0.49b 0.68d 1.2l [304ss]	1
8	1020548	(000000-)	Arm, Sqge, Side, Rh	2
9	17461	(000000-)	Pin, Clevis, 0.37D X 1.75L	1
10	08182	(000000-)	Pin, Cotter, .125 X 1.00	1
11	87816	(000000-)	Spring, Extn, 0.75od X 0.09wir, 2.5l	2
12	386088	(000000-)	Bolt, Eye, M08 X 1.25 X 070mm, 05.50 Eye	2
13	07786	(000000-)	Nut, Hex, Std, M8 X 1.25, Ss	4
14	1023306	(000000-)	Arm Wldt, Sqge, Lift, Rh	1
15	71607	(000000-)	Bushing, Sleeve, 0.63b 0.72d 0.38l	3
16	81784	(000000-)	Cable, Glv .13d 015.8l .50eye /.50eye	1
17	360801	(000000-)	Sleeve, 0.31b 0.50d 0.3l, Ss	3
18	39308	(000000-)	Screw, Soc, M8 X 1.25 X 25, 12.9	1
19	41445	(000000-)	Screw, Soc, M8 X 1.25 X 35, 12.9	1
20	39349	(000000-)	Washer, Flat, 0.31 Sae	2
21	08709	(000000-)	Nut, Hex, Lock, M8 X 1.25, Nl	2
22	64425	(000000-)	Washer, Thrust, 0.61b 1.25d .06, Fgl	5
23	41187	(000000-)	Washer, Flat, Belleville, .38	3
24	09740	(000000-)	Screw, Hex, M8 X 1.25 X 20, Ss	5
25	1019031	(000000-)	Door Wldt, Brush, Rh	1
26	09028	(000000-)	Screw, Hex, M10 X 1.5 X 25, Ss	3
27	36328	(000000-)	Washer, Flat, Belleville, .50	1
28	59194	(000000-)	Latch, Hook	1
29	09007	(000000-)	Screw, Hex, M6 X 1.0 X 25, Ss	2
30	41185	(000000-)	Washer, Flat, Belleville, .25	5
31	379870	(000000-)	Screw, Hex, M12 X 1.75 X 55, Ss	1
32	07788	(000000-)	Nut, Hex, Std, M12 X 1.75, Ss	1
33	41619	(000000-)	Washer, Flat, 0.56b 1.38d .11, Ss	1
34	1024576	(000000-)	Hinge, .50pin .19 4.0w 06.0l 3/0.44sl	1

Fig. 56 - Squeegee Group, Left Side

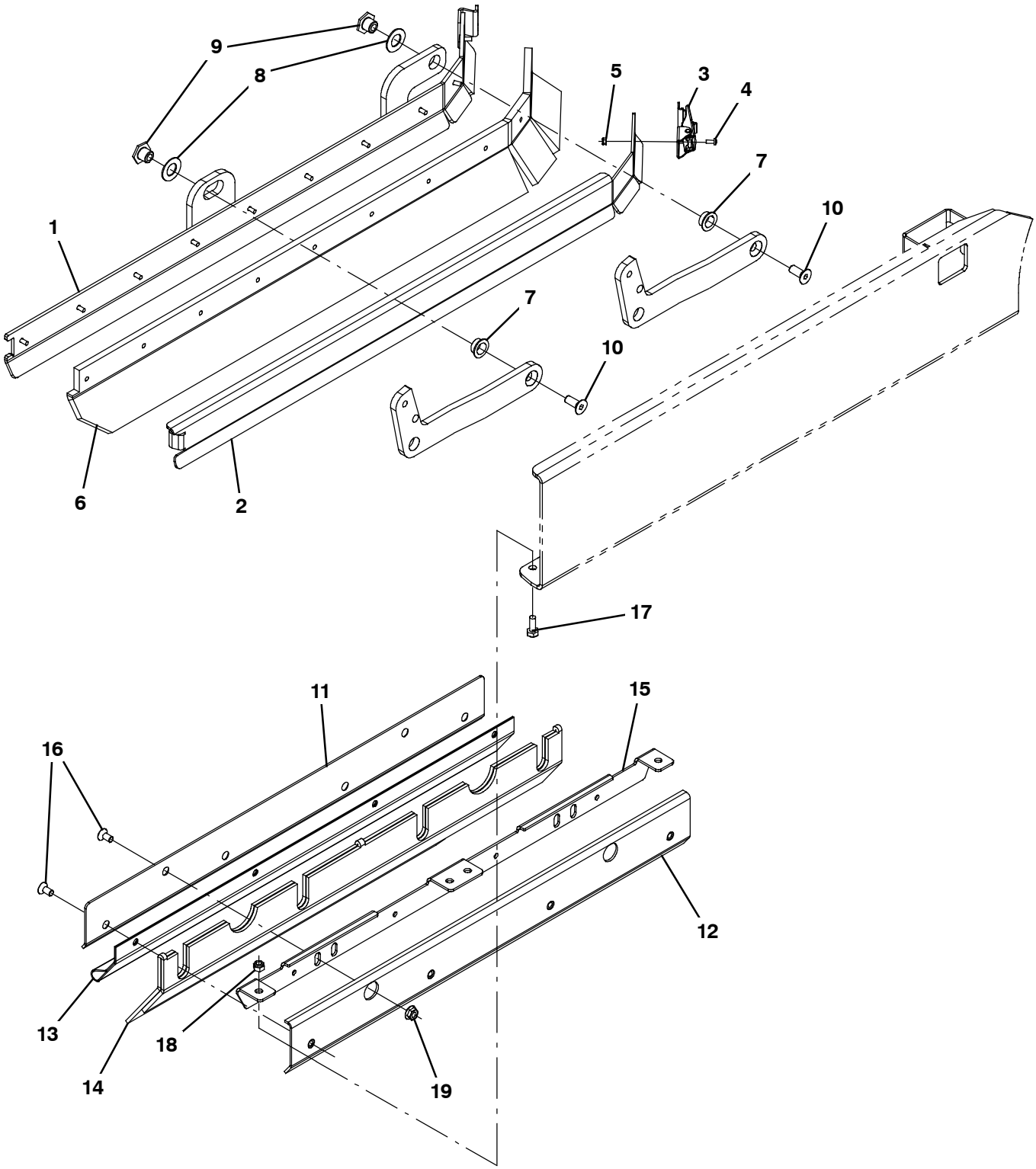

354444

Fig. 56 - Squeegee Group, Left Side

Ref.	Part No.	Serial Number	Description	Qty.
1	1028972	(000000-)	Frame Wldt, Sqge, Lh	1
2	1028979	(000000-)	Retainer, Sqge, Lh Side	1
3	384418	(000000-)	Latch, Door [Southco 91- 562- 07]	1
4	49697	(000000-)	Screw, Pan, Phl, M4 X 0.70 X 10, Ss	2
5	33932	(000000-)	Nut, Hex, Lock, M4 X 0.70, Nl, Ss	2
6	1031011	(000000-)	Blade, Sqge, .38 3.55w 038.3l, Linatex	1
6	1031823	(000000-)	Blade, Sqge, .38 3.55w 038.3l, Ure (Option)	1
7	25735	(000000-)	Bushing, Flng, 0.63b 0.75d 0.38l	2
8	64425	(000000-)	Washer, Thrust, 0.61b 1.25d .06, Fgl	2
9	1022846	(000000-)	Nut, T, M10 X 1.50 X 15.80od X 13.0l	2
10	09081	(000000-)	Screw, Flt, Soc, M10 X 1.50 X 25, 10.9	2
11	1024584	(000000-)	Bracket, Mtg, Skirt, Brush Door	1
12	1024651	(000000-)	Bracket, Mtg, Skirt, Door	1
13	1024586	(000000-)	Skirt, Neo, .06, 06.85w 27.95l, 08/ Hole	1
14	1019295	(000000-)	Skirt, Neo, .18, 10.37w 27.95l, 12/ H&S	1
15	1025151	(000000-)	Bracket, Mtg, Skirt, Brush Door	1
16	222463	(000000-)	Screw, Flt, Soc, M8 X 1.25 X 20, Al, Blk	6
17	393135	(000000-)	Screw, Btn, M8 X 1.25 X 20, Blk	4
18	08713	(000000-)	Nut, Hex, Lock, M8 X 1.25, Nl, Ss	4
19	07791	(000000-)	Nut, Hex, Flng, M8 X 1.25	2

Fig. 57 - Squeegee Lift Group, Left Side

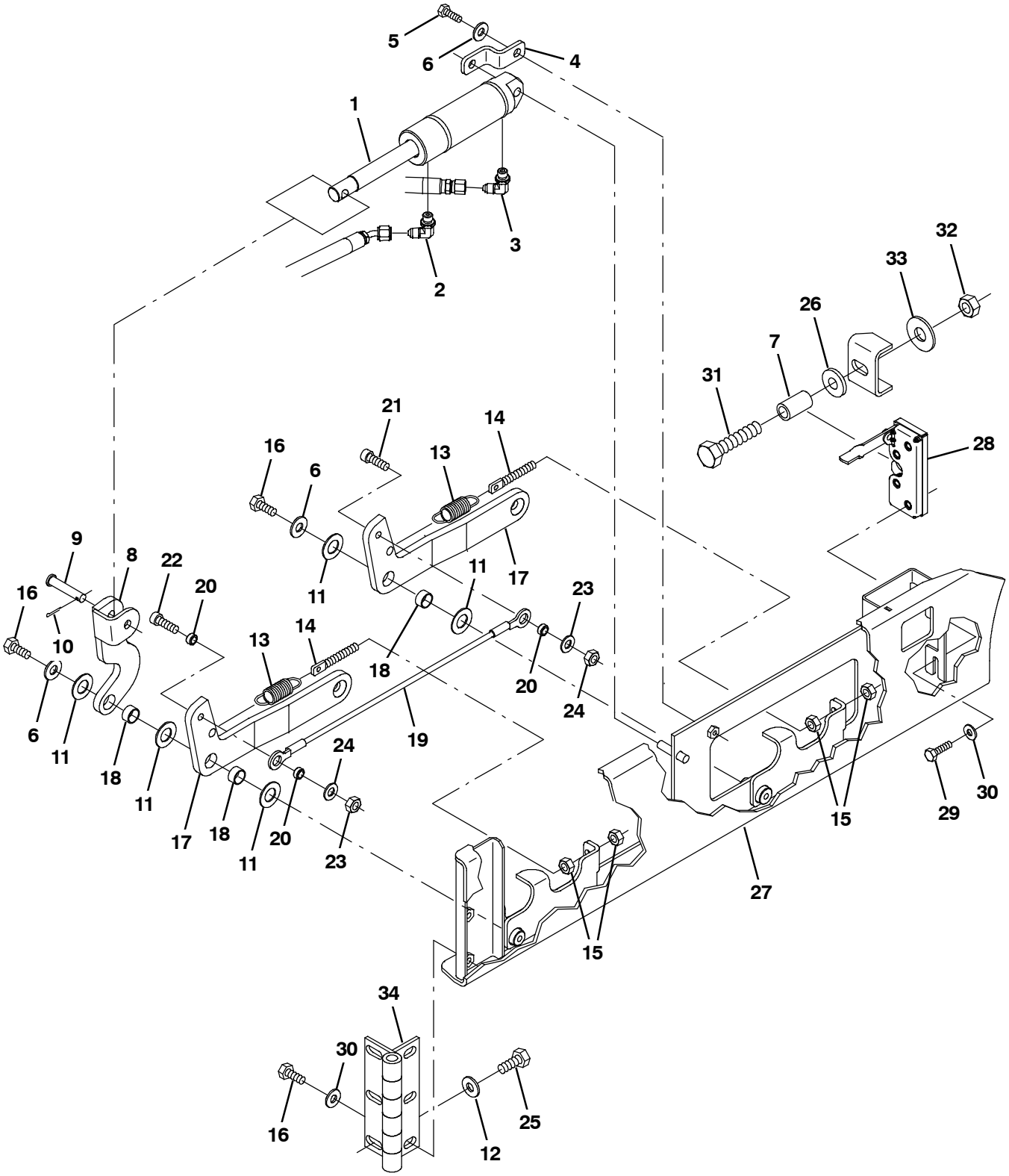

354445

Fig. 57 - Squeegee Lift Group, Left Side

Ref.	Part No.	Serial Number	Description	Qty.
1	1038137	(000000-)	Cylinder, Hyd, 1.5b 07.8l 02.80strk 2500	1
2	77097	(000000-)	Fitting, Hyd, E90, Jm04/Om04	1
3	1028635	(000000-)	Fitting, Hyd, Rst, Spcl	1
4	1022825	(000000-)	Bracket, Mtg, Cyl	1
5	08716	(000000-)	Screw, Hex, M6 X 1.00 X 20, Ss	1
6	01685	(000000-)	Washer, Flat, 0.31, Ss	3
7	1039348	(000000-)	Sleeve, 0.49b 0.68d 1.2l [304ss]	1
8	1022978	(000000-)	Arm Wldt, Lift, Sqge, Lh	1
9	17461	(000000-)	Pin, Clevis, 0.37D X 1.75L	1
10	08182	(000000-)	Pin, Cotter, .125 X 1.00	1
11	64425	(000000-)	Washer, Thrust, 0.61b 1.25d .06, Fgl	5
12	41187	(000000-)	Washer, Flat, Belleville, .38	3
13	87816	(000000-)	Spring, Extn, 0.75od X 0.09wir, 2.5l	2
14	386088	(000000-)	Bolt, Eye, M08 X 1.25 X 070mm, 05.50 Eye	2
15	07786	(000000-)	Nut, Hex, Std, M8 X 1.25, Ss	4
16	09740	(000000-)	Screw, Hex, M8 X 1.25 X 20, Ss	5
17	1023307	(000000-)	Arm, Sqge, Side, Lh	2
18	71607	(000000-)	Bushing, Sleeve, 0.63b 0.72d 0.38l	3
19	81784	(000000-)	Cable, Glv .13d 015.8l .50eye /.50eye	1
20	360801	(000000-)	Sleeve, 0.31b 0.50d 0.3l, Ss	3
21	39308	(000000-)	Screw, Soc, M8 X 1.25 X 25, 12.9	1
22	41445	(000000-)	Screw, Soc, M8 X 1.25 X 35, 12.9	1
23	39349	(000000-)	Washer, Flat, 0.31 Sae	2
24	08709	(000000-)	Nut, Hex, Lock, M8 X 1.25, Nl	2
25	09028	(000000-)	Screw, Hex, M10 X 1.5 X 25, Ss	3
26	36328	(000000-)	Washer, Flat, Belleville, .50	1
27	1023314	(000000-)	Door Wldt, Brush, Lh	1
28	59195	(000000-)	Latch, Hook	1
29	09007	(000000-)	Screw, Hex, M6 X 1.0 X 25, Ss	2
30	41185	(000000-)	Washer, Flat, Belleville, .25	5
31	379870	(000000-)	Screw, Hex, M12 X 1.75 X 55, Ss	1
32	07788	(000000-)	Nut, Hex, Std, M12 X 1.75, Ss	1
33	41619	(000000-)	Washer, Flat, 0.56b 1.38d .11, Ss	1
34	1024576	(000000-)	Hinge, .50pin .19 4.0w 06.0l 3/0.44sl	1

Fig. 58 - Solution Tank Group

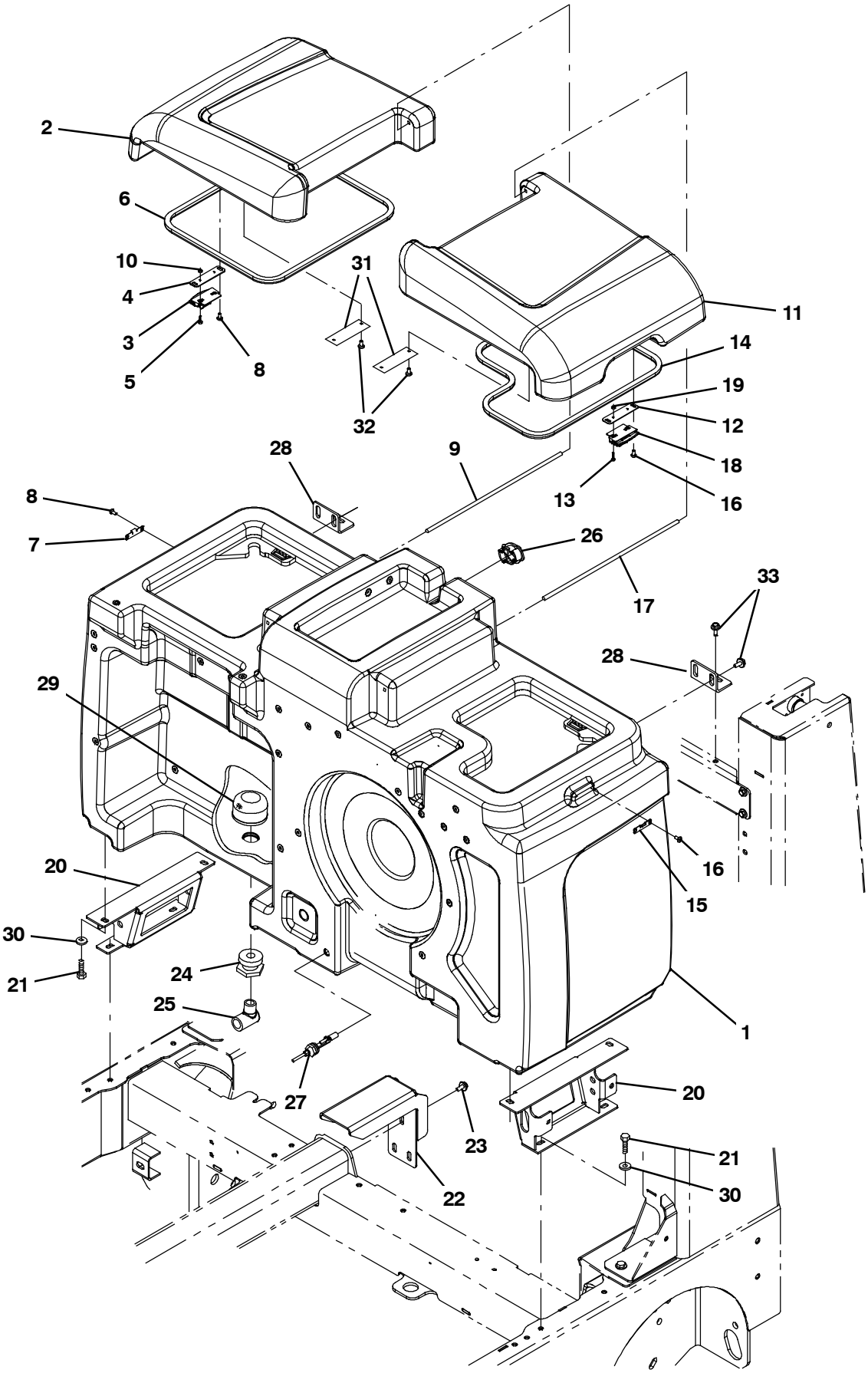

354622

Fig. 58 - Solution Tank Group

	Ref.	Part No.	Serial Number	Description	Qty.
	1	1033927	(000000-)	Tank, Soltn [M30]	1
▽	2	9003992	(000000-)	Cover Kit, Tank, Soltn, Rh, Replmt	1
▲	3	1030617	(000000-)	Latch, Cover	1
▲	4	1039757	(000000-)	Plate, Mtg, Latch	1
▲	5	19320	(002798-)	Screw, Pan, Phl, 06- 32 X 0.38, G1	2
▲	6	1040465	(000000-)	Seal, Bulb, Str, .50hi .50w 058.0l, Adh	1
▲	7	1029748	(000000-)	Bracket, Keeper, Latch	1
▲	8	382320	(000000-)	Screw, Pan, Phl, 12- 16 X 0.50, F/ Plstc	4
▲	9	1037495	(000000-)	Bar, Rnd, Plstc, 0.31d 17.0l	1
▲	10	19309	(000000-)	Nut, Hex, Std, 06- 32	2
▽	2	9003995	(000000-)	Cover Kit, Tank, Soltn, Rh, Replmt, (Ce & JP)	1
▲	3	1030617	(000000-)	Latch, Cover	1
▲	4	1039757	(000000-)	Plate, Mtg, Latch	1
▲	5	19320	(002798-)	Screw, Pan, Phl, 06- 32 X 0.38, G1	2
▲	6	1040465	(000000-)	Seal, Bulb, Str, .50hi .50w 058.0l, Adh	1
▲	7	1029748	(000000-)	Bracket, Keeper, Latch	1
▲	8	382320	(000000-)	Screw, Pan, Phl, 12- 16 X 0.50, F/ Plstc	4
▲	9	1037495	(000000-)	Bar, Rnd, Plstc, 0.31d 17.0l	1
▲	10	19309	(000000-)	Nut, Hex, Std, 06- 32	2
▽	11	9003994	(000000-)	Cover Kit, Tank, Soltn, Lh, Replmt	1
▲	12	1039757	(000000-)	Plate, Mtg, Latch	1
▲	13	19320	(002798-)	Screw, Pan, Phl, 06- 32 X 0.38, G1	2
▲	14	1040465	(000000-)	Seal, Bulb, Str, .50hi .50w 058.0l, Adh	1
▲	15	1029748	(000000-)	Bracket, Keeper, Latch	1
▲	16	382320	(000000-)	Screw, Pan, Phl, 12- 16 X 0.50, F/ Plstc	4
▲	17	1037495	(000000-)	Bar, Rnd, Plstc, 0.31d 17.0l	1
▲	18	1030617	(000000-)	Latch, Cover	1
▲	19	19309	(000000-)	Nut, Hex, Std, 06- 32	2
▽	10	9003996	(000000-)	Cover Kit, Tank, Soltn, Lh, Replmt, (Ce & JP)	1
▲	11	1030617	(000000-)	Latch, Cover	1
▲	12	1039757	(000000-)	Plate, Mtg, Latch	1
▲	13	19320	(002798-)	Screw, Pan, Phl, 06- 32 X 0.38, G1	2
▲	14	1040465	(000000-)	Seal, Bulb, Str, .50hi .50w 058.0l, Adh	1
▲	15	1029748	(000000-)	Bracket, Keeper, Latch	1
▲	16	382320	(000000-)	Screw, Pan, Phl, 12- 16 X 0.50, F/ Plstc	4
▲	17	1037495	(000000-)	Bar, Rnd, Plstc, 0.31d 17.0l	1
▲	18	1030617	(000000-)	Latch, Cover	1
▲	19	19309	(000000-)	Nut, Hex, Std, 06- 32	2
	20	1041477	(000000-)	Bracket, Mtg, Tank, Soltn	2
	21	09740	(000000-)	Screw, Hex, M8 X 1.25 X 20, Ss	8
	22	1034255	(000000-)	Bracket, Sppt, Tank, Cntr	1
	23	1037346	(000000-)	Screw, Hex, M8 X 1.25 X 25, 9.8, Sems	3
	24	377349	(000000-)	Fitting, Plstc, Pf12/Pf12, Bh	1
	25	69785	(000000-)	Fitting, Plstc, E90, Pf12/Pm12	1
	26	390994	(000000-)	Plug, Hole, Soltn Tank, Blk Pyu	1
	27	385685	(000000-)	Sensor, Level, Liq, 14vdc 01a .62- 11	1
	28	1020209	(000000-)	Angle, Sppt, Tank, Rear	2
	29	1027290	(000000-)	Filter, Soltn, 20mesh, Pm12 3.1d 02.6l	1

Continued

Fig. 58 - Solution Tank Group

Ref.	Part No.	Serial Number	Description	Qty.
30	1017218	(000000-)	Washer, Flat, 0.32B 1.00D .12, Ss	8
31	1017101	(000000-)	Plate, Label, Soltn Tank (ec- H20 only)	2
32	360973	(000000-)	Screw, Pan, 12- 16 X 0.50, F/ Plstc (ec- H20 only)	4
33	1020341	(000000-)	Screw, Hex, M8 X 1.25 X 20, Ss, Sems	4

Fig. 59 - Solution Tank Drain Group

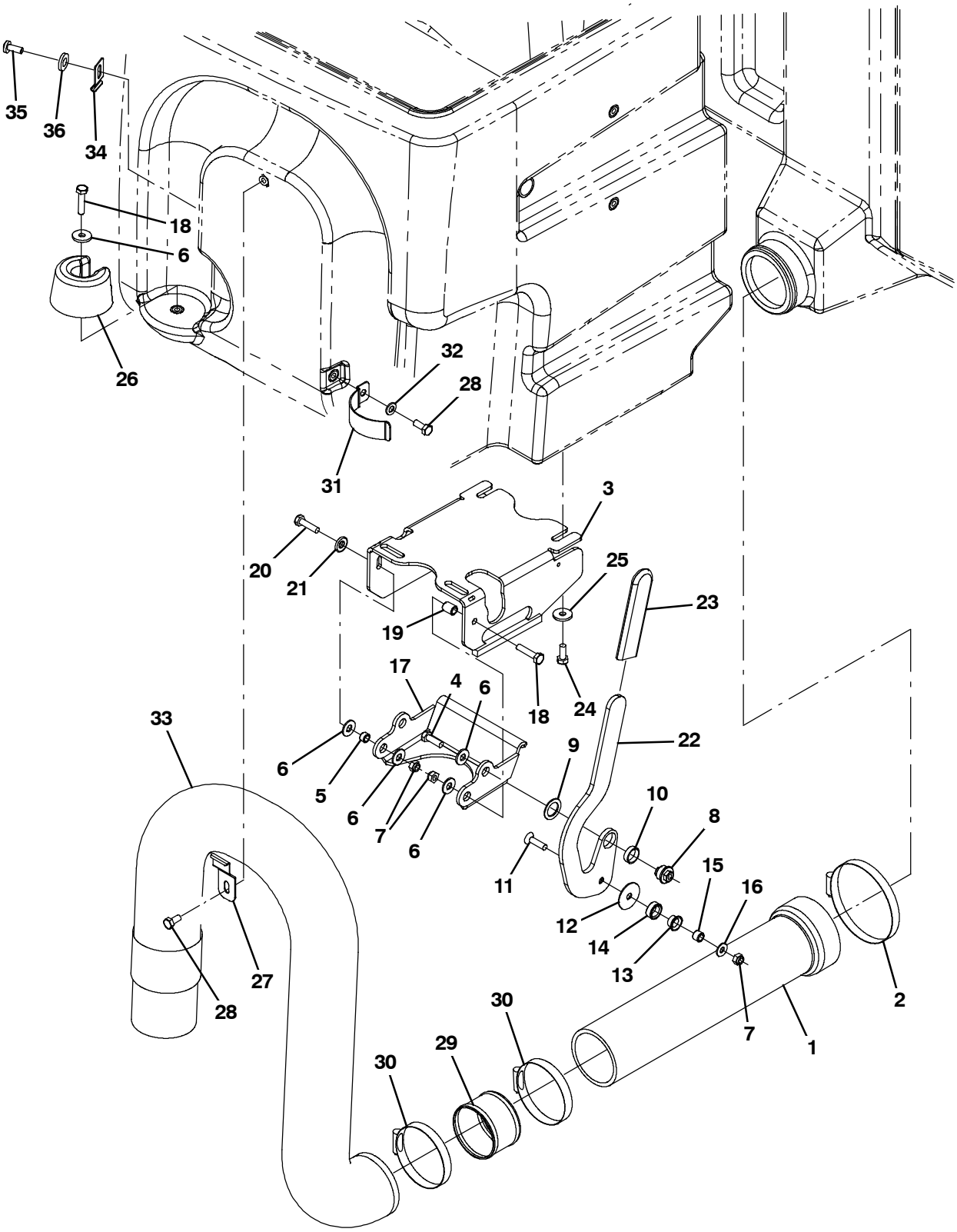

354623

Fig. 59 - Solution Tank Drain Group

Ref.	Part No.	Serial Number	Description	Qty.
1	9003793	(000000-)	Tube Kit, Tank, Soltn, Replmt	1
2	23498	(000000-)	Clamp, Hose, Wormdrive, 3.56- 4.50d, .50w	1
3	1042003	(000000-)	Mount Wldt, Valve, Pinch, Rh	1
4	39277	(000000-)	Screw, Hex, M8 X 1.25 X 25, 8.8	1
5	222516	(000000-)	Sleeve, P/M, 0.31b 0.50d 0.3l [430ss]	1
6	32491	(000000-)	Washer, Flat, 0.31, Std	5
7	08713	(000000-)	Nut, Hex, Lock, M8 X 1.25, Nl, Ss	3
8	1024599	(000000-)	Bushing, Eccentric, Adj	1
9	1026051	(000000-)	Washer, Flat, 0.79b 1.18d .06, Nyl	1
10	74090	(000000-)	Bushing, Sleeve, 0.75b 0.88d 0.25l	1
11	79506	(000000-)	Screw, Flt, Soc, M8 X 1.25 X 30, Ss	1
12	1028701	(000000-)	Washer, Thrust, 0.34b 1.50d .06	1
13	15648	(000000-)	Bushing, Flng, 0.50b 0.59d 0.38l	1
14	1028691	(000000-)	Roller, Brg	1
15	1028690	(000000-)	Tube, 0.32id 0.50od 00.4l, Ss	1
16	1017218	(000000-)	Washer, Flat, 0.32b 1.00d .12, Ss	1
17	1024535	(000000-)	Arm, Pinch	1
18	06955	(000000-)	Screw, Hex, M8 X 1.25 X 35, 8.8	2
19	80395	(000000-)	Sleeve, P/M, 0.31b 0.50d 0.7l [430ss]	1
20	76570	(000000-)	Screw, Hex, M8 X 1.25 X 30, 8.8	1
21	41186	(000000-)	Washer, Flat, Belleville, .31	1
22	1026727	(000000-)	Handle, Valve, Pinch, Rh	1
23	1023502	(000000-)	Grip, Handle	1
24	09740	(000000-)	Screw, Hex, M8 X 1.25 X 20, Ss	4
25	1017218	(000000-)	Washer, Flat, 0.32b 1.00d .12, Ss	4
26	1022137	(000000-)	Plug, Hose, Pyu	1
27	1025480	(000000-)	Bracket, Retaining, Hose	1
28	15675	(000000-)	Screw, Hex, M8 X 1.25 X 16, Ss	2
29	1041953	(000000-)	Tube, 2.90Id 3.00OD 02.4L, Ss	2
30	43555	(000000-)	Clamp, Hose, Wormdrive, 2.50- 3.50d, .50w	2
31	1024558	(000000-)	Strap, Retaining, Hose	1
32	39349	(000000-)	Washer, Flat, 0.31, Sae	1
33	1019424	(000000-)	Hose, Drain, 3.00id X 48.0l	1
34	1043214	(000000-)	Bracket, Retain, Hose	1
35	17284	(000000-)	Screw, Btn, M8 X 1.25 X 16, Ss	1
36	01685	(000000-)	Washer, Flat, 0.38B 0.88D .08, Ss	1

Fig. 60 - Solution Control Group

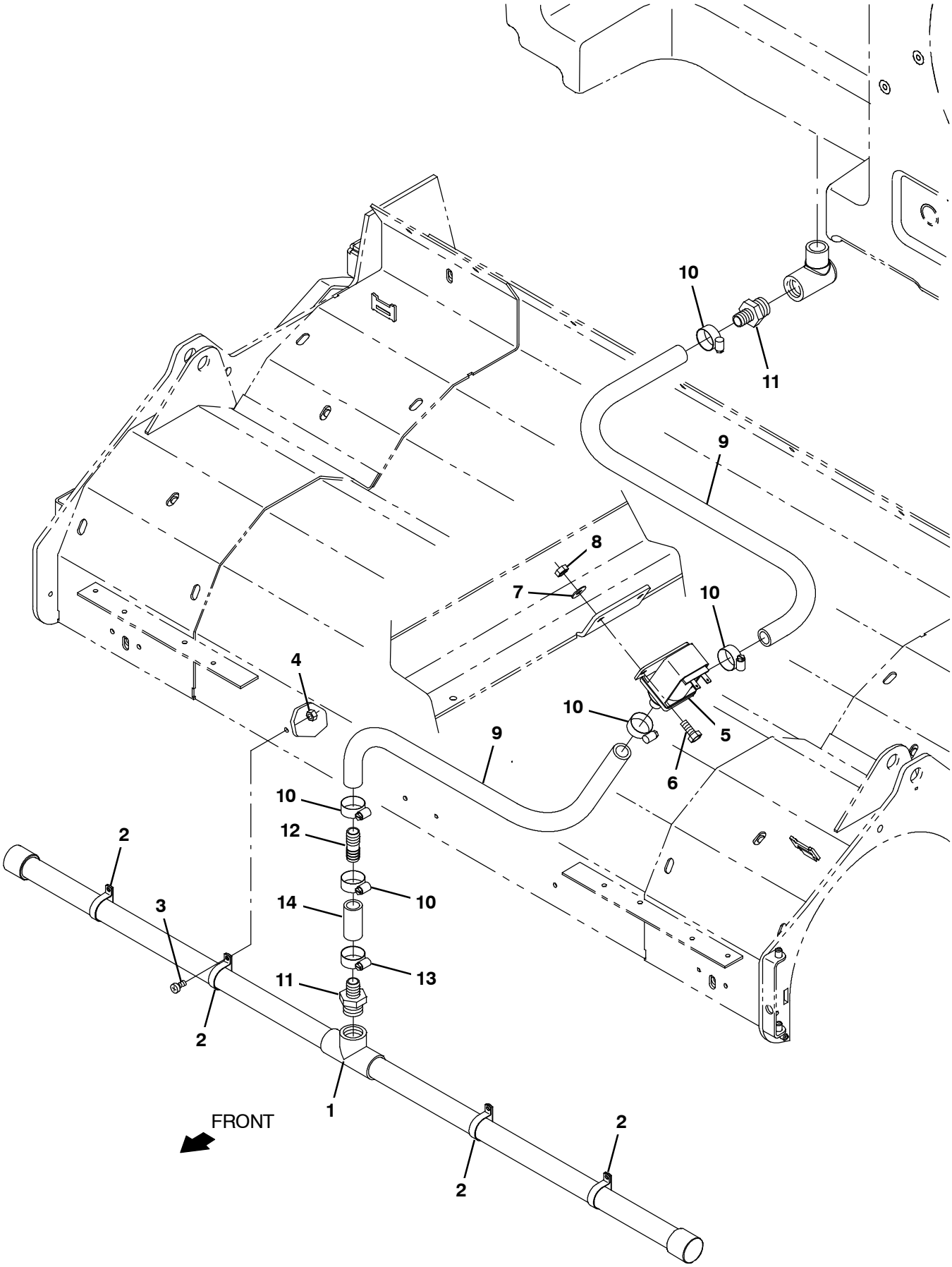

354624

Fig. 60 - Solution Control Group

Ref.	Part No.	Serial Number	Description	Qty.
1	1038116	(000000-)	Tube, Distribution, Water, 45.0l	1
2	50544	(000000-)	Clamp, Cable, Ss, 1.12d X 0.38w, 1hole	4
3	09200	(000000-)	Screw, Pan, Phl, M5 X 0.80 X 12, Ss	4
4	09739	(000000-)	Nut, Hex, Lock, M5 X 0.80, Nl, Ss	4
5	1067700	(000000-)	Valve Assy, Water, Solenoid , 12vdc	1
6	08716	(000000-)	Screw, Hex, M6 X 1.00 X 20, Ss	2
7	01684	(000000-)	Washer, Flat, 0.27b 0.69d .05, Ss	2
8	08712	(000000-)	Nut, Hex, Lock, M6 X 1.00, Nl, Ss	2
9	1015045	(000000- 004690)	Hose, Afmkt, Pvc, Brd, 0.75id, 08ft, Clr	1
9	1015032	(004691-)	Hose, Afmkt, Pvc, Brd, 0.62id, 08ft, Clr	1
10	63810	(000000-)	Clamp, Hose, Wormdrive, 0.56- 1.06d, .56w	5
11	79273- 2	(000000- 004690)	Fitting, Plstc, Str, Bm12/Pm12	2
11	365095	(004691-)	Fitting, Plstc, Str, Bm10/Pm12	2
12	365164	(004691-)	Fitting, Plstc, Str, Bm10/Bm10	1
13	63810	(004691-)	Clamp, Hose, Wormdrive, 0.56- 1.06d, .56w	1
14	1015033	(004691-)	Hose, Afmkt, Pvc, Brd, 0.62id, 01ft, Clr	1

Fig. 61 - Recovery Tank Group

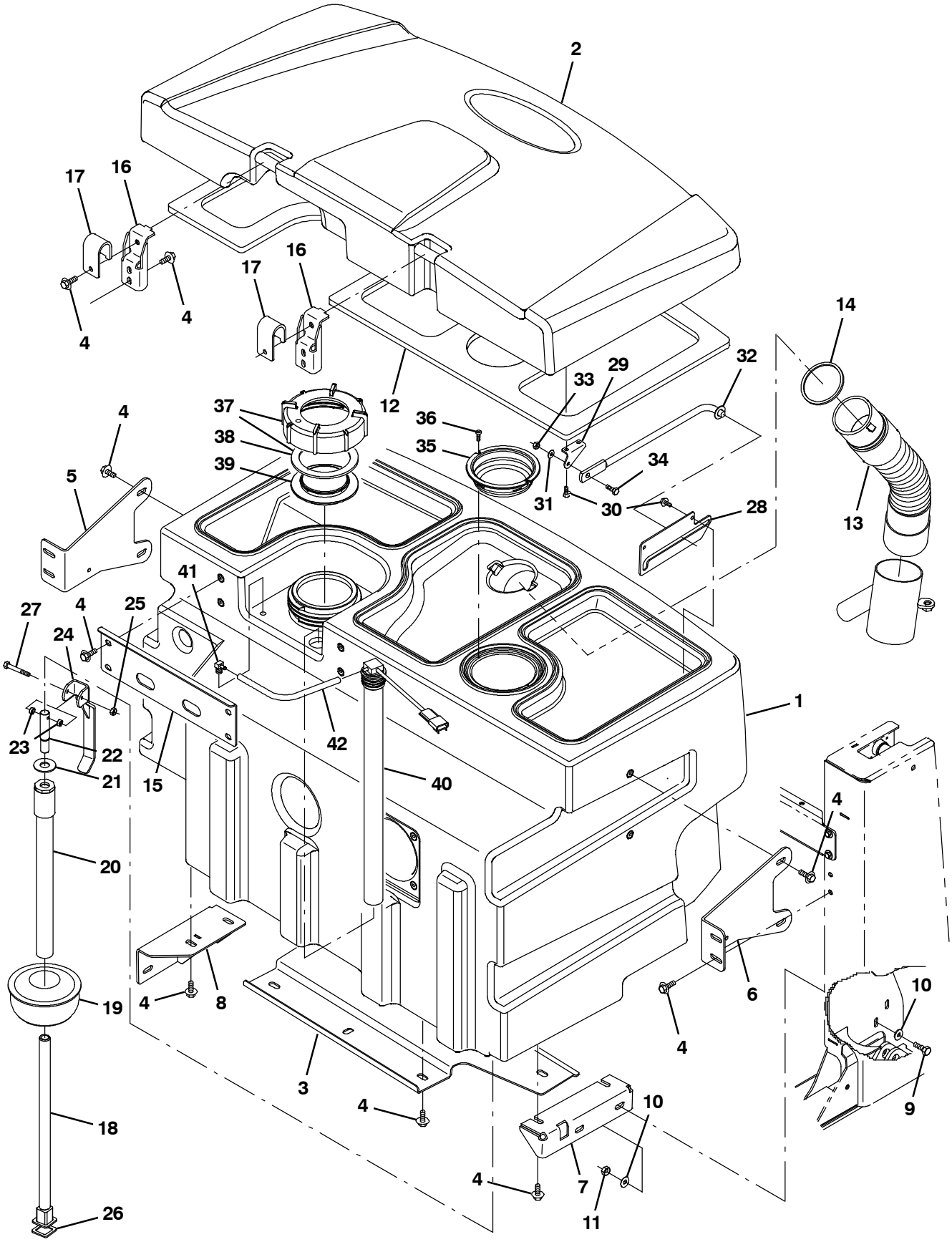

354625

Fig. 61 - Recovery Tank Group

	Ref.	Part No.	Serial Number	Description	Qty.
	1	1033928	(000000-)	Tank, Recvy	1
	2	1034869	(000000-)	Cover, Tank, Recvy	1
	3	1035039	(000000-)	Plate, Tank, Bottom	1
	4	1020341	(000000-)	Screw, Hex, M8 X 1.25 X 20, Ss, Sems	25
	5	1038941	(000000-)	Bracket, Sppt, Tank, Rh	1
	6	1038927	(000000-)	Bracket, Sppt, Tank, Lh	1
	7	1034436	(000000-)	Bracket, Mtg, Lh, Tank, Recvy	1
	8	1034444	(000000-)	Bracket Wldt, Mtg, Rh	1
	9	09010	(000000-)	Screw, Hex, M8 X 1.25 X 25, Ss	4
	10	32491	(000000-)	Washer, Flat, 0.31, Std	8
	11	08713	(000000-)	Nut, Hex, Lock, M8 X 1.25, Nl, Ss	4
	12	1037085	(000000-)	Gasket, Cover, Recvy Tank	1
	13	1031610	(000000-)	Hose Assy, Sqge	1
	14	1021920	(000000-)	Gasket, Ure, .16, 3.23id 3.63od	1
	15	1021090	(000000-)	Plate, Sppt, Tank	1
	16	1039072	(000000-)	Bracket, Sppt, Cover, Tank, Recvy	2
	17	1039049	(000000-)	Bracket, Mtg, Cover, Recvy Tank	2
▽		9003313	(000000-)	Plug Kit, Drain, Recvy, Ci	1
▲	18	1028328	(000000-)	Tube Wldt, Plug, Drain	1
▲	19	1022370	(000000-)	Plug, Drain, Expandable, 4.75- 6.00	1
▲	20	1072885	(000000-)	Tube Assy, Plug, Drain	1
▲	21	1028522	(000000-)	Washer, Flat, 0.78b 1.75d .18, Ss	1
▲	22	1028173	(000000-)	Pin, Lift, Drain	1
▲	23	360801	(000000-)	Sleeve, 0.31b 0.50d 0.3l, Ss	2
▲	24	1028211	(000000-)	Handle Wldt, Drain	1
▲	25	08712	(000000-)	Nut, Hex, Lock, M6 X 1.00, Nl, Ss	1
▲	26	1035044	(000000-)	Seal, Shaft, Drain Plug	1
▲	27	58979	(000000-)	Screw, Hex, M6 X 1.00 X 55, Fl, Ss	1
	28	1025620	(000000-)	Plate, Mtg, Prop Rod	1
	29	1025619	(000000-)	Bracket, Mtg, Prop Rod	1
	30	1046798	(000000-)	Screw, Hex, .25- 10 X 0.75, Fmg/A, Ss	4
	31	01684	(000000-)	Washer, Flat, 0.27b 0.69d .05, Ss	1
	32	54615	(000000-)	Arm Wldt, Safety, Sppt, Seat, .38d 10.1l	1
	33	08712	(000000-)	Nut, Hex, Lock, M6 X 1.00, Nl, Ss	1
	34	08716	(000000-)	Screw, Hex, M6 X 1.00 X 20, Ss	1
	35	1026014	(000000-)	Screen, Vacuum	1
	36	382320	(000000-)	Screw, Pan, Phl, 12- 16 X 0.50, F/ Plstc	2
▽	37	24358	(000000-)	Cap Assy, Tank, Drain	1
▲	38	1031699	(000000-)	Gasket, .19, 4.05id 5.29od [Buna]	1
	39	86636	(000000-)	Cover, Tank	1
	40	1072878	(000000-)	Switch Assy, Press, 13.0, 17.5l Tube	1
	41	32183	(000000-)	Fitting, Brs, E90, Bm03/Pm02	1
	42	1031572	(000000-)	Hose, Afmkt, Vacuum, 0.16id, 01ft	1

Fig. 62 - Recovery Tank Drain Group

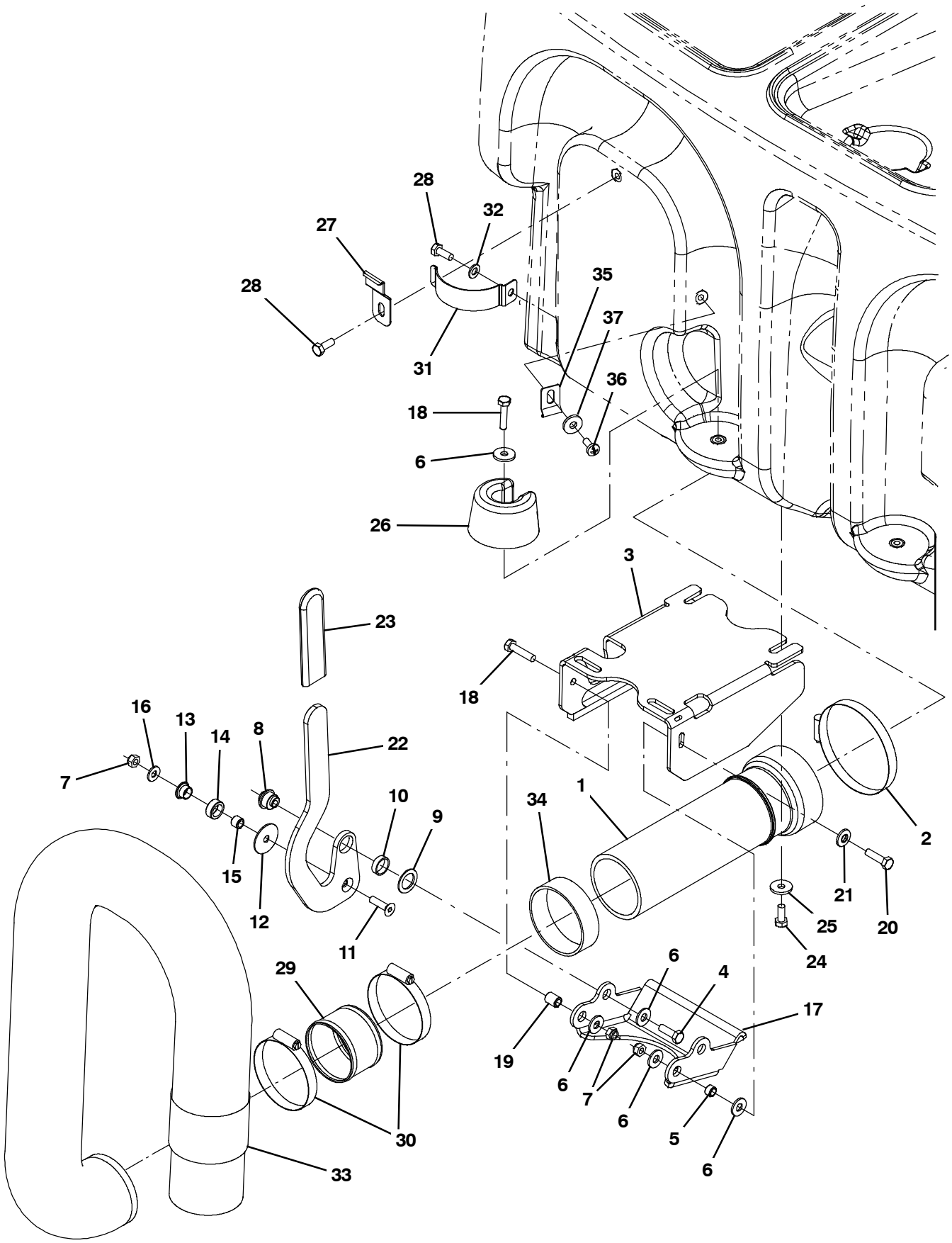

354626

Fig. 62 - Recovery Tank Drain Group

Ref.	Part No.	Serial Number	Description	Qty.
1	9003794	(000000-)	Tube Kit, Tank, Recvy, Replmt	1
2	23498	(000000-)	Clamp, Hose, Wormdrive, 3.56- 4.50d, .50w	1
3	1042010	(000000-)	Mount Wldt, Valve, Pinch, Lh	1
4	39277	(000000-)	Screw, Hex, M8 X 1.25 X 25, 8.8	1
5	222516	(000000-)	Sleeve, P/M, 0.31b 0.50d 0.3l [430ss]	1
6	32491	(000000-)	Washer, Flat, 0.31, Std	5
7	08713	(000000-)	Nut, Hex, Lock, M8 X 1.25, Nl, Ss	3
8	1024599	(000000-)	Bushing, Eccentric, Adj	1
9	1026051	(000000-)	Washer, Flat, 0.79b 1.18d .06, Nyl	1
10	74090	(000000-)	Bushing, Sleeve, 0.75b 0.88d 0.25l	1
11	79506	(000000-)	Screw, Flt, Soc, M8 X 1.25 X 30, Ss	1
12	1028701	(000000-)	Washer, Thrust, 0.34b 1.50d .06	1
13	15648	(000000-)	Bushing, Flng, 0.50b 0.59d 0.38l	1
14	1028691	(000000-)	Roller, Brg	1
15	1028690	(000000-)	Tube, 0.32id 0.50od 00.4l, Ss	1
16	1017218	(000000-)	Washer, Flat, 0.32b 1.00d .12, Ss	1
17	1024535	(000000-)	Arm, Pinch	1
18	06955	(000000-)	Screw, Hex, M8 X 1.25 X 35, 8.8	2
19	80395	(000000-)	Sleeve, P/M, 0.31b 0.50d 0.7l [430ss]	1
20	76570	(000000-)	Screw, Hex, M8 X 1.25 X 30, 8.8	1
21	41186	(000000-)	Washer, Flat, Belleville, .31	1
22	1027039	(000000-)	Handle, Valve, Pinch, Lh	1
23	1023502	(000000-)	Grip, Handle	1
24	09740	(000000-)	Screw, Hex, M8 X 1.25 X 20, Ss	4
25	1017218	(000000-)	Washer, Flat, 0.32b 1.00d .12, Ss	4
26	1022137	(000000-)	Plug, Hose, Pyu	2
27	1025480	(000000-)	Bracket, Retaining, Hose	1
28	15675	(000000-)	Screw, Hex, M8 X 1.25 X 16, Ss	2
29	1041953	(000000-)	Tube, 2.90Id 3.00OD 02.4L, Ss	1
30	43555	(000000-)	Clamp, Hose, Wormdrive, 2.50- 3.50d, .50w	2
31	1024558	(000000-)	Strap, Retaining, Hose	1
32	39349	(000000-)	Washer, Flat, 0.31, Sae	1
33	1019424	(000000-)	Hose, Drain, 3.00id X 48.0l	1
34	1031309	(000000-)	Tube, Acrylic, Clr, 3.25id 3.50od 01.0l	1
35	1043214	(000000-)	Bracket, Retain, Hose	1
36	17284	(000000-)	Screw, Btn, M8 X 1.25 X 16, Ss	1
37	01685	(000000-)	Washer, Flat, 0.38B 0.88D .08, Ss	1

Fig. 63 - Vacuum Fan Group, Scrubbing (000000-004454)

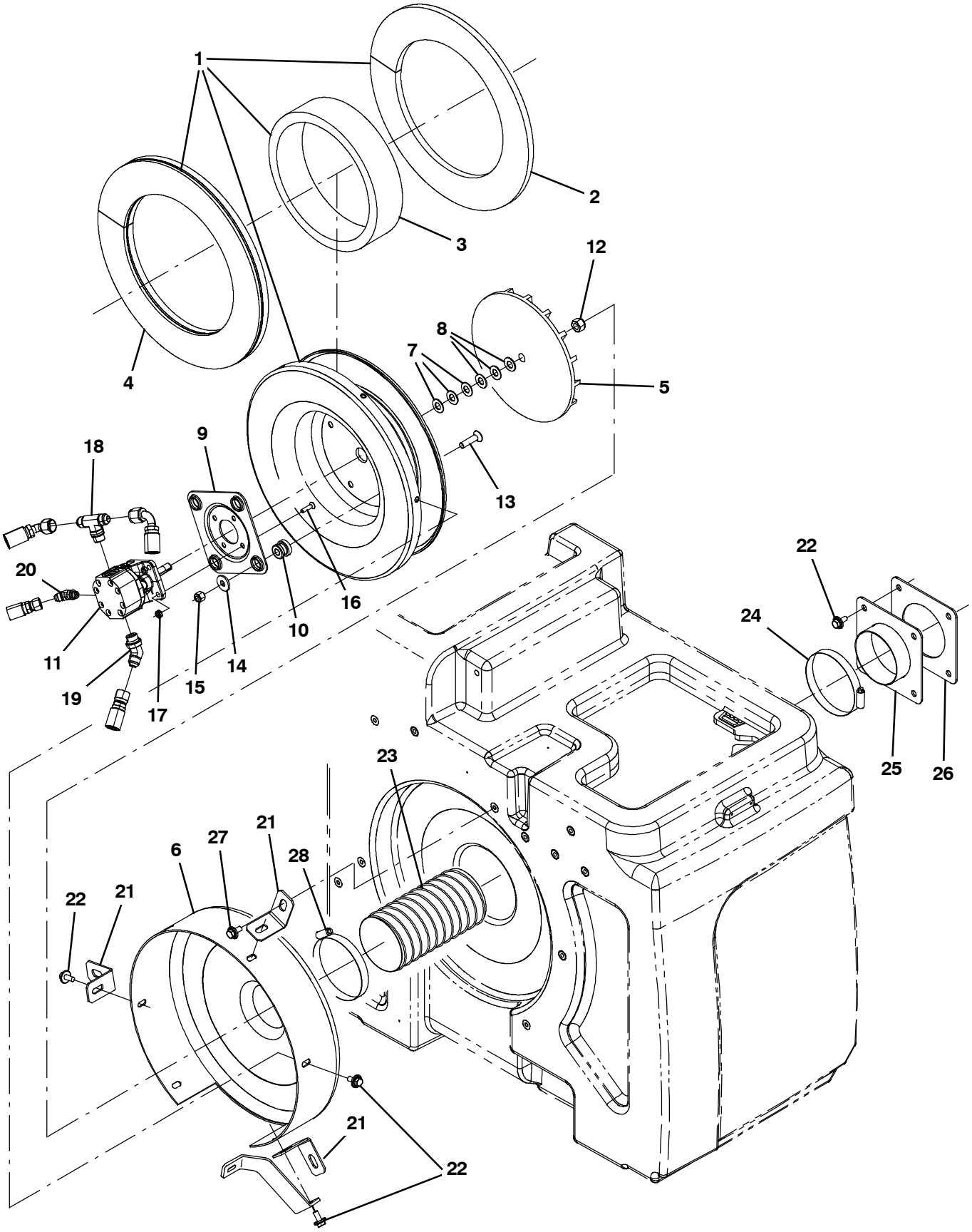

354627 - M30

Fig. 63 - Vacuum Fan Group, Scrubbing (000000-004453)

	Ref.	Part No.	Serial Number	Description	Qty.
▽		9003455	(000000-004453)	Fan Kit, Scrub, Replmt [M20&T20]	1
▲▽	1	9002684	(000000-004453)	Housing Assy, Vacfan, Scrbr	1
▲▲	2	1025888	(000000-004453)	Insulation, Flame-Retardant, 0.50	1
▲▲	3	1025887	(000000-004453)	Insulation, Flame-Retardant, 0.75-0.88	1
▲▲	4	1025872	(000000-004453)	Insulation, Flame-Retardant, 0.75-0.88	1
▲	5	03922	(000000-004453)	Impeller, 9.5d, 18 Bl	1
▲	6	57189	(000000-004453)	Housing Wldt, Vacfan, Front [528]	1
▲	7	75456-3	(000000-004453)	Shim, Washer, 0.88d 0.51b .020	3
▲	8	75456-4	(000000-004453)	Shim, Washer, 0.88d 0.51b .060	3
▲	9	54275A	(000000-004453)	Bracket, Mtg, Motor	1
▲	10	54274	(000000-004453)	Isolator, Vib, Bshg, 1.1d 0.6l .4b 0.78h	4
▲▽	11	9003461	(000000-004453)	Motor Kit, Replmt	1
▲▲		00954	(000000-004453)	Key, Sq, 0.12 X 0.12, 1.00l	1
▲▲		74233	(000000-004453)	Seal Kit, Motor, Hyd, Gear [Barns]	1
▲▲	12	41130	(000000-004453)	Nut, Low Crown, .50-20	1
▲▲	13	54861	(000000-004453)	Screw, Flt, Soc, .38-16 X 1.50, Al	4
▲▲	14	1014563	(000000-004453)	Washer, Flat, 0.40b 1.12d .12, Ss	4
▲▲	15	36643	(000000-004453)	Nut, Hex, Lock, .38-16, Nl, Thin	4
▲▲	16	39534	(000000-004453)	Screw, Flt, Soc, .25-20 X 1.00, Al	4
▲▲	17	32981	(000000-004453)	Nut, Hex, Lock, .25-20, Nl	4
▲▲	18	49933	(000000-004453)	Fitting, Hyd, Tee, Jm08/Jm08/Om08, Br	1
▲▲	19	42226	(000000-004453)	Fitting, Hyd, E45, Jm08/Om08	1
▲▲	20	392609	(000000-004453)	Fitting, Hyd, E45, Jm06/Om04	1
▲	21	1020320	(000000-004453)	Angle, Sppt, Fan	3
▲	22	1020341	(000000-004453)	Screw, Hex, M8 X 1.25 X 20, Ss, Sems	10
	23	1022377	(000000-004453)	Hose, Flex, 4.00d, 24.0l	1
	24	79380	(000000-004453)	Clamp, Hose, Wormdrive, 3.75-4.62d, .62w	1
	25	1023754	(000000-004453)	Plate Wldt, Hose, Vacuum	1
	26	1024853	(000000-004453)	Gasket, Plt, Hose, Vacuum	1
	27	1037346	(000000-004453)	Screw, Hex, M8 X 1.25 X 25, 9.8, Sems	3
	28	23498	(000000-004453)	Clamp, Hose, Wormdrive, 3.56-4.50D, .50W	1

Fig. 64 - Vacuum Fan Group, Scrubbing (004455-)

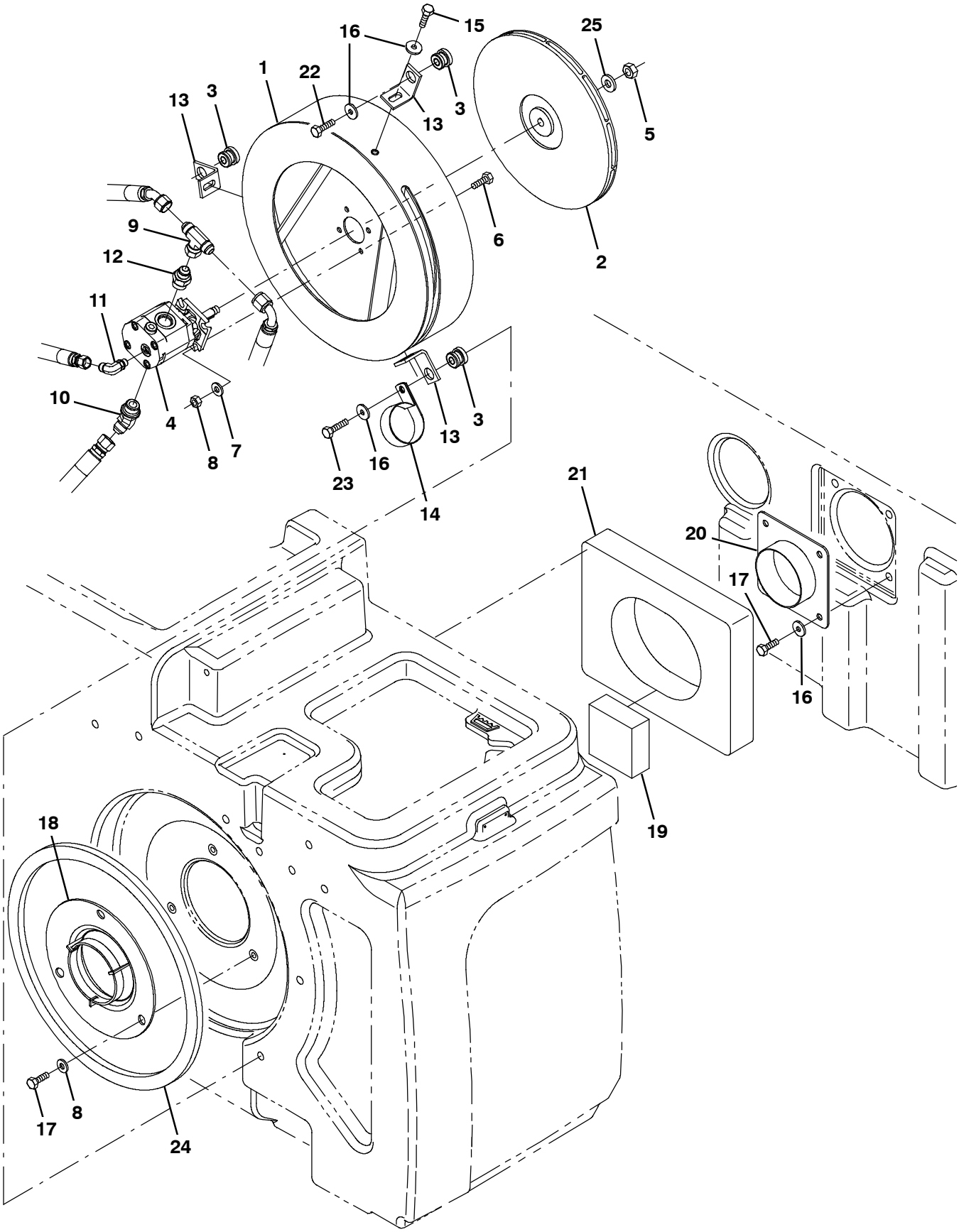

356557 - M30

Fig. 64 - Vacuum Fan Group, Scrubbing (004455-)

Ref.	Part No.	Serial Number	Description	Qty.
1	1068611	(004455-)	Plate Wldt, Mtg, Fan	1
2	1062033	(004455-)	Impeller, 11.81d X 0.500b	1
3	54274	(004455-)	Isolator, Vib, Bshg, 1.1d 0.6l .4b 0.78h	3
4	1071253	(004455-)	Motor, Hyd, Gear, Ext 0.17 Lh 3000	1
5	07788	(004455-)	Nut, Hex, Std, M12 X 1.75, Ss	1
6	09010	(004455-)	Screw, Hex, M8 X 1.25 X 25, Ss	4
7	01685	(004455-)	Washer, Flat, 0.38b 0.88d .08, Ss	7
8	08713	(004455-)	Nut, Hex, Lock, M8 X 1.25, Nl, Ss	4
9	76315	(004455-)	Fitting, Hyd, Tee, Jf08/Jm08/Jm08, Br	1
10	47513	(004455-)	Fitting, Hyd, E45, Jm08/Om10	1
11	77098	(004455-)	Fitting, Hyd, E90, Jm06/Om04	1
12	56692	(004455-)	Fitting, Hyd, Str, Jm08/Om10	1
13	1068644	(004455-)	Angle, Sppt, Fan	3
14	70157	(004455-)	Clamp, Cable, Ss, 2.50d X 1.00w, 1hole	1
15	39277	(004455-)	Screw, Hex, M8 X 1.25 X 25, 8.8	3
16	1017218	(004455-)	Washer, Flat, 0.32b 1.00d .12, Ss	10
17	09740	(004455-)	Screw, Hex, M8 X 1.25 X 20, Ss	7
18	1059100	(004455-)	Housing, Fan, Radial Discharge, Sq Inlet	1
19	1074415	(004455-)	Gasket, 1.50, 03.75w, 03.75l, Adh	1
20	1023754	(004455-)	Plate Wldt, Hose, Vacuum	1
21	1074414	(004455-)	Gasket, 2.00, 10.00w, 13.00l, Adh	1
22	09011	(004455-)	Screw, Hex, M8 X 1.25 X 30, Ss	2
23	09023	(004455-)	Screw, Hex, M8 X 1.25 X 35, Fl, Ss	1
24	1068613	(004455-)	Gasket, Foam, .50, 14.76id 16.54od, Adh	1
25	36328	(004455-)	Washer, Flat, Belleville, .50	1

Fig. 65 - Vacuum Fan Group, Sweeping

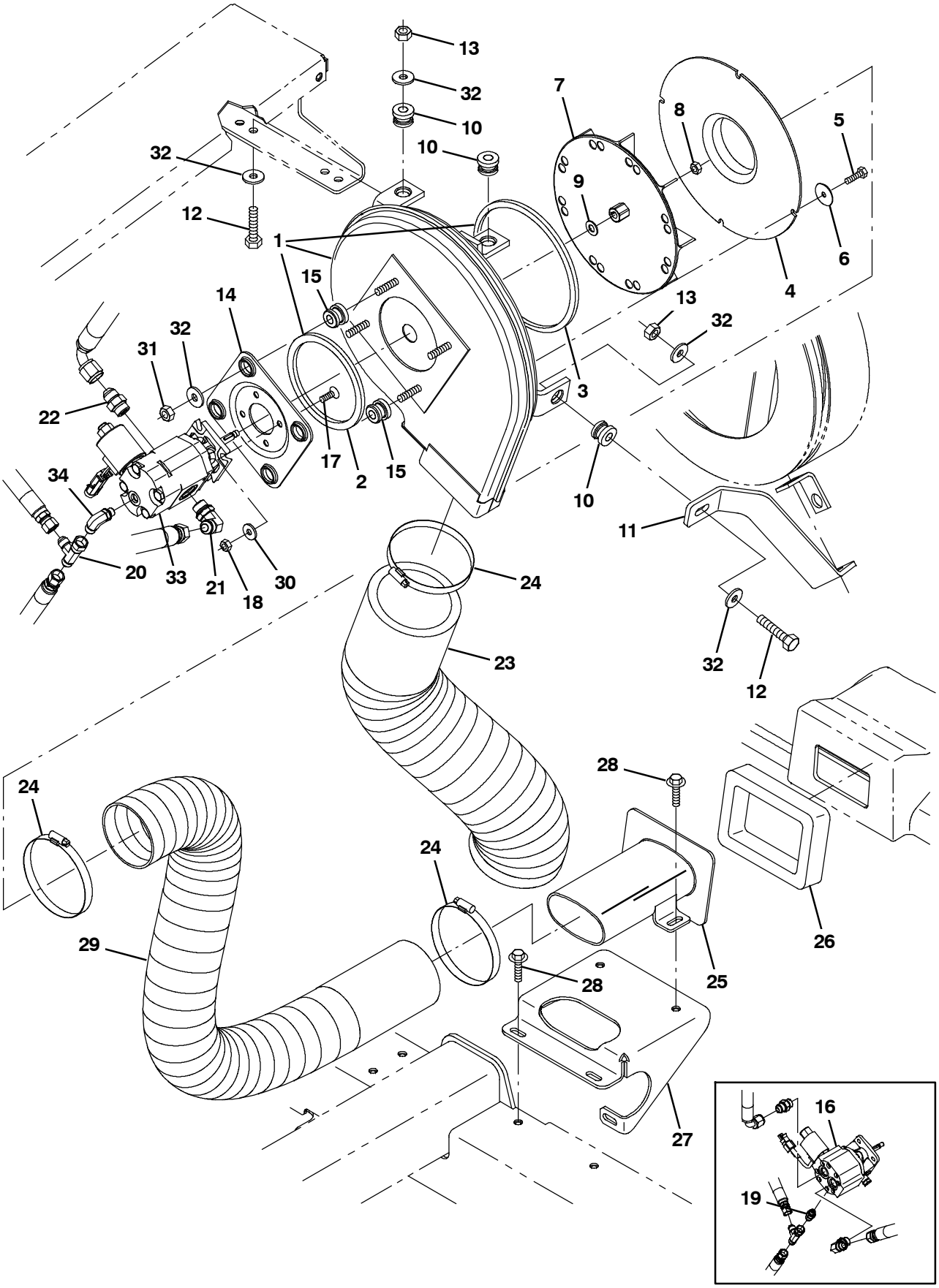

354628 - M30

Fig. 65 - Vacuum Fan Group, Sweeping

	Ref.	Part No.	Serial Number	Description	Qty.
▽	1	9002683	(000000-)	Housing Assy, Vacfan, Swpr	1
▲	2	59967	(000000-)	Seal, Ure, 0.38, 0.75w 13.2l Adh	1
▲	3	59735	(000000-)	Seal, Ure, 0.38, 0.75w 33.0l Adh	1
	4	1018216	(000000-)	Plate, Inlet	1
	5	34323	(000000-)	Screw, Hex, .25- 20 X 0.75, Nl	4
	6	41178	(000000-)	Washer, Flat, 0.25, Fendr	4
	7	74454	(000000-)	Impeller, 9.00d X 1.40w X 0.376b	1
	8	31241	(000000-)	Nut, Hex, Lock, .31- 24, Nl, Thin	1
	9	32485	(000000-)	Washer, Flat, 0.38, Sae	1
	10	59649	(000000-)	Isolator, Vib, Bshg, 1.1d 0.6l .4b 0.78h	3
	11	1037993	(000000-)	Bar, Isolator, Vacfan	1
	12	39285	(000000-)	Screw, Hex, M10 X 1.50 X 40, 8.8	3
	13	41430	(000000-)	Nut, Hex, Lock, M10 X 1.5, Nl	3
	14	54275A	(000000-)	Bracket, Mtg, Motor	1
	15	54274	(000000-)	Isolator, Vib, Bshg, 1.1d 0.6l .4b 0.78h	4
	16	53485	(000000- 004454)	Motor, Hyd, Gear, Ext 0.19 Rh 3000 (See Breakdowns)	1
	17	39534	(000000-)	Screw, Flt, Soc, .25- 20 X 1.00, Al	4
	18	32981	(000000-)	Nut, Hex, Lock, .25- 20, Nl	4
	19	50960	(000000- 004454)	Fitting, Hyd, Str, Jm06/Om04	1
	20	42215	(000000-)	Fitting, Hyd, Tee, Jf06/Jm06/Jm06, Run	1
	21	44868	(000000-)	Fitting, Hyd, E90, Jm08/Om08	1
	22	44869	(000000-)	Fitting, Hyd, Str, Jm08/Om08	1
	23	1025756	(000000-)	Muffler, Vacfan, 4.0id	1
	24	23498	(000000-)	Clamp, Hose, Wormdrive, 3.56- 4.50d, .50w	3
	25	1025841	(000000-)	Duct, Vacfan, Casting	1
	26	1018209	(000000-)	Gasket, Neo, 1.25, 04.45w 06.42l, Adh	1
	27	1035260	(000000-)	Channel, Inlet	1
	28	1037346	(000000-)	Screw, Hex, M8 X 1.25 X 25, 9.8, Sems	5
	29	1035703	(000000-)	Hose, Flex, Vacuum, 03.5d, 040.0l	1
	30	32483	(004455-)	Washer, Flat, 0.25, Sae	4
	31	36643	(000000-)	Nut, Hex, Lock, .38- 16, Nl, Thin	4
	32	1014563	(000000-)	Washer, Flat, 0.40b 1.12d .12, Ss	10
	33	1071240	(004455-)	Motor, Hyd, Gear, Ext 0.17 Lh 3000	1
	34	77098	(004455-)	Fitting, Hyd, E90, Jm06/Om04	1

Fig. 66 - Hydraulic Schematic (000000-001462)

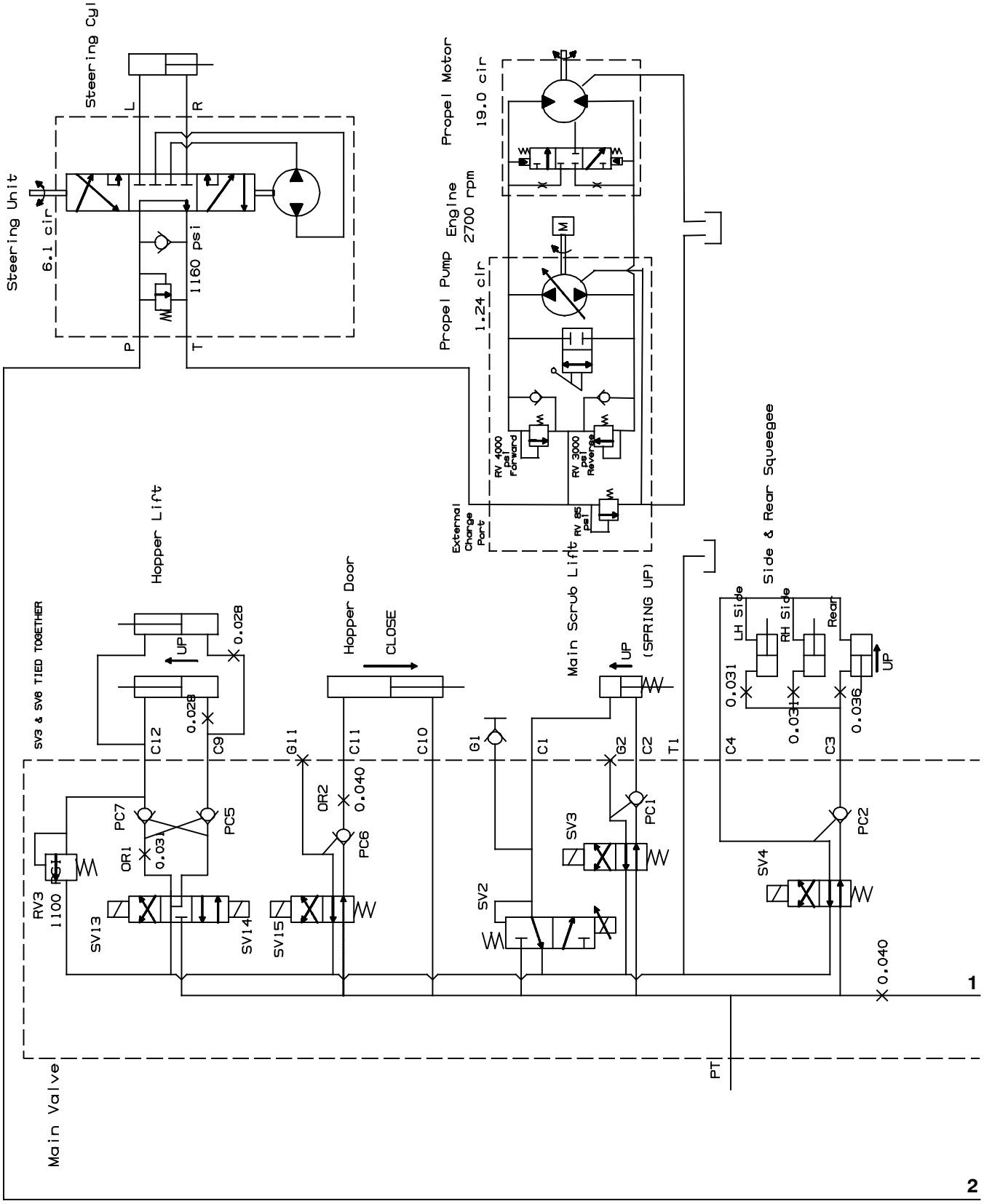

354453, 1034888 - M30

Fig. 66 - Hydraulic Schematic (000000-001462)

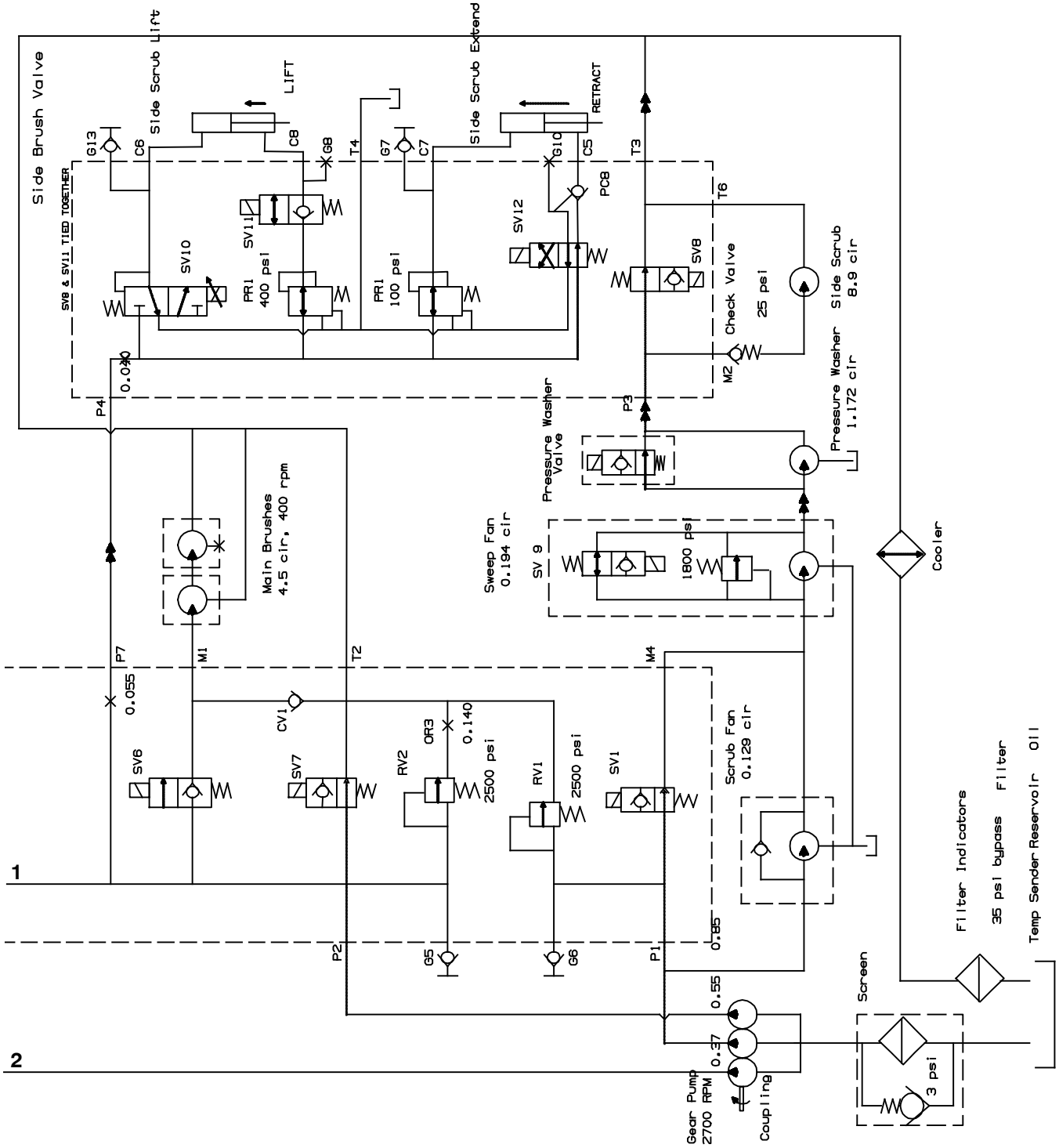

354453, 1034888 - M30

Fig. 67 - Hydraulic Schematic (001463-)

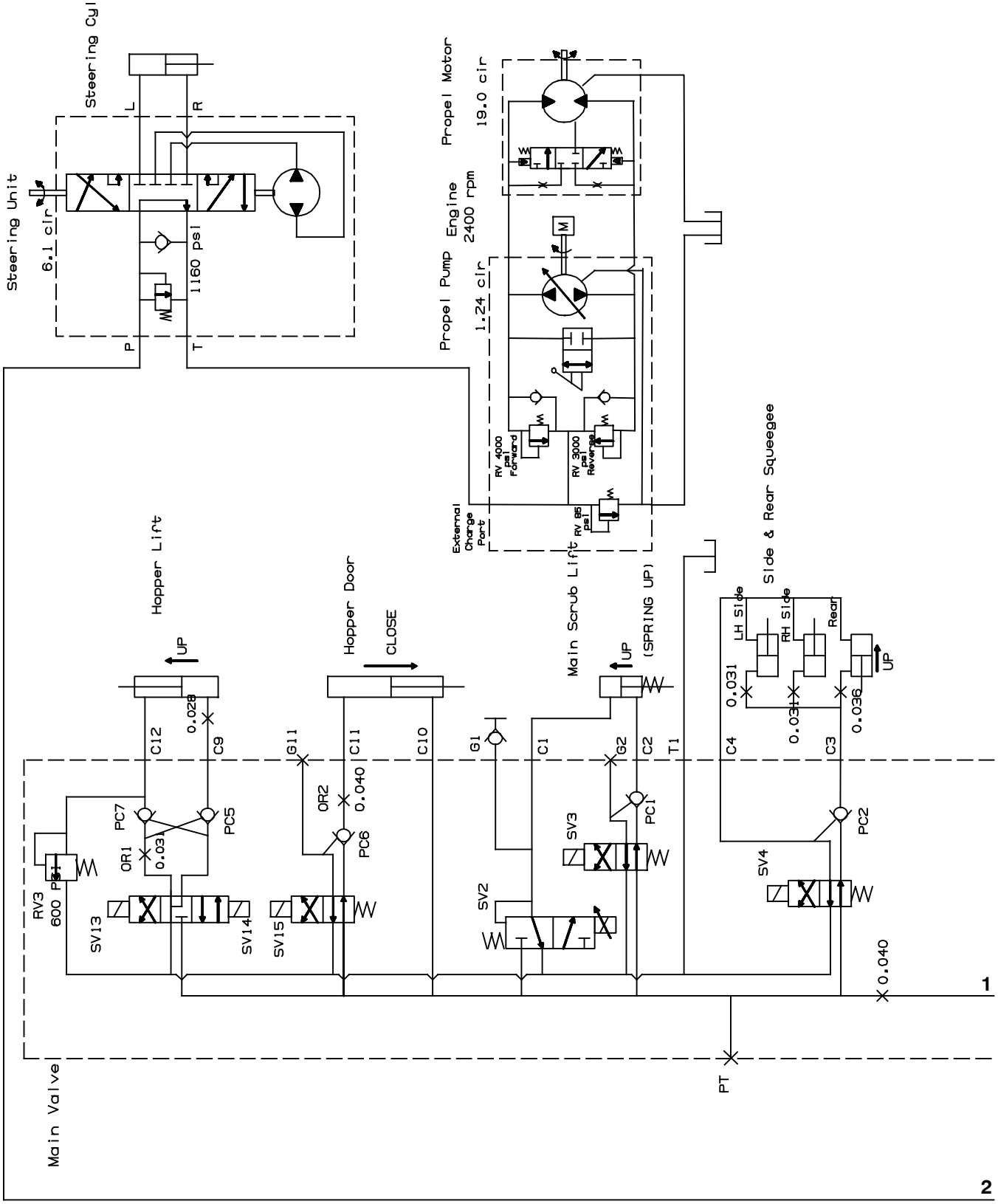

354453, 1034888 - M30

Fig. 67 - Hydraulic Schematic (001463-)

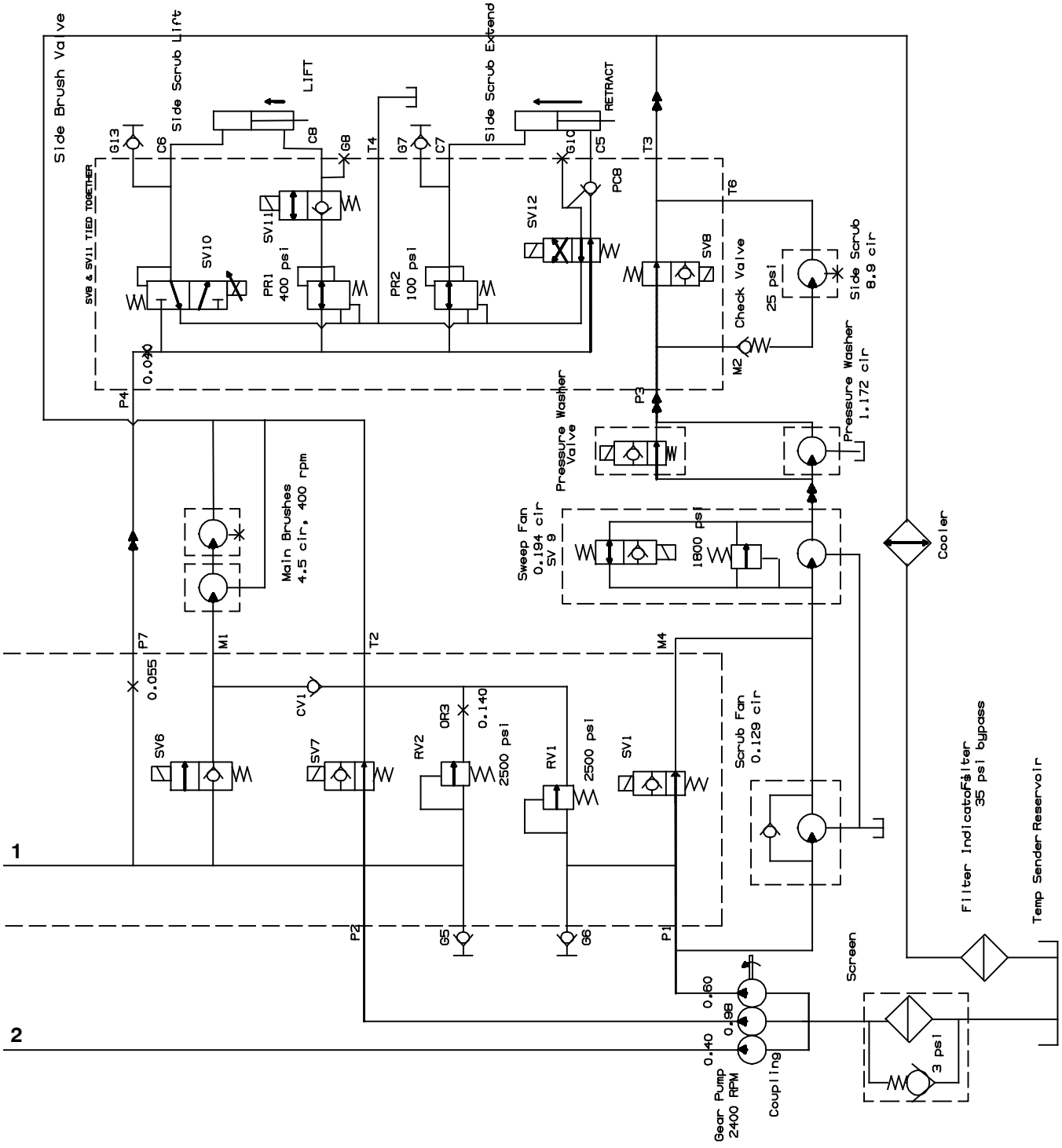

354453, 1034888 - M30

Fig. 68 - Hydraulic Hose Group, Steering and Propel

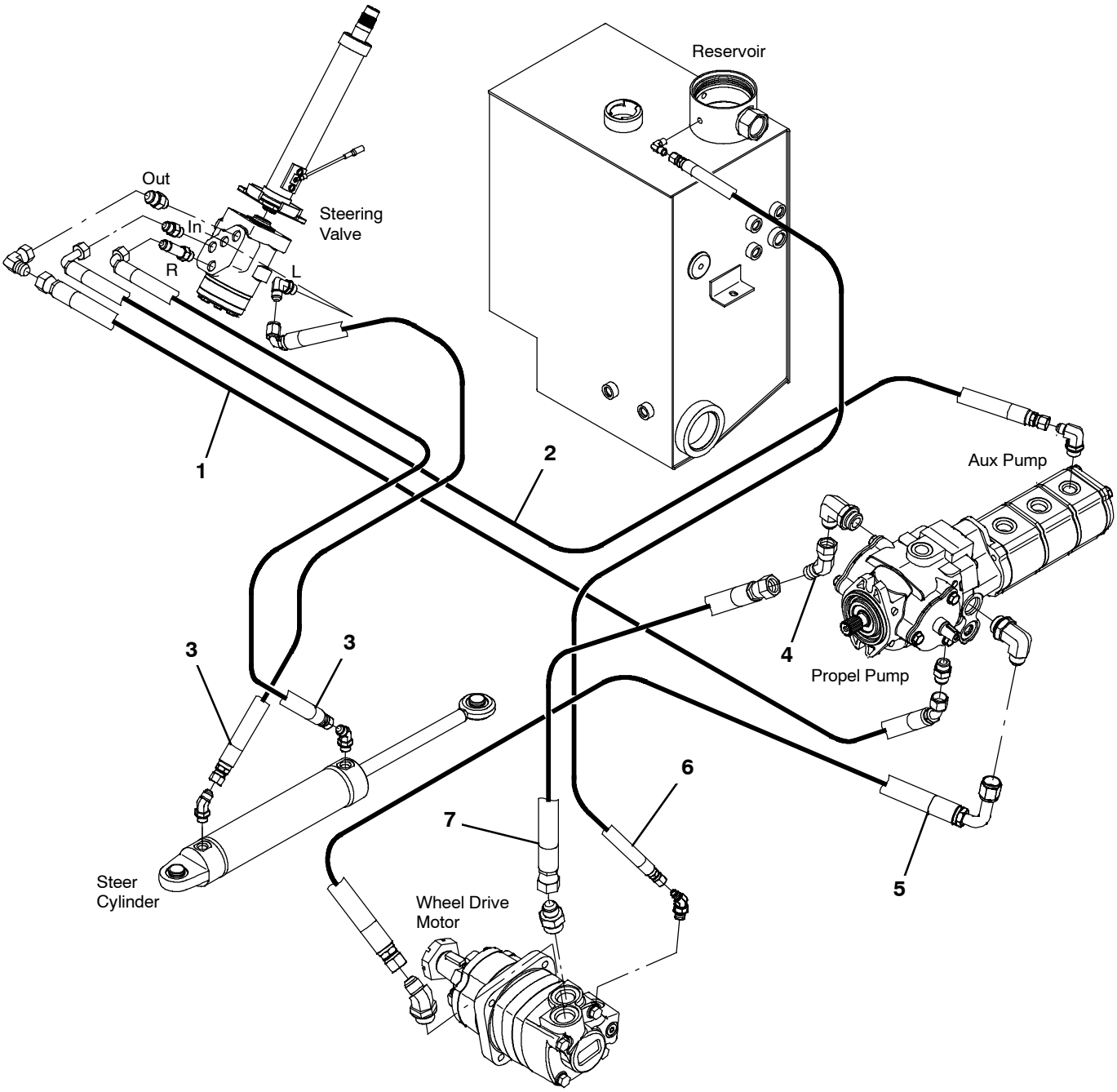

354645

Fig. 68 - Hydraulic Hose Group, Steering and Propel

Ref.	Part No.	Serial Number	Description	Qty.
1	1023609	(000000-)	Hose, Hyd, Tc08, Jf08e45/Jf08str, 096.0	1
2	1023608	(000000-)	Hose, Hyd, Tc06, Jf06e90/Jf06str, 104.0	1
3	396221	(000000-)	Hose, Hyd, Tc06, Jf06e90/Jf06str, 040.0	2
4	54017	(000000-)	Fitting, Hyd, E45, Jf10/Jm10	1
5	1023488	(000000-)	Hose, Hyd, Spcl, Jf10e90/Jf10str, 063.0	1
6	1030404	(000000-)	Hose, Hyd,Med04, Jf04str/Jf04str, 066.0	1
7	1038569	(000000-)	Hose, Hyd, Spcl, Jf10str/Jf10str, 56.5	1

Fig. 69 - Hydraulic Hose Group, Pump and Vacuum Fan (000000-004454)

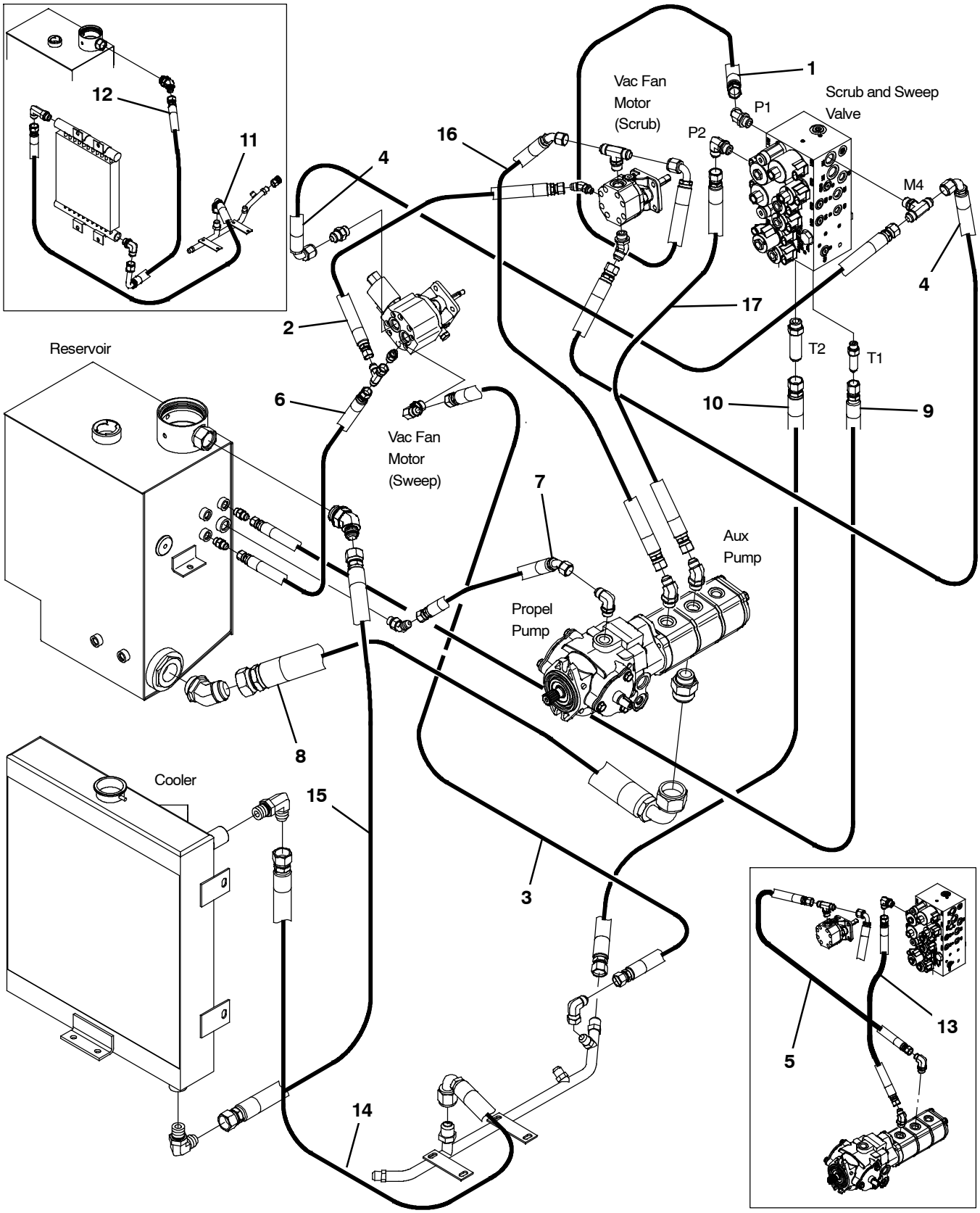

354646 - M30, G/LP

Fig. 69 - Hydraulic Hose Group, Pump and Vacuum Fan (000000-004454)

Ref.	Part No.	Serial Number	Description	Qty.
1	71741	(000000-004454)	Hose, Hyd, Tc08, Jf08e90/Jf08str, 046.0	1
2	16431	(000000-004454)	Hose, Hyd, Med06, Jf06str/Jf06str, 022.0	1
3	1036945	(000000-004454)	Hose, Hyd, Tc08, Jf08str/Jf08str, 031.0	1
4	1040216	(000000-004454)	Hose, Hyd, Tc08, Jf08e90/Jf08str, 029.0	2
5	1026645	(000000-001462)	Hose, Hyd, Tc08, Jf08e45/Jf08str, 026.0	1
6	16431	(000000-004454)	Hose, Hyd, Med06, Jf06str/Jf06str, 022.0	1
7	34395	(000000-004454)	Hose, Hyd, Med08, Jf08str/Jf08str, 025.0	1
8	34351	(000000-004454)	Hose, Hyd, Suc20, Jf20str/Jf20e90, 032.0	1
9	71556	(000000-004454)	Hose, Hyd, Med06, Jf06str/Jf06str, 042.0	1
10	1025547	(000000-004454)	Hose, Hyd, Med10, Jf10Str/Jf10Str, 041.0	1
11	1040664	(000000-001249)	Hose, Hyd, Med12, Jf12e90/Jf12str, 048.0	1
12	1036817	(000000-001249)	Hose, Hyd, Med12, Jf12e90/Jf12str, 056.0	1
13	1023606	(000000-001462)	Hose, Hyd, Tc08, Jf08str/Jf08str, 021.0	1
14	1050436	(001250-004454)	Hose, Hyd, Med12, Jf12E90/Jf12Str, 029.0	1
15	1028145	(001250-004454)	Hose, Hyd, Med12, Jf12Str/Jf12Str, 066.0	1
16	1026645	(001463-004454)	Hose, Hyd, Tc08, Jf08E45/Jf08Str, 026.0	1
17	1023606	(001463-004454)	Hose, Hyd, Tc08, Jf08Str/Jf08Str, 021.0	1

Fig. 70 - Hydraulic Hose Group, Pump and Vacuum Fan (004455-)

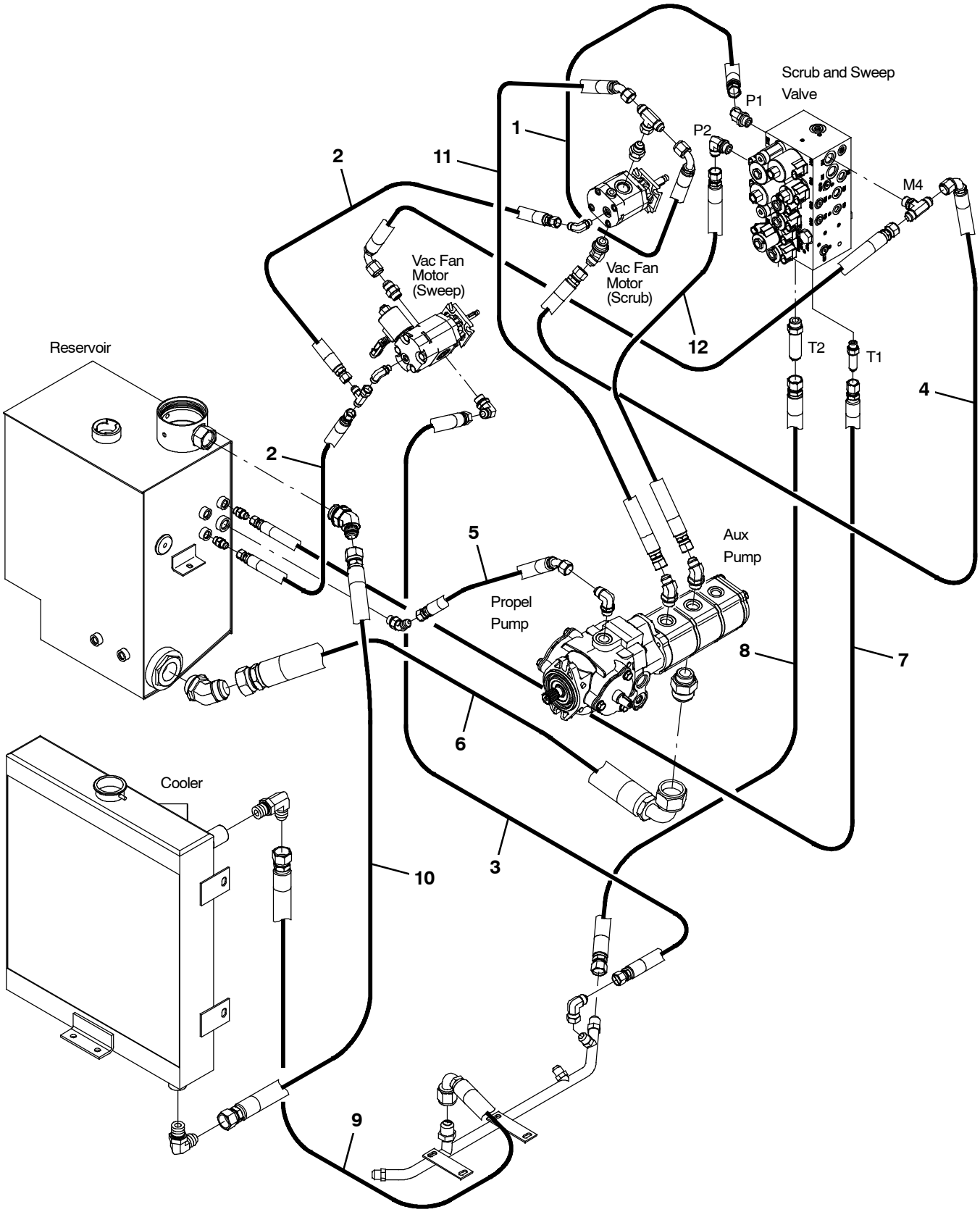

356560 - M30

Fig. 70 - Hydraulic Hose Group, Pump and Vacuum Fan (004455-)

Ref.	Part No.	Serial Number	Description	Qty.
1	71741	(004455-)	Hose, Hyd, Tc08, Jf08e90/Jf08str, 046.0	1
2	16431	(004455-)	Hose, Hyd, Med06, Jf06str/Jf06str, 022.0	2
3	1036945	(004455-)	Hose, Hyd, Tc08, Jf08str/Jf08str, 031.0	1
4	1040216	(004455-)	Hose, Hyd, Tc08, Jf08e90/Jf08str, 029.0	2
5	34395	(004455-)	Hose, Hyd, Med08, Jf08str/Jf08str, 025.0	1
6	34351	(004455-)	Hose, Hyd, Suc20, Jf20str/Jf20e90, 032.0	1
7	71556	(004455-)	Hose, Hyd, Med06, Jf06str/Jf06str, 042.0	1
8	1025547	(004455-)	Hose, Hyd, Med10, Jf10Str/Jf10Str, 041.0	1
9	1050436	(004455-)	Hose, Hyd, Med12, Jf12E90/Jf12Str, 029.0	1
10	1028145	(004455-)	Hose, Hyd, Med12, Jf12Str/Jf12Str, 066.0	1
11	1026645	(004455-)	Hose, Hyd, Tc08, Jf08E45/Jf08Str, 026.0	1
12	1023606	(004455-)	Hose, Hyd, Tc08, Jf08Str/Jf08Str, 021.0	1

Fig. 71 - Hydraulic Hose Group, Brush and Hopper

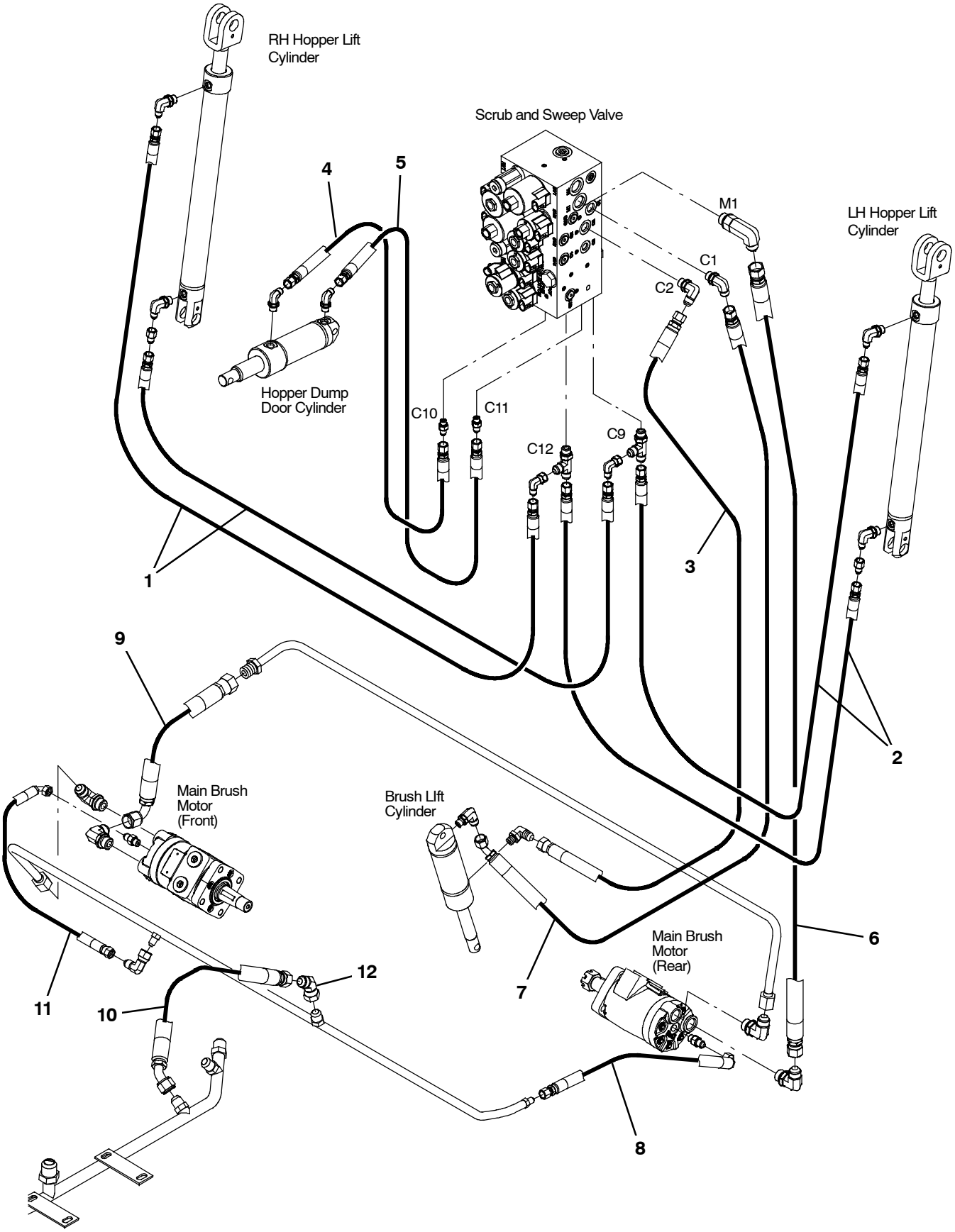

354647

Fig. 71 - Hydraulic Hose Group, Brush and Hopper

Ref.	Part No.	Serial Number	Description	Qty.
1	1040628	(000000-)	Hose, Hyd, Tc04, Jf04str/Jf04str, 96.0	2
2	1040629	(000000-)	Hose, Hyd, Tc04, Jf04str/Jf04str, 58.0	2
3	1036939	(000000-)	Hose, Hyd, Tc06, Jf06str/Jf06str, 054.0	1
4	1040764	(000000-)	Hose, Hyd, Spcl, Jf04str/Jf04str, 144.0	1
5	1040763	(000000-)	Hose, Hyd, Spcl, Jf04str/Jf04str, 140.0	1
6	1024764	(000000-)	Hose, Hyd, Tc08, Jf08str/Jf08str, 048.0	1
7	1023769	(000000-)	Hose, Hyd, Tc06, Jf06str/Jf06e45, 056.0	1
8	57946	(000000-)	Hose, Hyd, Med04, Jf04e90/Jf04str, 016.0	1
9	1025544	(000000-)	Hose, Hyd, Tc08, Jf08e90/Jf08str, 013.0	1
10	364978	(000000- 004420)	Hose, Hyd, Med08, Jf08e45/Jf08str, 029.0	1
10	1041391	(004421-)	Hose, Hyd, Tc08, Jf08e45/Jf08str, 018.0	1
11	387281	(001221-)	Hose, Hyd, Tc04, Jf04e90/Jf04str, 020.0	1
12	07797	(004421-)	Fitting, Hyd, E45, Jf08/Jm08	1

Fig. 72 - Hydraulic Hose Group, Squeegee Lift

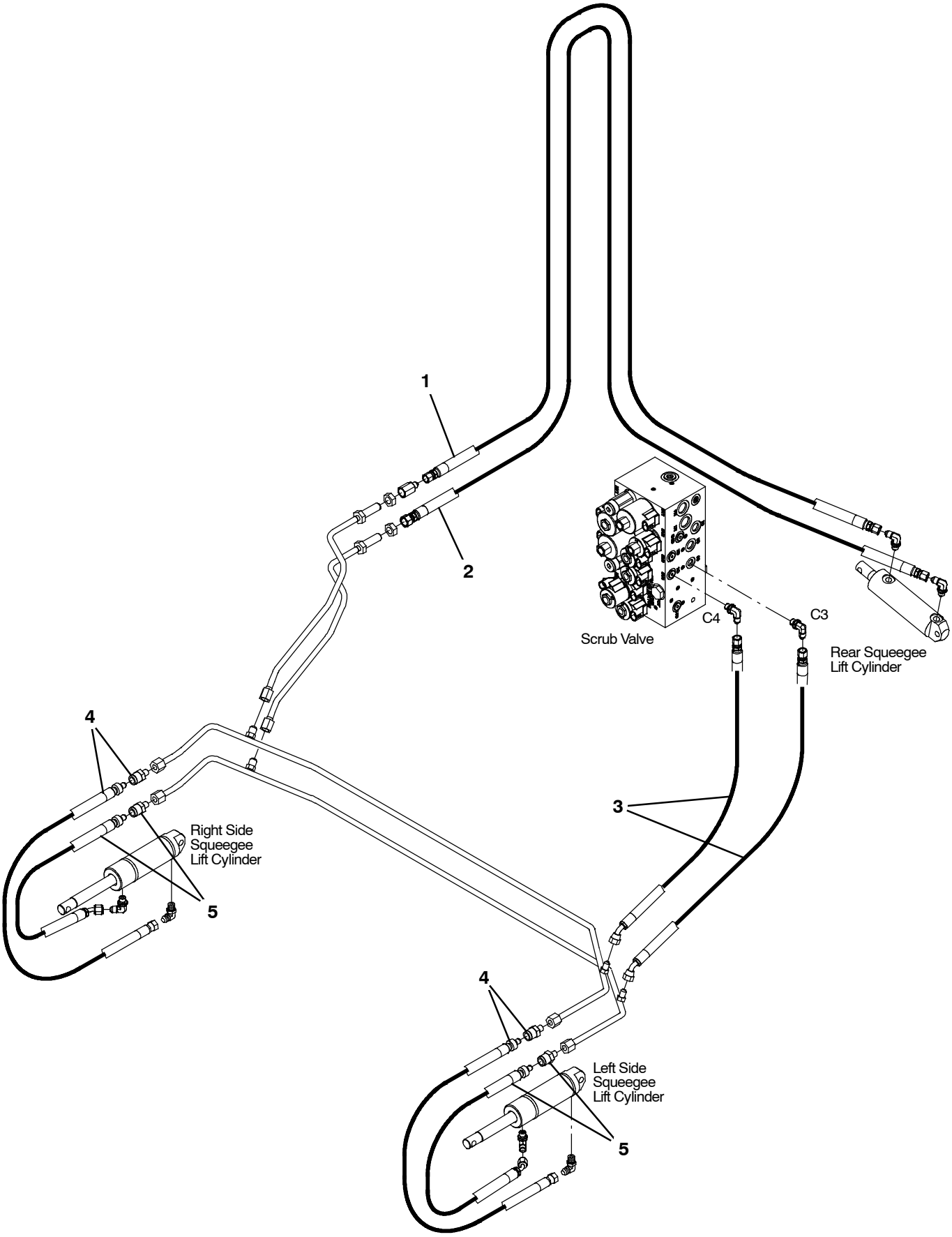

354648

Fig. 72 - Hydraulic Hose Group, Squeegee Lift

Ref.	Part No.	Serial Number	Description	Qty.
1	1036956	(000000-)	Hose, Hyd, Spcl, Jf04str/Jf04str, 133.0	1
2	1036955	(000000-)	Hose, Hyd, Spcl, Jf04str/Jf06str, 136.0	1
3	1030709	(000000-)	Hose, Hyd, Tc04, Jf04str/Jf04e45, 035.0	2
4	1045759	(000000-)	Hose, Hyd, Tc04, Jf04Str/Qm06, 028.0	2
5	1036899	(000000-)	Hose, Hyd, Tc04, Jf04e45/Qm06, 024.0	2

Fig. 73 - Hydraulic Pumps Group

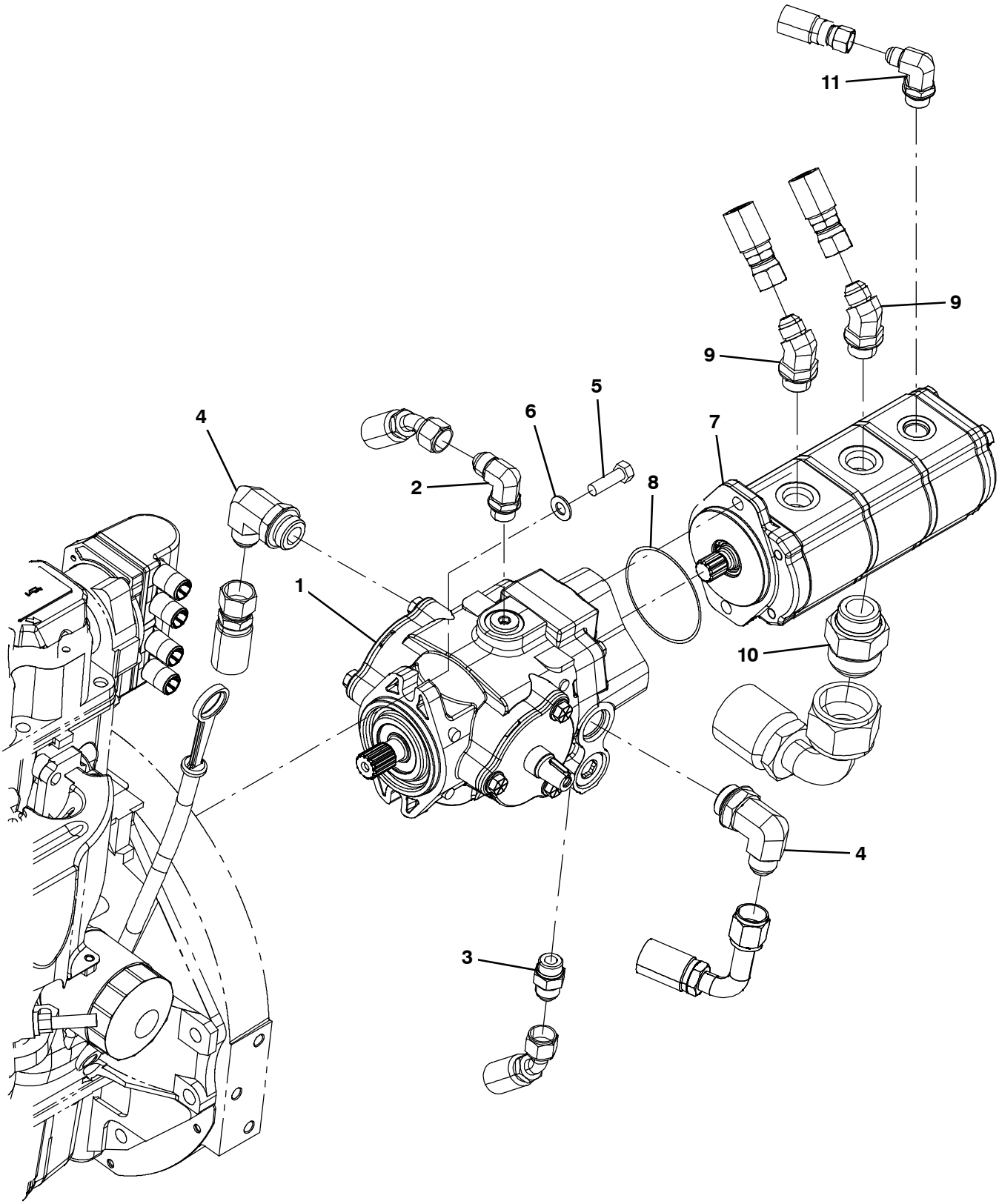

354454

Fig. 73 - Hydraulic Pumps Group

Ref.	Part No.	Serial Number	Description	Qty.
1	1024251	(000000-)	Pump, Hyd, Piston, Var, 1.24 4000, Cw (See Breakdowns)	1
2	44868	(000000-)	Fitting, Hyd, E90, Jm08/Om08	1
3	44869	(000000-)	Fitting, Hyd, Str, Jm08/Om08	1
4	53076	(000000-)	Fitting, Hyd, E90, Jm10/Om12	2
5	21198	(000000-)	Screw, Hex, .38- 16 X 1.25, G5	2
6	32485	(000000-)	Washer, Flat, 0.38, Sae	2
7	1034448	(000000- 001462)	Pump, Hyd, Gear, Ext, 3, 00.85 2500, CW (See Breakdowns) (Replaced by 9007143)	1
7	9007143	(001463- 003999)	Pump kit, Mtg, Aux, Ci [M20 & T20]	1
7	9007142	(004000-)	Pump kit, Mtg, Aux, Ci [M20 & T20]	1
8	65145- 1	(000000-)	Seal, Org, .069 X 03.06id	1
9	47513	(000000-)	Fitting, Hyd, E45, Jm08/Om10	1
10	67811	(000000-)	Fitting, Hyd, Str, Jm20/Om16	1
11	47512	(000000-)	Fitting, Hyd, E90, Jm06/Om08	1

Fig. 74 - Hydraulic Cooler and Tubes Group

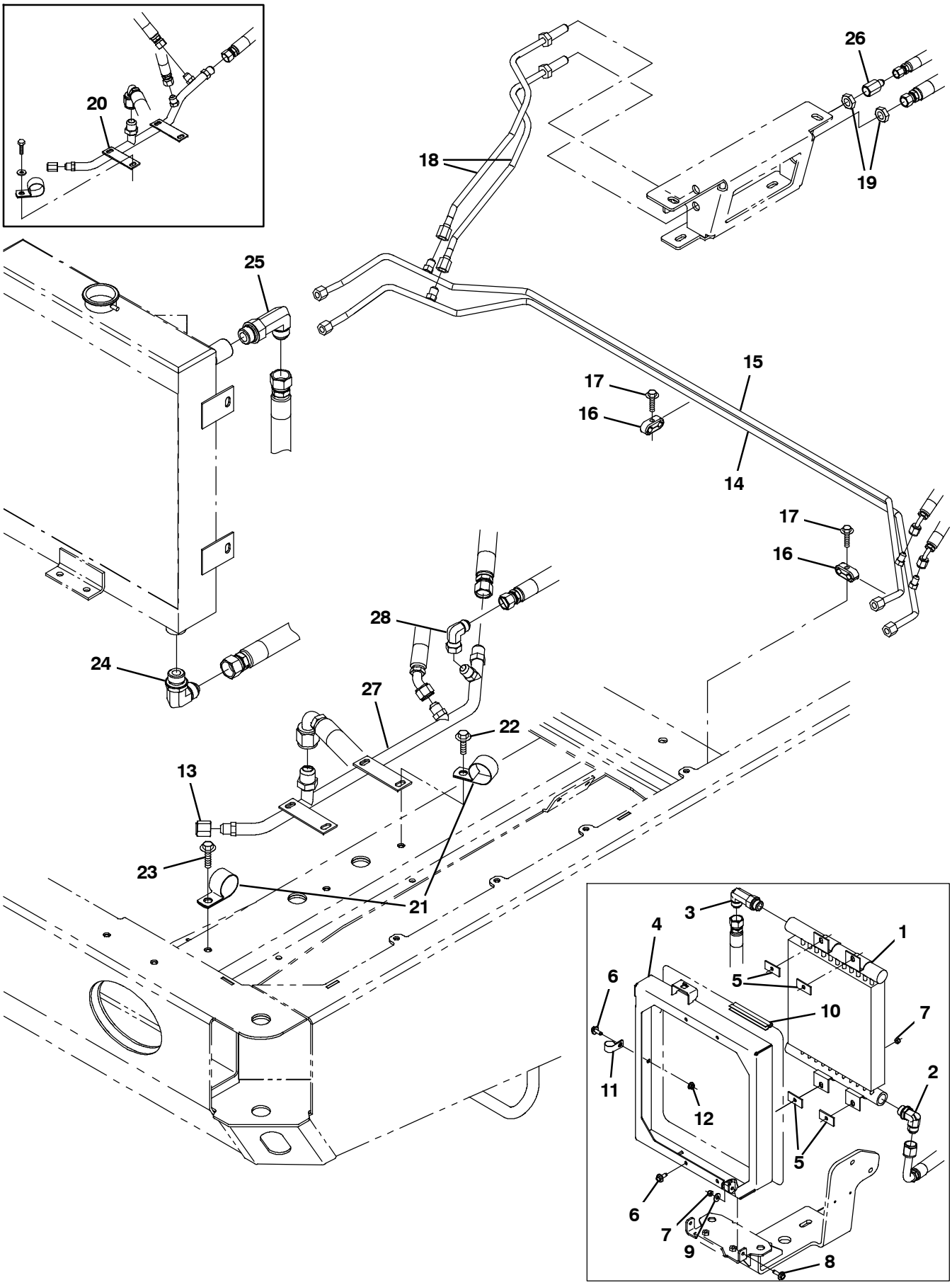

354644

Fig. 74 - Hydraulic Cooler and Tubes Group

Ref.	Part No.	Serial Number	Description	Qty.
1	13698	(000000- 001249)	Cooler, Hyd, 25gpm 325btu Of12 13x12x2	1
2	46481	(000000- 001249)	Fitting, Hyd, E90, Jm12/Om12	1
3	62471	(000000- 001249)	Fitting, Hyd, E90, Jm12/Om12, Long	1
4	1033290	(000000- 001249)	Bracket Wldt, Cooler, Hyd Fluid	1
5	1040318	(000000- 001249)	Pad, Tank, Hyd [W/Psa]	4
6	1037346	(000000- 001249)	Screw, Hex, M8 X 1.25 X 25, 9.8, Sems	5
7	08709	(000000- 001249)	Nut, Hex, Lock, M8 X 1.25, Nl	6
8	1037354	(000000- 001249)	Screw, Hex, M8 X 1.25 X 30, 9.8, Sems	2
9	32491	(000000- 001249)	Washer, Flat, 0.31, Std	2
10	1031632	(000000- 001249)	Seal, Afmkt, Bulb, Str, .50D F/11Ga 08Ft	1
11	69234	(000000- 001249)	Clamp, Cable, Stl, 1.00d X 0.75w, 1hole	1
12	07791	(000000- 001249)	Nut, Hex, Flng, M8 X 1.25	1
13	60090	(000000-)	Fitting, Hyd, Cap, Jf08	1
14	1042126	(000000-)	Tube, Hyd, 06, Sqge Lift	1
15	1042096	(000000-)	Tube, Hyd, 06, Sqge Lift	1
16	1043166	(000000-)	Clamp, Tube, 0.37d 0.37d, 2 Hole	2
17	222159	(000000-)	Screw, Hex, M6 X 1.00 X 25, Fmg	2
18	1028823	(000000-)	Tube, Hyd, Rear Sqge [M20]	2
19	35904	(000000-)	Nut, Ftg, Hyd, 0.56- 18	2
20	1036959	(000000- 003999)	Tube, Hyd, Main Return	1
21	53466	(000000-)	Clamp, Cable, Stl, 1.50d X 1.00w, 1hole	2
22	1037346	(000000-)	Screw, Hex, M8 X 1.25 X 25, 9.8, Sems	1
23	1037354	(000000-)	Screw, Hex, M8 X 1.25 X 30, 9.8, Sems	1
24	46481	(001250-)	Fitting, Hyd, E90, Jm12/Om12	1
25	62471	(001250-)	Fitting, Hyd, E90, Jm12/Om12, Long	1
26	47752	(000000-)	Fitting, Hyd, Str, Jf06/Jm04	1
27	1071173	(004000-)	Tube, Hyd, Main Return [G/Lp Mit2013]	1
28	17980	(004000-)	Fitting, Hyd, E90, Jf08/Jm08	1

Fig. 75 - Hydraulic Reservoir Group

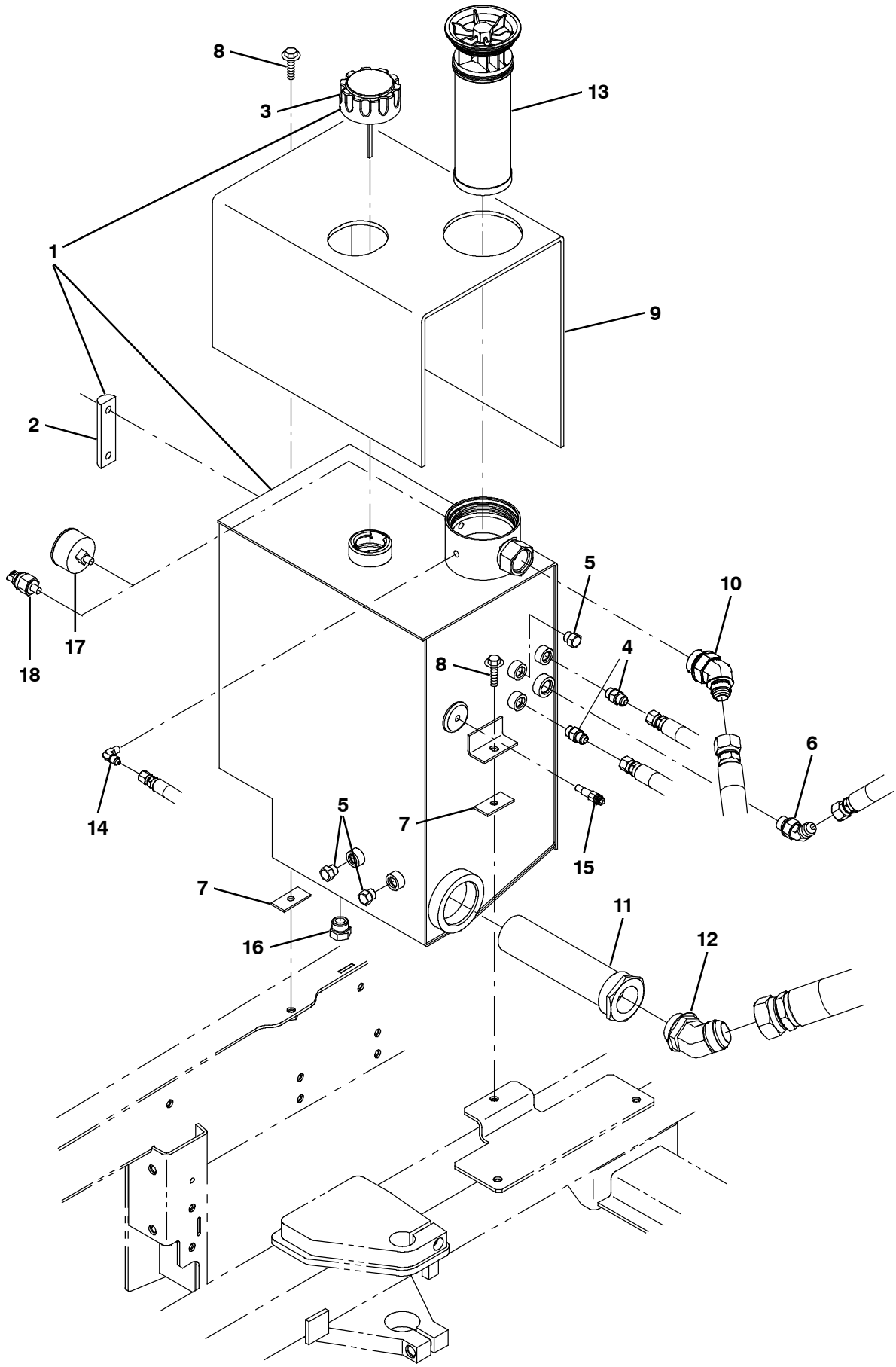

354641

Fig. 75 - Hydraulic Reservoir Group

	Ref.	Part No.	Serial Number	Description	Qty.
▽	1	9002398	(000000-)	Reservoir, Hyd, 10.0gal, Replmt	1
▲	2	65215	(000000-)	Gauge, Sensing, Level	1
▲	3	25122	(000000-)	Cap, Breather, Hyd, 2.4 Ds	1
	3	1018289	(000000-)	Cap, Breather, Hyd w/Chain (CE Only)	1
	4	56690	(000000-)	Fitting, Hyd, Str, Jm06/Om06	2
	5	46482	(000000-)	Fitting, Hyd, Plug, Om06	3
	6	42226	(000000-)	Fitting, Hyd, E45, Jm08/Om08	1
	7	1040318	(000000-)	Pad, Tank, Hyd [W/Psa]	2
	8	1037354	(000000-)	Screw, Hex, M8 X 1.25 X 30, 9.8, Sems	2
	9	1034878	(000000-)	Insulation, Thermal, Hyd Blanket	1
	10	1023545	(000000-)	Fitting, Hyd, E45, Jm12/Om16	1
	11	31613	(000000-)	Strainer, Hyd, 025gpm 100mesh 03psi	1
	12	71726	(000000-)	Fitting, Hyd, E45, Jm20/Om20	1
	13	1021579	(000000-)	Filter Assy, Hyd, 10mic	1
	14	55455	(000000-)	Fitting, Hyd, E90, Jm04/Pm02	1
	15	58592	(000000-)	Send- Unit, Water, Temp,04npt[113oh/195d]	1
	16	40362	(000000-)	Fitting, Hyd, Plug, Om10	1
	17	1025132	(000000-)	Indicator, Press, 60psi (NA Only)	1
	18	1025133	(000000-)	Switch, Press, Hyd, 18- 24Psi, Spst, No (CE Only)	1

Fig. 76 - Hydraulic Valve Group

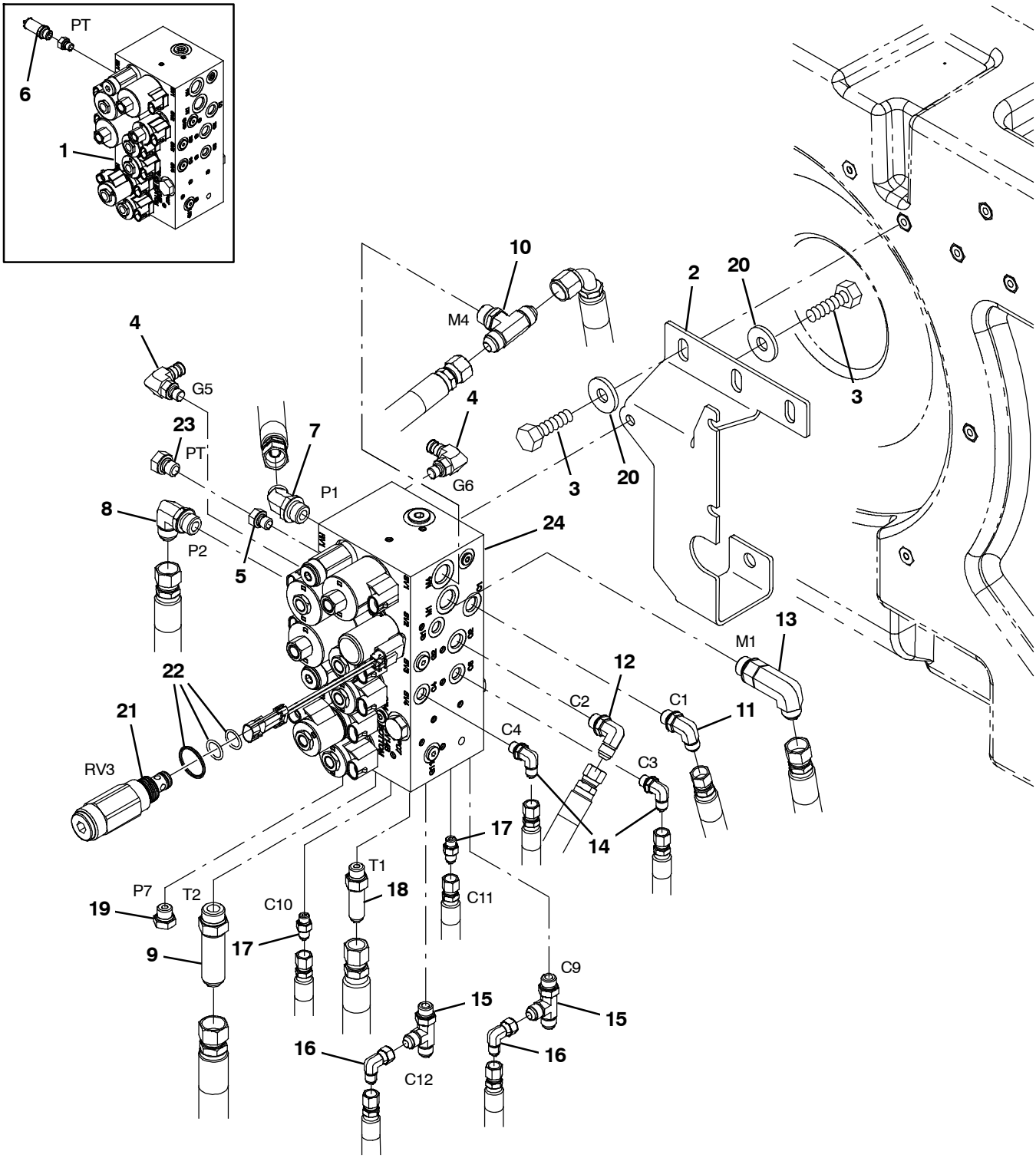

354642

Fig. 76 - Hydraulic Valve Group

	Ref.	Part No.	Serial Number	Description	Qty.
	1	1038566	(000000- 004113)	Valve, Hyd, Solenoid, 12vdc (See Breakdowns)	1
	2	1040339	(000000-)	Bracket, Mtg, Valve, Hyd	1
	3	09740	(000000-)	Screw, Hex, M8 X 1.25 X 20, Ss	7
	4	395974	(000000-)	Fitting, Hyd, E90, Om04/Qm04	2
	5	9000990	(000000-)	Fitting, Hyd, Str, Om04/Pf04	1
	6	1037336	(000000- 001395)	Sensor, Hyd, 3000 Psi (Replaced by 9007155)	1
	7	42226	(000000-)	Fitting, Hyd, E45, Jm08/Om08	1
	8	69173	(000000-)	Fitting, Hyd, E90, Jm08/Om08, Long	1
	9	1040876	(000000-)	Fitting, Hyd, Str, Jm10/Om10, Long	1
	10	49933	(000000-)	Fitting, Hyd, Tee, Jm08/Jm08/Om08, Br	1
	11	56820	(000000-)	Fitting, Hyd, E90, Jm06/Om06	1
	12	71727	(000000-)	Fitting, Hyd, E90, Jm06/Om06, Long	1
	13	69173	(000000-)	Fitting, Hyd, E90, Jm08/Om08, Long	1
	14	77097	(000000-)	Fitting, Hyd, E90, Jm04/Om04	2
	15	34390	(000000-)	Fitting, Hyd, Tee, Jm04/Jm04/Om04, Run	2
	16	39210	(000000-)	Fitting, Hyd, E90, Jf04/Jm04	2
	17	55586	(000000-)	Fitting, Hyd, Str, Jm04/Om04	2
	18	59577	(000000-)	Fitting, Hyd, Str, Jm06/Om06, Long	1
	19	46482	(000000-)	Fitting, Hyd, Plug, Om06	1
	20	1017218	(000000-)	Washer, Flat, 0.32B 1.00D .12, Ss	1
▽	21	1043459	(000000-)	Valve, Relief, 1100 Psi	1
▲	22	373647	(000000-)	Seal Kit, Cartridge	1
	23	33812	(001396-)	Fitting, Hyd, Plug, Om04	1
	24	1072995	(004114-)	Valve, Cntrl, Hyd, Solenoid, 12vdc 10gpm (See Breakdowns)	1

Fig. 77 - GM Electrical Schematic (000000-001544)

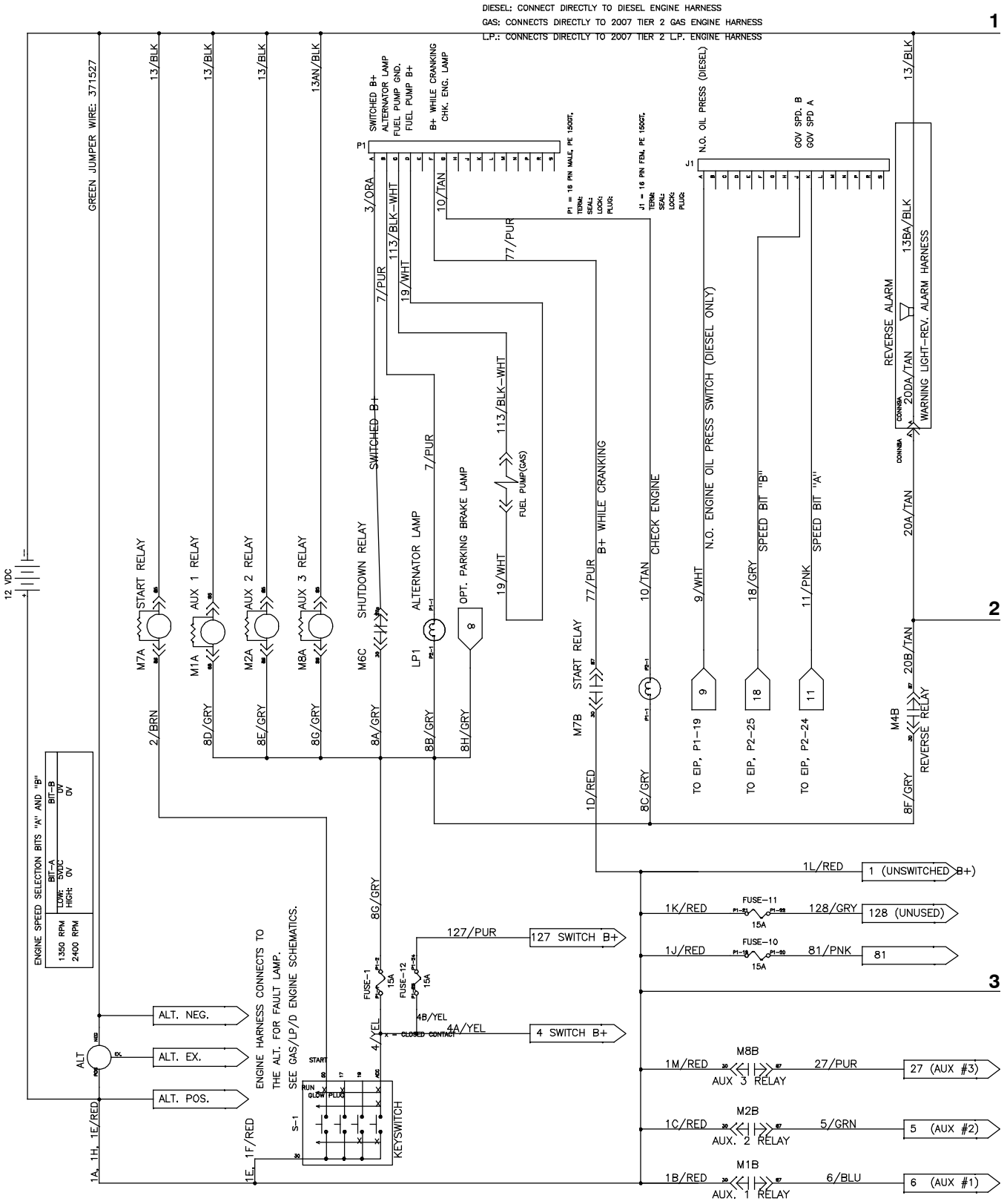

1033626 - 354727

Fig. 77 - GM Electrical Schematic (000000-001544)

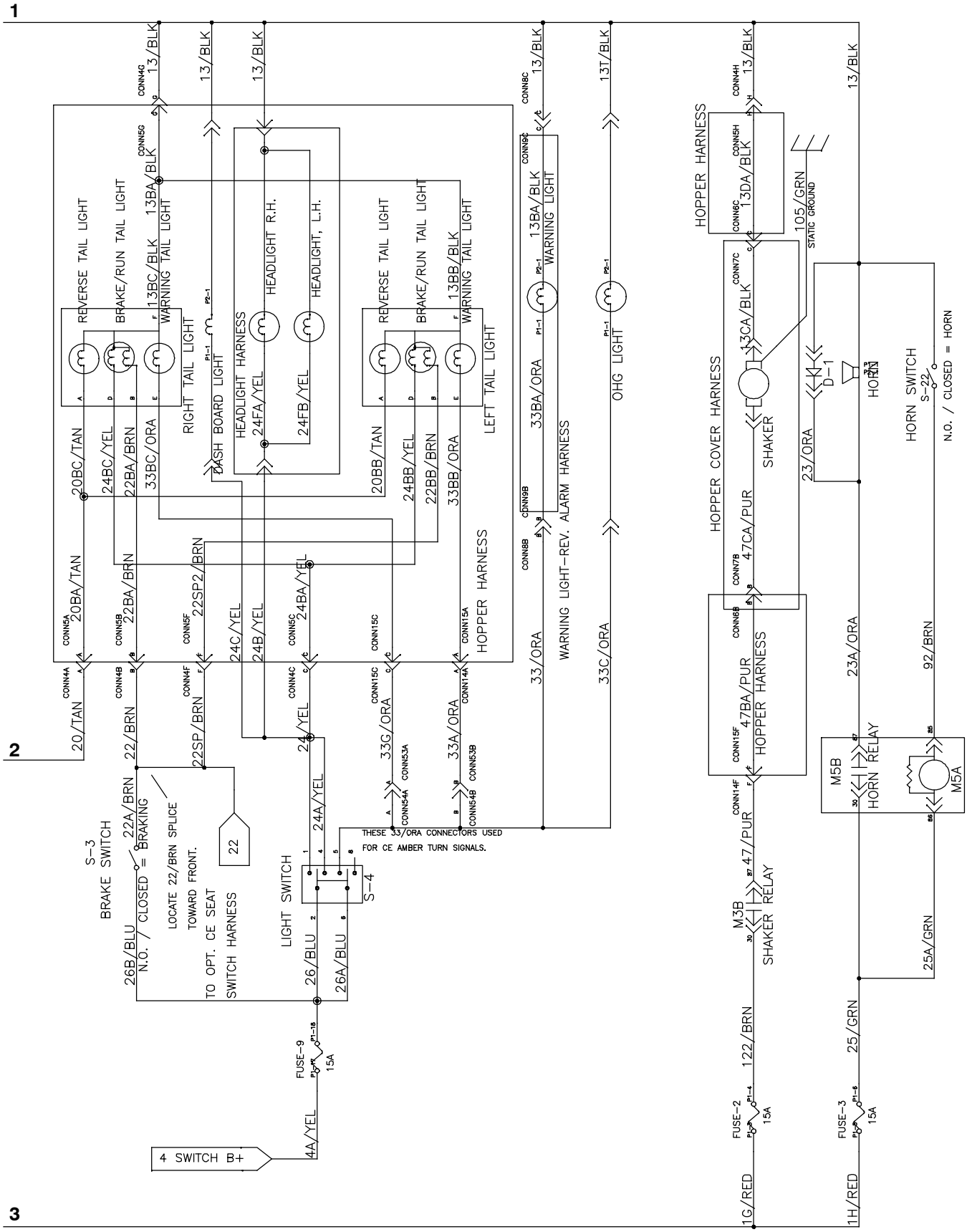

1033626 - 354727

Fig. 77 - GM Electrical Schematic (000000-001544)

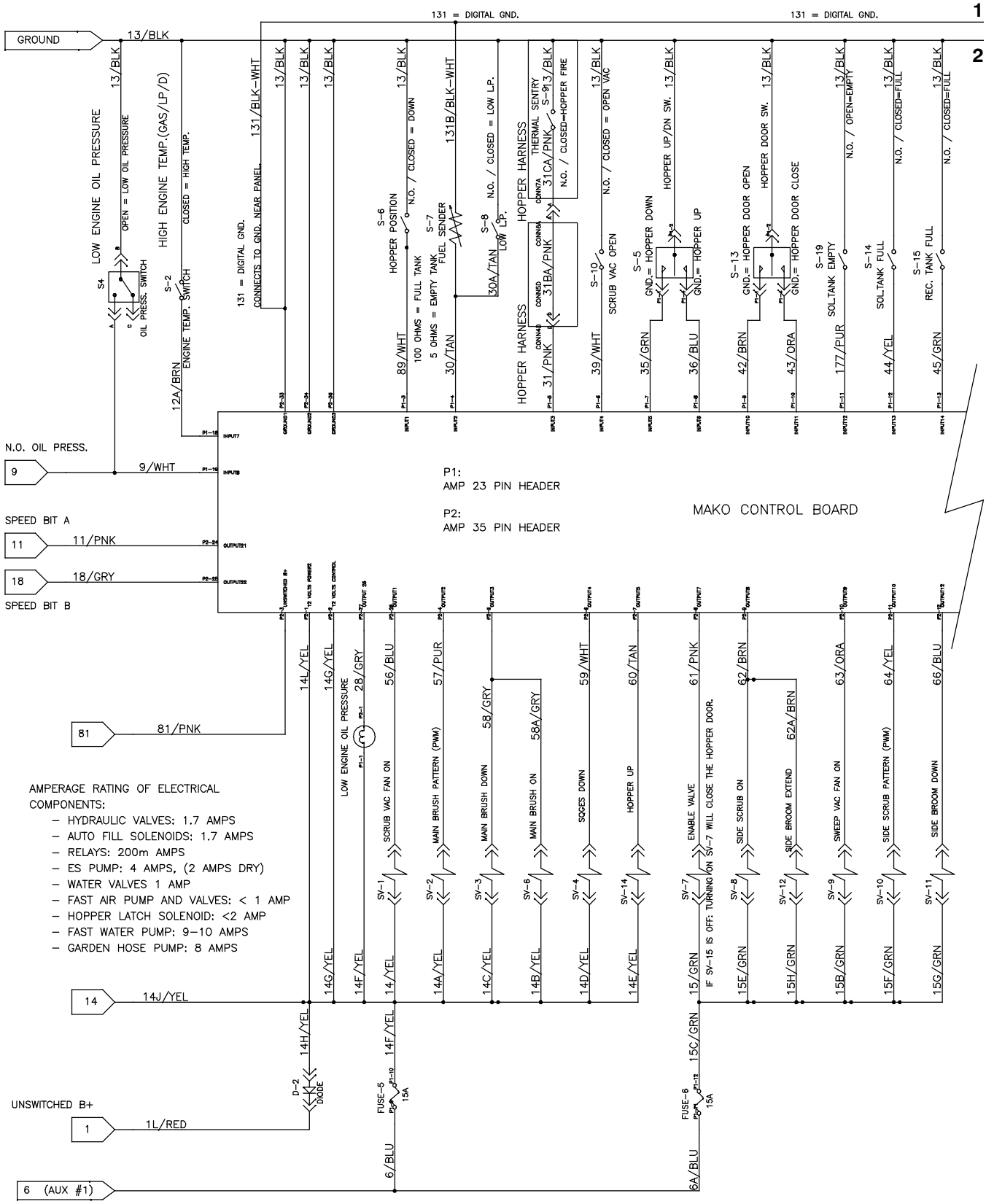

1033626 - 354727

Fig. 77 - GM Electrical Schematic (000000-001544)

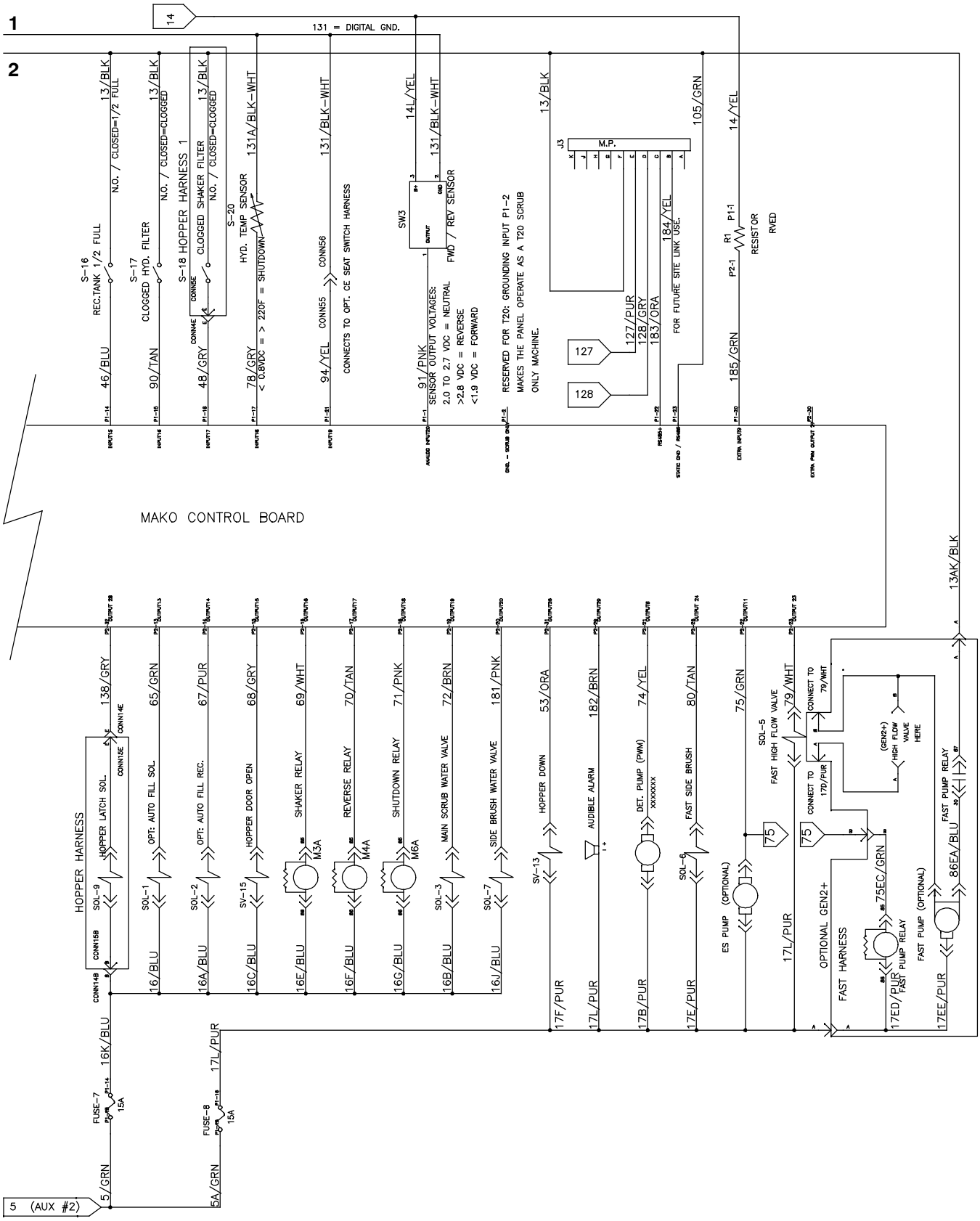

1033626 - 354727

Fig. 77 - GM Electrical Schematic (000000-001544)

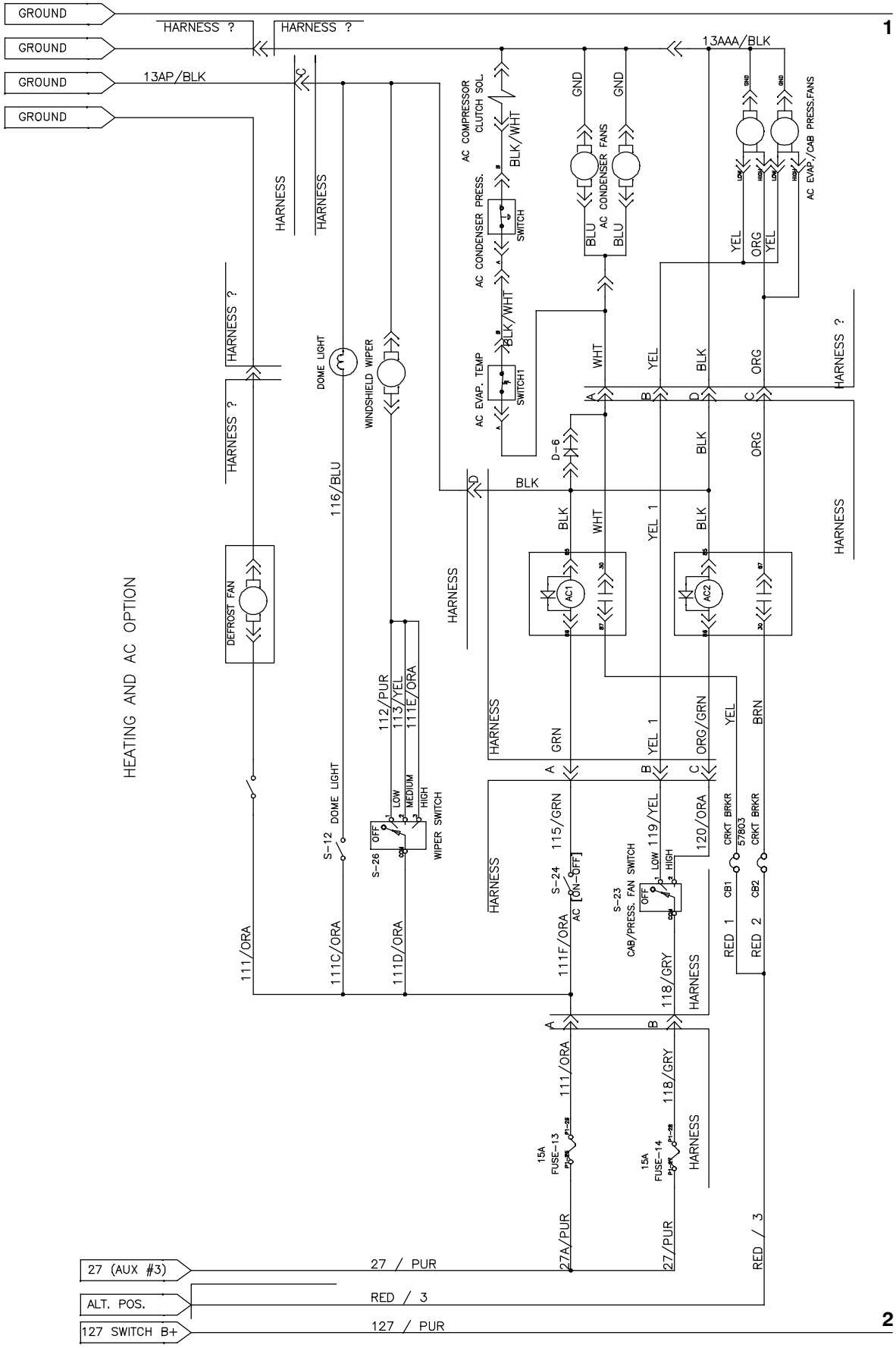

1033626 - 354727

Fig. 77 - GM Electrical Schematic (000000-001544)

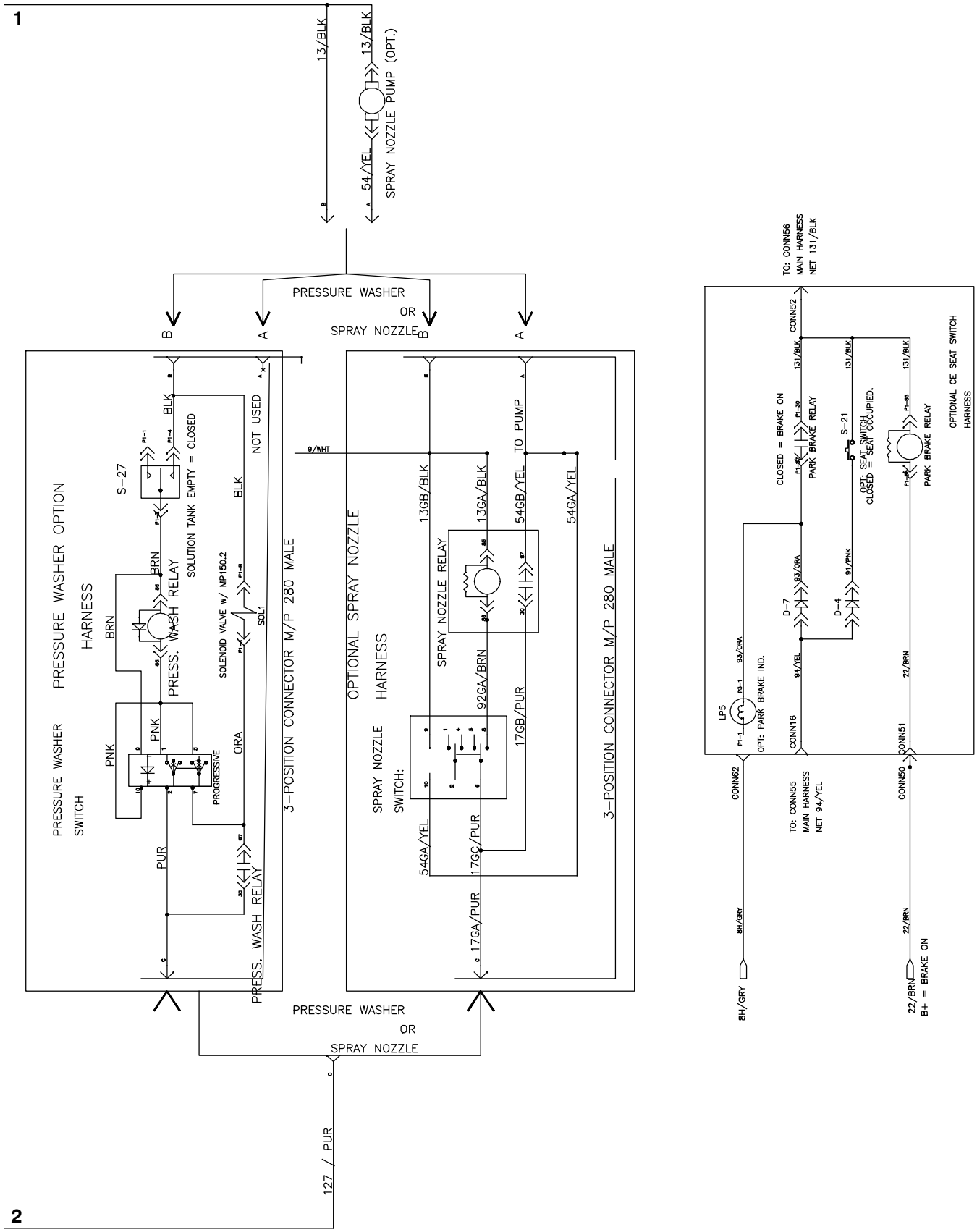

1033626 - 354727

Fig. 77 - GM Electrical Schematic (000000-001544)

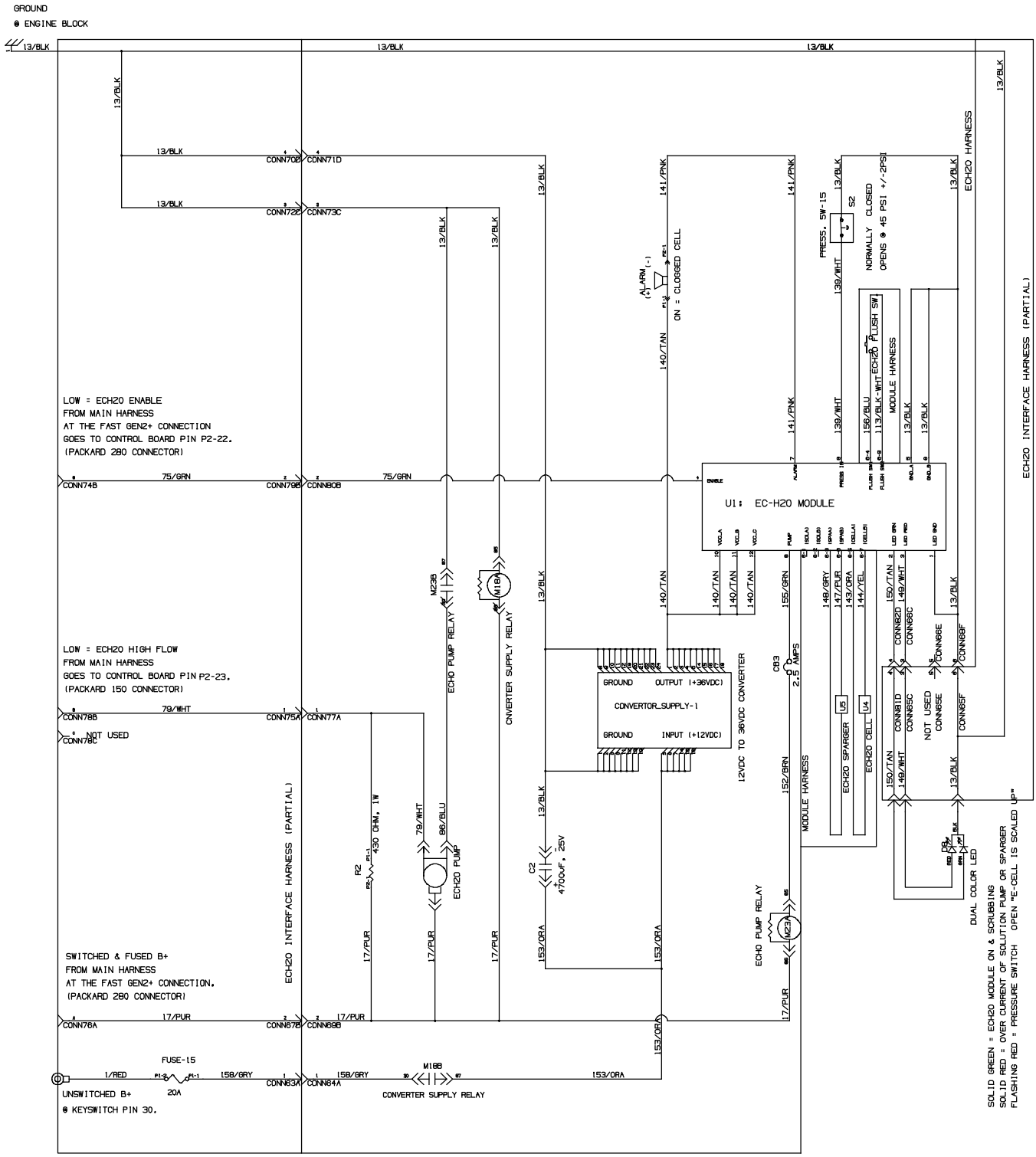

1033626 - 354727

Fig. 78 - GM Electrical Schematic (001545-003999)

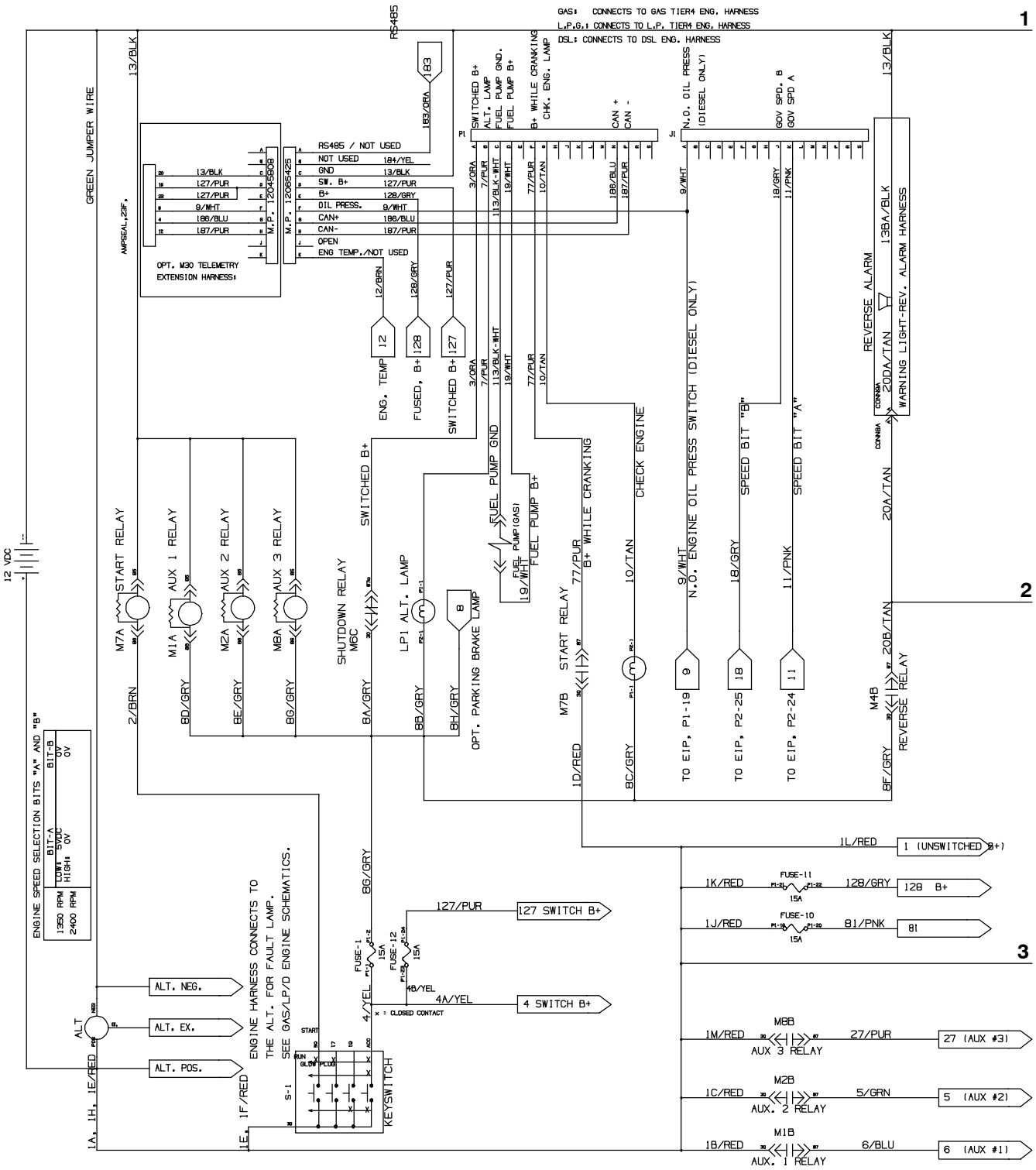

1033626 - 354727

Fig. 78 - GM Electrical Schematic (001545-003999)

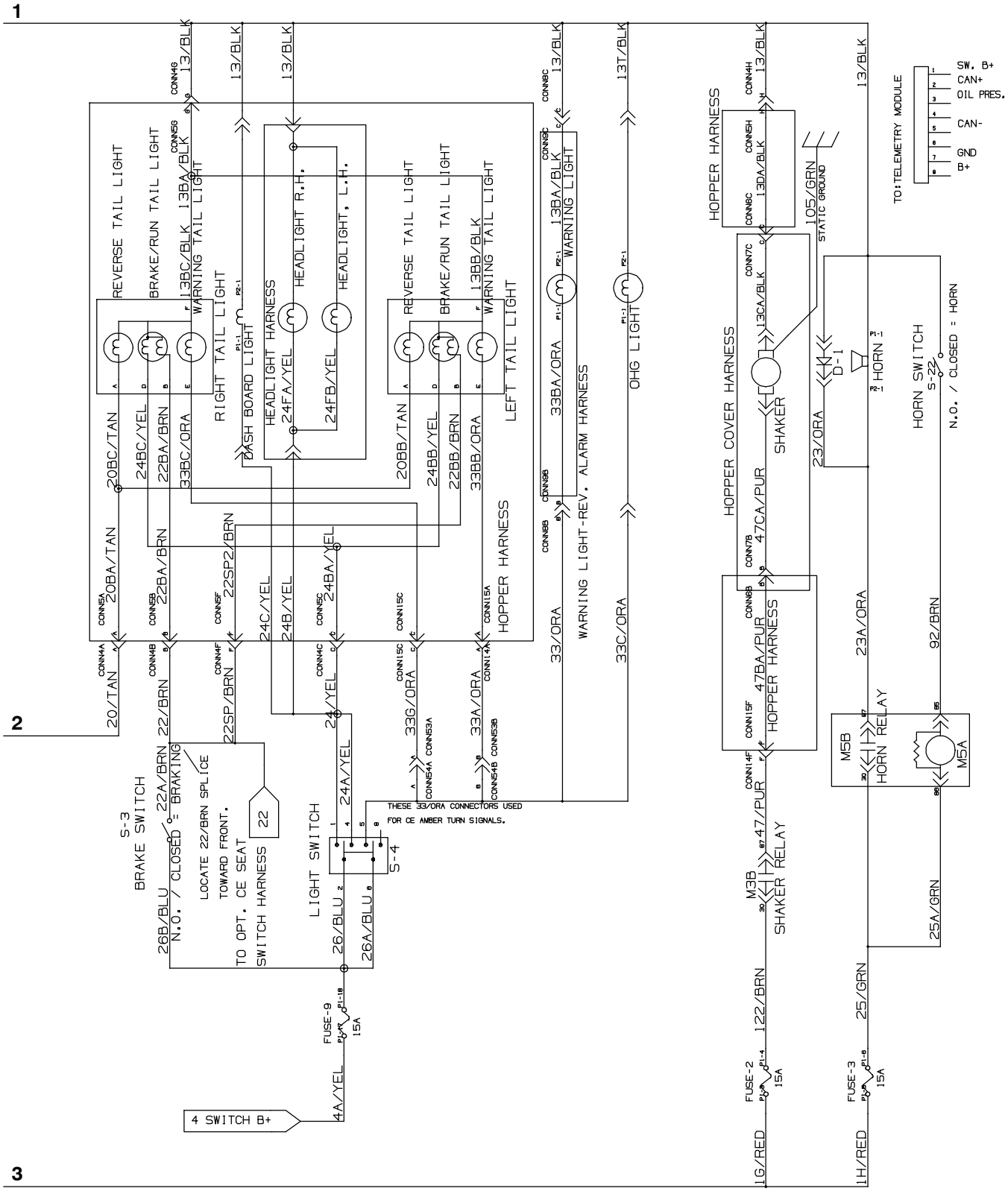

1033626 - 354727

Fig. 78 - GM Electrical Schematic (001545-003999)

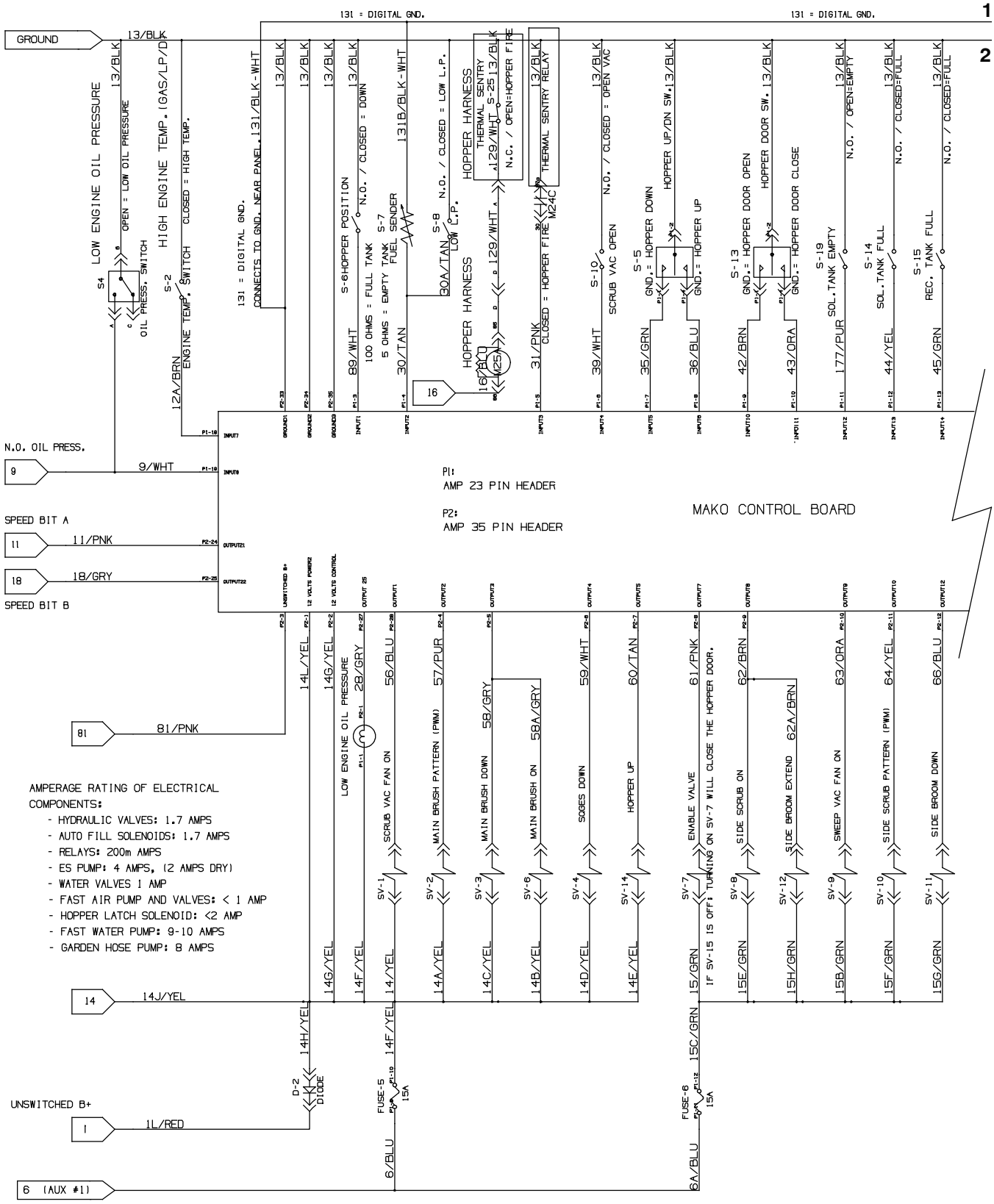

1033626 - 354727

Fig. 78 - GM Electrical Schematic (001545-003999)

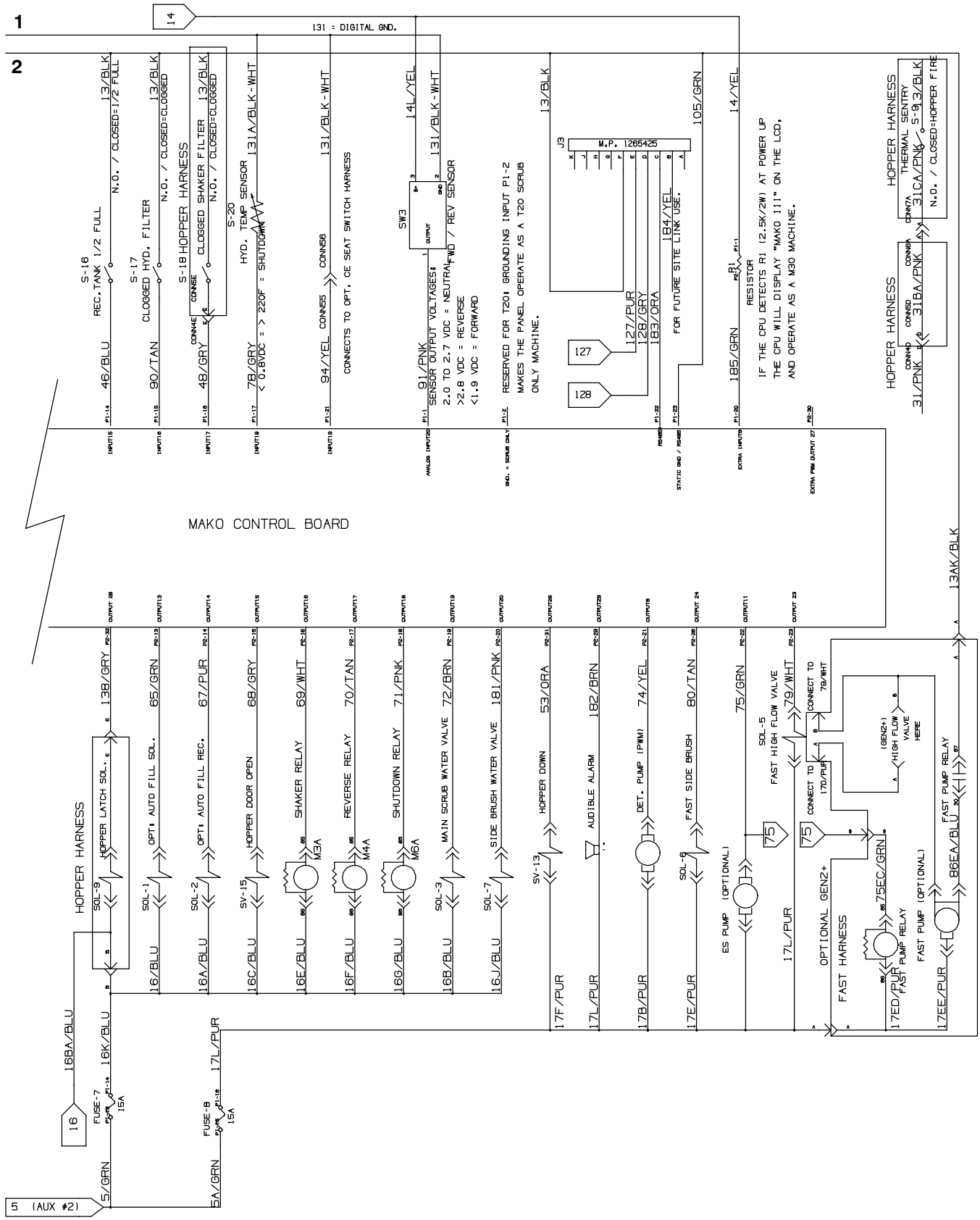

1033626 - 354727

Fig. 78 - GM Electrical Schematic (001545-003999)

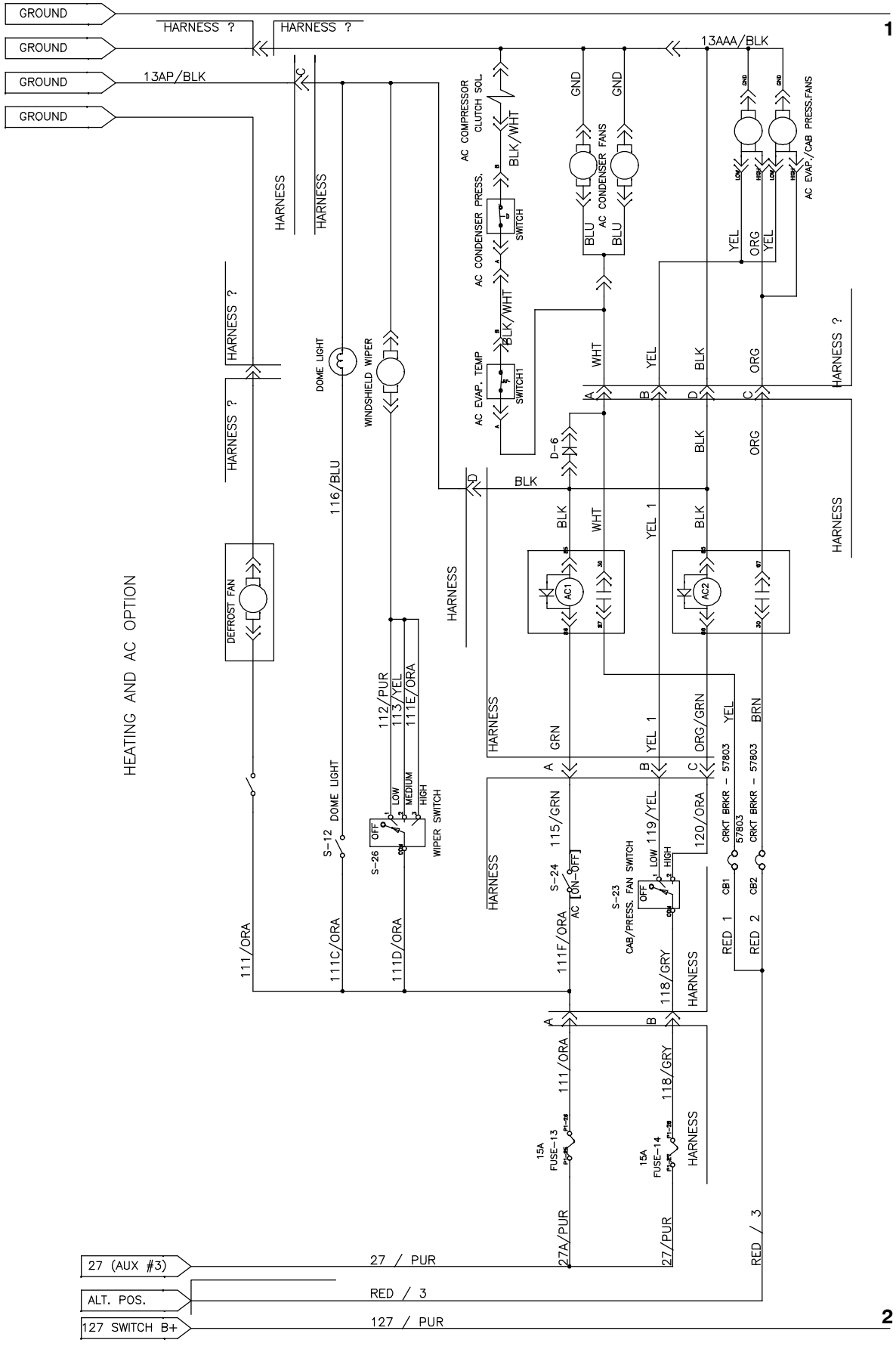

1033626 - 354727

Fig. 78 - GM Electrical Schematic (001545-003999)

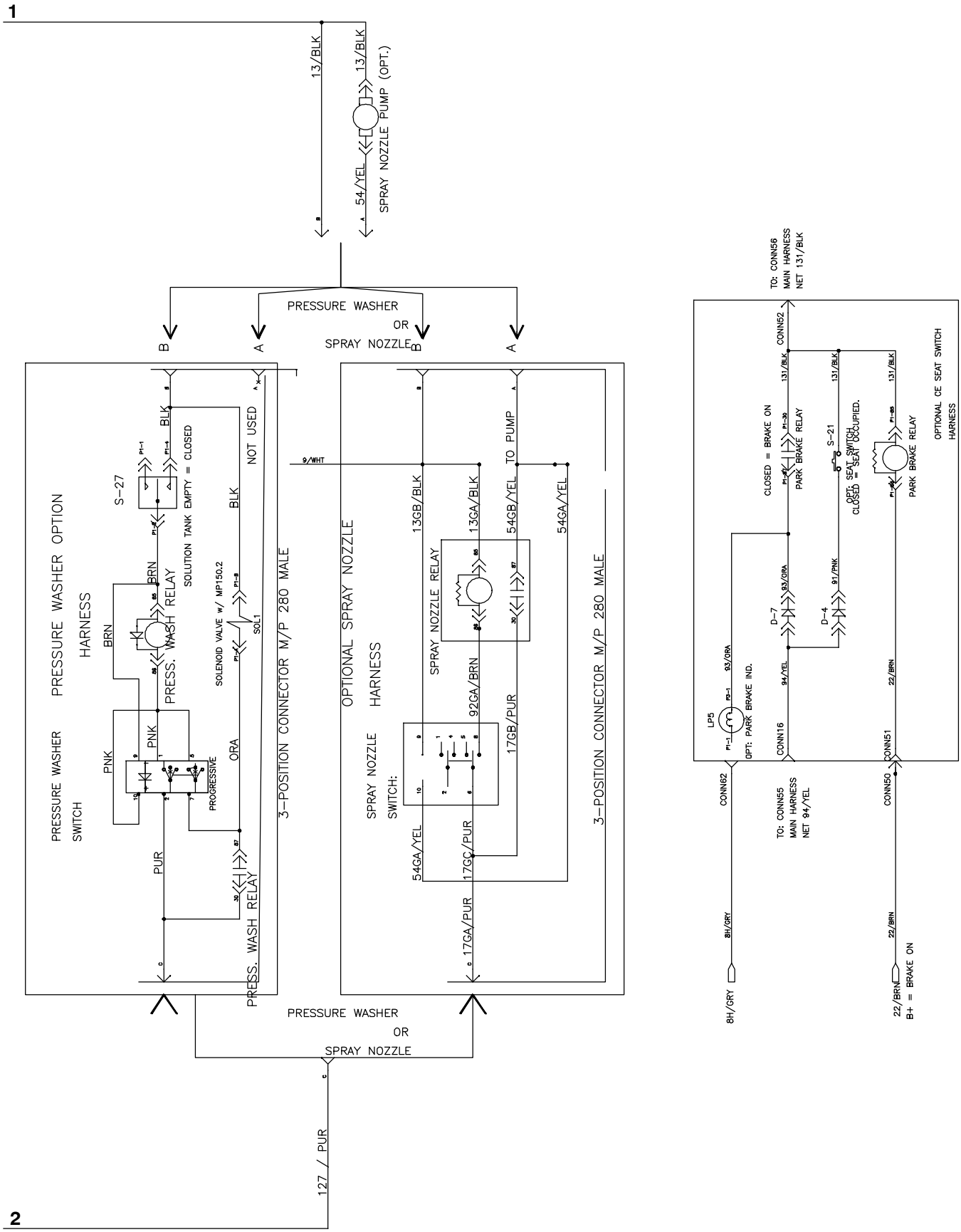

1033626 - 354727

Fig. 78 - GM Electrical Schematic (001545-003999)

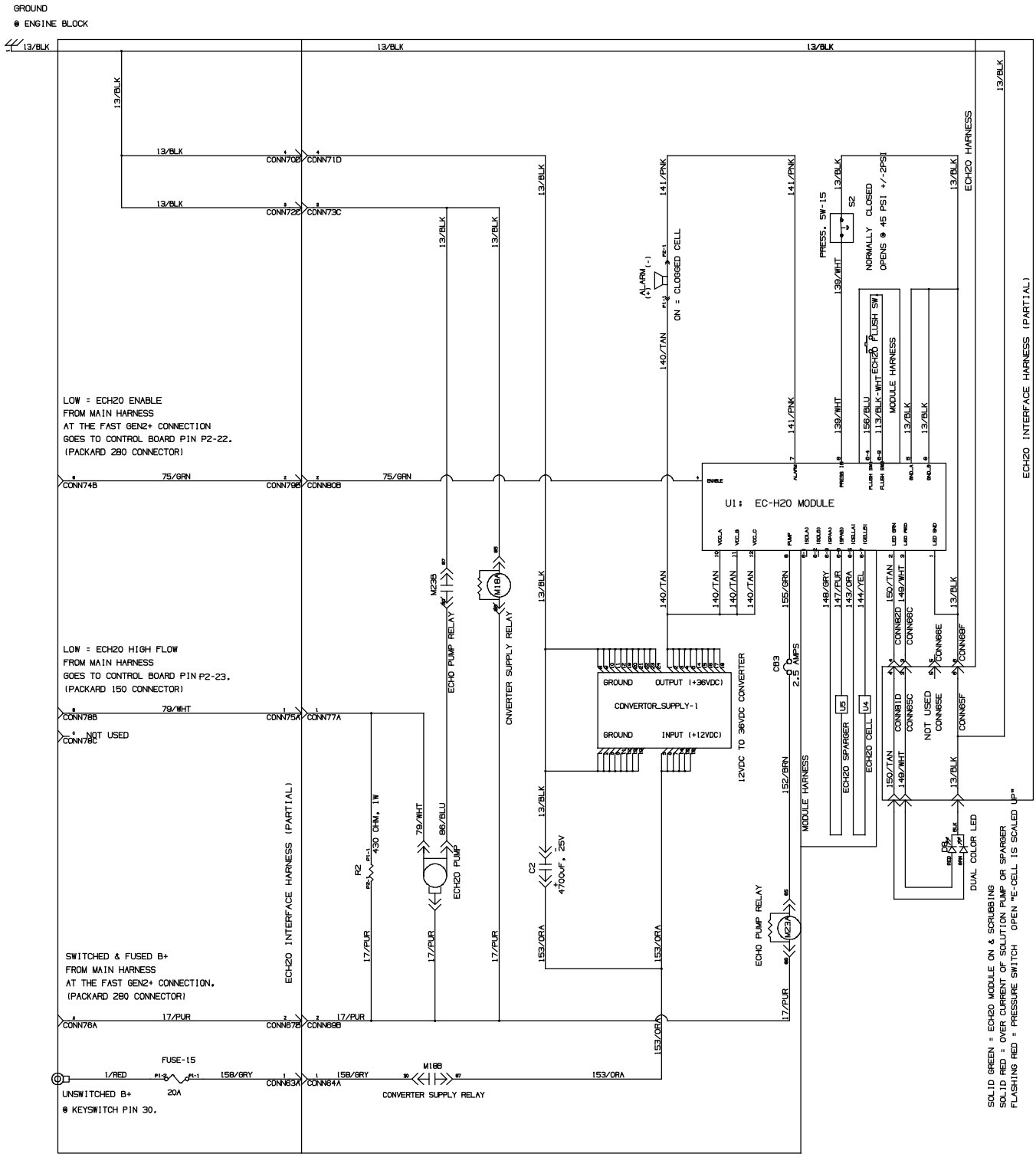

EC-H2O OPTION

1033626 - 354727

Fig. 79 - GM Electrical Schematic, Gasoline Engine Harness (000000-001320)

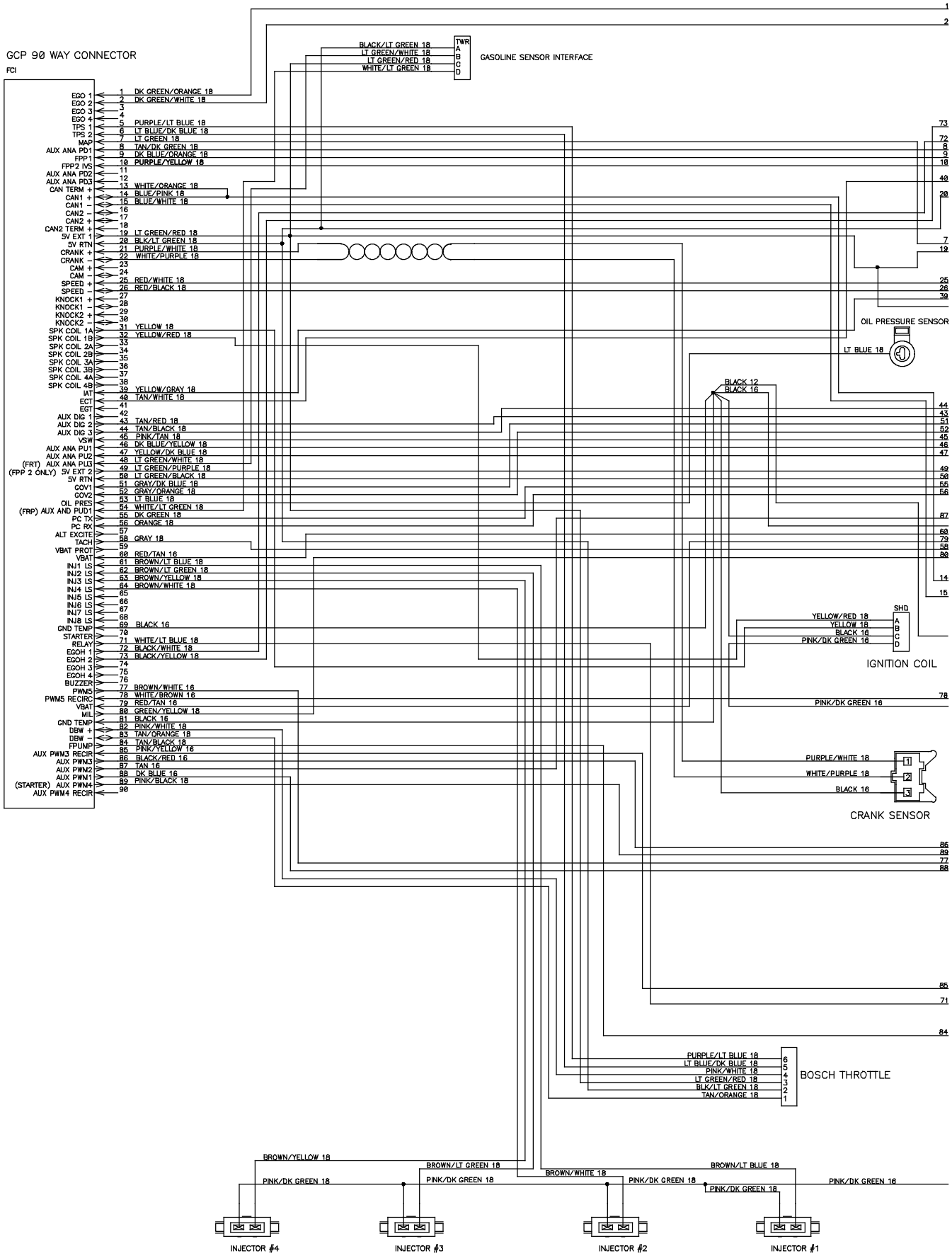

384997 - 354495

Fig. 79 - GM Electrical Schematic, Gasoline Engine Harness (000000-001320)

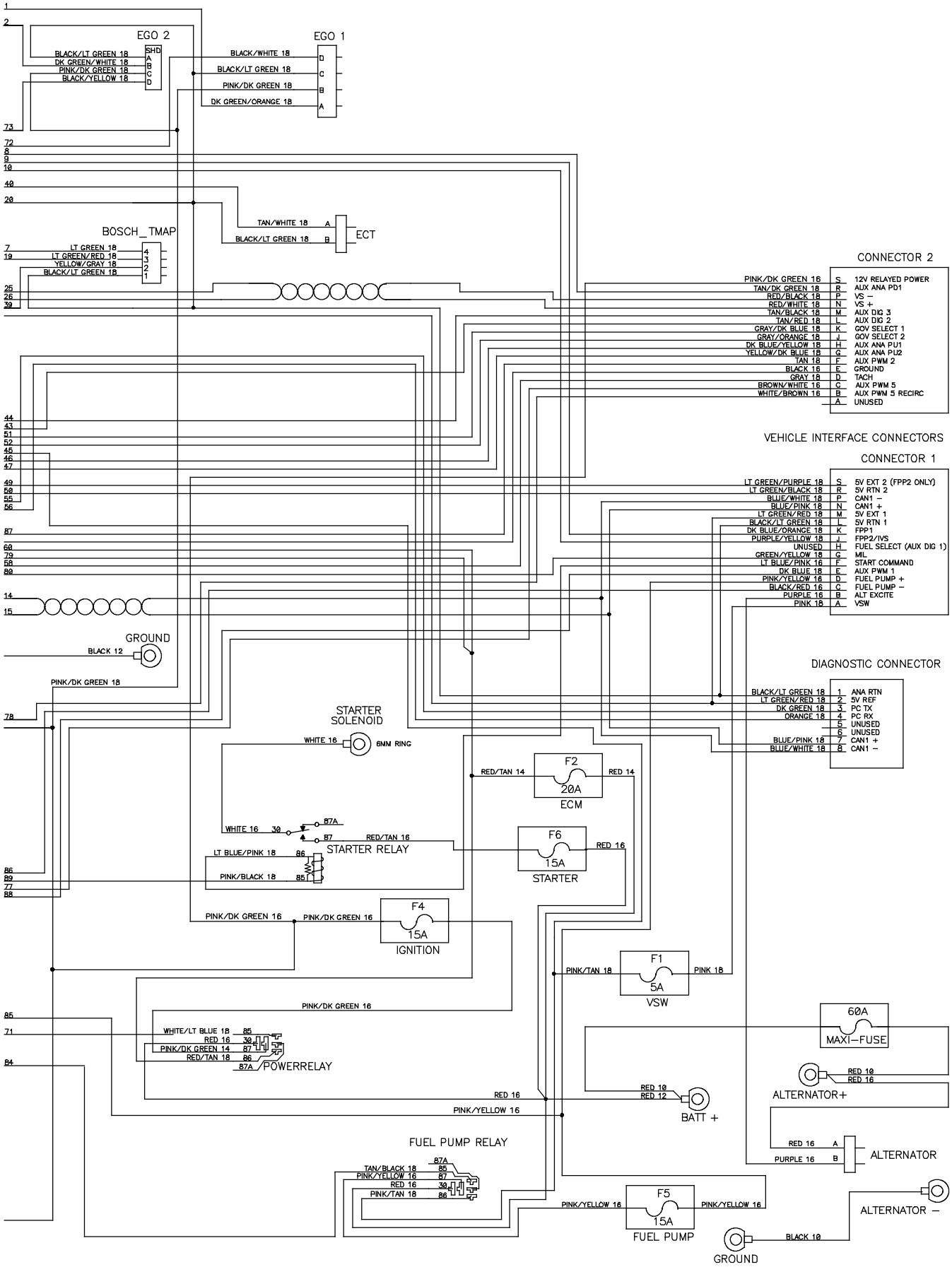

Fig. 80 - GM Electrical Schematic, Gas Engine Harness (001321-003999)

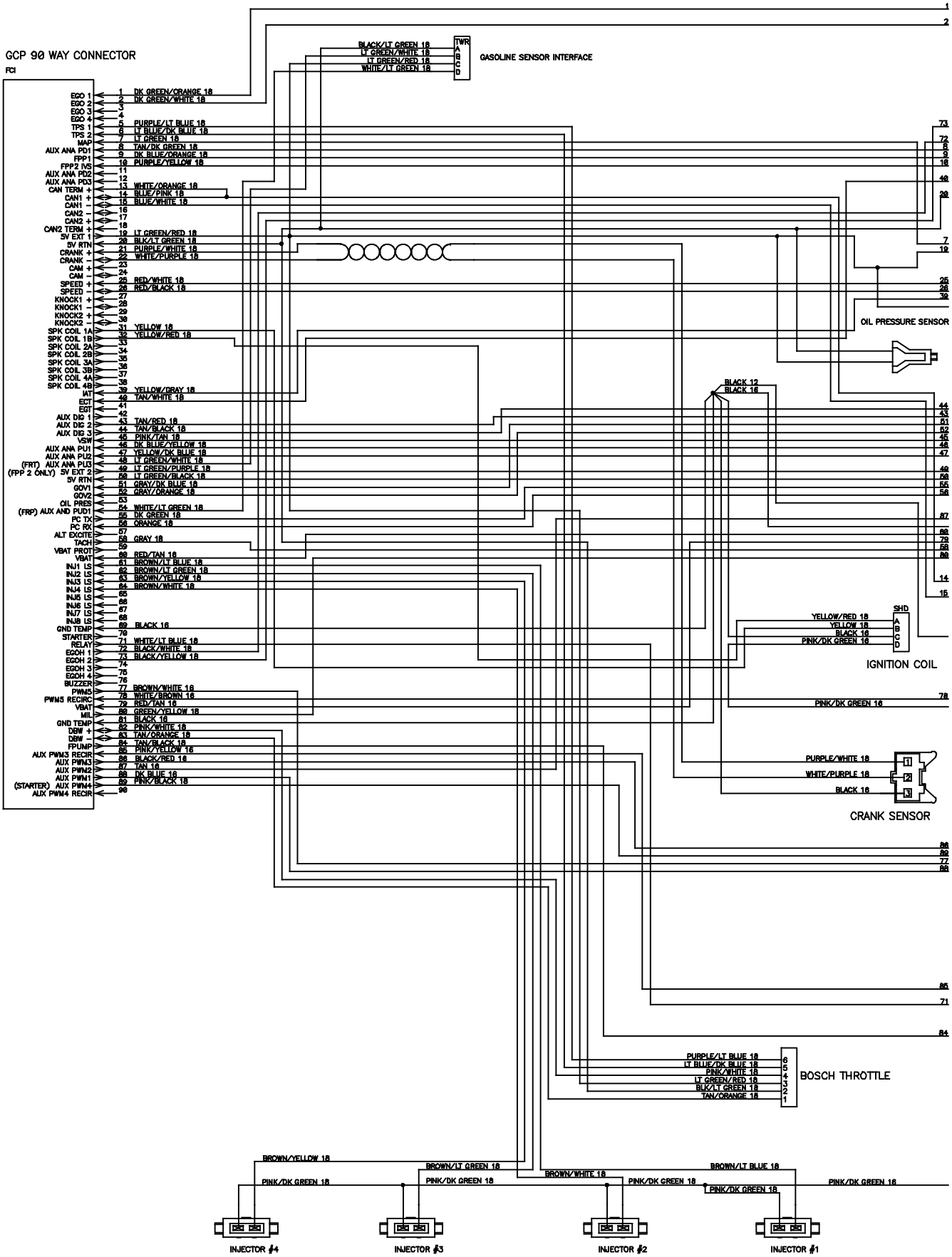

384997 - 354495

Fig. 80 - GM Electrical Schematic, Gas Engine Harness (001321-003999)

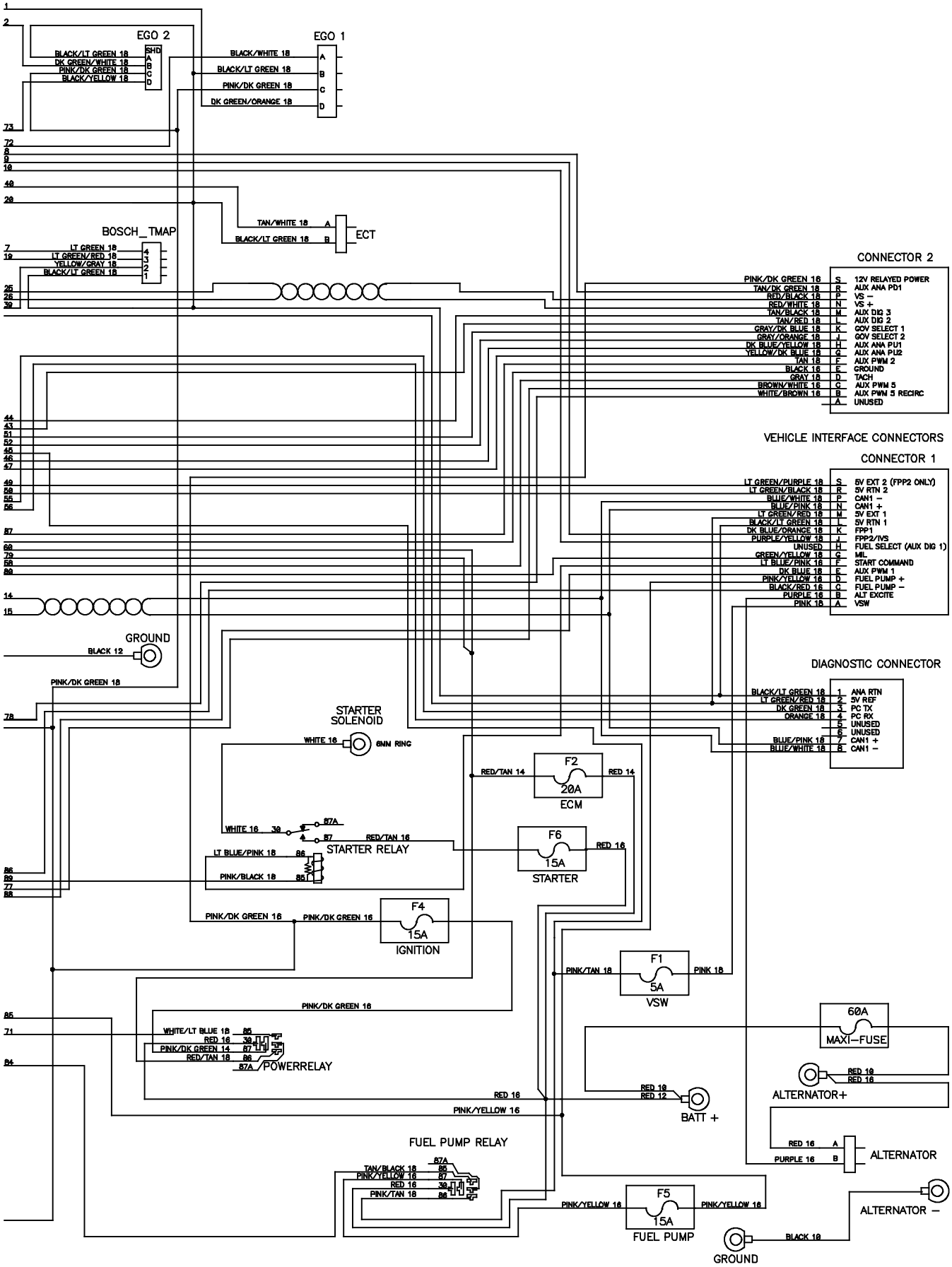

384997 - 354496

Fig. 81 - GM Electrical Schematic, LPG Engine Harness (000000-001320)

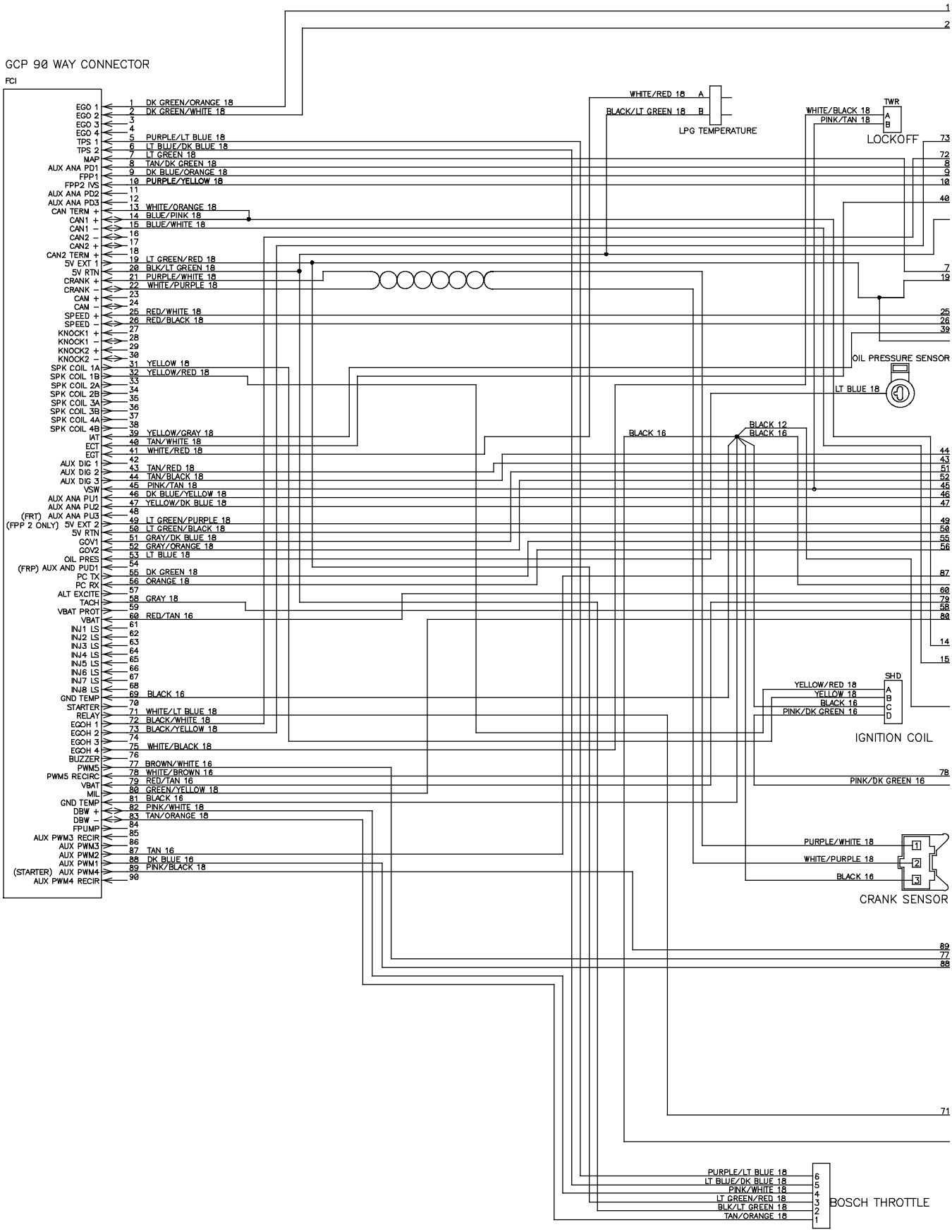

384990 - 354498

Fig. 81 - GM Electrical Schematic, LPG Engine Harness (000000-001320)

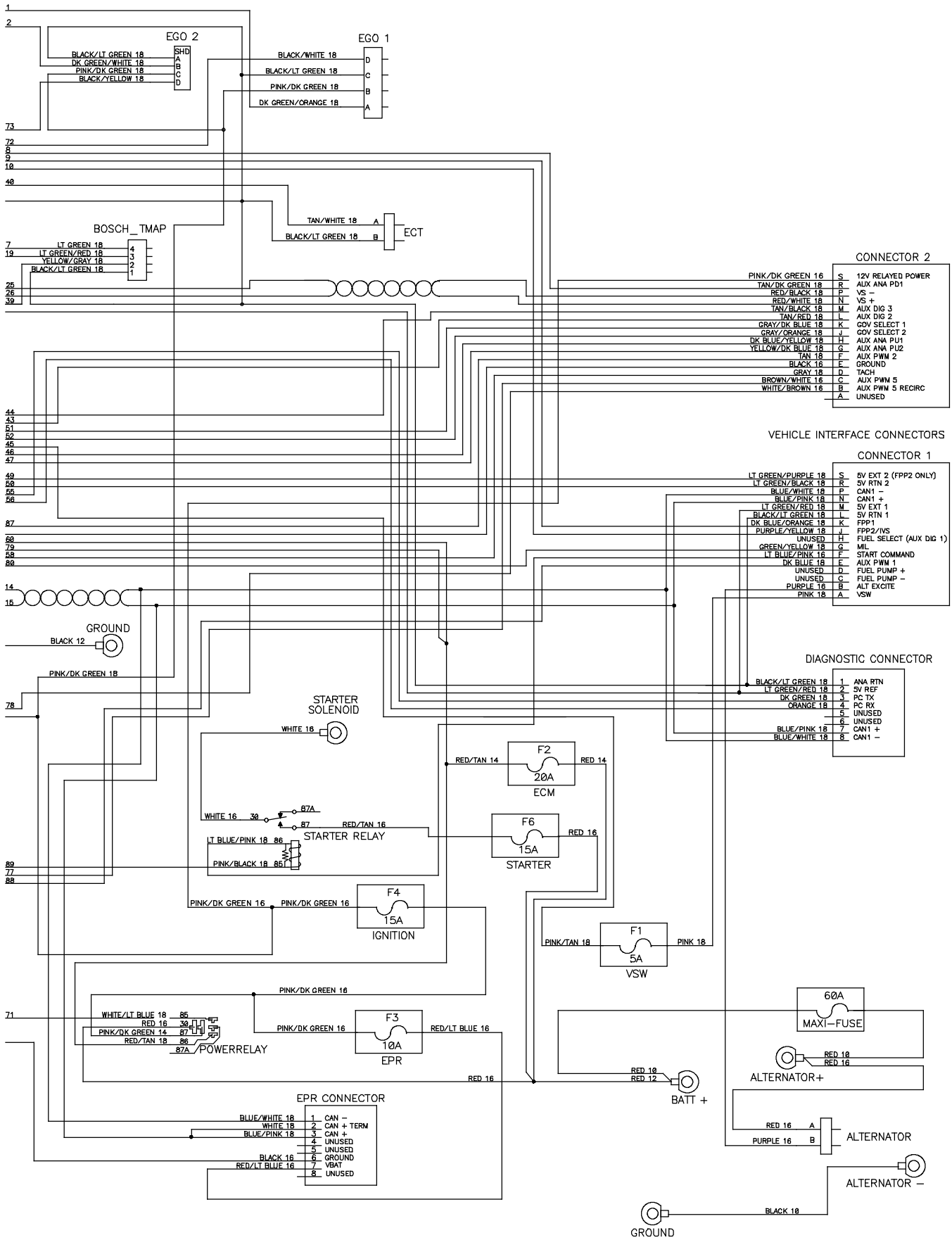

Fig. 82 - GM Electrical Schematic, LPG Engine Harness (001321-003999)

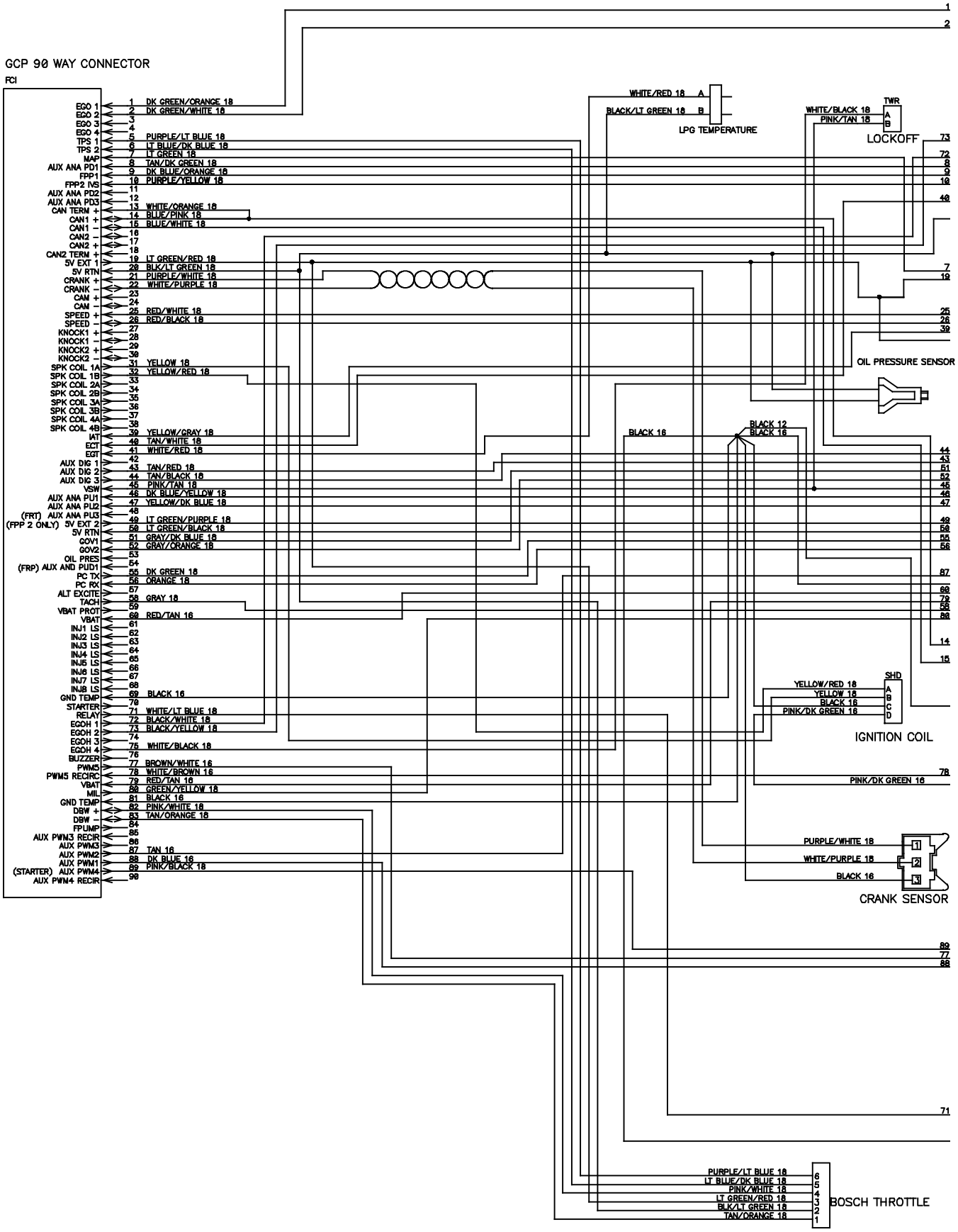

Fig. 82 - GM Electrical Schematic, LPG Engine Harness (001321-003999)

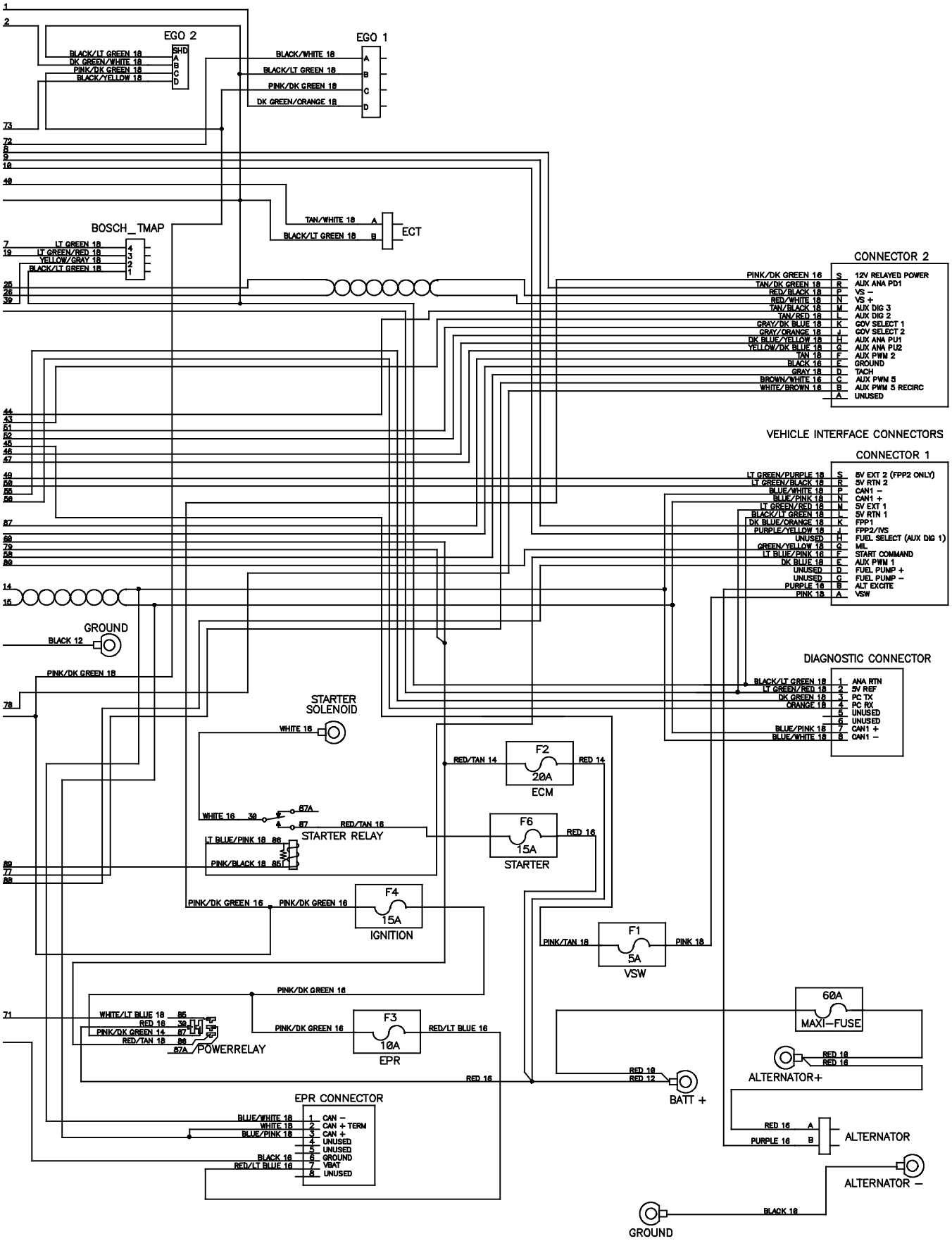

384990 - 354498

Fig. 83 - Mitsubishi Electrical Schematic (004000-)

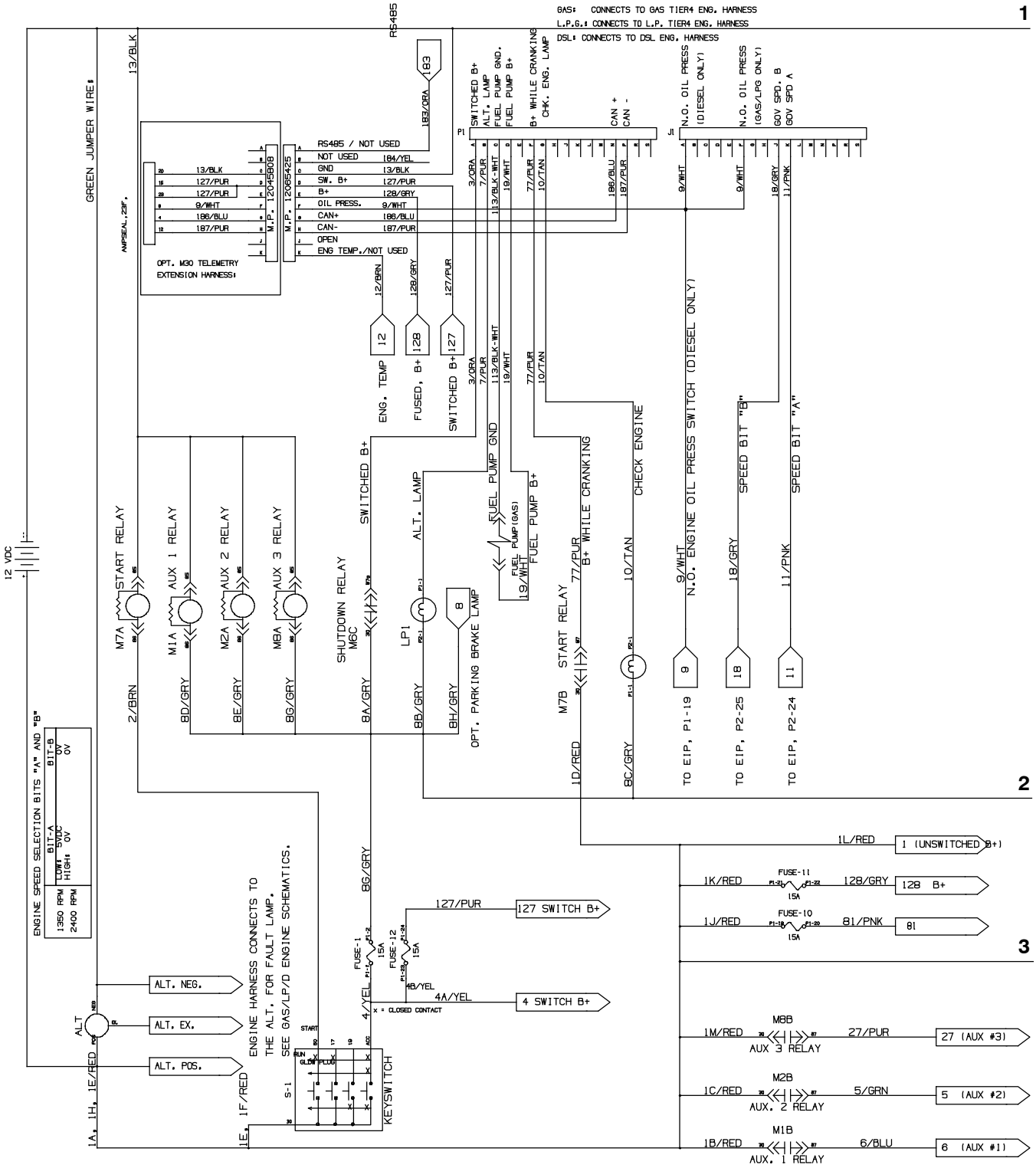

Fig. 83 - Mitsubishi Electrical Schematic (004000-)

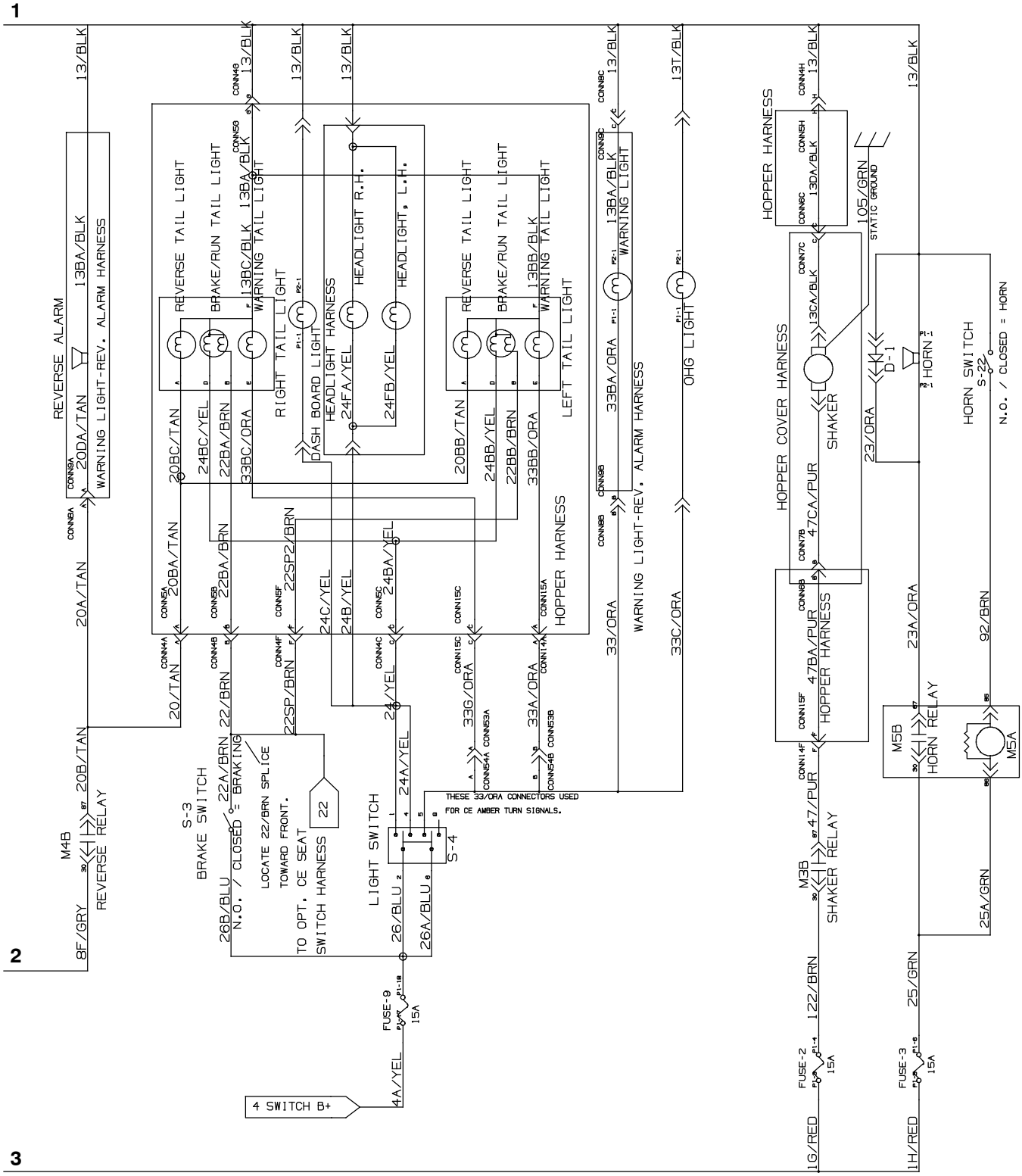

1033626 - 354727

Fig. 83 - Mitsubishi Electrical Schematic (004000-)

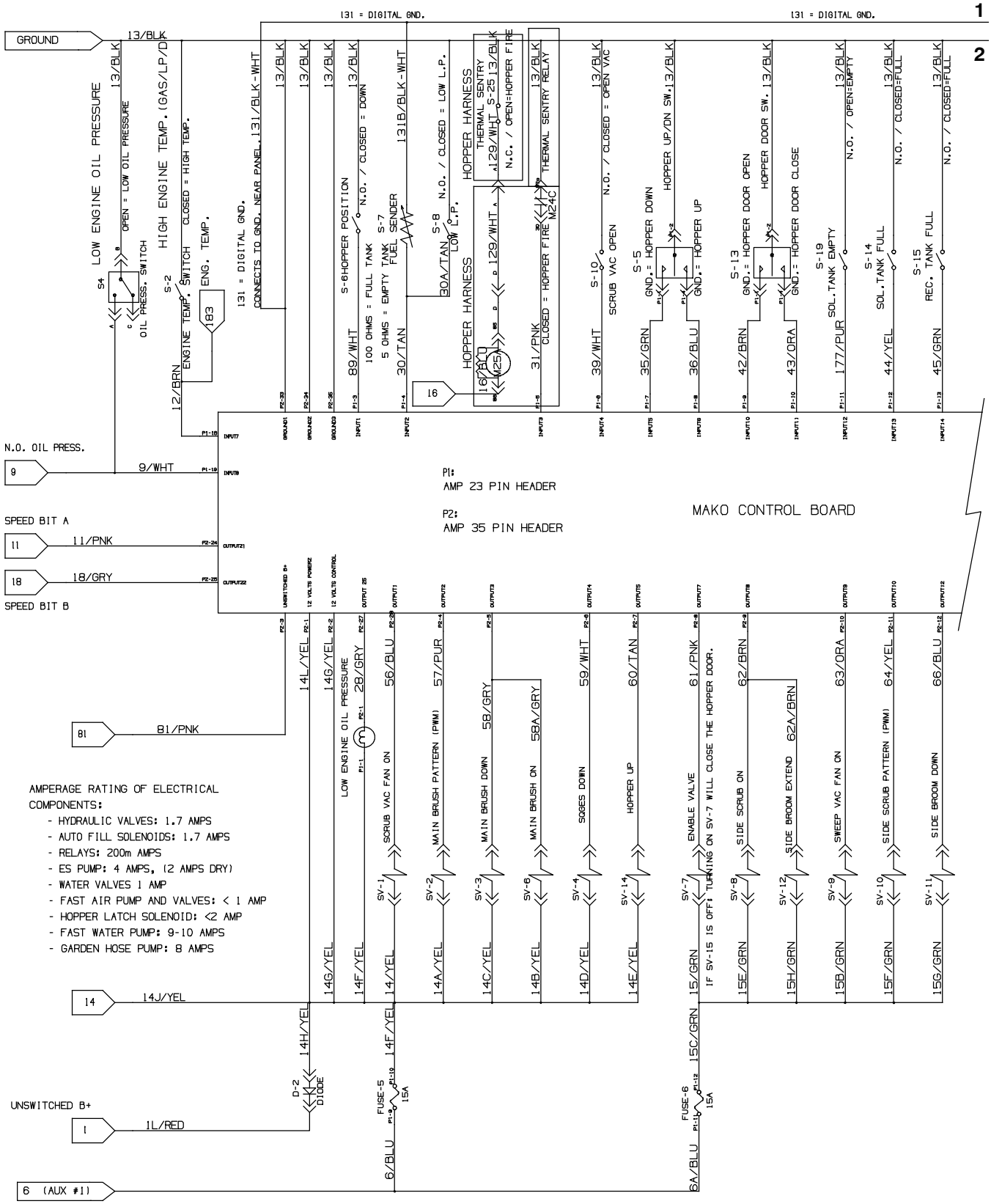

AMPERAGE RATING OF ELECTRICAL COMPONENTS:

- HYDRAULIC VALVES: 1.7 AMPS
- AUTO FILL SOLENOIDS: 1.7 AMPS
- RELAYS: 200m AMPS
- ES PUMP: 4 AMPS, (2 AMPS DRY)
- WATER VALVES 1 AMP
- FAST AIR PUMP AND VALVES: < 1 AMP
- HOPPER LATCH SOLENOID: <2 AMP
- FAST WATER PUMP: 9-10 AMPS
- GARDEN HOSE PUMP: 8 AMPS

1033626 - 354727

Fig. 83 - Mitsubishi Electrical Schematic (004000-)

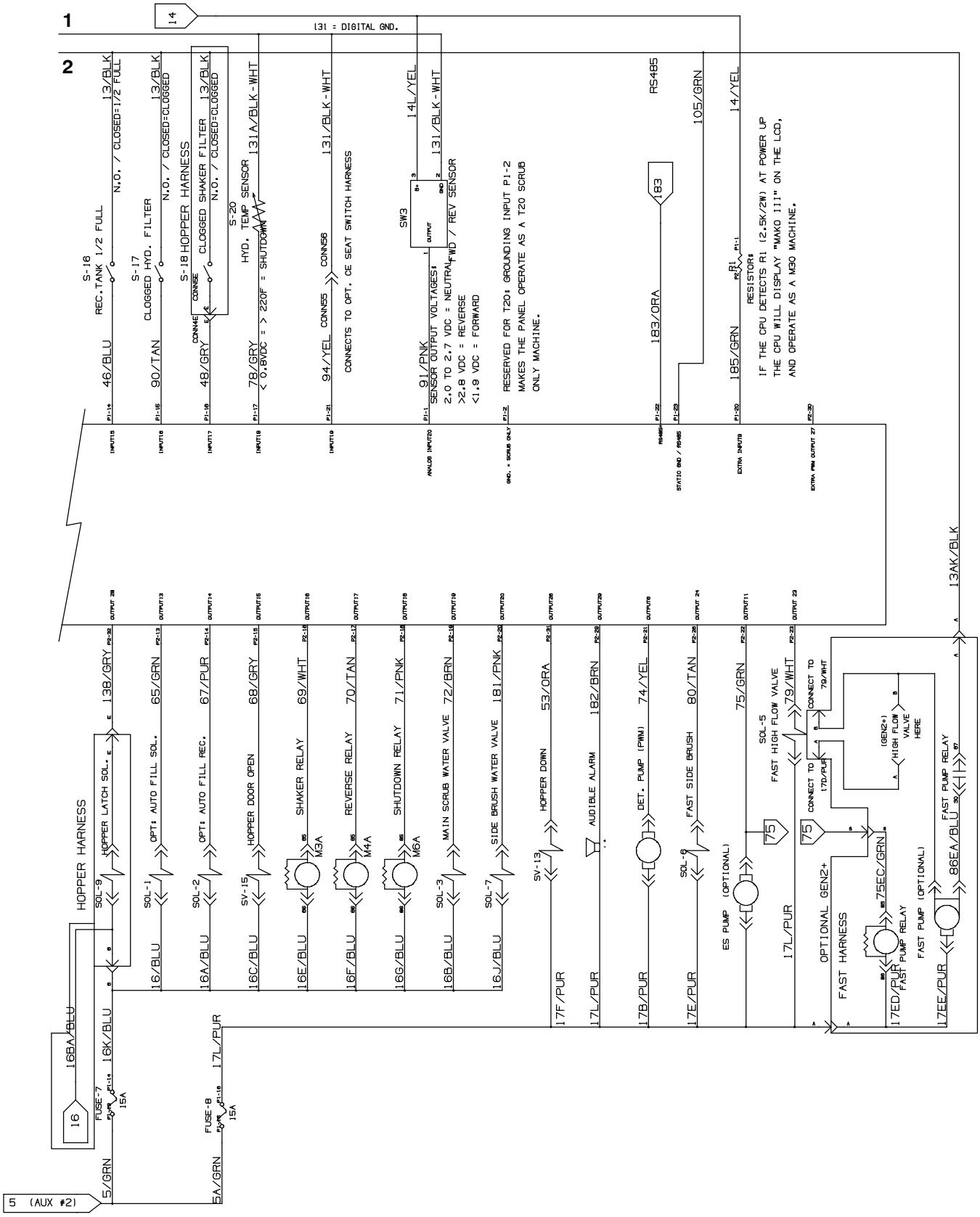

1033626 - 354727

Fig. 83 - Mitsubishi Electrical Schematic (004000-)

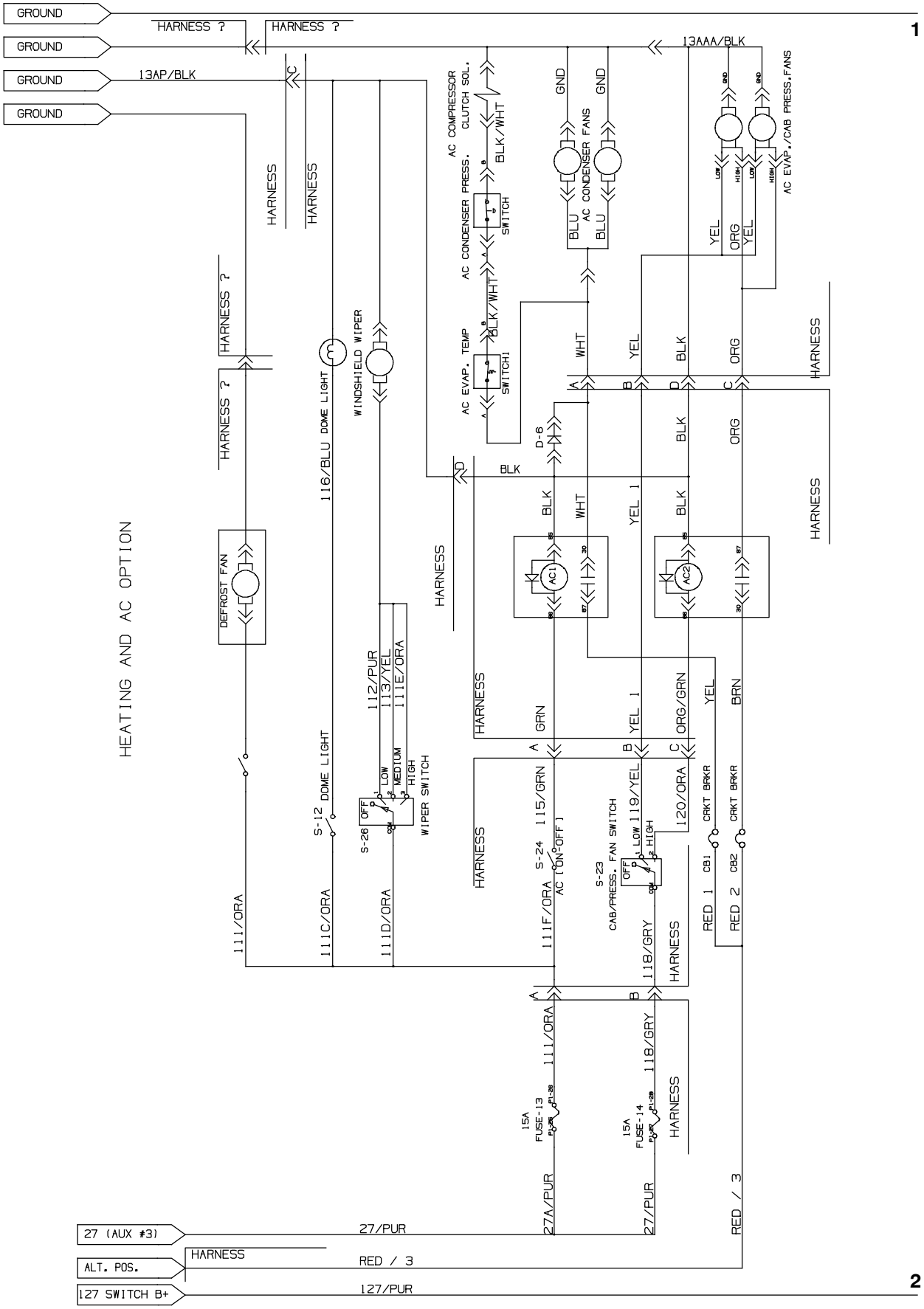

1033626 - 354727

Fig. 83 - Mitsubishi Electrical Schematic (004000-)

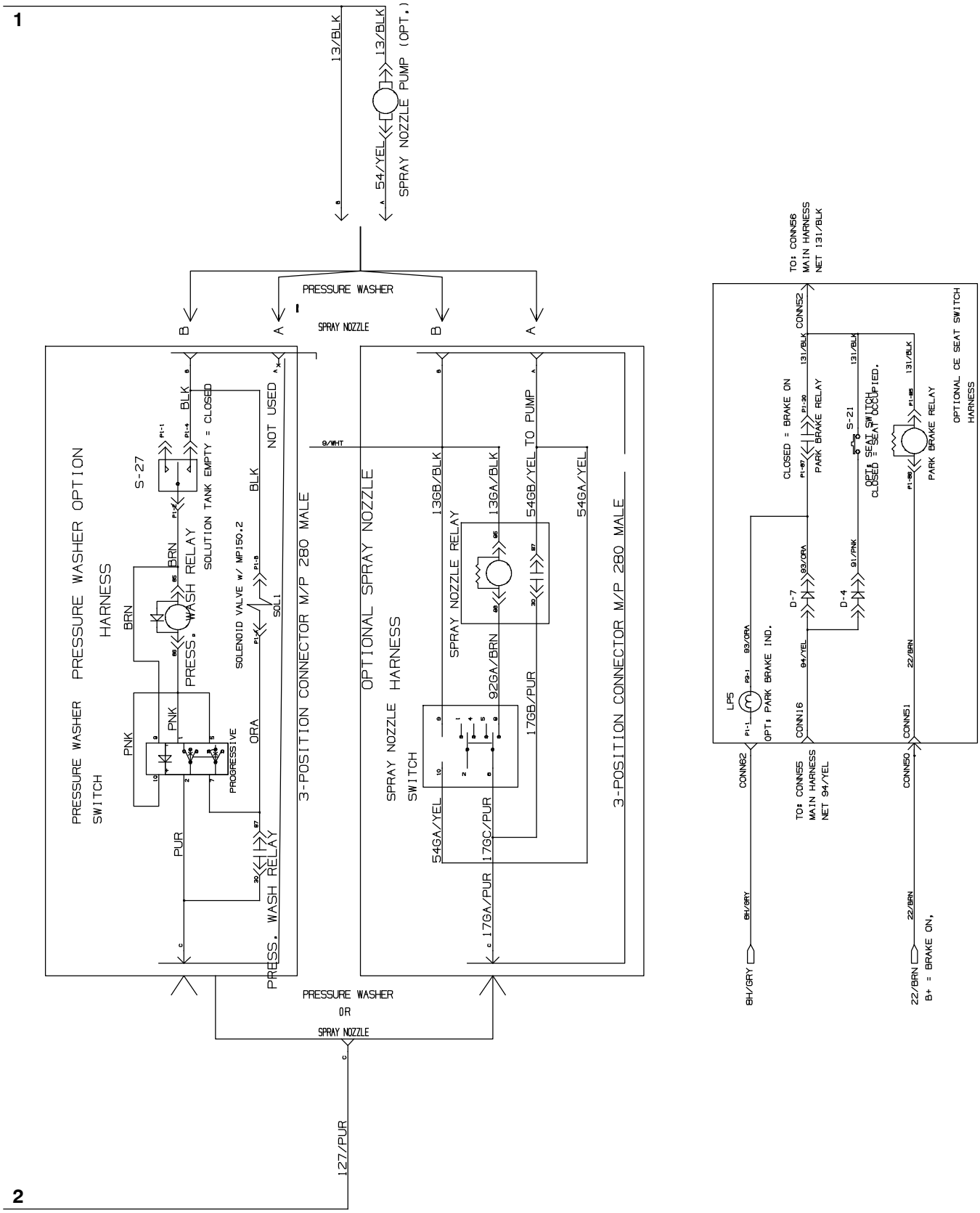

1033626 - 354727

Fig. 83 - Mitsubishi Electrical Schematic (004000-)

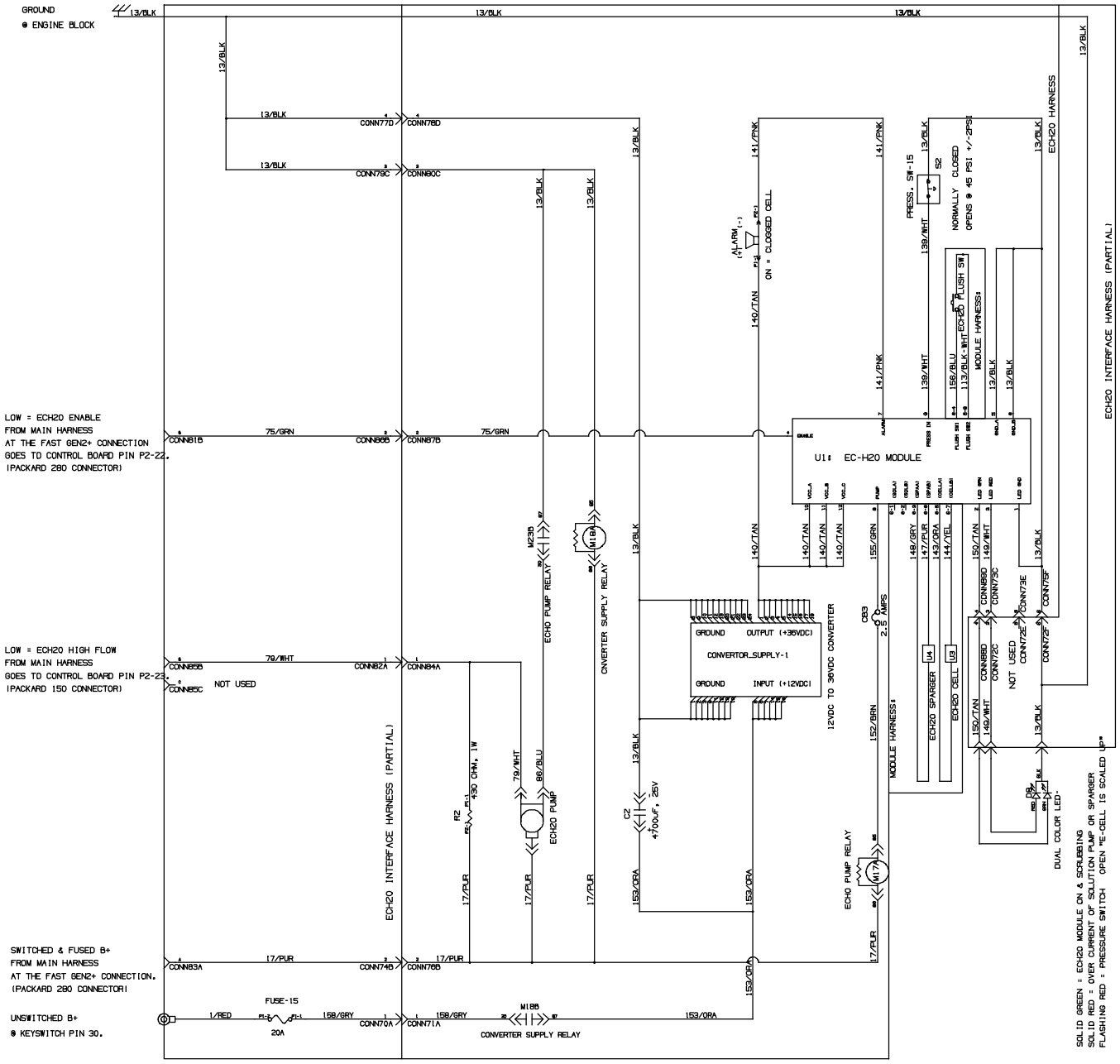

EC-H2O OPTION

1033626 - 354727

Fig. 84 - Mitsubishi Electrical Schematic, Gas Engine Harness (004000-)

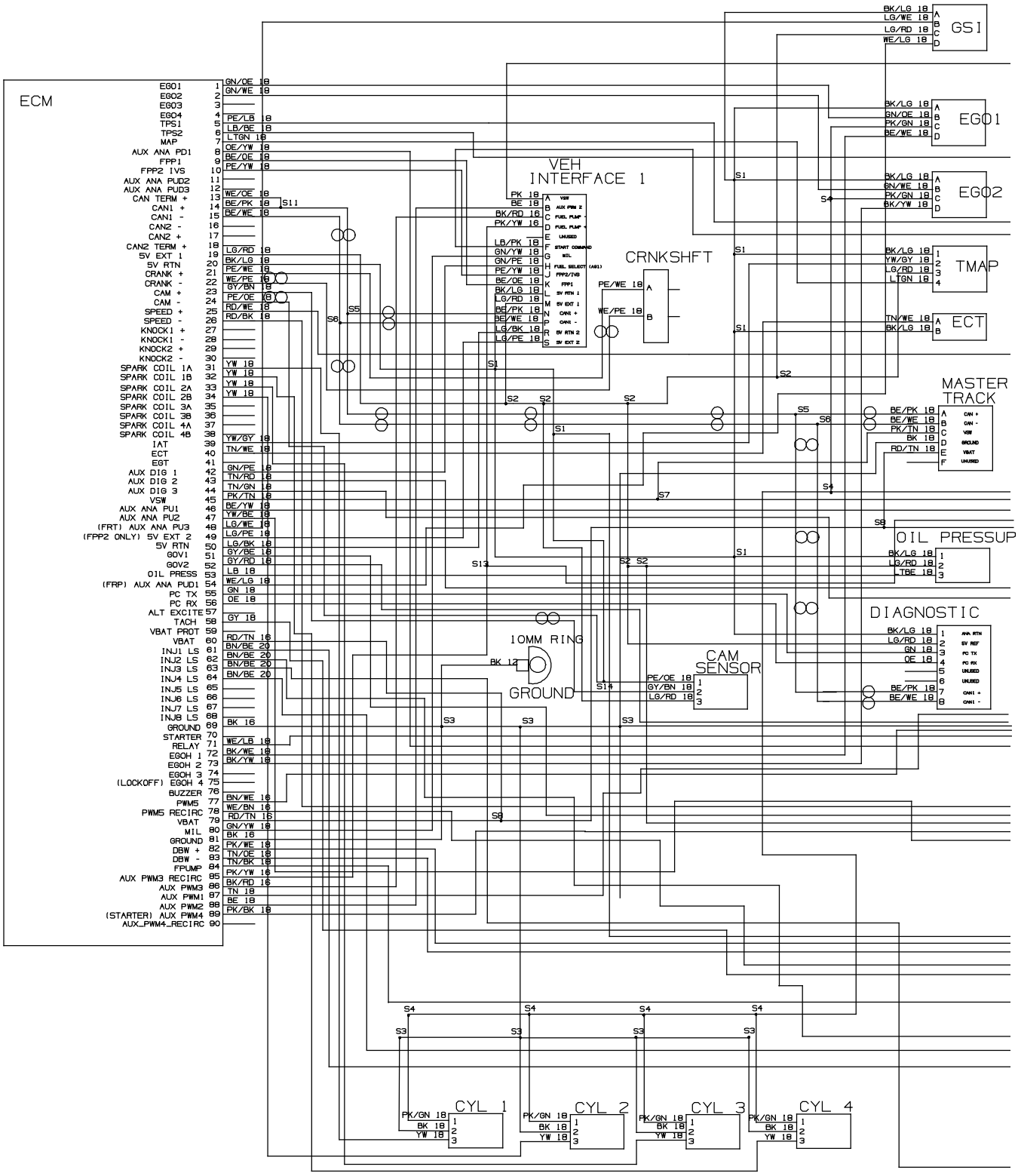

1071653- 356303

Fig. 84 - Mitsubishi Electrical Schematic, Gas Engine Harness (004000-)

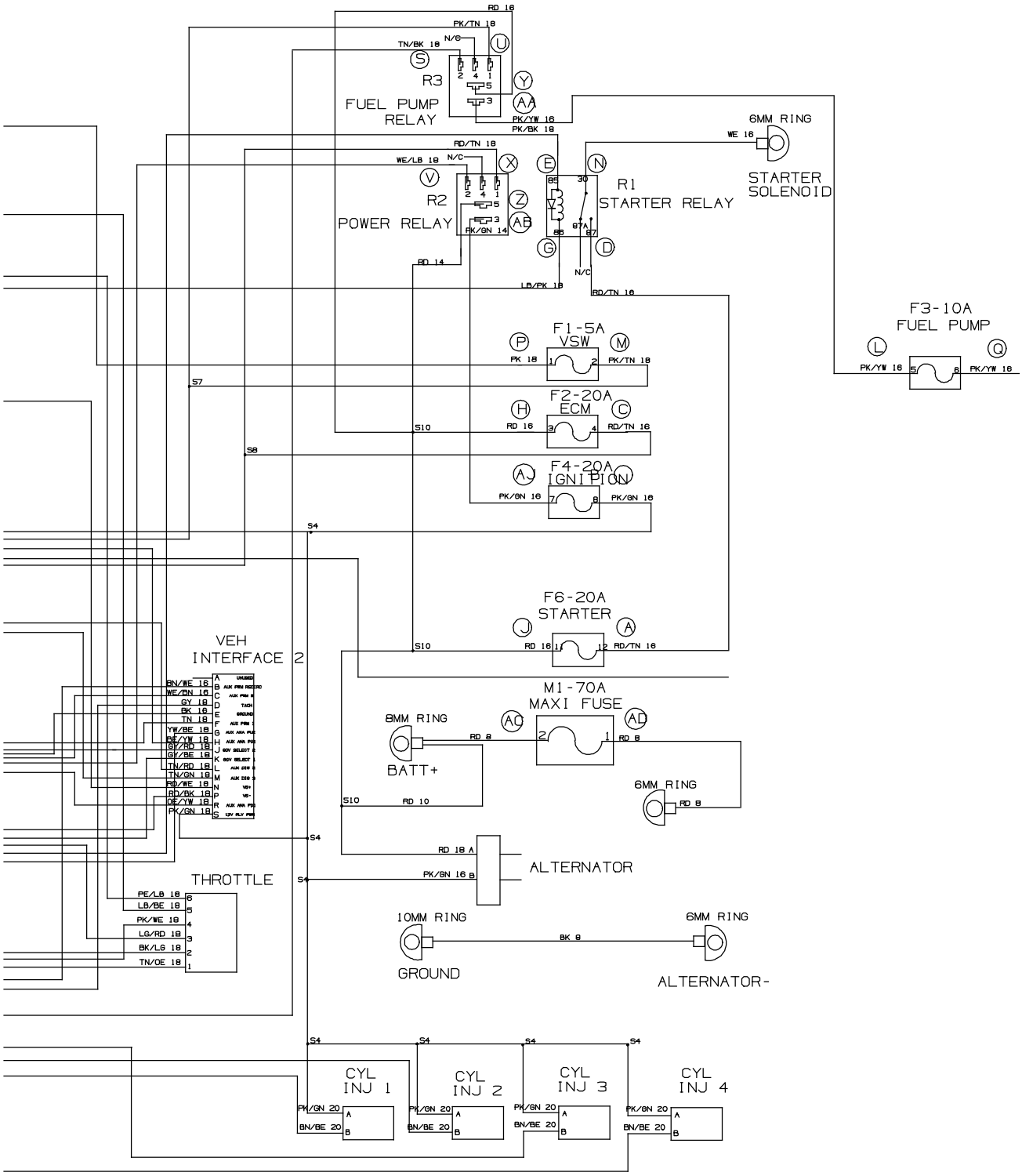

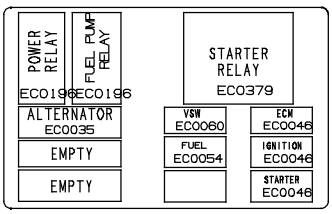

LOADING VIEW

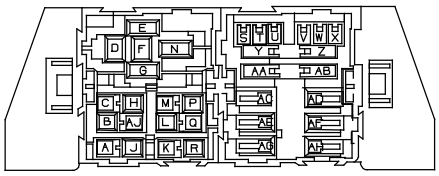

CB0186
WIRE INSERTION VIEW

1071653- 356303

Fig. 85 - Mitsubishi Electrical Schematic, LPG Engine Harness (004000-)

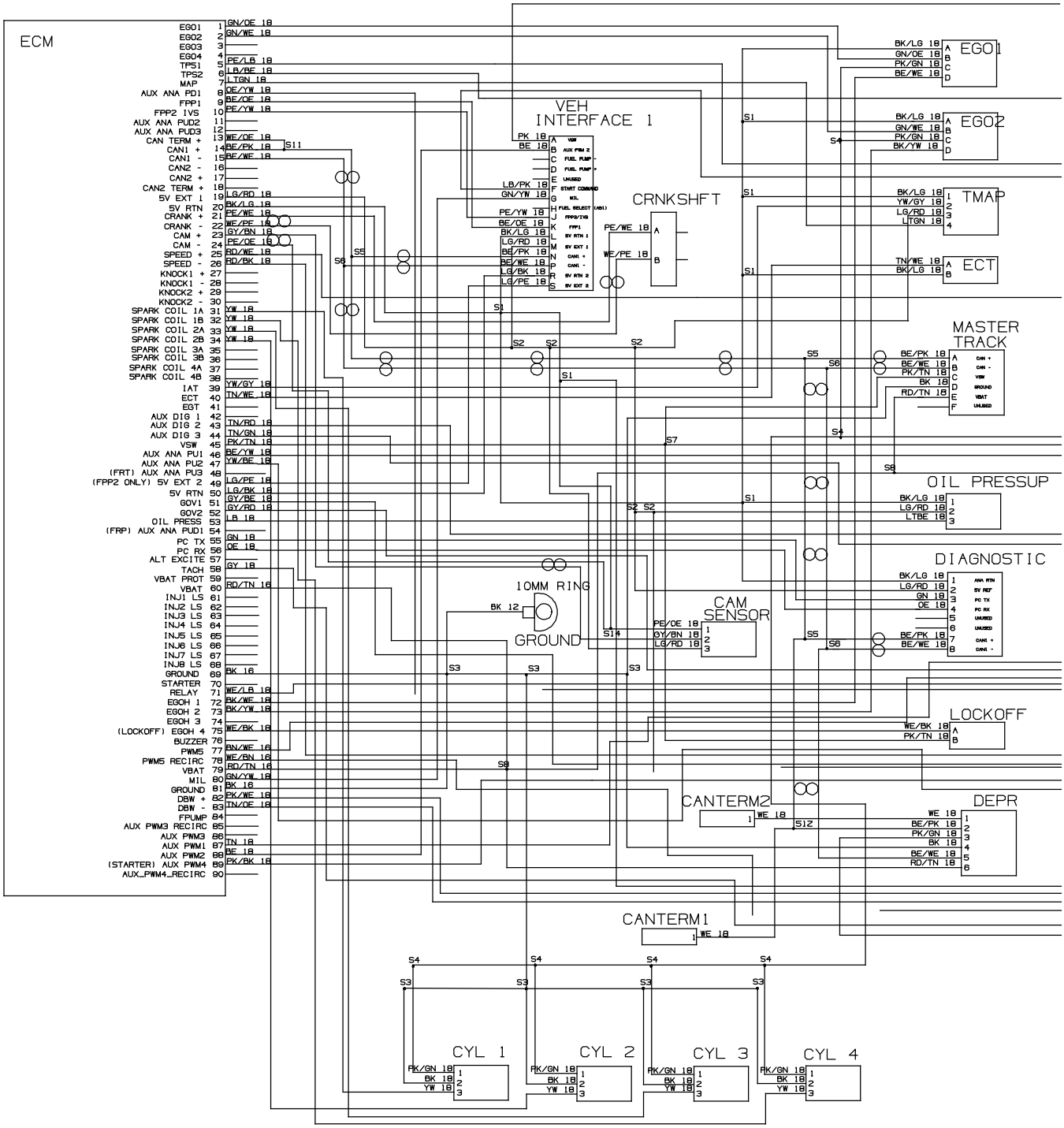

1071654- 356304

Fig. 85 - Mitsubishi Electrical Schematic, LPG Engine Harness (004000-)

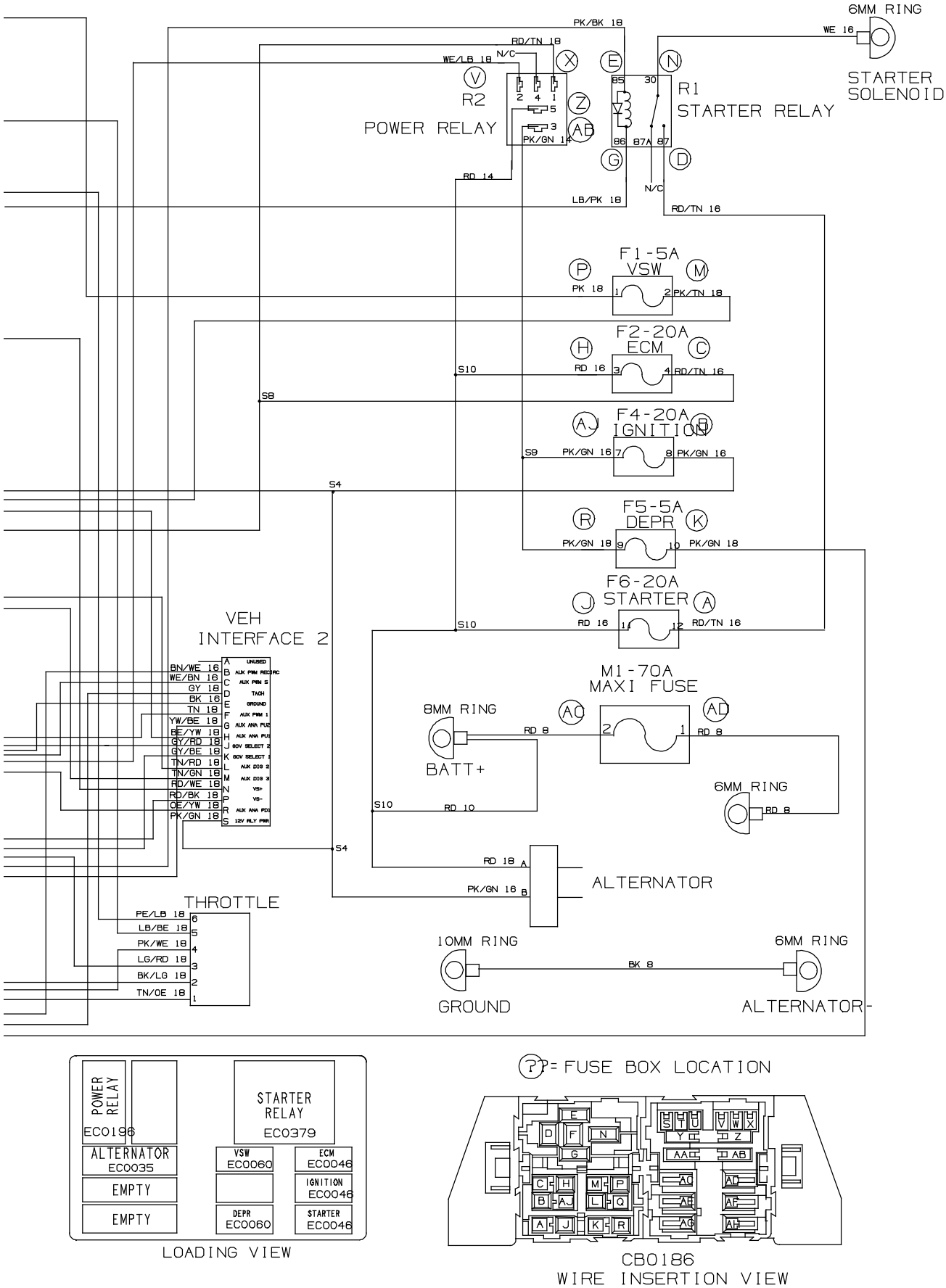

1071654- 356304

Fig. 86 - Electrical Wire Harness Group, Main

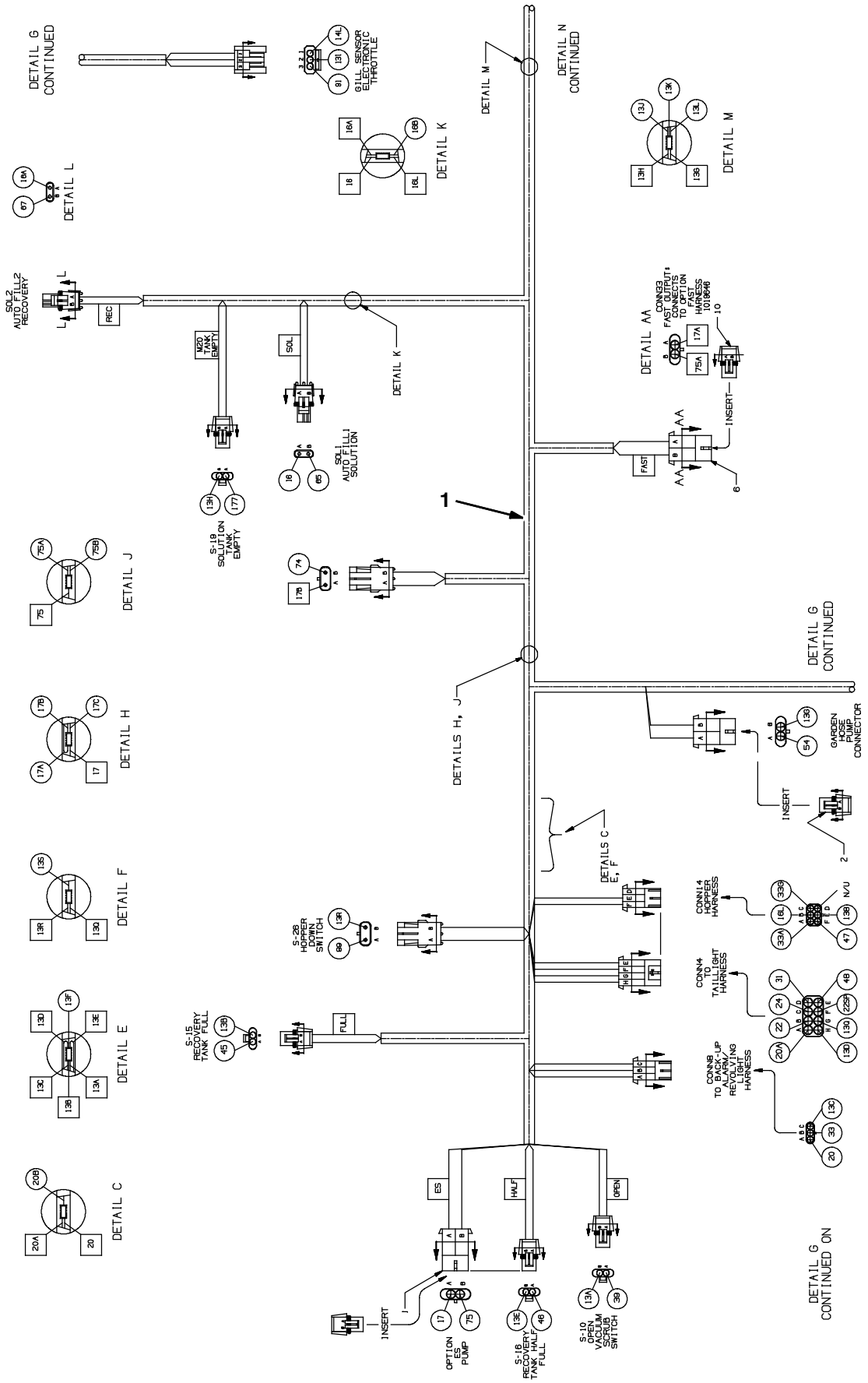

1033623 - 354716

Fig. 86 - Electrical Wire Harness Group, Main

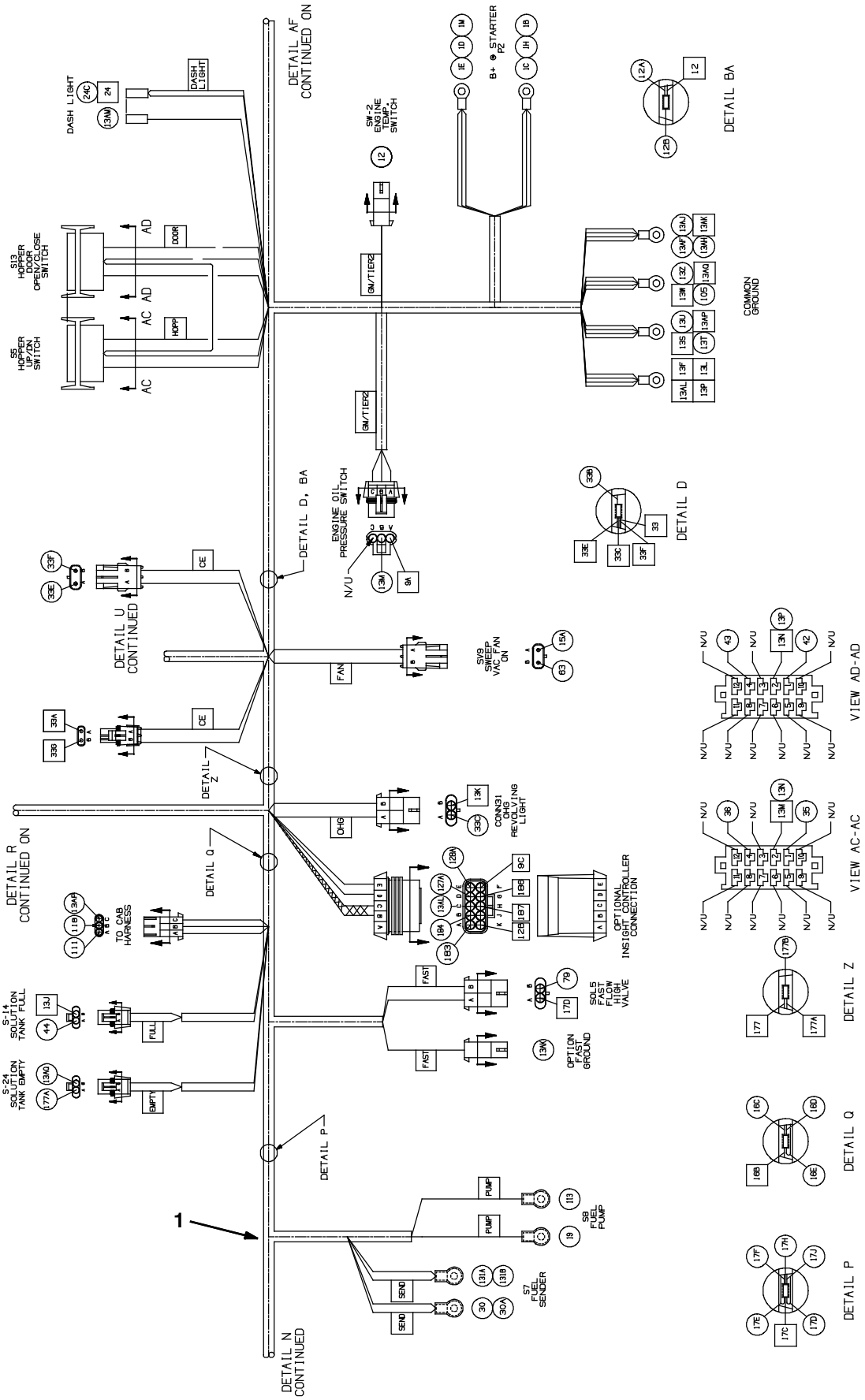

1033623 - 354716

Fig. 86 - Electrical Wire Harness Group, Main

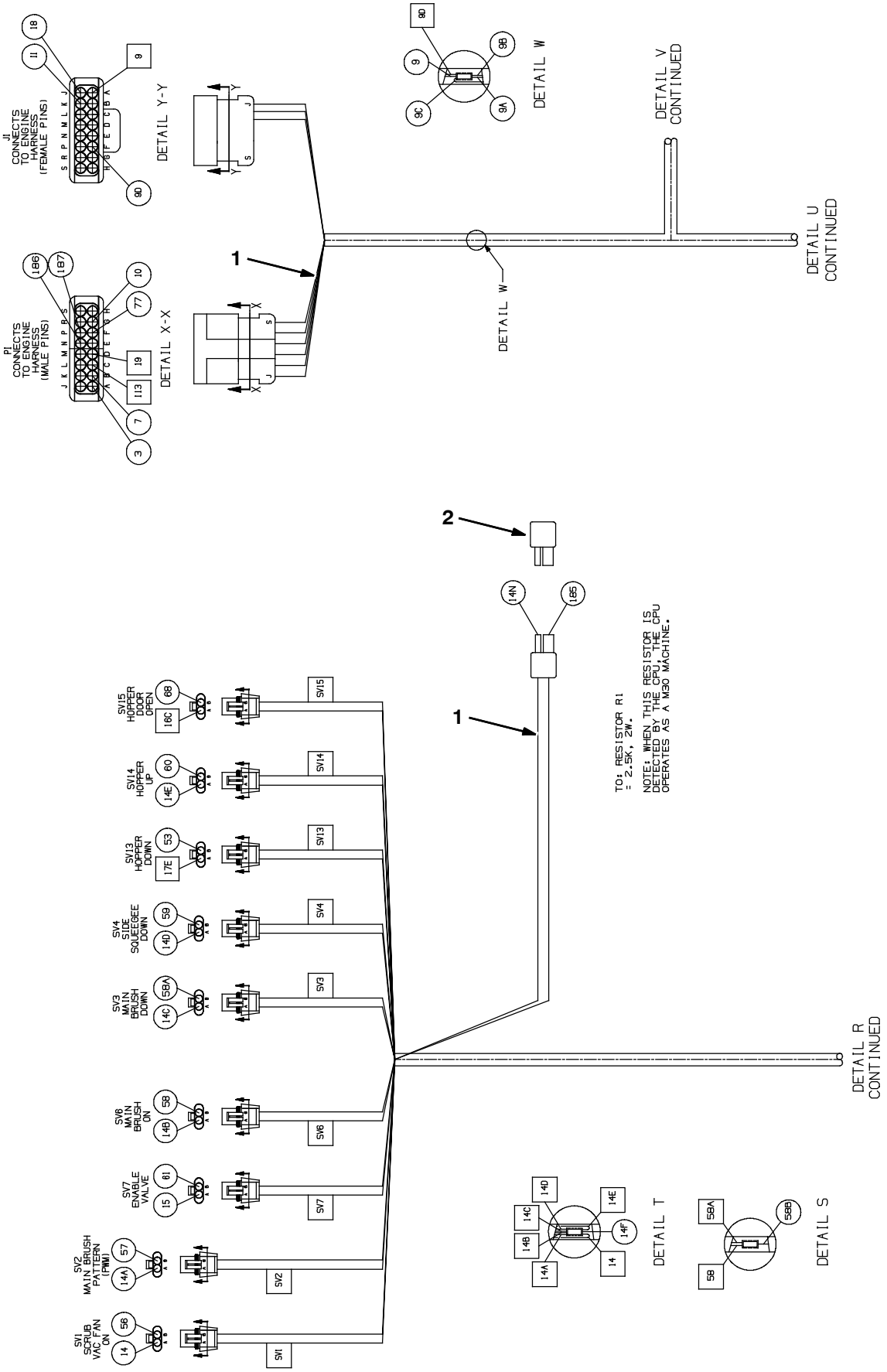

1033623 - 354716

Fig. 86 - Electrical Wire Harness Group, Main

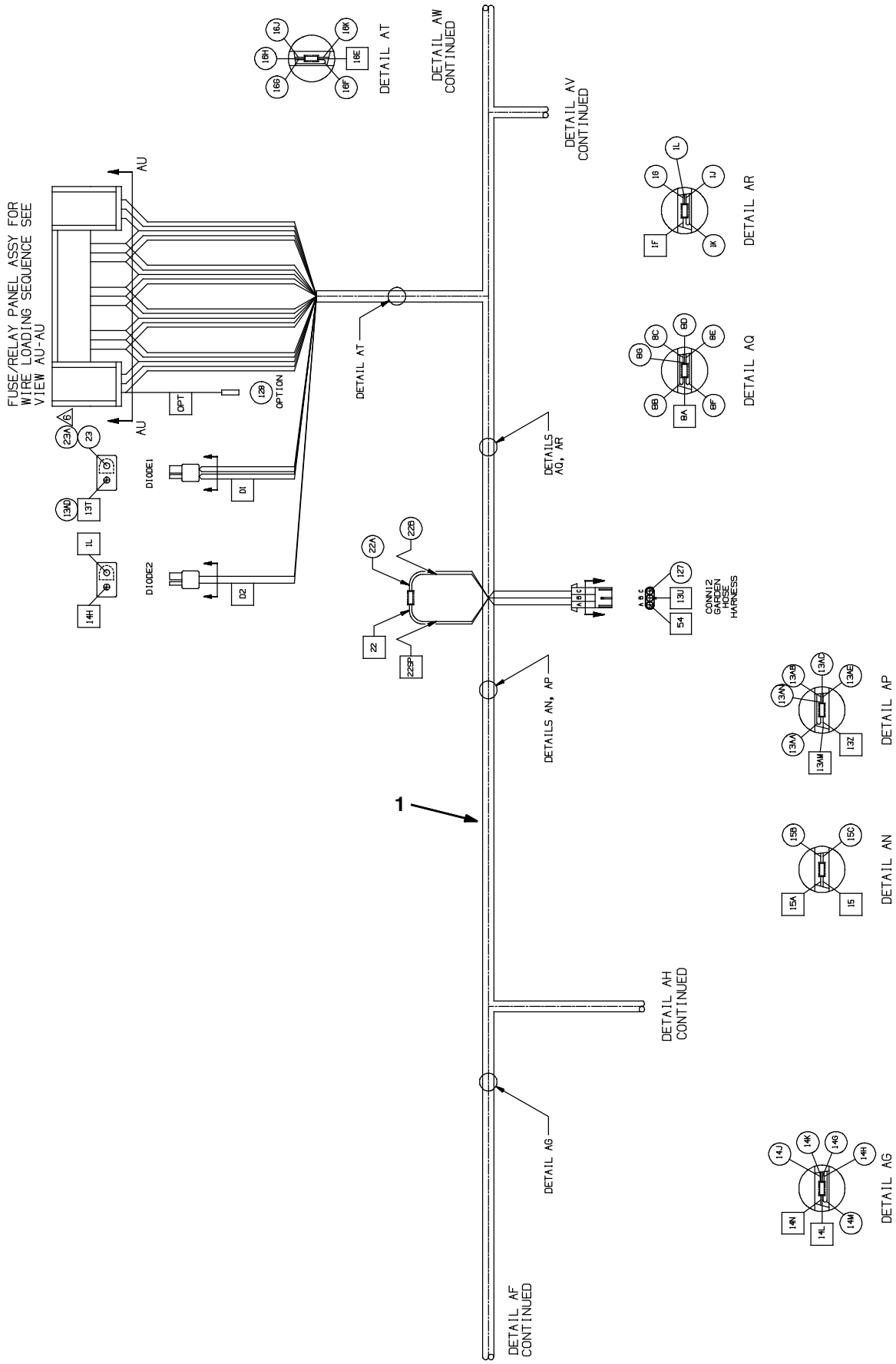

1033623 - 354716

Fig. 86 - Electrical Wire Harness Group, Main

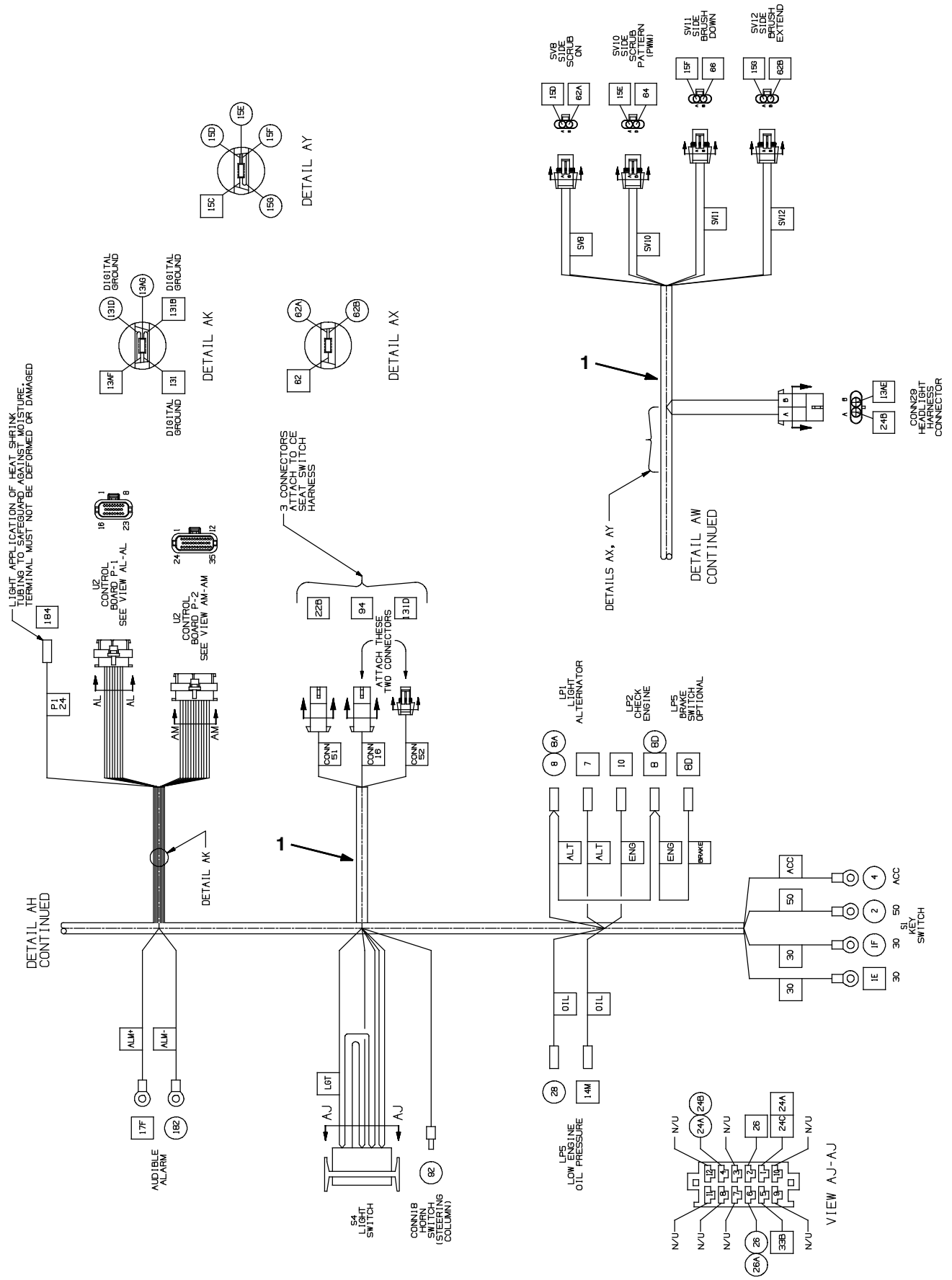

1033623 - 354716

Fig. 86 - Electrical Wire Harness Group, Main

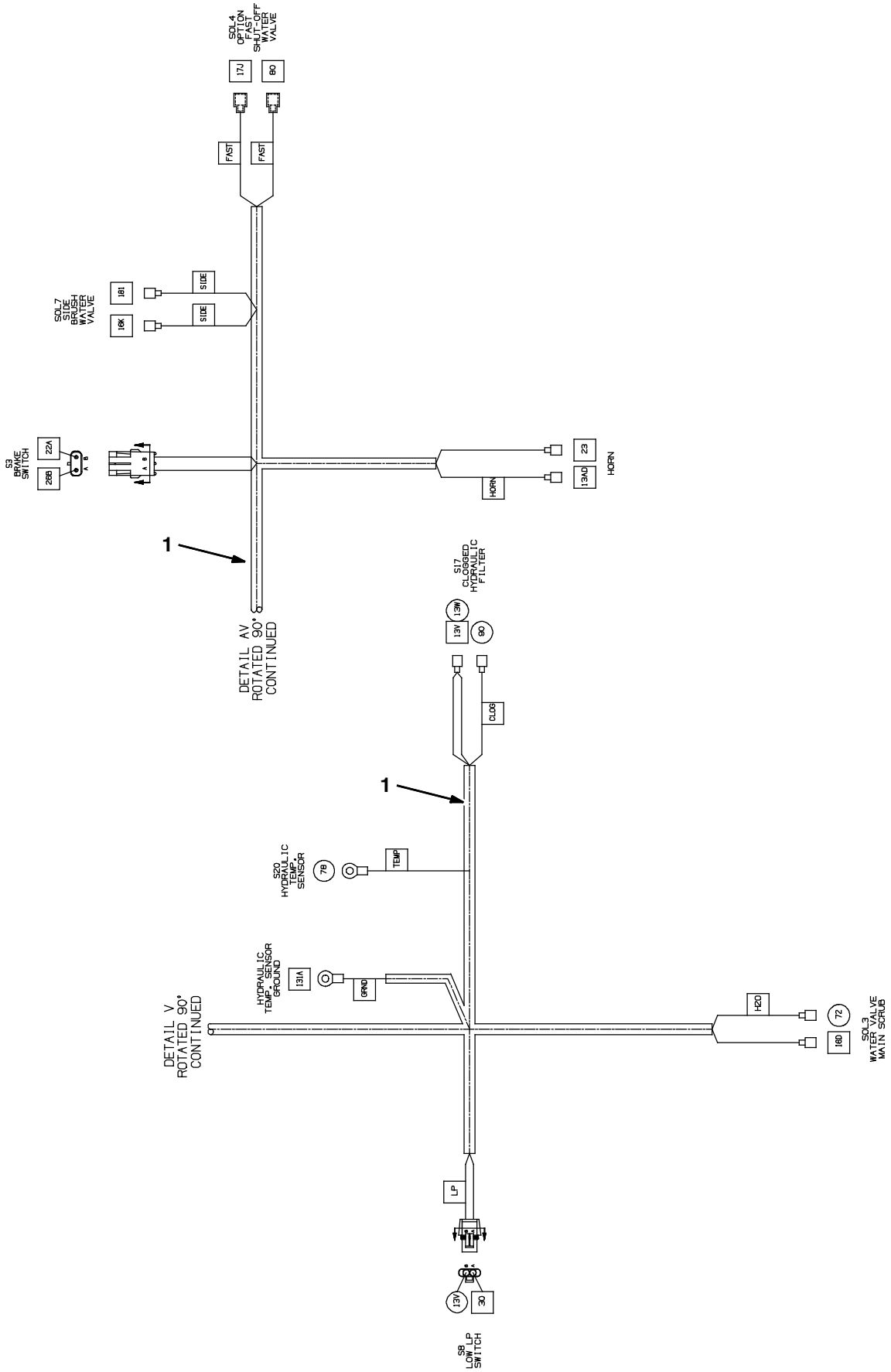

1033623 - 354716

Fig. 86 - Electrical Wire Harness Group, Main

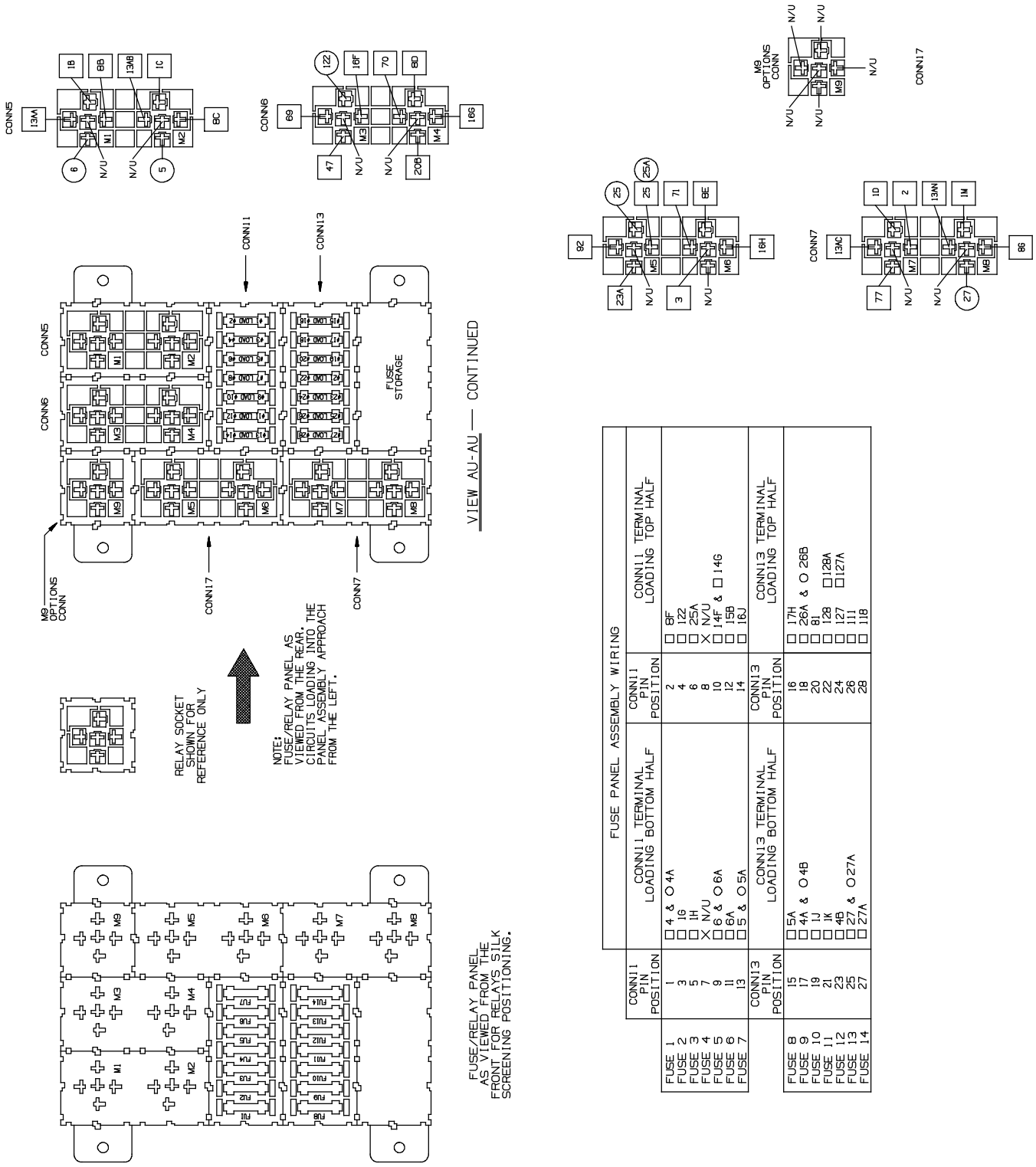

1033623 - 354716

Ref.	Part No.	Serial Number	Description	Qty.
1	1071895	(000000-)	Harness, Main [M30]	1
2	1058988	(000000-)	Resistor, Ele, Plug [2.5K , 1W]	1

Fig. 87 - Electrical Wire Harness Group, Headlight

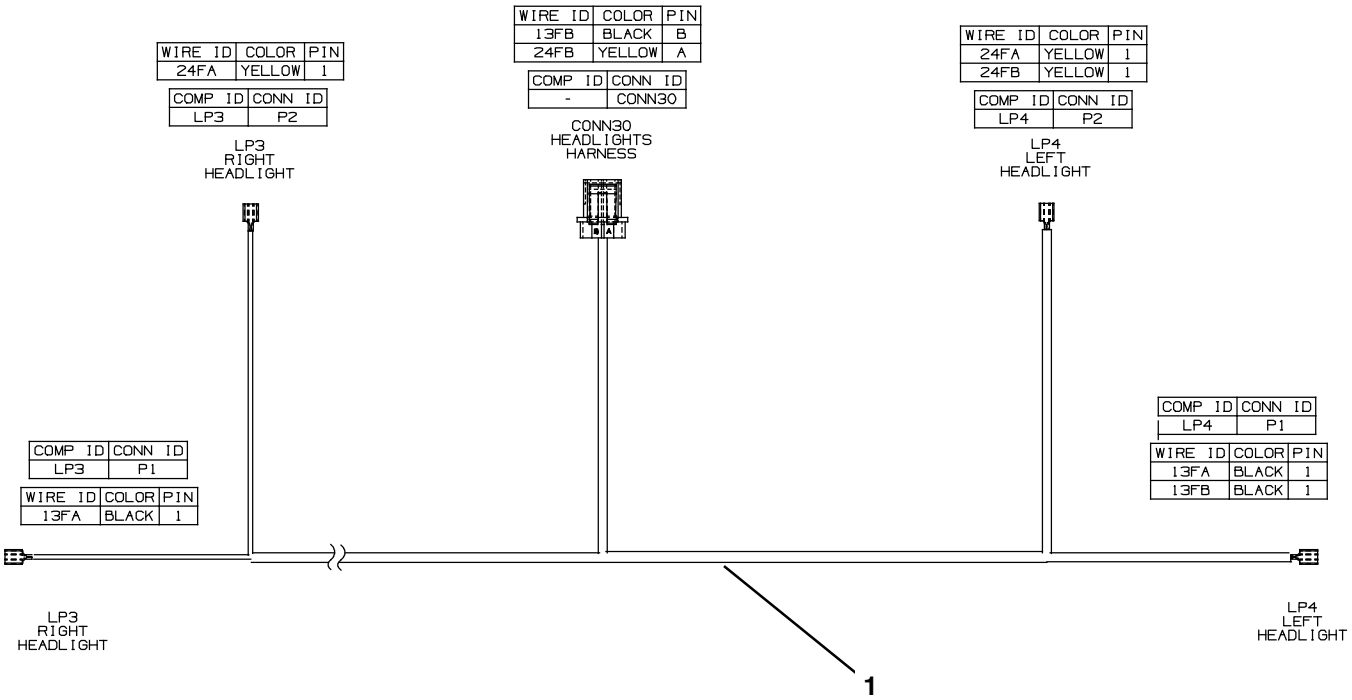

354716

Ref.	Part No.	Serial Number	Description	Qty.
1	1024141	(000000-)	Harness, Headlight	1

Fig. 88 - Electrical Wire Harness Group, Hopper

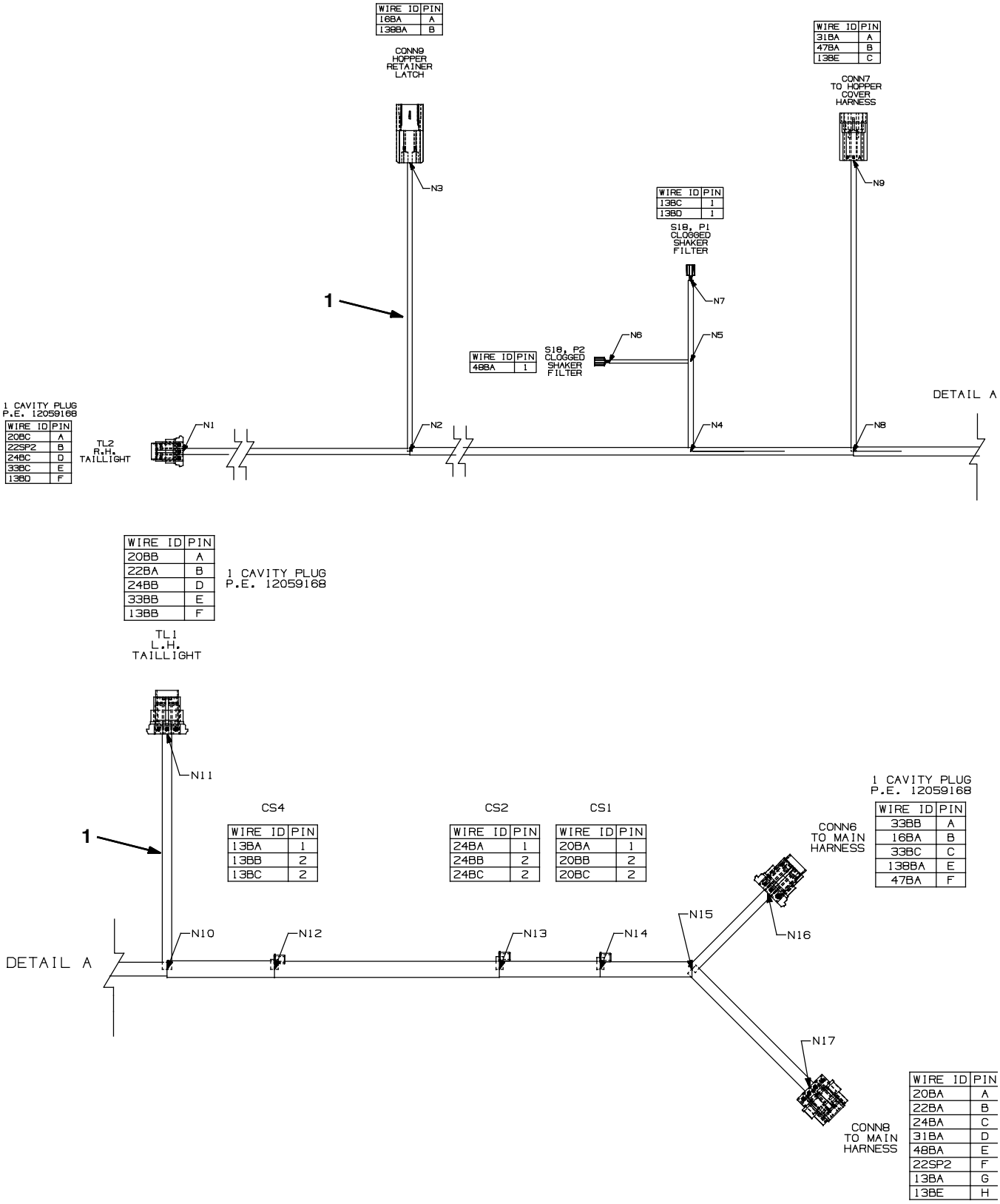

WIRE ID	PIN
16BA	A
138BA	B

WIRE ID	PIN
31BA	A
47BA	B
13BE	C

WIRE ID	PIN
13BC	1
13BD	1

WIRE ID	PIN
48BA	1

WIRE ID	PIN
20BC	A
22SP2	B
24BC	D
33BC	E
13BD	F

WIRE ID	PIN
20BB	A
22BA	B
24BB	D
33BB	E
13BB	F

WIRE ID	PIN
13BA	1
13BB	2
13BC	2

WIRE ID	PIN
24BA	1
24BB	2
24BC	2

WIRE ID	PIN
20BA	1
20BB	2
20BC	2

WIRE ID	PIN
33BB	A
16BA	B
33BC	C
138BA	E
47BA	F

WIRE ID	PIN
20BA	A
22BA	B
24BA	C
31BA	D
48BA	E
22SP2	F
13BA	G
13BE	H

Fig. 88 - Electrical Wire Harness Group, Hopper

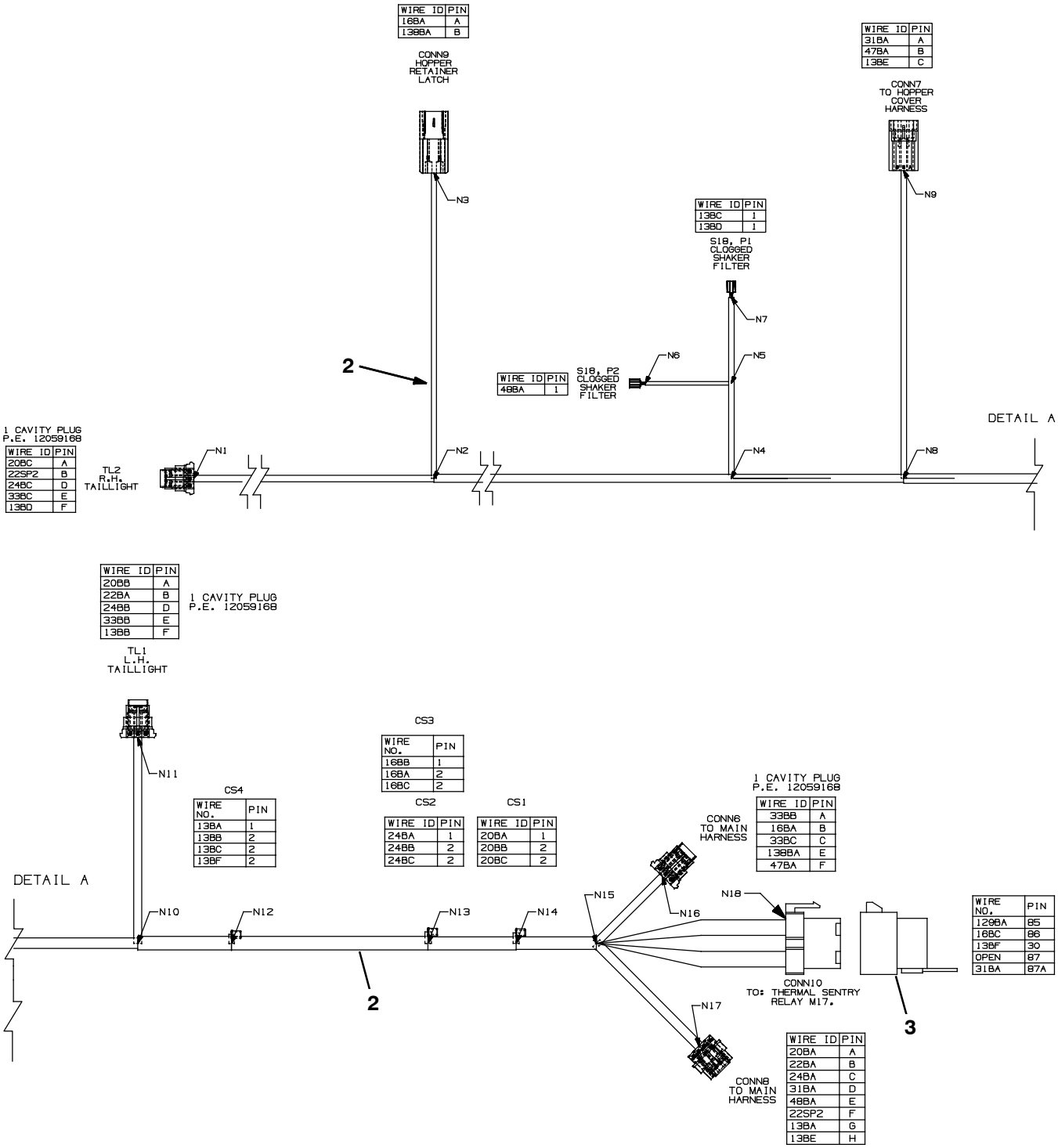

356253 - M20, M30

Ref.	Part No.	Serial Number	Description	Qty.
1	1033624	(000000- 001544)	Harness, Hppr [M20/M30]	1
2	1064371	(001545-)	Harness, Hppr [M20/M30]	1
3	56186	(001545-)	Relay, 12vdc, 040a, Spdt No	1

Fig. 89 - Electrical Wire Harness Group, Hopper Cover

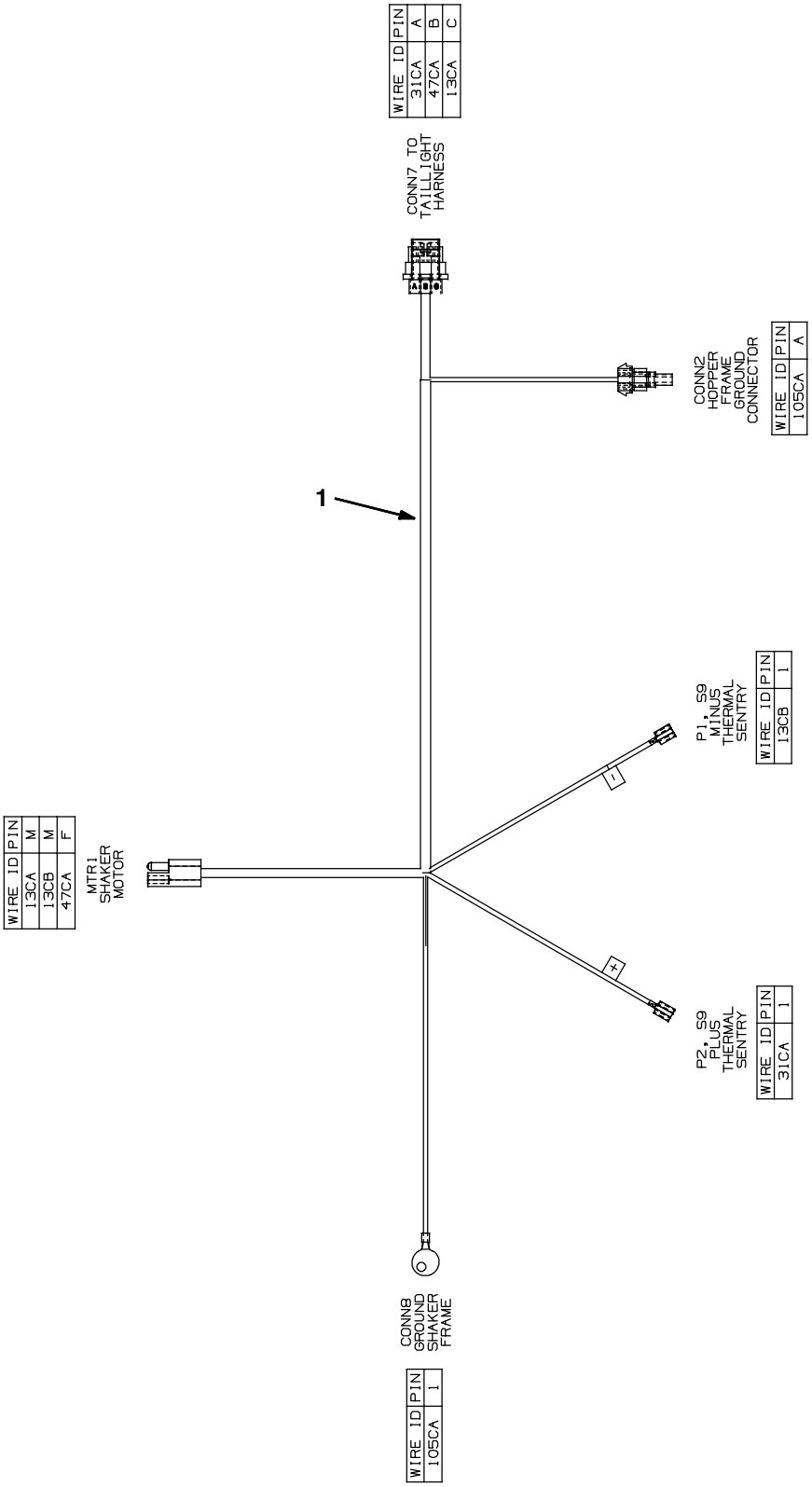

Fig. 89 - Electrical Wire Harness Group, Hopper Cover

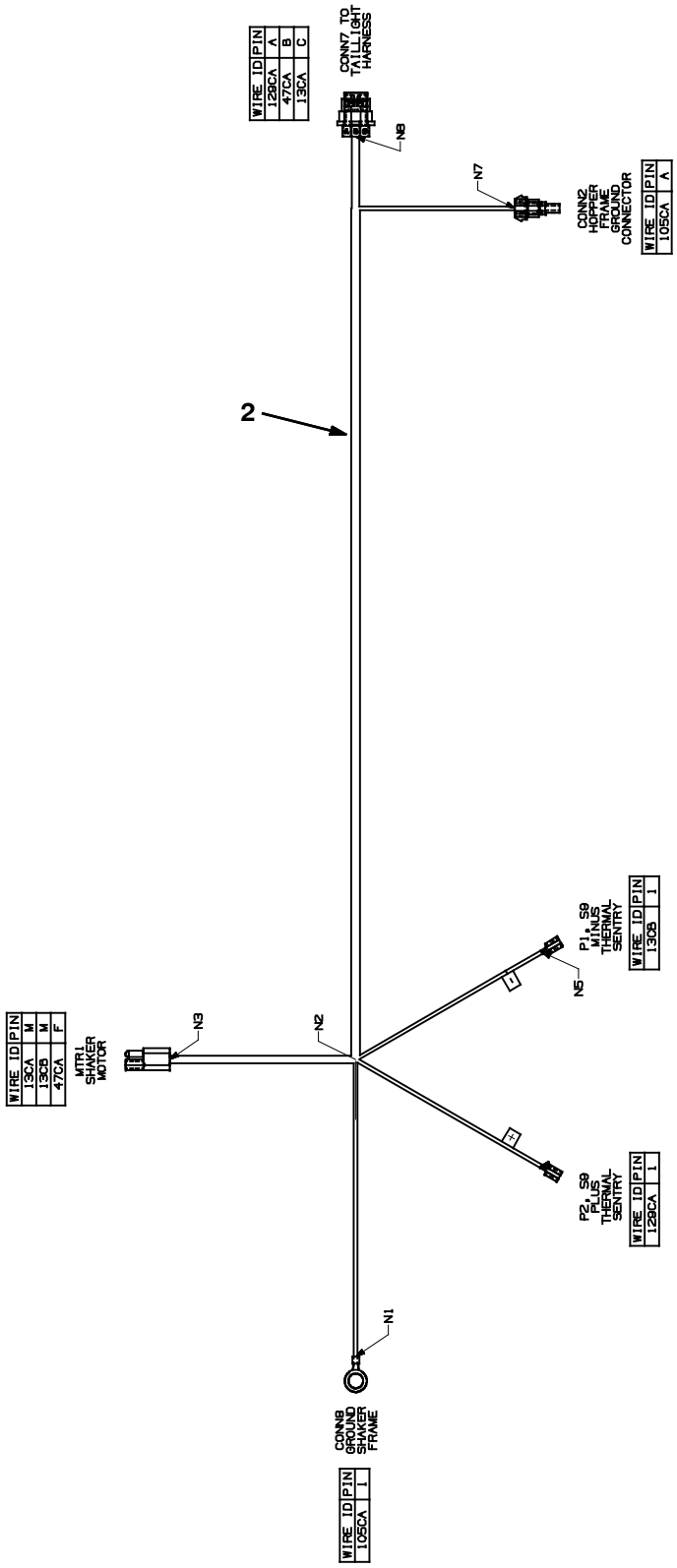

354389- 354459

Ref.	Part No.	Serial Number	Description	Qty.
1	1019950	(000000- 001544)	Harness, Hppr, Cover [M20]	1
2	1064370	(001545-)	Harness, Hppr, Cover [M20]	1

Fig. 90 - Electrical Wire Harnesses Group, Gasoline/LPG Engine

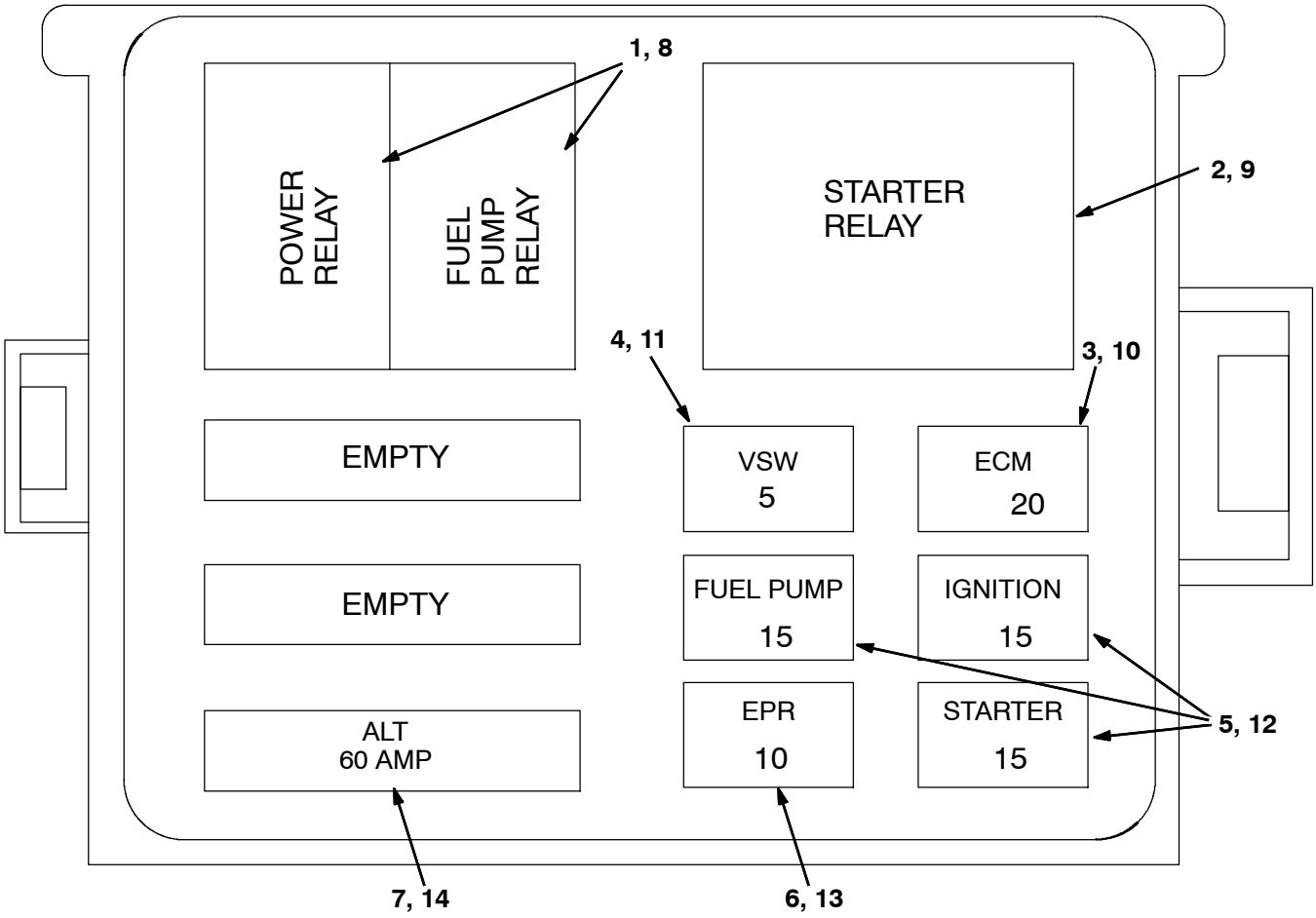

354716

Fig. 90 - Electrical Wire Harnesses Group, Gasoline/LPG Engine

	Ref.	Part No.	Serial Number	Description	Qty.
▽		384997	(000000- 001320)	Harness, Wire, Eng, Gas [Gm 1.6l]	1
▲	1	394916	(000000- 001320)	Relay, 12vdc, 020a, Spdt [Mini]	1
▲	2	57804	(000000- 001320)	Relay, 12vdc, 040a, Spdt No	1
▲	3	372237	(000000- 001320)	Fuse, 20a [Min- 20]	1
▲	4	372235	(000000- 001320)	Fuse, 05a [Min- 5]	1
▲	5	372236	(000000- 001320)	Fuse, 15a [Min- 15]	3
▲	6	384999	(000000- 001320)	Fuse, 10a	1
▲	7	384998	(000000- 001320)	Fuse, 60a	1
▽		1063457	(001321- 003999	Harness, Wire, Eng, Gas [GM 1.6L 10]	1
▲	1	394916	(001321- 003999)	Relay, 12vdc, 020a, Spdt [Mini]	1
▲	2	57804	(001321- 003999)	Relay, 12vdc, 040a, Spdt No	1
▲	3	372237	(001321- 003999)	Fuse, 20a [Min- 20]	1
▲	4	372235	(001321- 003999)	Fuse, 05a [Min- 5]	1
▲	5	372236	(001321- 003999)	Fuse, 15a [Min- 15]	3
▲	6	384999	(001321- 003999)	Fuse, 10a	1
▲	7	384998	(001321- 003999)	Fuse, 60a	1
▽		384990	(000000- 001320	Harness, Wire, Eng, Lpg [Gm 1.6l]	1
▲	8	394916	(000000- 001320)	Relay, 12vdc, 020a, Spdt [Mini]	1
▲	9	57804	(000000- 001320)	Relay, 12vdc, 040a, Spdt No	1
▲	10	372237	(000000- 001320)	Fuse, 20a [Min- 20]	1
▲	11	372235	(000000- 001320)	Fuse, 05a [Min- 5]	1
▲	12	372236	(000000- 001320)	Fuse, 15a [Min- 15]	1
▲	13	384999	(000000- 001320)	Fuse, 10a	3
▲	14	384998	(000000- 001320)	Fuse, 60a	1
▽		1063456	(001321- 003999	Harness, Wire, Eng, Lpg [GM 1.6L 10]	1
▲	8	394916	(001321- 003999)	Relay, 12vdc, 020a, Spdt [Mini]	1
▲	9	57804	(001321- 003999)	Relay, 12vdc, 040a, Spdt No	1
▲	10	372237	(001321- 003999)	Fuse, 20a [Min- 20]	1
▲	11	372235	(001321- 003999)	Fuse, 05a [Min- 5]	1
▲	12	372236	(001321- 003999)	Fuse, 15a [Min- 15]	1
▲	13	384999	(001321- 003999)	Fuse, 10a	3
▲	14	384998	(001321- 003999)	Fuse, 60a	1
		1071653	(004000-)	Harness, Wire, Eng, Gas [Mit, 2.0L]	1
		1071654	(004000-)	Harness, Wire, Eng, Lpg [Mit, 2.0L]	1

Fig. 91 - Label Group

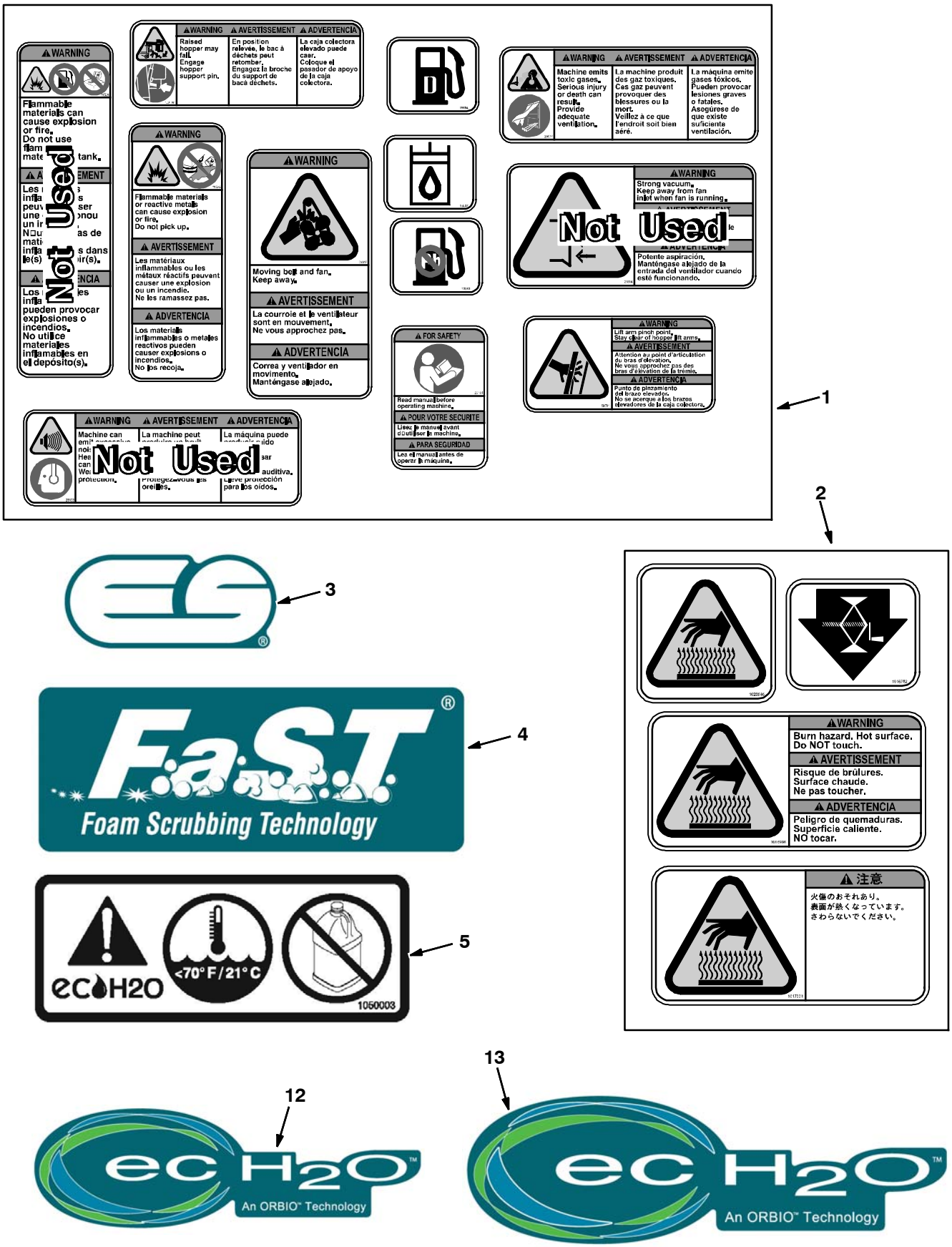

Fig. 91 - Label Group

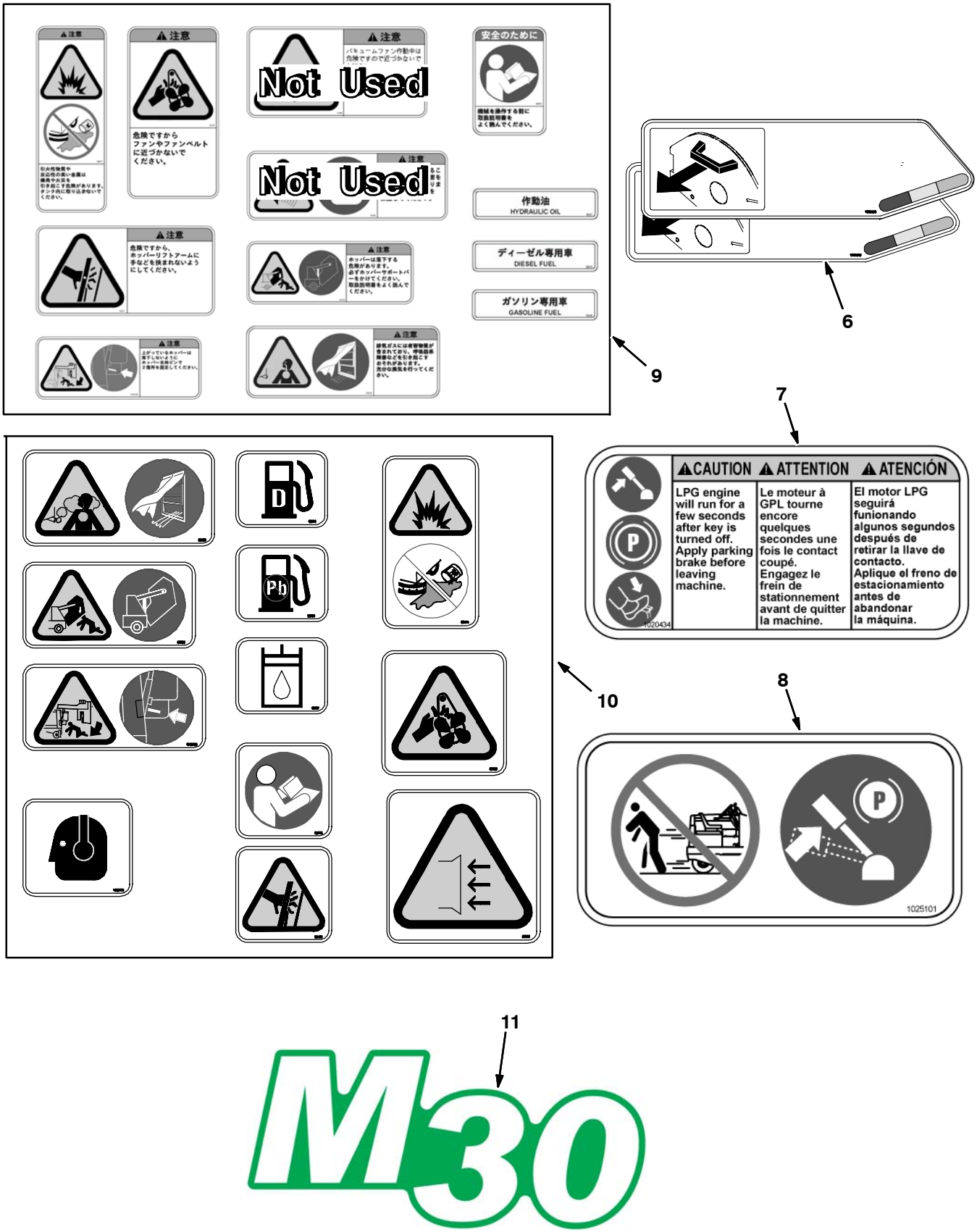

Fig. 91 - Label Group

Ref.	Part No.	Serial Number	Description	Qty.
1	77221	(000000-)	Label Set, Info/Hzrd, Swpr / Scrbr	1
2	1017141	(000000-)	Label Set, Hi Temp	1
3	1065343	(000000-)	Label, Logo, 05.75L 2Color [ES]	3
4	1065342	(000000-)	Label, Logo, 07.95L 2Color [FaST]	3
5	1050003	(000000-)	Label [User, Attention, ec- H2O]	2
6	1031017	(000000-)	Label Set, Brush Indicator & Removal	1
7	1020434	(000000-)	Label, Caution [Apply Parking Brake]	1
8	1025101	(000000-)	Label, Caution [Apply Parking Brake] (CE & Japan Only)	1
9	1032450	(000000-)	Label Set, Info/Hzrd, Swpr / Scrbr, Tj (Japan Only)	1
10	1032418	(000000-)	Label Set, Info/Hzrd, Swpr / Scrbr (CE Only)	1
11	1064663	(000000-)	Label, Model, 2Color [M30]	1
12	1062813	(000000-)	Label, Logo, 12.3L 4Color [ec- H2O]	1
13	1064440	(000000-)	Label, Logo, 16.9L 4Color [ec- H2O]	1
	374224	(0000-)	Tape, Warning, Rh, Blk/Yel [33Mtr] (CE Only)	1
	C460919	(0000-)	Tape, Warning, Left, Blk/Yel [33Mtr] (CE Only)	1

SECTION 3

Contents **Page**

Fig. 1 - ES Pump Group 3-2
Fig. 2 - ES Tanks Group 3-4
Fig. 3 - Side Brush Motor Group (000000- 001278) 3-6
Fig. 4 - Side Brush Motor Group (001279-) 3-8
Fig. 5 - Side Brush Lift Group 3-10
Fig. 6 - Side Brush Solution Control Group . . . 3-12
Fig. 7 - Side Brush Hydraulic Valve Group 3-14
Fig. 8 - Side Brush Hydraulic Hose Group 3-16
Fig. 9 - FaST Pumps and Detergent Group . . . 3-18
Fig. 10 - FaST Solution Supply Group 3-20
Fig. 11 - FaST Solution Supply Group, Side Brush 3-22
Fig. 12 - FaST Wire Harness Group 3-24
Fig. 13 - ec- H20 Solution Pump Group 3-26
Fig. 14 - ec- H20 Solution Pump Supply Group . 3-28
Fig. 15 - ec- H20 Solution Supply Group 3-30
Fig. 16 - ec- H20 Solution Supply Group with Side Brush 3-32
Fig. 17 - ec- H20 Wire Harnesses Group 3-34
Fig. 18 - Backup Alarm Kit 3-37
Fig. 19 - Light Kit, Flashing 3-38
Fig. 20 - Light Kit, Strobe 3-40
Fig. 21 - Light Kit, Flashing Overhead Guard . . 3-42
Fig. 22 - Light Kit, Strobe Overhead Guard 3-43
Fig. 23 - Overhead Guard Kit 3-44
Fig. 24 - Telemetry Group 3-46
Fig. 25 - Vacuum Wand Kit 3-48
Fig. 26 - Spray Nozzle Kit 3-50
Fig. 27 - Pressure Washer Mount Group 3-52
Fig. 28 - Pressure Washer Solution Group 3-54
Fig. 29 - Pressure Washer Hydraulic Hoses Group (000000- 003999) 3-56
Fig. 30 - Pressure Washer Hydraulic Hoses Group (004000-) 3-58
Fig. 31 - Transport Kit 3-60
Fig. 32 - Squeegee Guard Kit 3-62
Fig. 33 - Engine Radiator Screen Kit (001250- 003999) 3-64
Fig. 34 - Fire Extinguisher Kit 3-66
Fig. 35 - Documentation Group 3-67

Fig. 1 - ES Pump Group

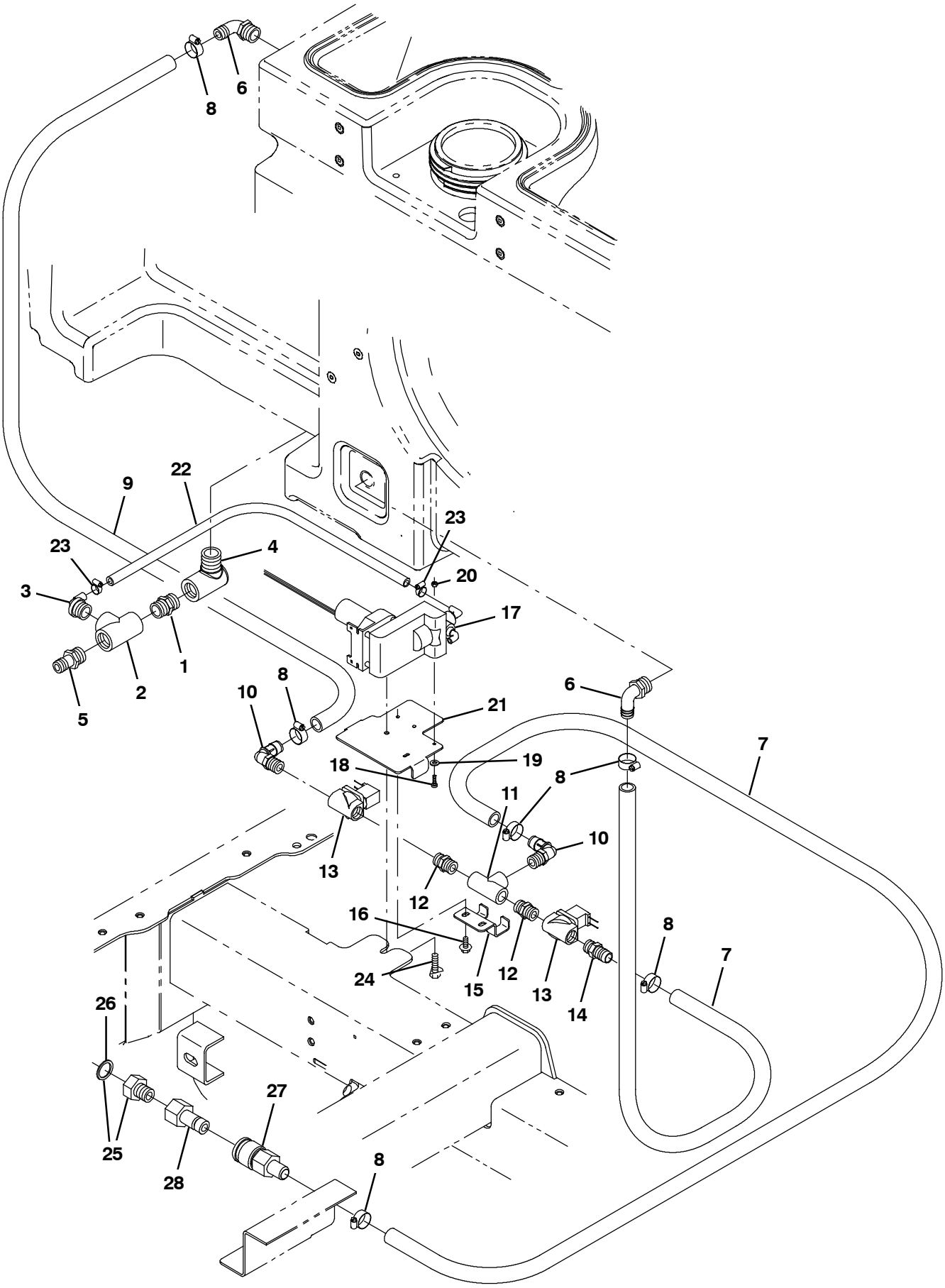

354652

Fig. 1 - ES Pump Group

	Ref.	Part No.	Serial Number	Description	Qty.
	1	24544	(000000-)	Fitting, Plstc, Str, Pm12/Pm12 1.60l	1
	2	42133A	(000000-)	Fitting, Plstc, Tee, Pf12/Pf12/Pf12	1
	3	79484	(000000-)	Fitting, Plstc, E90, Bm06/Pm12, Nyl	1
	4	69785	(000000-)	Fitting, Plstc, E90, Pf12/Pm12	1
	5	79273-2	(000000-004690)	Fitting, Plstc, Str, Bm12/Pm12	1
	5	365095	(004691-)	Fitting, Plstc, Str, Bm10/Pm12	1
	6	14877	(000000-)	Fitting, Plstc, E90, Bm12/Pm12	2
	7	1006410	(000000-)	Hose, Afmkt, Pvc, Brd, 0.75id, 03ft, Clr	2
	8	63810	(000000-)	Clamp, Hose, Wormdrive, 0.56-1.06d, .56w	6
	9	1015045	(000000-)	Hose, Afmkt, Pvc, Brd, 0.75id, 08ft, Clr	1
	10	63244-2	(000000-)	Fitting, Plstc, E90, Bm12/Pm08	2
	11	79497	(000000-)	Fitting, Plstc, Tee, Pf08/Pf08/Pf08	1
	12	86508	(000000-)	Fitting, Plstc, Str, Pm08/Pm08	2
	13	73433	(000000-)	Valve, Water, Solenoid, 12vdc Pf08/Pf08	2
	14	78398	(000000-)	Fitting, Plstc, Str, Bm12/Pm08, Nyl	1
	15	1016837	(000000-)	Bracket, Mtg, Valve	1
	16	222158	(000000-)	Screw, Hex, M6 X 1.00 X 10, Fmg	2
	17	73260	(000000-)	Pump, Detgt, 14vdc, 150ml/Min 20psi	1
	18	24265	(000000-)	Screw, Pan, Phl, M4 X 0.70 X 16, Ss	2
	19	01683	(000000-)	Washer, Flat, 10, Ss	2
	20	33932	(000000-)	Nut, Hex, Lock, M4 X 0.70, Nl, Ss	2
	21	1033792	(000000-)	Plate, Hsng [FaST]	1
	22	1006400	(000000-)	Hose, Afmkt, Pvc, Clr, 0.38id, 03ft	1
	23	43844	(000000-)	Clamp, Hose, Wormdrive, 0.25-0.62d, .31w	2
	24	76099	(000000-)	Screw, Hex, M8 X 1.25 X 25, Fmg	1
▽	25	375322	(000000-)	Fitting Kit, Hose, Garden	1
▲	26	01316	(000000-)	Washer, Flat, 0.66b 1.00d .12, Rbr	1
	27	24105	(000000-)	Fitting, Brs, Qdc, Bm12/Qf08	1
	28	33295	(000000-)	Fitting, Brs, Qdc, Pf08 [Parker Bh3f]	1

Fig. 2 - ES Tanks Group

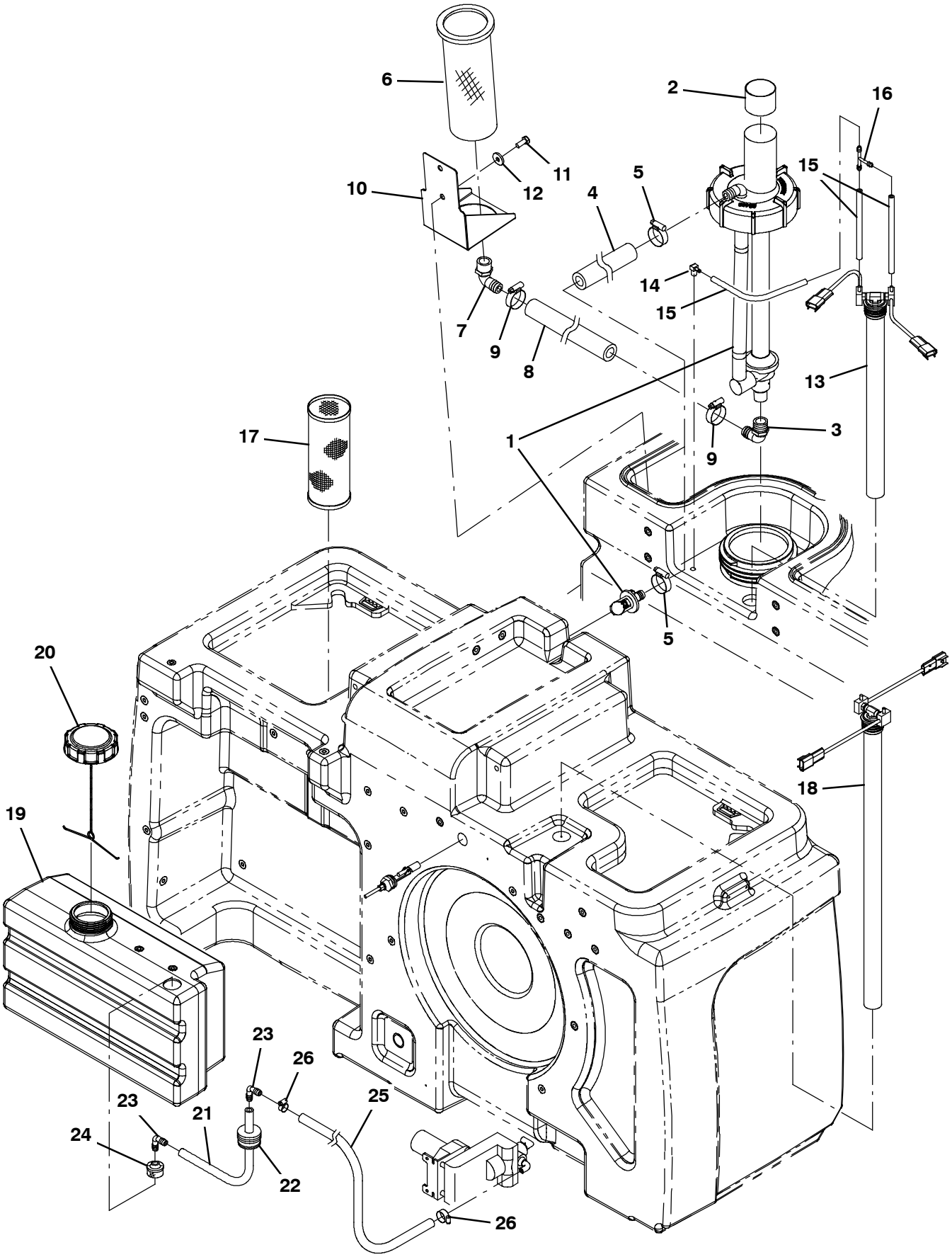

354653

Fig. 2 - ES Tanks Group

Ref.	Part No.	Serial Number	Description	Qty.
1	1021210	(000000-)	Pump Assy, Column, Es (See Breakdowns)	1
2	1028697	(000000-)	Sleeve, Rbr, 3.50b 3.58d 1.8l	1
3	14877	(000000-)	Fitting, Plstc, E90, Bm12/Pm12	1
4	1015033	(000000-)	Hose, Afmkt, Pvc, Brd 0.62id 01ft	1
5	63810	(000000-)	Clamp, Hose, Wormdrive, 0.56- 1.06d, .56w	2
6	386652	(000000-)	Strainer, Soltn, 20mesh, Cyl, 3.5d 09.5l	1
7	24543	(000000-)	Fitting, Plstc, E90, Bm12/Pf12	1
8	1015048	(000000-)	Hose, Afmkt, Pvc, Brd, 0.75id, 01ft, Clr	1
9	11399	(000000-)	Clamp, Hose, Wormdrive, 0.81- 1.50d, .50w	2
10	1019636	(000000-)	Bracket, Mtg, Strainer	1
11	09740	(000000-)	Screw, Hex, M8 X 1.25 X 20, Ss	2
12	1017218	(000000-)	Washer, Flat, 0.32b 1.00d .12, Ss	1
13	1072882	(000000-)	Switch Assy, Press, Dbl, 17.5l	1
14	32183	(000000-)	Fitting, Brs, E90, Bm03/Pm02	1
15	1031572	(000000-)	Hose, Afmkt, Vacuum, 0.16id, 01ft	3
16	59886	(000000-)	Fitting, Plstc, Tee, Bm03/Bm03/Bm03	1
17	1039019	(000000-)	Filter, Soltn, 020mesh, Pm12 3.2d 08.0l	1
18	1072883	(000000-)	Switch Assy, Press, Dbl, 26.2l	1
19	1022229	(000000-)	Tank, Detgt, Trimmed	1
20	1011885	(000000-)	Cap, Tank	1
21	1006400	(000000-)	Hose, Afmkt, Pvc, Brd, 0.38id, 03ft, Clr	1
22	20944	(000000-)	Grommet, Pye, 0.37id, F/1.5h, .13 Matl	1
23	20951	(000000-)	Fitting, Plstc, E90, Bm06/Bm06	2
24	20952	(000000-)	Screen, Pump	1
25	1014930	(000000-)	Hose, Afmkt, Pvc, Clr, 0.38id, 08ft	1
26	43844	(000000-)	Clamp, Hose, Wormdrive, 0.25- 0.62d, .31w	2

Fig. 3 - Side Brush Motor Group (000000-001278)

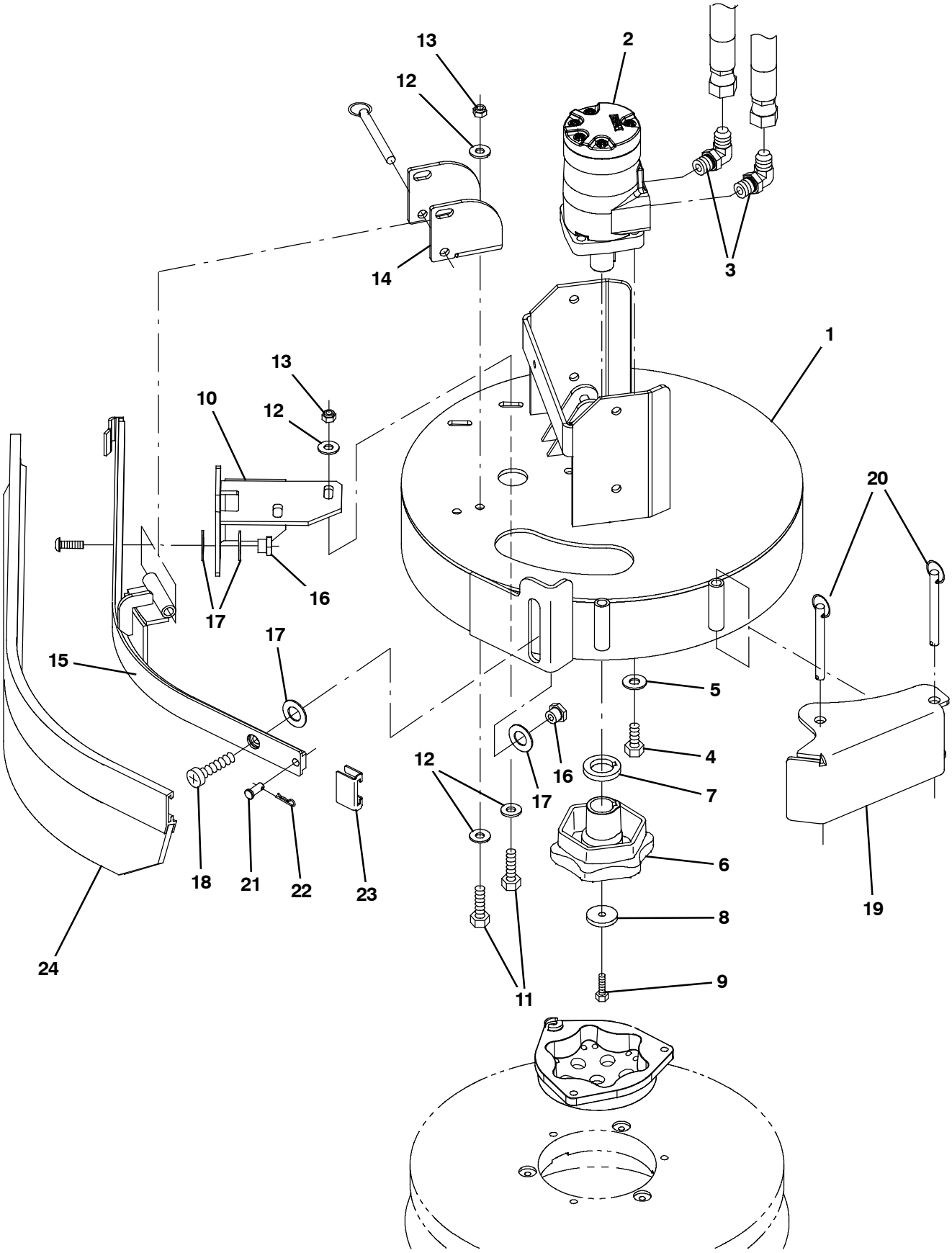

354654

Fig. 3 - Side Brush Motor Group (000000-001278)

Ref.	Part No.	Serial Number	Description	Qty.
1	1021794	(000000-001278)	Bracket Wldt, Mtg, Side Brush	1
2	1029379	(000000-001278)	Motor, Hyd, Gear, Int 08.9 Bi-Dir 2500 (See Breakdowns)	1
3	56821	(000000-001278)	Fitting, Hyd, E90, Jm08/Om10	2
4	01762	(000000-001278)	Screw, Hex, .38-16 X 0.75, Nl	4
5	32492	(000000-001278)	Washer, Flat, 0.38, Std	4
6	377359	(000000-001278)	Hub, Drive, Brush, Disk, 1.00b [6t]	1
7	25611	(000000-001278)	Spacer, Hub, Keyed	1
8	19191	(000000-001278)	Spacer	1
9	25046	(000000-001278)	Screw, Hex, .25-20 X 1.00, G5	1
10	1022135	(000000-001278)	Bracket, Mtg, Sqge	1
11	09010	(000000-001278)	Screw, Hex, M8 X 1.25 X 25, Ss	4
12	01685	(000000-001278)	Washer, Flat, 0.38b 0.88d .08, Ss	8
13	08713	(000000-001278)	Nut, Hex, Lock, M8 X 1.25, Nl, Ss	4
14	1022188	(000000-001278)	Bar, Retainer	1
15	1022111	(000000-001278)	Frame Wldt, Sqge, Side Brush	1
16	1022302	(000000-001278)	Nut, T, M8 X 1.25 X 14.50od X 9.5l	2
17	64425	(000000-001278)	Washer, Thrust, 0.61b 1.25d .06, Fgl	4
18	223470	(000000-001278)	Screw, Btn, M8 X 1.25 X 25, Ss	2
19	1022260	(000000-001278)	Bumper Wldt, Brush, Side	1
20	369359	(000000-001278)	Pin, Hitch, .375d X 3.12l, Pl	3
21	46800	(000000-001278)	Pin, Clevis, 0.31d X 0.75l	1
22	08179	(000000-001278)	Pin, Cotter, .094 X 1.00	1
23	86759	(000000-001278)	Retainer, Sqge	1
24	1025005	(000000-001278)	Squeegee Assy, Sba, Linatex	1
24	1027716	(000000-001278)	Squeegee Assy, Sba, Ure	1

Fig. 4 - Side Brush Motor Group (001279-)

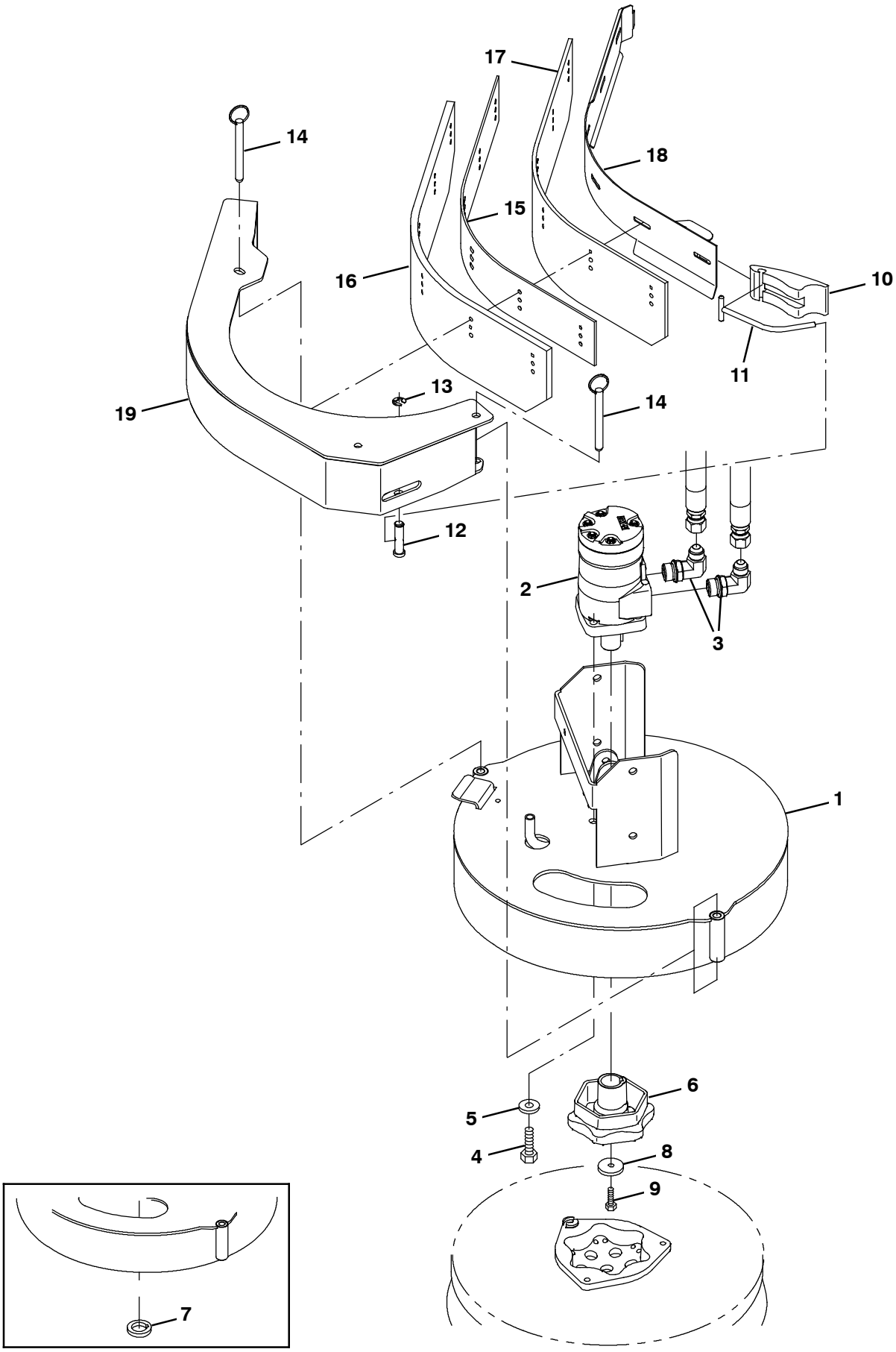

354463

Fig. 4 - Side Brush Motor Group (001279-)

	Ref.	Part No.	Serial Number	Description	Qty.
	1	1047002	(001279-)	Bracket Wldt, Mtg, Side Brush Fixed	1
	2	1029379	(001279- 001966)	Motor, Hyd, Gear, Int 08.9 Bi- Dir 2500 (See Breakdowns)	1
▽	2	1068812	(001967-)	Motor, Hyd, Gear, Int 08.9 Bi- Dir 2500	1
▲		22615	(001967-)	Seal Kit, Motor [Cl]	1
	3	56821	(001279-)	Fitting, Hyd, E90, Jm08/Om10	2
	4	01762	(001279-)	Screw, Hex, .38- 16 X 0.75, Nl	4
	5	32492	(001279-)	Washer, Flat, 0.38 Std	4
	6	1042968	(001279-)	Hub, Drive, Brush, Disk, 1.00b [6t]	1
	7	25611	(001279- 001966)	Spacer, Hub, Keyed	1
	8	19191	(001279-)	Spacer	1
	9	25046	(001279-)	Screw, Hex, .25- 20 X 1.00, 5	1
	10	21601	(001279-)	Cam, Front	1
	11	386298	(001279-)	Pin Wldt, Front	1
	12	21603	(001279-)	Pin, Grvd, 0.43d 01.8l [303ss]	1
	13	24555	(001279-)	Ring, Retaining, Ext, 0.38d, [E- Ring]	1
	14	369359	(001279-)	Pin, Hitch, .375d X 3.12l, Pl	2
	15	1046995	(001279- 004481)	Spacer, Sqge, Side Brush, Rbr	1
	15	1073414	(004482-)	Spacer, Sqge, Side Brush, Rbr	1
	16	1046980	(001279- 004481)	Blade, Sqge, Side Brush, Linatex	1
	16	1073412	(004482-)	Blade, Sqge, Side Brush, Linatex	1
	16	1059091	(001279- 004481)	Blade, Sqge, Side Brush, Urethane	1
	16	1073413	(004482-)	Blade, Sqge, Side Brush, Urethane	1
	17	1047238	(001279- 004481)	Blade, Sqge, Side Brush, Linatex	1
	17	1073415	(004482-)	Blade, Sqge, Side Brush, Linatex	1
	17	1059092	(001279- 004481)	Blade, Sqge, Side Brush, Urethane	1
	17	1073416	(004482-)	Blade, Sqge, Side Brush, Urethane	1
	18	1047060	(001279- 004481)	Plate Wldt, Retainer, Sqge	1
	18	1073411	(004482-)	Plate Wldt, Retainer, Sqge	1
	19	1046976	(001279- 004481)	Bumper Wldt, Brush, Side	1
	19	1073409	(004482-)	Bumper Wldt, Brush, Side	1

Fig. 5 - Side Brush Lift Group

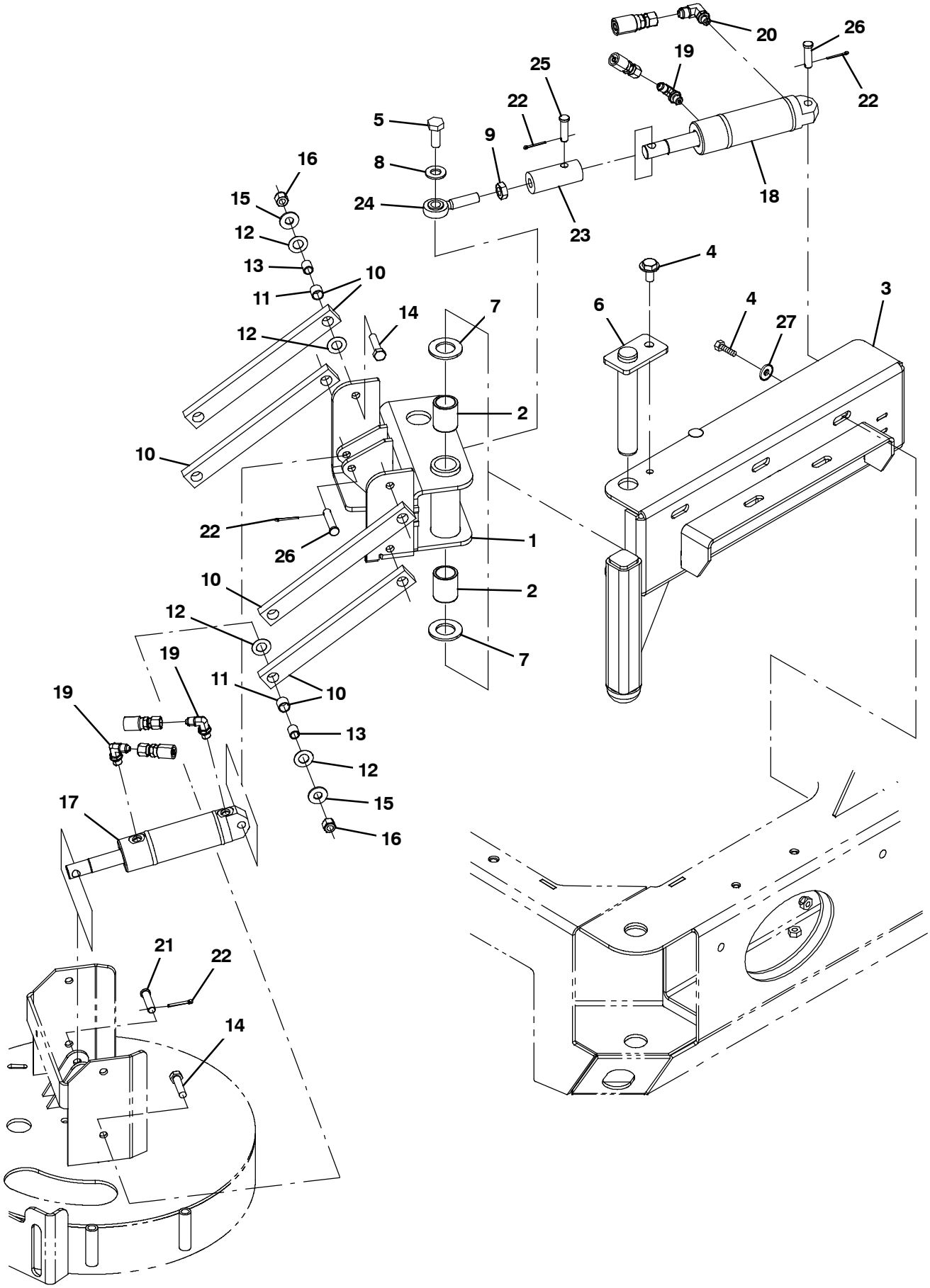

354655

Fig. 5 - Side Brush Lift Group

	Ref.	Part No.	Serial Number	Description	Qty.
	1	1021439	(000000-)	Pivot Wldt, Brush, Side	1
	2	71868	(000000-)	Bushing, Sleeve, 1.00b 1.13d 1.50l, Fgl	2
	3	1021473	(000000-)	Channel Wldt, Pivot	1
	4	09010	(000000-)	Screw, Hex, M8 X 1.25 X 25, Ss	6
	5	41346	(000000-)	Screw, Hex, M12 X 1.75 X 30, 8.8	1
	6	1021617	(000000-)	Pin Wldt	1
	7	71869	(000000-)	Washer, Thrust, 1.00b 1.75d 0.13, Fbr	2
	8	32486	(000000-)	Washer, Flat, 0.50, Sae	1
	9	48985	(000000-)	Nut, Hex, Jam, .50- 20	1
▽	10	63175- 1	(000000-)	Arm, Link	4
▲	11	63233	(000000-)	Bushing, Sleeve, 0.50b 0.59d 0.50l, Bnz	2
	12	59633	(000000-)	Bearing, Thrust, 0.53b 1.00d 0.03w	16
	13	1027926	(000000-)	Sleeve, P/M, 0.37b 0.50d 0.6l [430ss]	8
	14	36845	(000000-)	Screw, Hex, .38- 16 X 1.50, Ss	8
	15	01685	(000000-)	Washer, Flat, 0.38b 0.88d .08, Ss	8
	16	59156	(000000-)	Nut, Hex, Lock, .38- 16, Nl, Ss	8
	17	1038137	(000000-)	Cylinder, Hyd, 1.5b 07.8l 02.80strk 2500	1
	18	1038115	(000000-)	Cylinder, Hyd, 1.5b 07.8l 02.75strk 2500	1
	19	77097	(000000-)	Fitting, Hyd, E90, Jm04/Om04	3
	20	77098	(000000-)	Fitting, Hyd, E90, Jm06/Om04	1
	21	29558	(000000-)	Pin, Clevis, 0.37d X 1.50l	1
	22	08179	(000000-)	Pin, Cotter, .094 X 1.00	4
	23	1021564	(000000-)	Adapter, Rod- End, Side Brush	1
	24	71874	(000000-)	Rod- End, 0.50- 20rh Mal 0.50b	1
	25	29557	(000000-)	Pin, Clevis, 0.37d X 1.31l	1
	26	17461	(000000-)	Pin, Clevis, 0.37d X 1.75l	2
	27	32491	(000000-)	Washer, Flat, 0.31, Std	2

Fig. 6 - Side Brush Solution Control Group

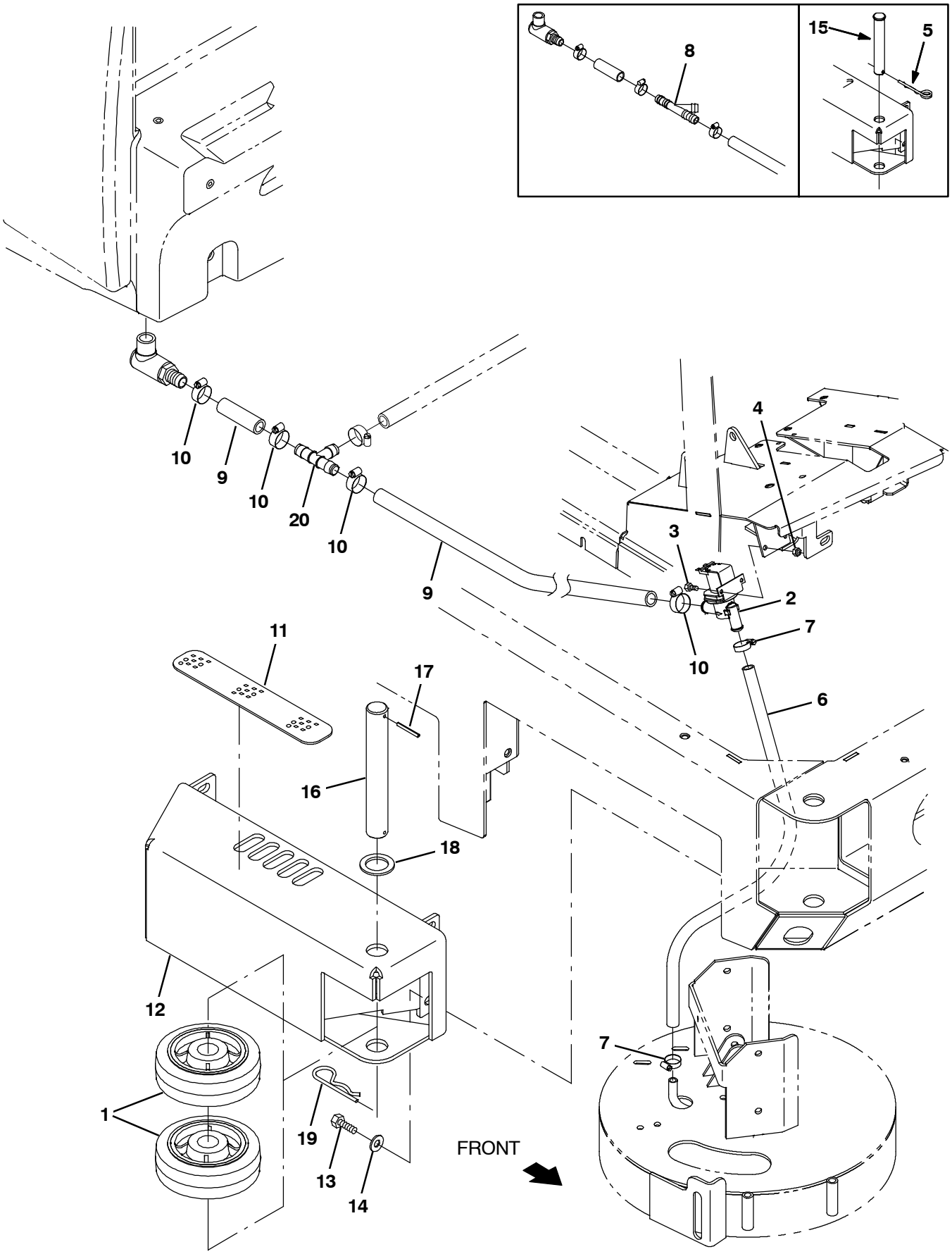

354656

Fig. 6 - Side Brush Solution Control Group

Ref.	Part No.	Serial Number	Description	Qty.
1	1060130	(000000-)	Wheel, 06.0d 2.00w 1.19b, Gray Rbr	2
2	1022106	(000000-)	Valve Assy, Water, Solenoid, 12vdc	1
3	09738	(000000-)	Screw, Hex, M5 X 0.80 X 12, Ss	2
4	09739	(000000-)	Nut, Hex, Lock, M5 X 0.80, Nl, Ss	2
5	761490	(000000- 001248)	Pin, Cotter, Hair, Dbl	1
6	50178	(000000-)	Hose, Pvc, Clr, 0.50id 0.69od 026.0l	1
7	54333	(000000-)	Clamp, Hose, Wormdrive, 0.31- 0.88d, .31w	2
8	393255	(000000- 004690)	Fitting, Plstc, Tee, Bm12/Bm12/Bm12	1
9	1015045	(000000- 004690)	Hose, Afmkt, Pvc, Brd, 0.75id, 08ft, Clr	1
9	1015032	(004691-)	Hose, Afmkt, Pvc, Brd, 0.62id, 08ft, Clr	1
10	63810	(000000-)	Clamp, Hose, Wormdrive, 0.56- 1.06d, .56w	4
11	82839	(000000-)	Tread, Non- Skid, 02.2w 11.5l	1
12	1022318	(000000-)	Guard Wldt, Brush, Side	1
13	12317	(000000-)	Screw, Hex, M10 X 1.50 X 30, Ss	4
14	01686	(000000-)	Washer, Flat, 0.44b 1.00d .08, Ss	4
15	9006334	(000000- 001248)	Pin Kit, Wheel, Ci [M20/T20/M30]	1
16	1053838	(001249-)	Pin, 30mmd X 215mml	1
17	23146	(001249-)	Pin, Roll, .187d X 1.62l, .187/.192	1
18	47719	(001249-)	Washer, Flat, 1.26b 1.88d .13, Stl	1
19	34411	(001249-)	Pin, Cotter, Hair, 1.00d .178 Wir	1
20	1062116	(004691-)	Fitting, Plstc, Tee, Bm10/Bm10/Bm10	1

Fig. 7 - Side Brush Hydraulic Valve Group

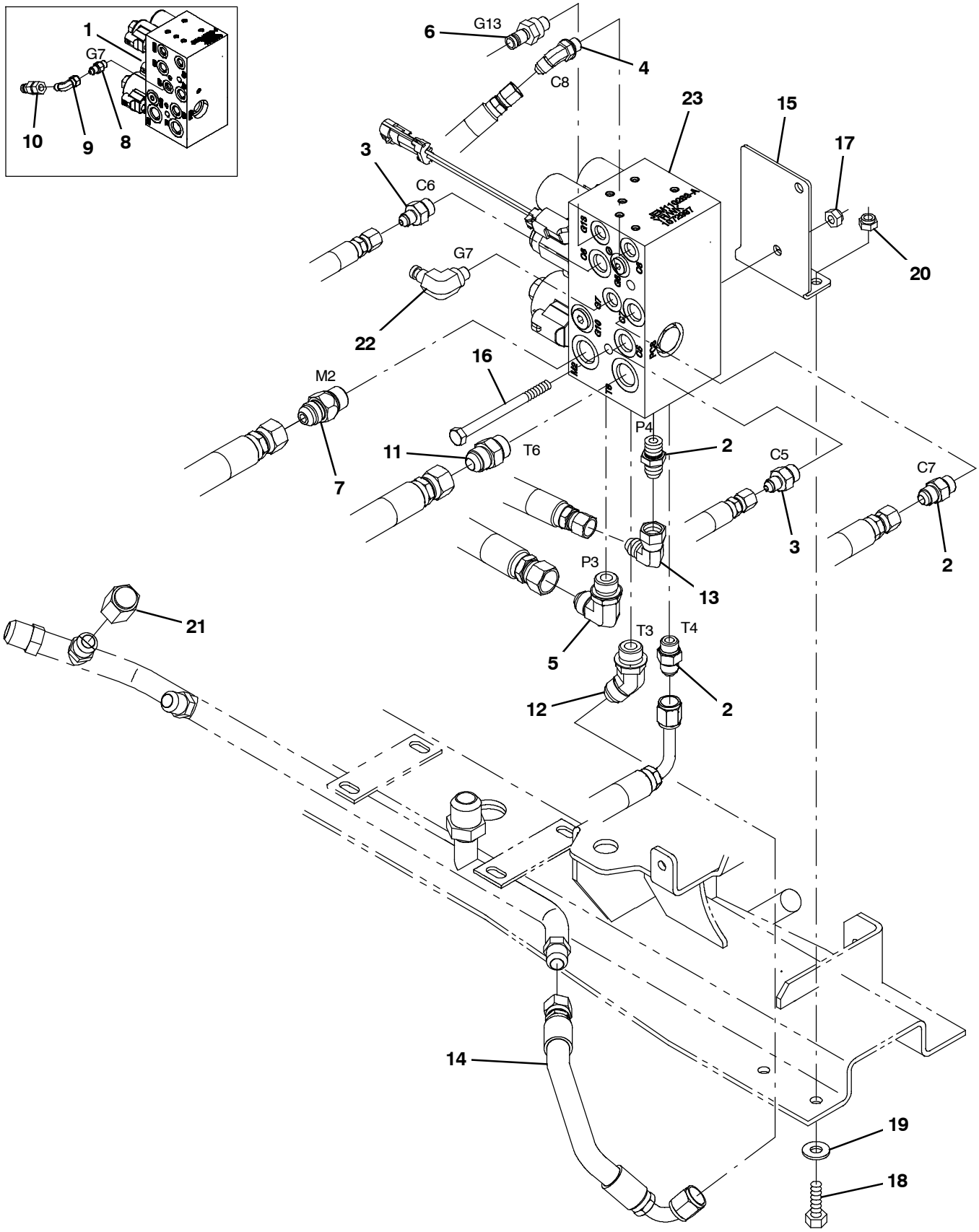

354657

Fig. 7 - Side Brush Hydraulic Valve Group

Ref.	Part No.	Serial Number	Description	Qty.
1	1037805	(000000- 004114)	Valve, Cntrl, Hyd, Solenoid, 03/16gpm (See Breakdowns)	1
2	56690	(000000-)	Fitting, Hyd, Str, Jm06/Om06	3
3	55685	(000000-)	Fitting, Hyd, Str, Jm04/Om06	2
4	34359	(000000-)	Fitting, Hyd, E45, Jm04/Om04	1
5	44868	(000000-)	Fitting, Hyd, E90, Jm08/Om08	1
6	395973	(000000-)	Fitting, Hyd, Str, Om04/Qm04	1
7	1026119	(000000-)	Valve, Hyd, Check, 5000psi Jm08/Om08	1
8	55586	(000000- 001181)	Fitting, Hyd, Str, Jm04/Om04	1
9	39210	(000000- 001181)	Fitting, Hyd, E90, Jf04/Jm04	1
10	396476	(000000- 001181)	Fitting, Hyd, Str, Jf04/Qm04	1
11	44869	(000000-)	Fitting, Hyd, Str, Jm08/Om08	1
12	42226	(000000-)	Fitting, Hyd, E45, Jm08/Om08	1
13	47504	(000000-)	Fitting, Hyd, E90, Jf06/Jm06	1
14	1037011	(000000-)	Hose, Hyd, Tc08, Jf08str/Jf08e90, 012.0	1
15	1045272	(000000-)	Bracket, Valve, Sba [M20 AND T20]	1
16	364441	(000000-)	Screw, Hex, M8 X 1.25 X 110, Ss	2
17	08709	(000000-)	Nut, Hex, Lock, M8 X 1.25, Nl	2
18	09010	(000000-)	Screw, Hex, M8 X 1.25 X 25, Ss	2
19	32491	(000000-)	Washer, Flat, 0.31, Std	2
20	08713	(000000-)	Nut, Hex, Lock, M8 X 1.25, Nl, Ss	2
21	60090	(000000-)	Fitting, Hyd, Cap, Jf08	1
22	395974	(001182-)	Fitting, Hyd, E90, Om04/Qm04	1
23	1072997	(004115-)	Valve, Cntrl, Hyd, Solenoid, 03/16gpm (See Breakdowns)	1

Fig. 8 - Side Brush Hydraulic Hose Group

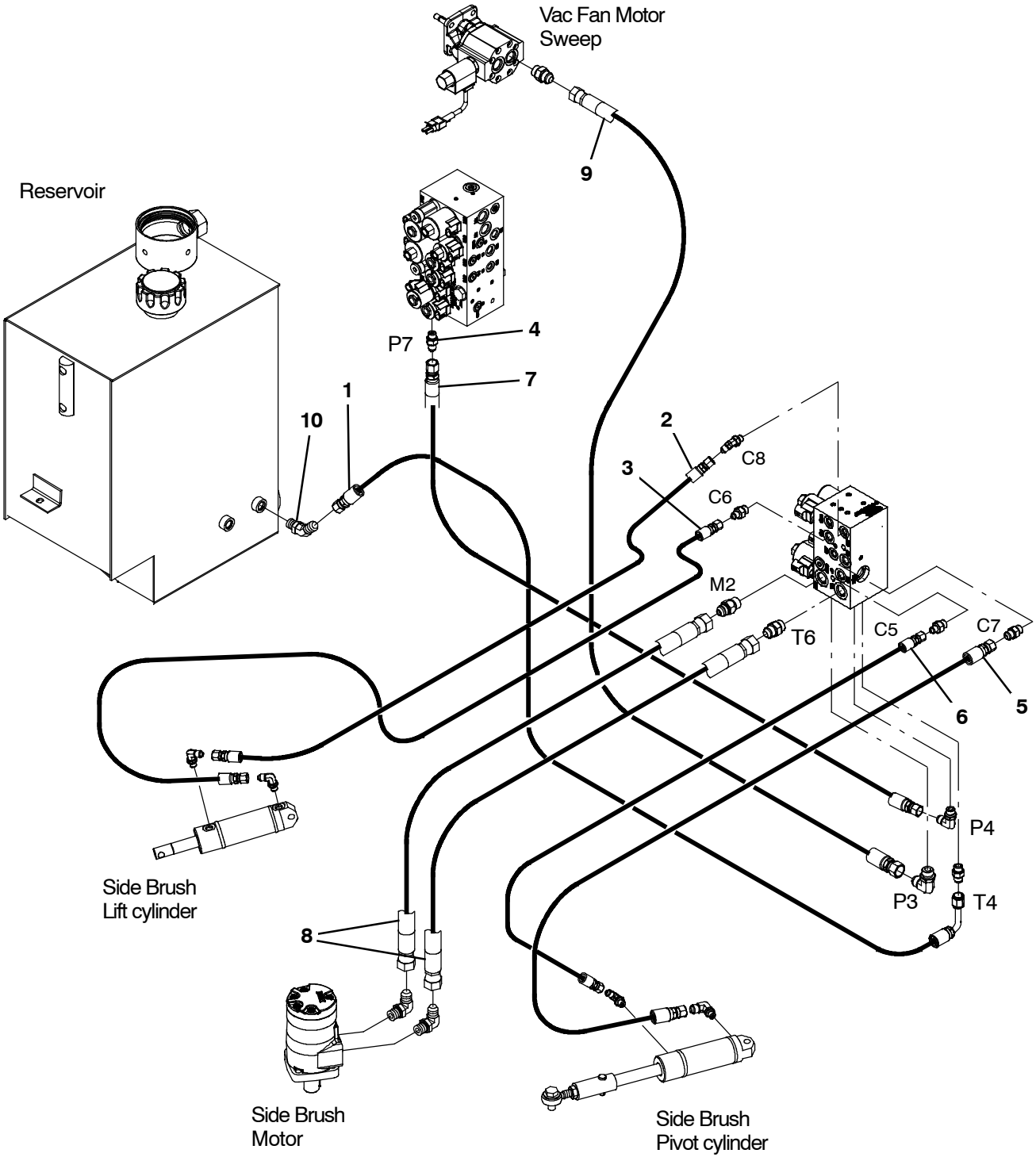

354658

Fig. 8 - Side Brush Hydraulic Hose Group

Ref.	Part No.	Serial Number	Description	Qty.
1	361047	(000000-)	Hose, Hyd, Med06, Jf06e90l/Jf06str,038.0	1
2	1025990	(000000-)	Hose, Hyd, Tc04, Jf04str/Jf04str, 039.0	1
3	1036901	(000000-)	Hose, Hyd, Tc04, Jf04str/Jf04str, 044.0	1
4	56690	(000000-)	Fitting, Hyd, Str, Jm06/Om06	1
5	1036904	(000000-)	Hose, Hyd, Tc06, Jf06str/Jf06str, 028.0	1
6	1036903	(000000-)	Hose, Hyd, Tc04, Jf04str/Jf04str, 025.0	1
7	377236	(000000- 003999)	Hose, Hyd, Tc06, Jf06str/Jf06str, 062.0	1
7	1041389	(004000-)	Hose, Hyd, Tc06, Jf06str/Jf06str, 086.0	1
8	1036902	(000000-)	Hose, Hyd, Tc08, Jf08str/Jf08str, 039.0	2
9	1036907	(000000- 003999)	Hose, Hyd, Tc08, Jf08str/Jf08str, 060.0	1
9	1036946	(004000-)	Hose, Hyd, Tc08, Jf08str/Jf08str, 084.0	1
10	47522	(000000-)	Fitting, Hyd, E45, Jm06/Om06	1

Fig. 9 - FaST Pumps and Detergent Group

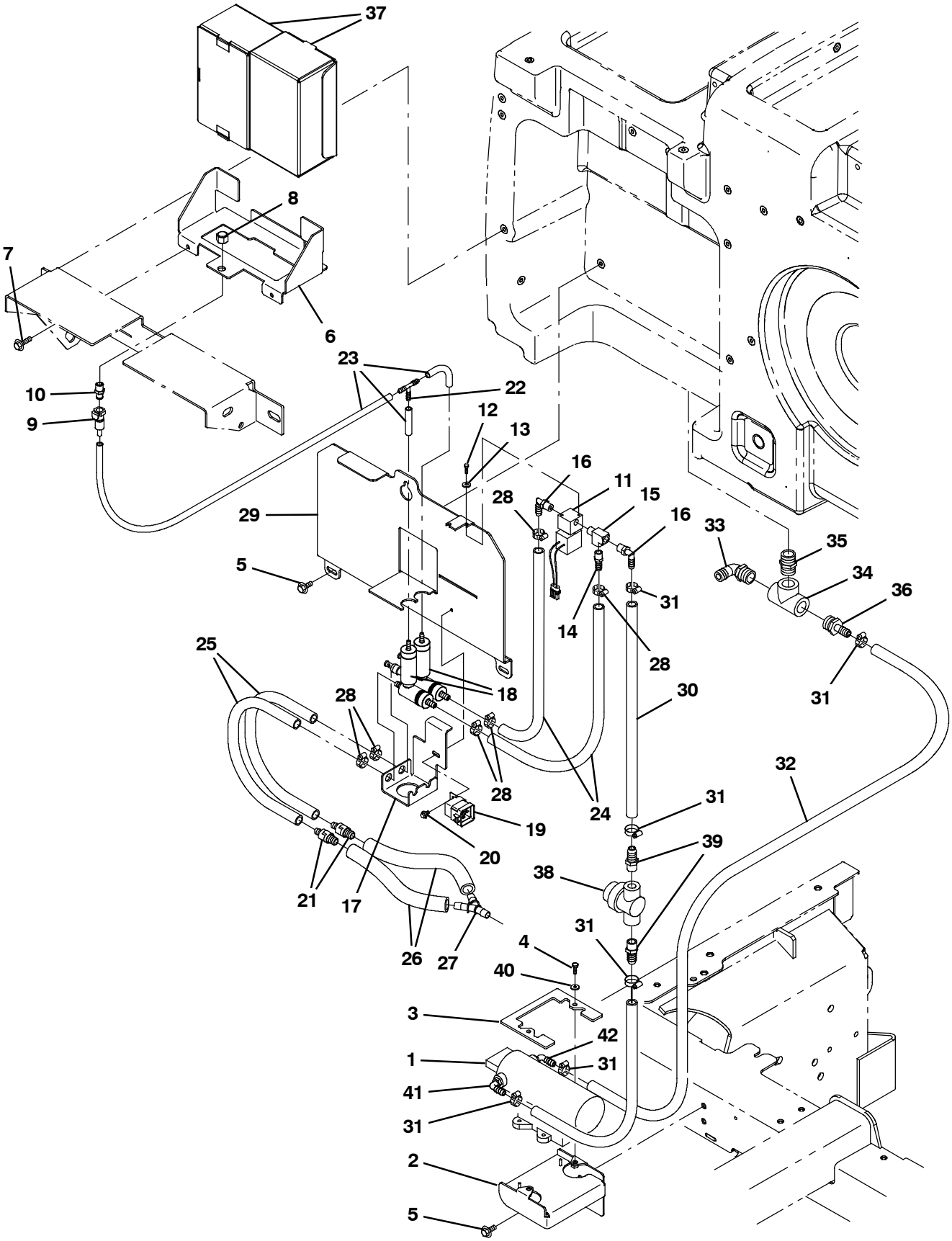

354721

Fig. 9 - FaST Pumps and Detergent Group

Ref.	Part No.	Serial Number	Description	Qty.
1	1036801	(000000-)	Pump, Soltn, 13.7vdc, 65psi [FaST Ii+]	1
2	1039356	(000000-)	Bracket, Retainer, Pump	1
3	1039357	(000000-)	Bracket, Retainer, Pump	1
4	15678	(000000-)	Screw, Hex, M6 X 1.00 X 16, Ss	2
5	1020341	(000000-)	Screw, Hex, M8 X 1.25 X 20, Ss, Sems	7
6	1033791	(000000-)	Bracket, Mtg [FaST]	1
7	76099	(000000-)	Screw, Hex, M8 X 1.25 X 25, Fmg	2
8	1005435	(000000-)	Fitting, Plstc, Pipe, Cap, Pf04	1
9	1002898	(000000-)	Fitting, Plstc, Str, Bm04, Cplg, Fem	1
10	1002899	(000000-)	Fitting, Plstc, Str, Pm04, Cplg, Mal	1
11	1018098	(000000-)	Valve, Water, Solenoid, 12vdc 6.0mm Pf04	1
12	09200	(000000-)	Screw, Pan, Phl, M5 X 0.80 X 12, Ss	2
13	01683	(000000-)	Washer, Flat, 10, Ss	2
14	150540	(000000-)	Fitting, Plstc, Str, Bm06/Pm04	1
15	150709	(000000-)	Fitting, Brs, Tee, Pm04/Pf04/Pf04, Run	1
16	57248	(000000-)	Fitting, Plstc, E90, Bm06/Pm04, Nyl	2
17	1033957	(000000-)	Bracket, Mtg [FaST]	1
18	9008868	(000000-)	FaST Kit, Injector [M20/T20/M30 FaST III] (See Breakdown)	2
19	56186	(000000-)	Relay, 12vdc, 040a, Spdt No	1
20	361339	(000000-)	Screw, Hex, M6 X 1.00 X 16, Fmg	1
21	1035794	(000000-)	Valve, Check, 0005psi Bm06/Bm08	2
22	150713	(000000-)	Fitting, Plstc, Tee, Bm04/Bm04/Bm04	1
23	1006415	(000000-)	Hose, Afmkt, Pvc, Clr, 0.25id, 03ft	1
24	1006416	(000000-)	Hose, Afmkt, Pvc, Clr, 0.38id, 03ft	1
25	1024237	(000000-)	Hose, Afmkt, Pvc, Wir, 0.50id, 03ft, Clr	1
26	1014929	(000000-)	Hose, Afmkt, Pvc, Clr, 0.38id, 01ft	1
27	1010668	(000000-)	Fitting, Plstc, Y, Bm08/Bm08/Bm08, Nyl	1
28	43844	(000000-)	Clamp, Hose, Wormdrive, 0.25- 0.62d, .31w	6
29	1037262	(000000-)	Plate, Mtg [FaST]	1
30	1006400	(000000-)	Hose, Afmkt, Pvc, Brd, 0.38id, 03ft, Clr	1
31	54333	(000000-)	Clamp, Hose, Wormdrive, 0.31- 0.88d, .31w	4
32	1011412	(000000-)	Hose, Afmkt, Pvc, Brd, 0.50id, 08ft, Clr	1
33	14877	(000000- 004690)	Fitting, Plstc, E90, Bm12/Pm12	1
33	73468	(004691-)	Fitting, Plstc, E90, Bm10/Pm12	1
34	42133A	(000000-)	Fitting, Plstc, Tee, Pf12/Pf12/Pf12	1
35	24544	(000000-)	Fitting, Plstc, Str, Pm12/Pm12 1.60l	1
36	79273- 1	(000000-)	Fitting, Plstc, Str, Bm08/Pm12	1
37	1017022	(000000-)	Detergent, Pkg, 2 Liter, Sgl [665]	2
37	1034126	(000000-)	Detergent, Pkg, 2 Liter, Sgl [965, Tco]	2
38	1005302	(000000-)	Filter, In- Line, Pf06/Pf06 080Mesh 02.6L	1
39	150538	(000000-)	Fitting, Plstc, Str, Bm06/Pm06	2
40	01684	(000000-)	Washer, Flat, 0.27B 0.69D .05, Ss	2
41	1049254	(000000-)	Fitting, Nyl, Qdc, E90, Bm08/ Qm10	1
42	1049259	(000000-)	Fitting, Nyl, Qdc, E90, Bm06/ Qm10	1

Fig. 10 - FaST Solution Supply Group

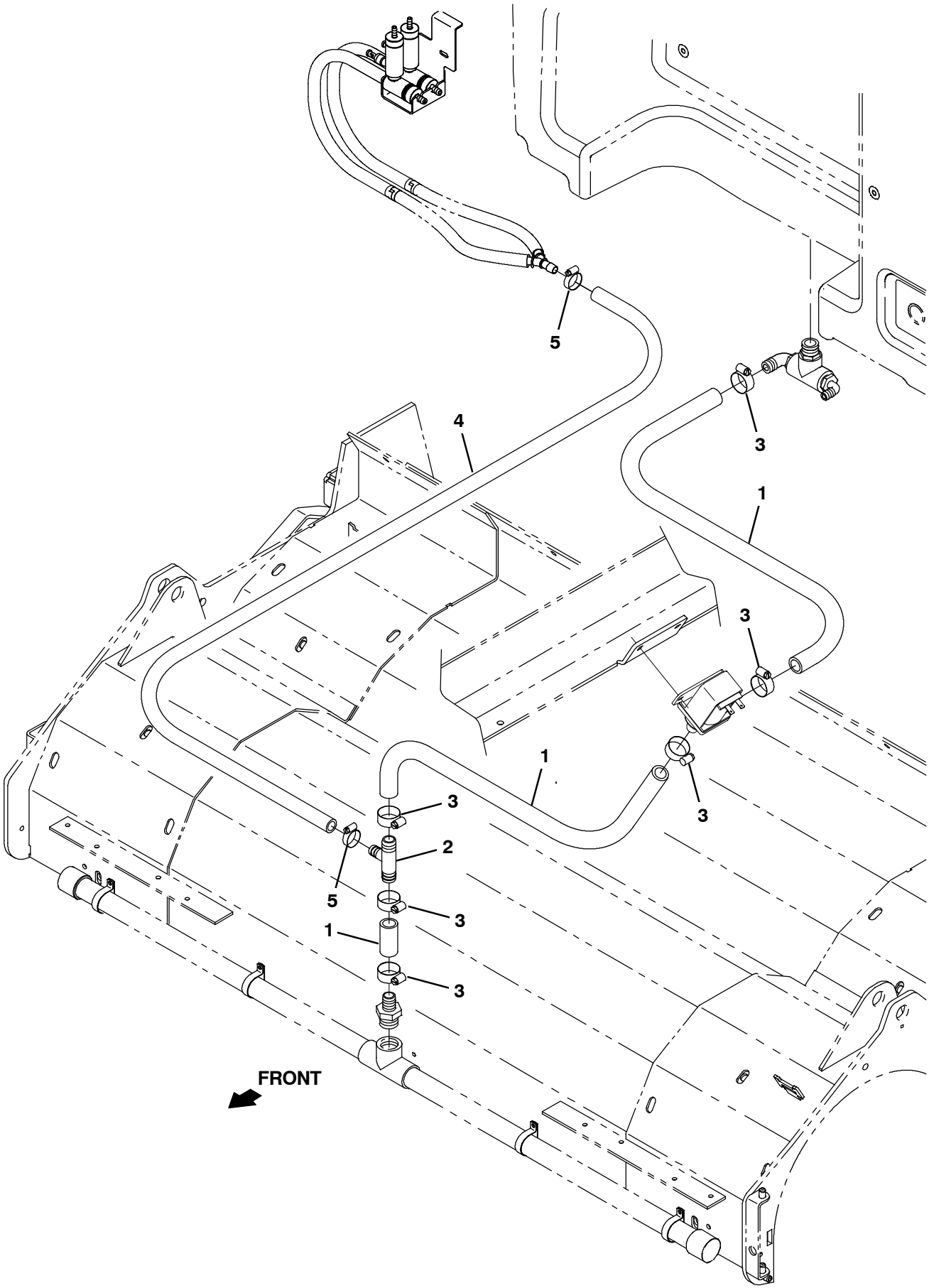

354722

Fig. 10 - FaST Solution Supply Group

Ref.	Part No.	Serial Number	Description	Qty.
1	1015045	(000000- 004690)	Hose, Afmkt, Pvc, Brd, 0.75id, 08ft, Clr	1
1	1015032	(004691-)	Hose, Afmkt, Pvc, Brd, 0.62id, 08ft, Clr	1
2	385644	(000000- 004690)	Fitting, Plstc, Tee, Bm08/Bm12/Bm12, Br	1
2	1015486	(004691-)	Fitting, Plstc, Tee, Bm08/Bm10/Bm10, Br	1
3	63810	(000000-)	Clamp, Hose, Wormdrive, 0.56- 1.06d, .56w	6
4	1011412	(000000-)	Hose, Afmkt, Pvc, Brd, 0.50id, 08ft, Clr	1
5	54333	(000000-)	Clamp, Hose, Wormdrive, 0.31- 0.88d, .31w	2

Fig. 11 - FaST Solution Supply Group, Side Brush

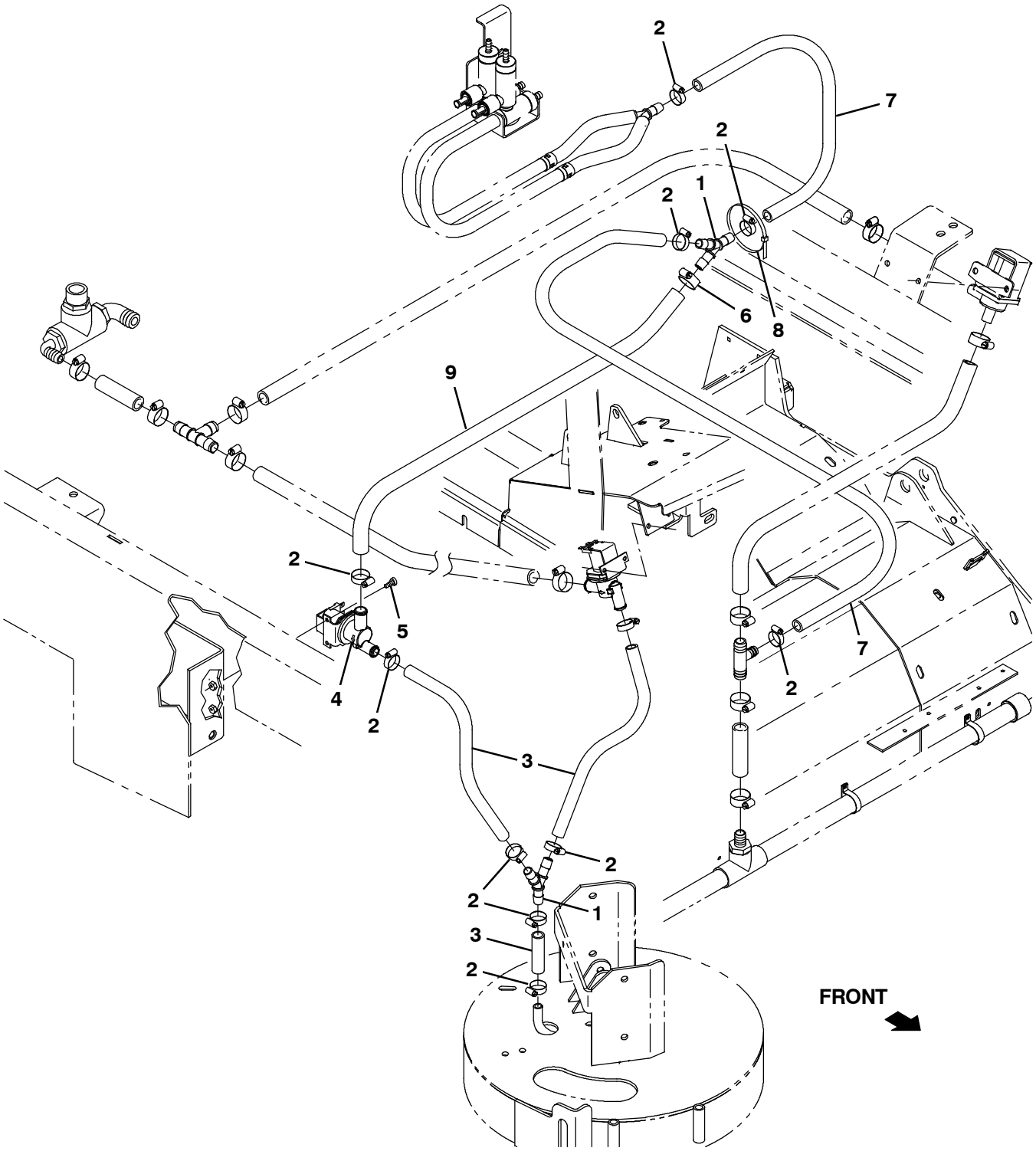

354723

Fig. 11 - FaST Solution Supply Group, Side Brush

Ref.	Part No.	Serial Number	Description	Qty.
1	1010668	(000000-)	Fitting, Plstc, Y, Bm08/Bm08/Bm08, Nyl	2
2	54333	(000000-)	Clamp, Hose, Wormdrive, 0.31- 0.88d, .31w	10
3	1015067	(000000-)	Hose, Afmkt, Pvc, Clr, 0.50id, 08ft	1
4	1037825	(000000-)	Valve, Solenoid, 12vdc, Water Flow	1
5	24196	(000000-)	Screw, Pan, Phl, M5 X 0.80 X 20, Ss	2
6	63810	(000000-)	Clamp, Hose, Wormdrive, 0.56- 1.06d, .56w	1
7	1011412	(000000-)	Hose, Afmkt, Pvc, Brd, 0.50id, 08ft, Clr	1
8	763116	(000000-)	Tie, Cable, Nyl, 15.3l . W 4.5 Max D	1
9	31543	(000000-)	Hose, Heater, E90, 0.62id, 24.0 4.0	1

Fig. 12 - FaST Wire Harness Group

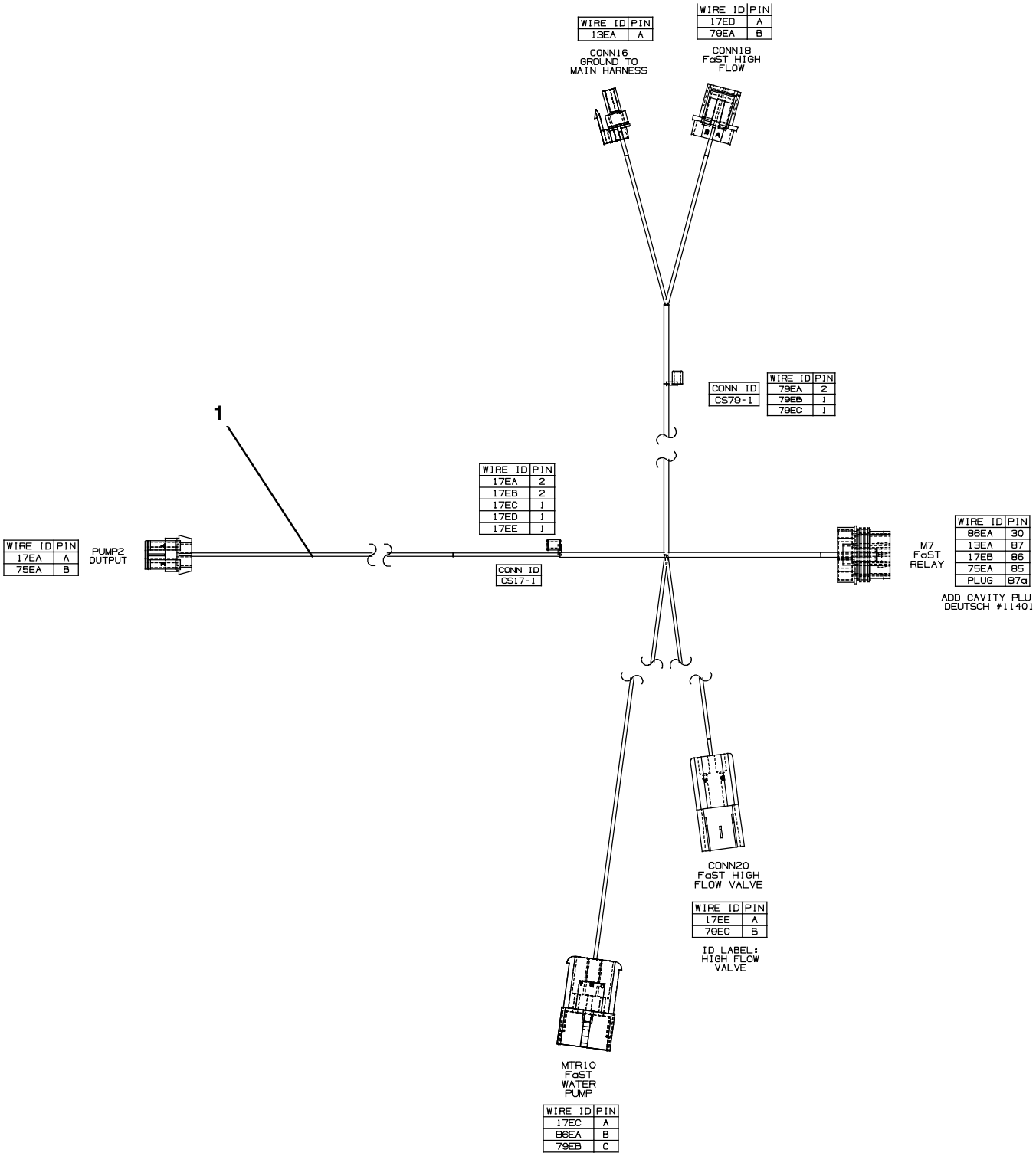

354724

Fig. 12 - FaST Wire Harness Group

Ref.	Part No.	Serial Number	Description	Qty.
1	1037809	(000000-)	Harness, Wire [FaST Gen 2]	1

Fig. 13 - ec-H20 Solution Pump Group

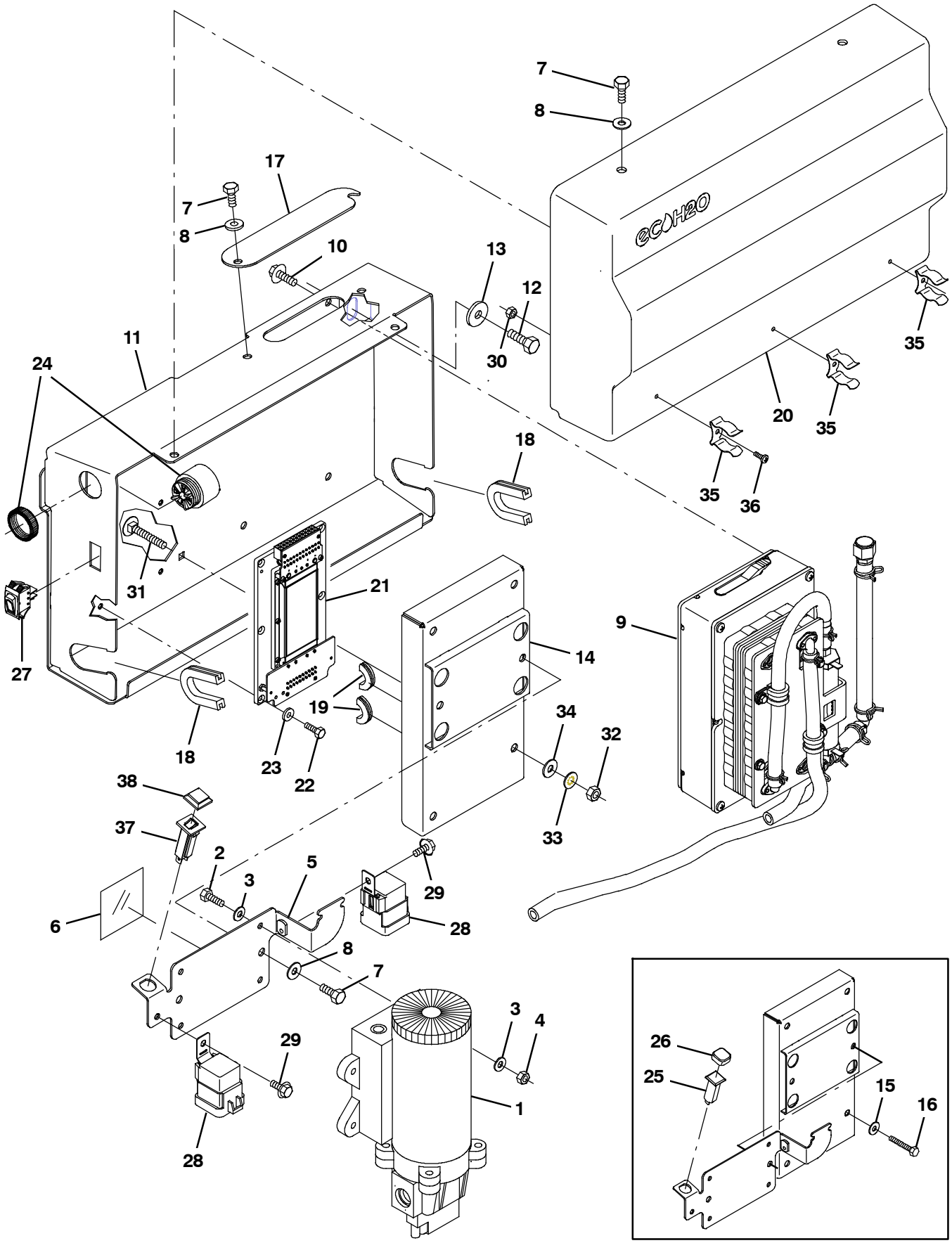

356033

Fig. 13 - ec-H20 Solution Pump Group

Ref.	Part No.	Serial Number	Description	Qty.
1	1060624	(000000-)	Pump, Soltn, Ele, 13.7vdc,12/28psi	1
2	09252	(000000-)	Screw, Hex, M5 X 0.80 X 20, 8.8	4
3	19066	(000000-)	Washer, Flat, 10	8
4	06549	(000000-)	Nut, Hex, Lock, M5 X 0.80, Nl	4
5	1060273	(000000-)	Plate, Mtg, Pump	1
6	1059677	(000000-)	Strip, Rbr, 0.06 03.54w 03.5l [Neo/60]	1
7	09744	(000000-)	Screw, Hex, M6 X 1.00 X 12, Ss	6
8	01684	(000000-)	Washer, Flat, 0.27b 0.69d .05, Ss	6
9	9007882	(000000-)	Module Kit, Replmt [Ec-H20] (See Breakdowns)	1
10	1040467	(000000-)	Screw, Hex, M6 X 1.00 X 20, 9.8, Sems	4
11	1060292	(000000-)	Plate Wldt, Mtg	1
12	09740	(000000-)	Screw, Hex, M8 X 1.25 X 20, Ss	2
13	1017218	(000000-)	Washer, Flat, 0.32b 1.00d .12, Ss	2
14	1060185	(000000-)	Cover Wldt, Power Supply	1
15	01684	(000000- xxxxxx)	Washer, Flat, 0.27b 0.69d .05, Ss	4
16	07805	(000000- xxxxxx)	Screw, Hex, M6 X 1.00 X 35, Ss	4
17	1060291	(000000-)	Plate, Inspection	1
18	1020168	(000000-)	Molding, Afmkt, Trim, Pvc, .08 .11, 01Ft	1
19	10632-4	(000000-)	Grommet, Rbr, 0.62id, F/0.9h, .06 Matl	1
20	1060719	(000000-)	Cover, Trimmed	1
21	1058963	(000000-)	Converter, Ele, 12-36 Vdc	1
22	09206	(000000-)	Screw, Hex, M4 X 0.70 X 12, 8.8	4
23	19065	(000000-)	Washer, Flat, 08	4
24	1052726	(000000-)	Alarm, 9-48vdc, 95 Db(A) [Ec-H20]	1
25	1053078	(000000- 001645)	Circuitbreaker, 2.0a, Resetable	1
26	1046173	(000000- 001645)	Boot, Circuitbreaker	1
27	1044393	(000000-)	Switch, Rocker, Spst, Mom	1
28	56186	(000000-)	Relay, 12vdc, 040a, Spdt No	2
29	223198	(000000-)	Screw, Hex, M5 X 0.80 X 10, Fmg	2
30	33932	(000000-)	Nut, Hex, Lock, M4 X 0.70, Nl, Ss	3
31	1062804	(xxxxxx-)	Bolt, Carriage, M06 X 1.00 X 40, 4.6	4
32	41359	(xxxxxx-)	Nut, Hex, Std, M6 X 1.00, 8	4
33	32982	(xxxxxx-)	Washer, Lock, Int, 0.25	4
34	32483	(xxxxxx-)	Washer, Flat, 0.25, Sae	4
35	1029057	(000000-)	Clip, Grip, Finger, 0.88-1.25d	3
36	12323	(000000-)	Screw, Pan, Phl, M4 X 0.70 X 20, Ss	3
37	1064183	(001646-)	Circuitbreaker, 02.0a, Resetable	1
38	1064191	(001646-)	Boot, Circuitbreaker	1

Fig. 14 - ec-H20 Solution Pump Supply Group

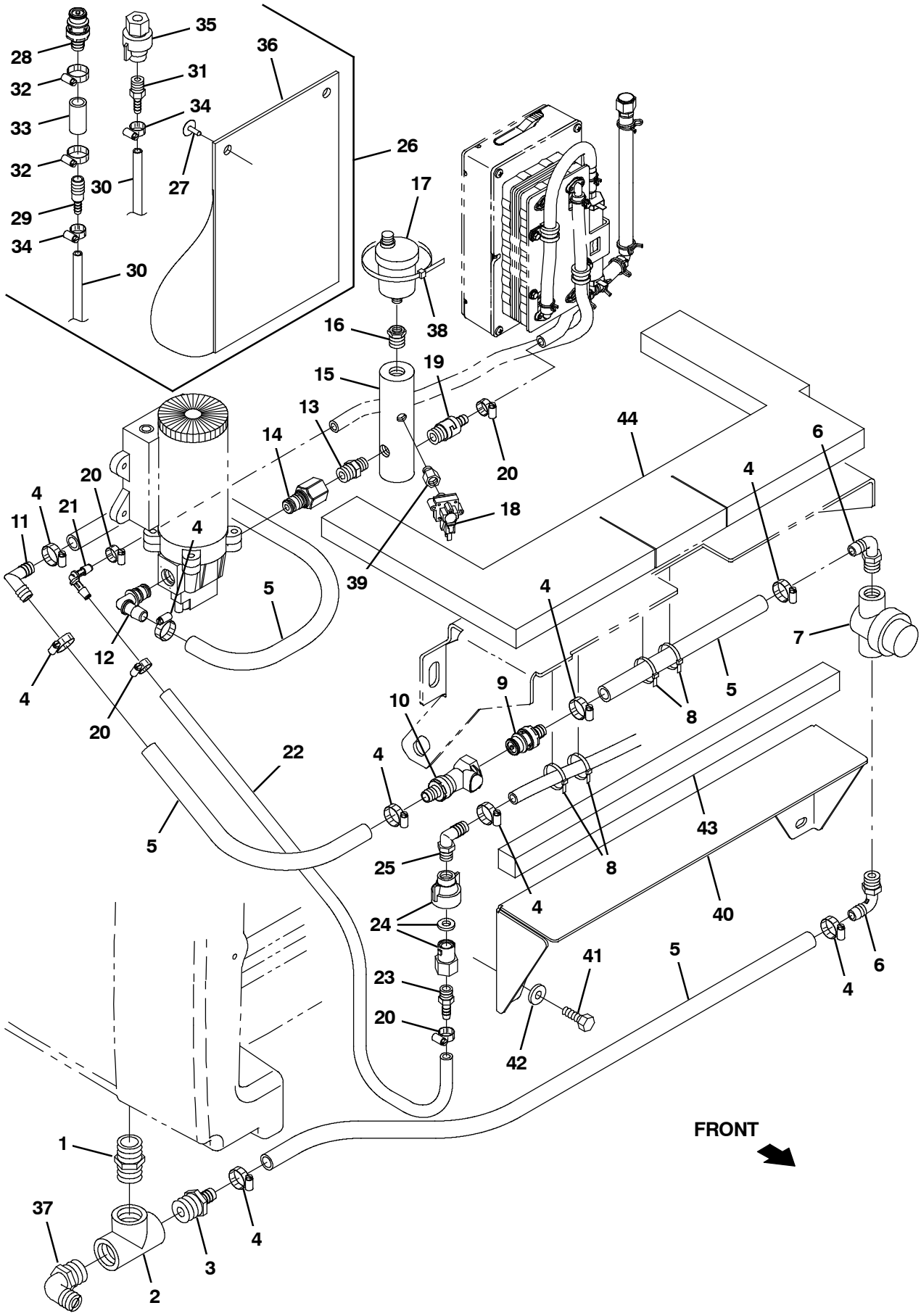

356045

Fig. 14 - ec-H20 Solution Pump Supply Group

	Ref.	Part No.	Serial Number	Description	Qty.
	1	24544	(000000-)	Fitting, Plstc, Str, Pm12/Pm12 1.60l	1
	2	42133A	(000000-)	Fitting, Plstc, Tee, Pf12/Pf12/Pf12	1
	3	79273-1	(000000-)	Fitting, Plstc, Str, Bm08/Pm12	1
	4	54333	(000000-)	Clamp, Hose, Wormdrive, 0.31-0.88d, .31w	9
	5	1011412	(000000-)	Hose, Afmkt, Pvc, Brd, 0.50id, 08ft, Clr	1
	6	64778	(000000-)	Fitting, Plstc, E90, Bm08/Pm06	2
	7	1005302	(000000-)	Filter, In-Line, Pf06/Pf06 080mesh 02.6l	1
	8	763116	(000000-)	Tie, Cable, Nyl, 15.3l . W 4.5 Max D	4
	9	1017415	(000000-)	Insert, Cplg, Qm, Bm08	1
	10	1017413	(000000-)	Housing, Cplg, Qf / Pm08	1
	11	63987-1	(000000-)	Fitting, Plstc, E90, Bm08/Bm08	1
	12	1049254	(000000-)	Fitting, Nyl, Qdc, E90, Bm08/ Qm10	1
	13	1059372	(000000-)	Fitting, Plstc, Str, Pf06/Qm10, Pvc	1
	14	1005219	(000000-)	Fitting, Plstc, Str, Pm04/Pm06, Nyl	1
	15	1060596	(000000-)	Manifold, Water	1
	16	24698	(000000-)	Fitting, Brs, Str, Pf02/Pm06	1
	17	1017386	(000000-)	Valve, Vent, Air, Float Type	1
	18	1058935	(000000-)	Switch, Press, 50 Psi, Pm02	1
	19	1060693	(000000-)	Valve, Check, 0005psi Pm04/Bm06	1
	20	43844	(000000-)	Clamp, Hose, Wormdrive, 0.25-0.62d, .31w	4
	21	1059391	(000000-)	Fitting, Plstc, E90, Bm05/Bm05, Nyl	1
	22	1052336	(000000-)	Hose, Afmkt, PVC, Brd, 0.31Id, 03Ft, Clr	2
	23	1052017	(000000-)	Fitting, Plstc, Str, Bm05/Pm04	1
	24	1071280	(000000-)	Fitting Assy, Qdc, Pf04	1
	25	65581	(000000-)	Fitting, Plstc, E90, Bm08/Pm04	1
▽	26	9014281	(000000-)	ec-H2O Kit, Flush, Replmt[M20, M30&T20]	1
▲	27	72968	(000000-)	Rivet, Plstc, .250d X 0.90	2
▲	28	1017415	(000000-)	Insert, Cplg, Qm, Bm08	1
▲	29	630164	(000000-)	Fitting, Plstc, Str, Bm04/Bm08	1
▲	30	1006415	(000000-)	Hose, Afmkt, Pvc, Clr, 0.25id, 03ft	2
▲	31	50901	(000000-)	Fitting, Plstc, Str, Bm04/Pm04	1
▲	32	54333	(000000-)	Clamp, Hose, Wormdrive, 0.31-0.88d, .31w	2
▲	33	1011403	(000000-)	Hose, Afmkt, Pvc, Brd, 0.50id, 01ft, Clr	1
▲	34	43844	(000000-)	Clamp, Hose, Wormdrive, 0.25-0.62d, .31w	2
▲	35	1071280	(000000-)	Fitting Assy, Qdc, Pf04	1
▲	36	48790	(000000-)	Pouch	1
	37	14877	(000000-004690)	Fitting, Plstc, E90, Bm12/Pm12	1
	37	73468	(004691-)	Fitting, Plstc, E90, Bm10/Pm12	1
	38	49266	(000000-)	Tie, Cable, Nyl, 07.3l .19w 1.8 Max D	1
	39	1062403	(000000-)	Fitting, Brs, Snubber, Pm02/Pf02	1
	40	1060290	(000000-)	Plate, Sppt	1
	41	09740	(000000-)	Screw, Hex, M8 X 1.25 X 20, Ss	2
	42	1017218	(000000-)	Washer, Flat, 0.32b 1.00d .12, Ss	2
	43	1060845	(000000-)	Insulation, Acstc, Rear	1
	44	1060386	(000000-)	Insulation, Acstc, Adh	1

Fig. 15 - ec-H20 Solution Supply Group

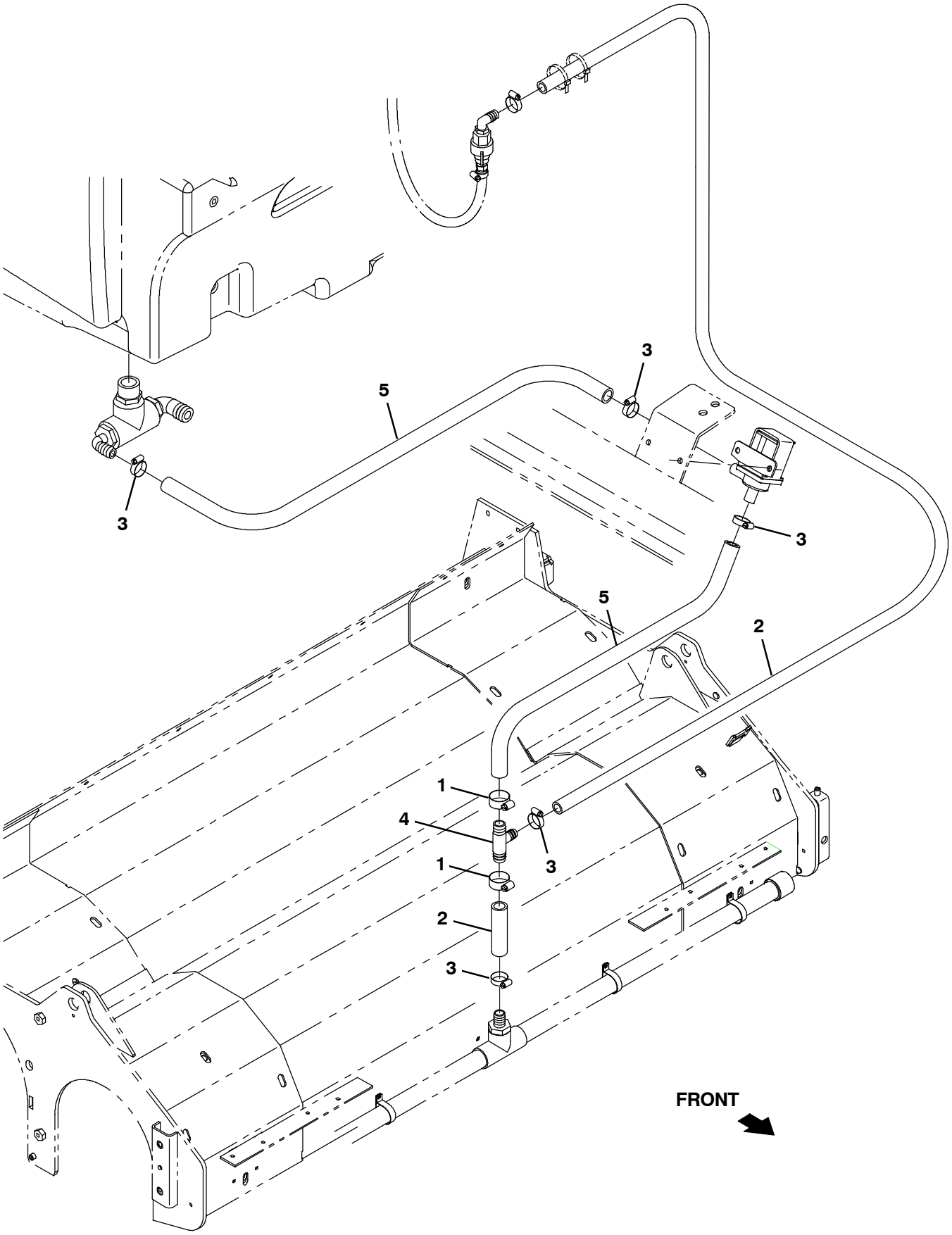

356043

Fig. 15 - ec-H20 Solution Supply Group

Ref.	Part No.	Serial Number	Description	Qty.
1	63810	(000000-)	Clamp, Hose, Wormdrive, 0.56-1.06d, .56w	2
2	1011837	(000000-)	Hose, Afmkt, Pvc, Brd, 0.50id, 12ft, Clr	1
3	54333	(000000-)	Clamp, Hose, Wormdrive, 0.31-0.88d, .31w	5
4	385644	(000000-004690)	Fitting, Plstc, Tee, Bm08/Bm12/Bm12, Br	1
4	1015486	(004691-)	Fitting, Plstc, Tee, Bm08/Bm10/Bm10, Br	1
5	1015045	(000000-004690)	Hose, Afmkt, Pvc, Brd, 0.75id, 08ft, Clr	1
5	1015032	(004691-)	Hose, Afmkt, Pvc, Brd, 0.62id, 08ft, Clr	1

Fig. 16 - ec-H20 Solution Supply Group with Side Brush

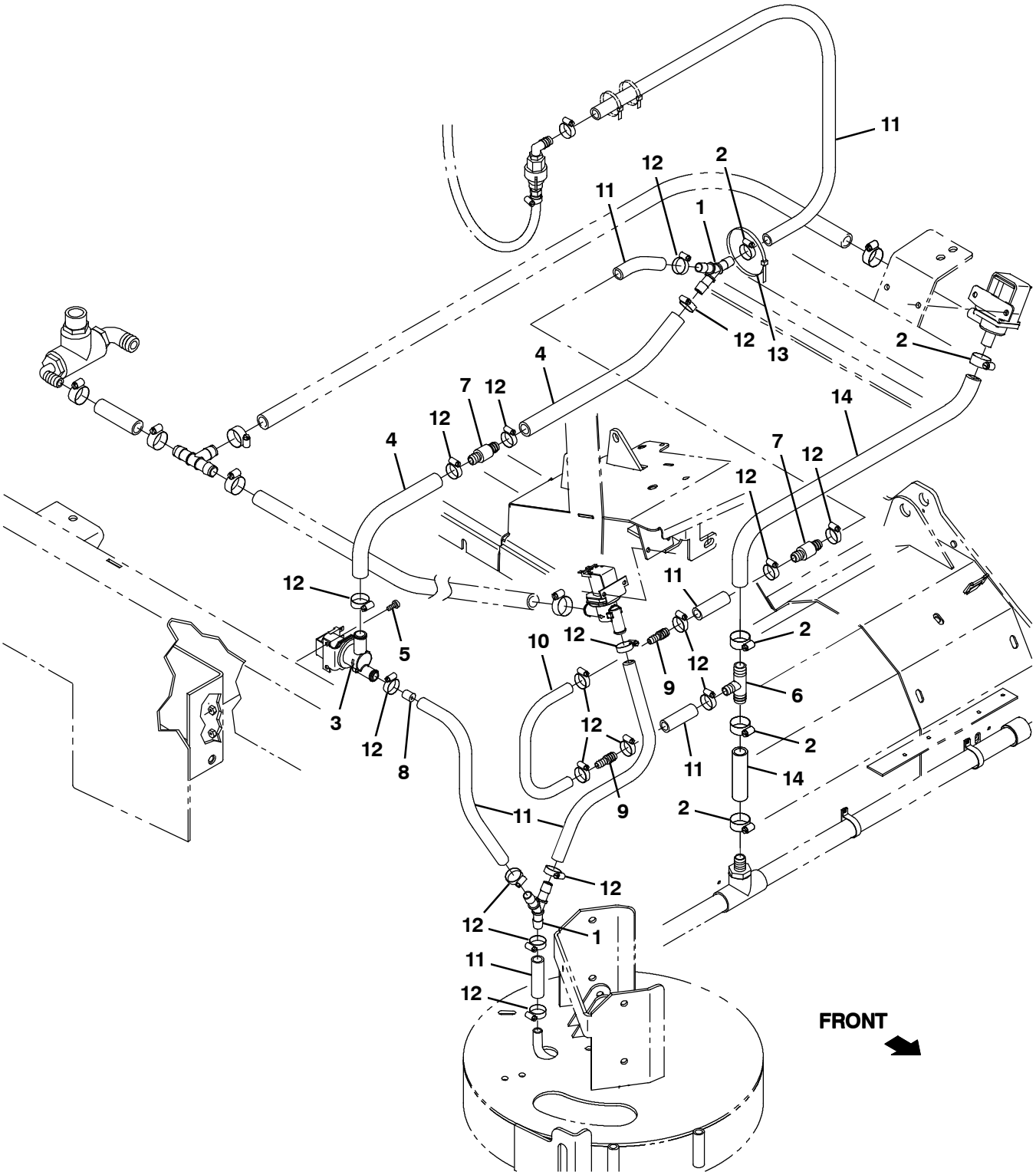

356044

Fig. 16 - ec-H20 Solution Supply Group with Side Brush

Ref.	Part No.	Serial Number	Description	Qty.
1	1010668	(000000-)	Fitting, Plstc, Y, Bm08/Bm08/Bm08, Nyl	1
2	63810	(000000-)	Clamp, Hose, Wormdrive, 0.56-1.06d, .56w	4
3	1037825	(000000-)	Valve Assy, Water, Solenoid, 12vdc	1
4	31543	(000000-)	Hose, Heater, E90, 0.62id, 24.0 4.0	1
5	24196	(000000-)	Screw, Pan, Phl, M5 X 0.80 X 20, Ss	2
6	385644	(000000-004690)	Fitting, Plstc, Tee, Bm08/Bm12/Bm12, Br	1
6	1015486	(004691-)	Fitting, Plstc, Tee, Bm08/Bm10/Bm10, Br	1
7	1010614	(000000-)	Valve, Check, 2gpm .5psi Bm08/Bm08	2
8	1061045	(000000-)	Plug, Restrictor	1
9	222375	(000000-)	Fitting, Plstc, Str, Bm06/Bm08	2
10	1014974	(000000-)	Hose, Afmkt, Pvc, Brd, 0.38id, 02ft, Clr	1
11	1011412	(000000-)	Hose, Afmkt, Pvc, Brd, 0.50id, 08ft, Clr	1
12	54333	(000000-)	Clamp, Hose, Wormdrive, 0.31-0.88d, .31w	18
13	763115	(000000-)	Tie, Cable, 6.0l, 1.25d Max	1
14	1015026	(004691-)	Hose, Afmkt, Pvc, Brd, 0.62id, 03ft, Clr	1

Fig. 17 - ec-H20 Wire Harnesses Group

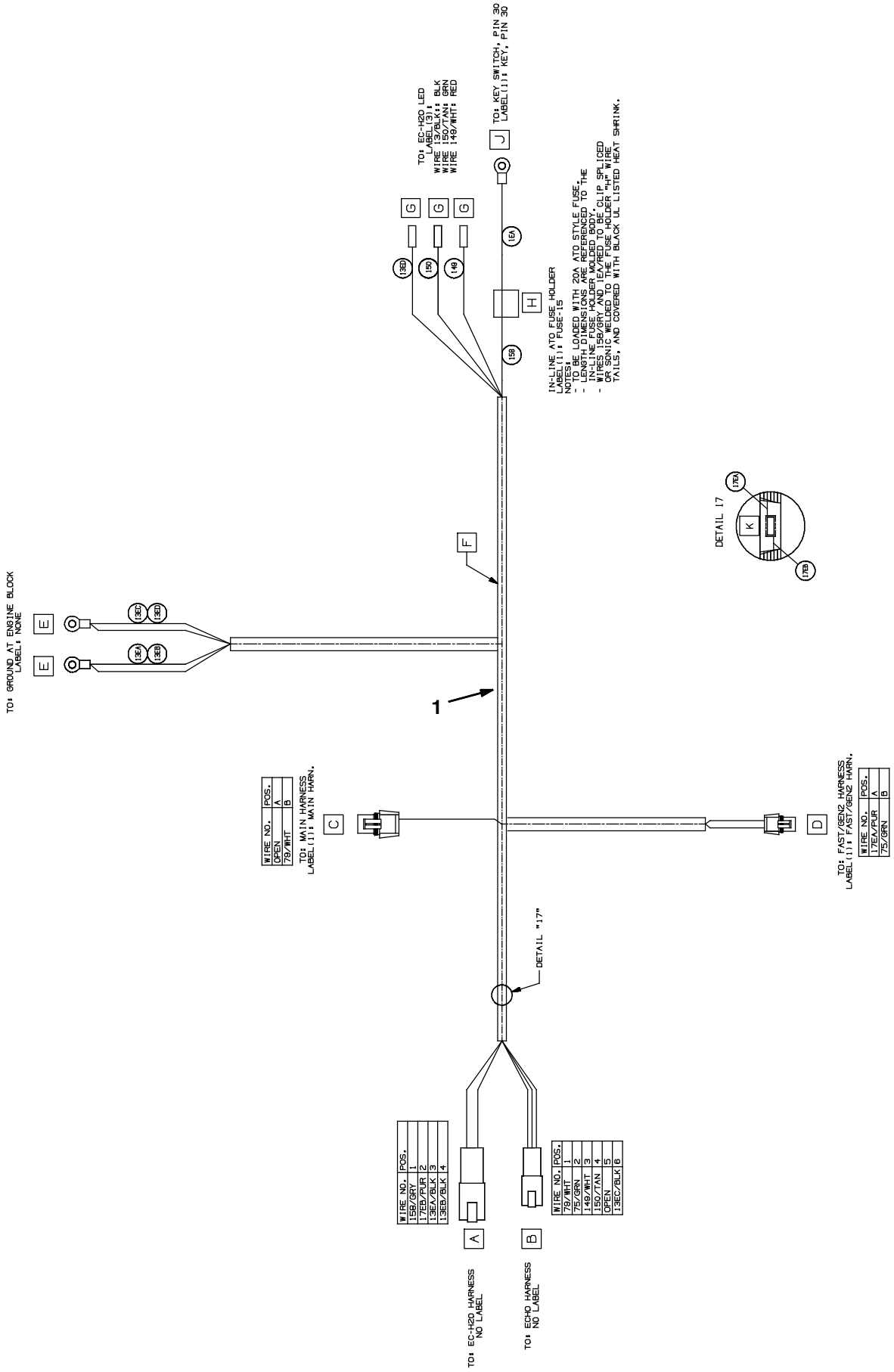

Fig. 17 - ec-H20 Wire Harnesses Group

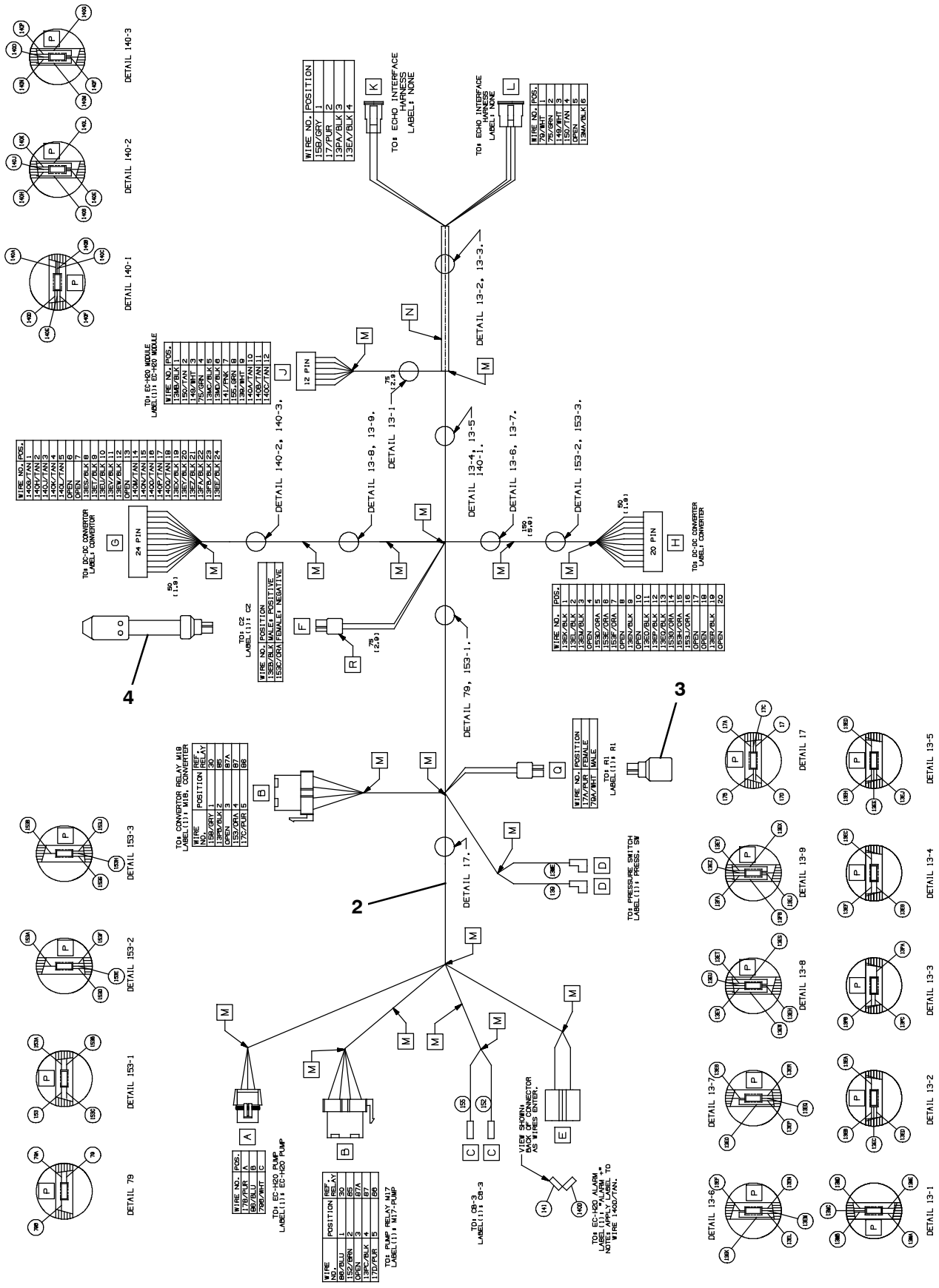

356038

Fig. 17 - ec-H20 Wire Harnesses Group

Ref.	Part No.	Serial Number	Description	Qty.
1	1071947	(000000-)	Harness, Wire [Ec-H2o, Mako, 2.0l & Dsl]	1
2	1060871	(000000-)	Harness, Wire [Ec-H2o]	1
3	1060880	(000000-)	Resistor, Ele, Plug [430 , 2w]	1
4	1060881	(000000-)	Capacitor, Plug [4700uf, 25v]	1

Fig. 18 - Backup Alarm Kit

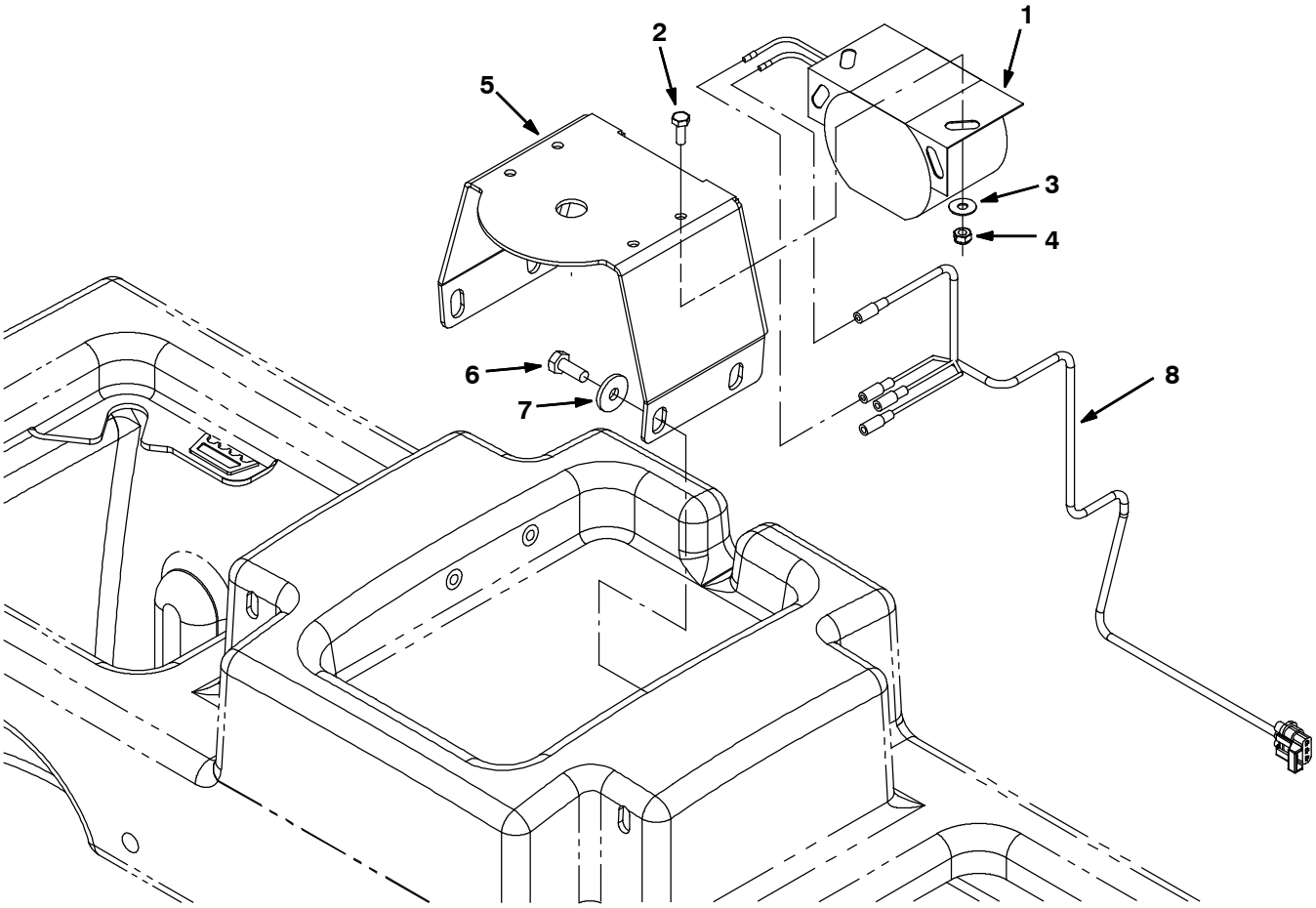

354473

	Ref.	Part No.	Serial Number	Description	Qty.
▽		9001321	(000000-)	Alarm Kit, Backup, Ci [M20/T20/M30]	1
▲	1	9007131	(000000-)	Alarm Assy, Backup, 12/48Vdc	1
▲	2	24196	(000000-)	Screw, Pan, Phl, M5 X 0.80 X 20, Ss	2
▲	3	19066	(000000-)	Washer, Flat, 10	2
▲	4	09739	(000000-)	Nut, Hex, Lock, M5 X 0.80, Nl, Ss	2
▲	5	1019445	(000000-)	Bracket, Sppt, Strobe Light	1
▲	6	09740	(000000-)	Screw, Hex, M8 X 1.25 X 20, Ss	4
▲	7	1017218	(000000-)	Washer, Flat, 0.32b 1.00d .12, Ss	4
▲	8	1019971	(000000-)	Harness, Warning / Backup [M20 & T20]	1

Fig. 19 - Light Kit, Flashing

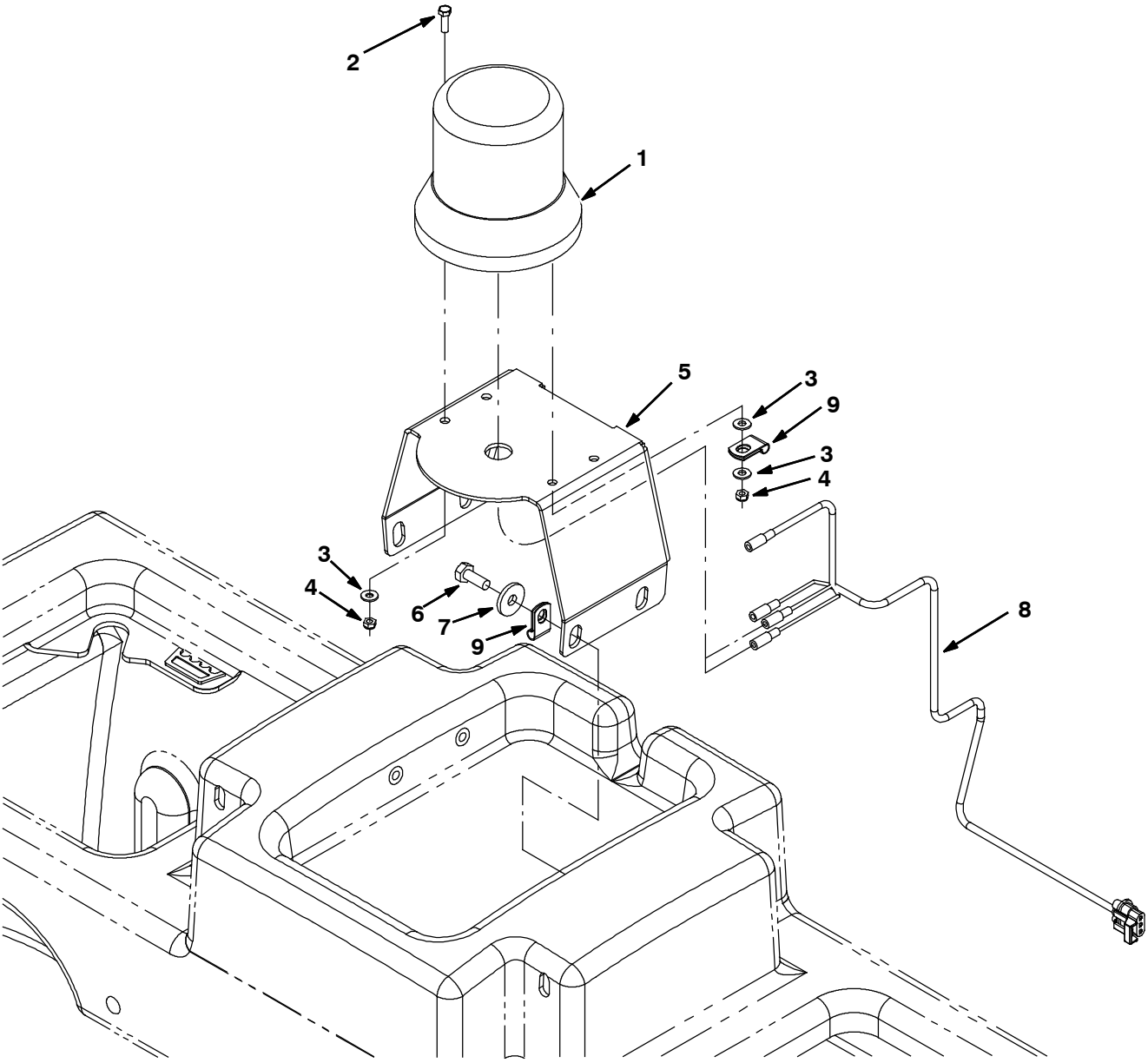

354475

Fig. 19 - Light Kit, Flashing

	Ref.	Part No.	Serial Number	Description	Qty.
▽		9001327	(000000-)	Light Kit, Flsh, Ci [M20 / T20 / M30]	1
▲▽	1	1017248	(000000-)	Light, Flsh, Amb, 12- 48vdc	1
▲▲		9000879	(000000-)	Lens, Amb, F/ Strobe / Flasher	1
▲▲		9000846	(000000-)	Lamp, Bulb, Flsh	1
▲		55272	(000000-)	Terminal, Bullet, Mal, .157d, 12ga	2
▲	2	24196	(000000-)	Screw, Pan, Phl, M5 X 0.80 X 20, Ss	2
▲	3	19066	(000000-)	Washer, Flat, 10	2
▲	4	09739	(000000-)	Nut, Hex, Lock, M5 X 0.80, Nl, Ss	2
▲	5	1019445	(000000-)	Bracket, Sppt, Strobe Light	1
▲	6	09740	(000000-)	Screw, Hex, M8 X 1.25 X 20, Ss	4
▲	7	1017218	(000000-)	Washer, Flat, 0.32b 1.00d .12, Ss	4
▲	8	1019971	(000000-)	Harness, Warning / Backup [M20 & T20]	1
▲	9	46236	(000000-)	Clamp, Cable, Stl, 0.25d X 0.56w, 1hole	2
▲		1027800	(000000-)	Lens, Blu, F/ Strobe / Flasher	1
▲		1027798	(000000-)	Lens, Red, F/ Strobe / Flasher	1

Fig. 20 - Light Kit, Strobe

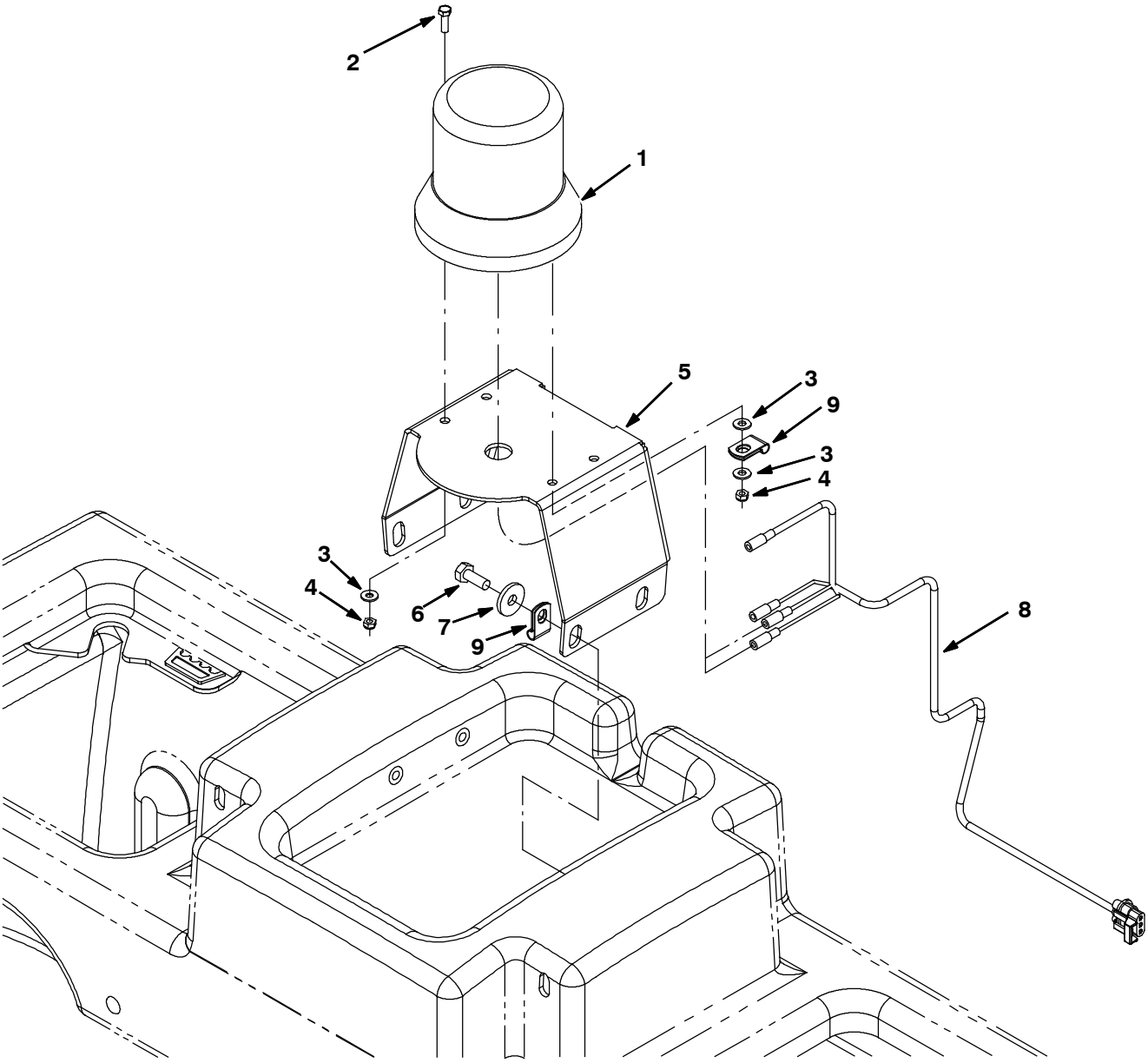

354475

Fig. 20 - Light Kit, Strobe

	Ref.	Part No.	Serial Number	Description	Qty.
▽		9001331	(000000-)	Light Kit, Strobe, Ci [M20 / T20 / M30]	1
▲▽	1	1017250	(000000-)	Light, Strobe, Amb, 12- 48vdc	1
▲▲		9000879	(000000-)	Lens, Amb, F/ Strobe / Flasher	1
▲▲		9000845	(000000-)	Lamp, Bulb, Strobe	1
▲		55272	(000000-)	Terminal, Bullet, Mal, .157d, 12ga	2
▲	2	24196	(000000-)	Screw, Pan, Phl, M5 X 0.80 X 20, Ss	2
▲	3	19066	(000000-)	Washer, Flat, 10	2
▲	4	09739	(000000-)	Nut, Hex, Lock, M5 X 0.80, Nl, Ss	2
▲	5	1019445	(000000-)	Bracket, Sppt, Strobe Light	1
▲	6	09740	(000000-)	Screw, Hex, M8 X 1.25 X 20, Ss	4
▲	7	1017218	(000000-)	Washer, Flat, 0.32b 1.00d .12, Ss	4
▲	8	1019971	(000000-)	Harness, Warning / Backup [M20 & T20]	1
▲	9	46236	(000000-)	Clamp, Cable, Stl, 0.25d X 0.56w, 1hole	2
▲		1027800	(000000-)	Lens, Blu, F/ Strobe / Flasher	1
▲		1027798	(000000-)	Lens, Red, F/ Strobe / Flasher	1

Fig. 21 - Light Kit, Flashing Overhead Guard

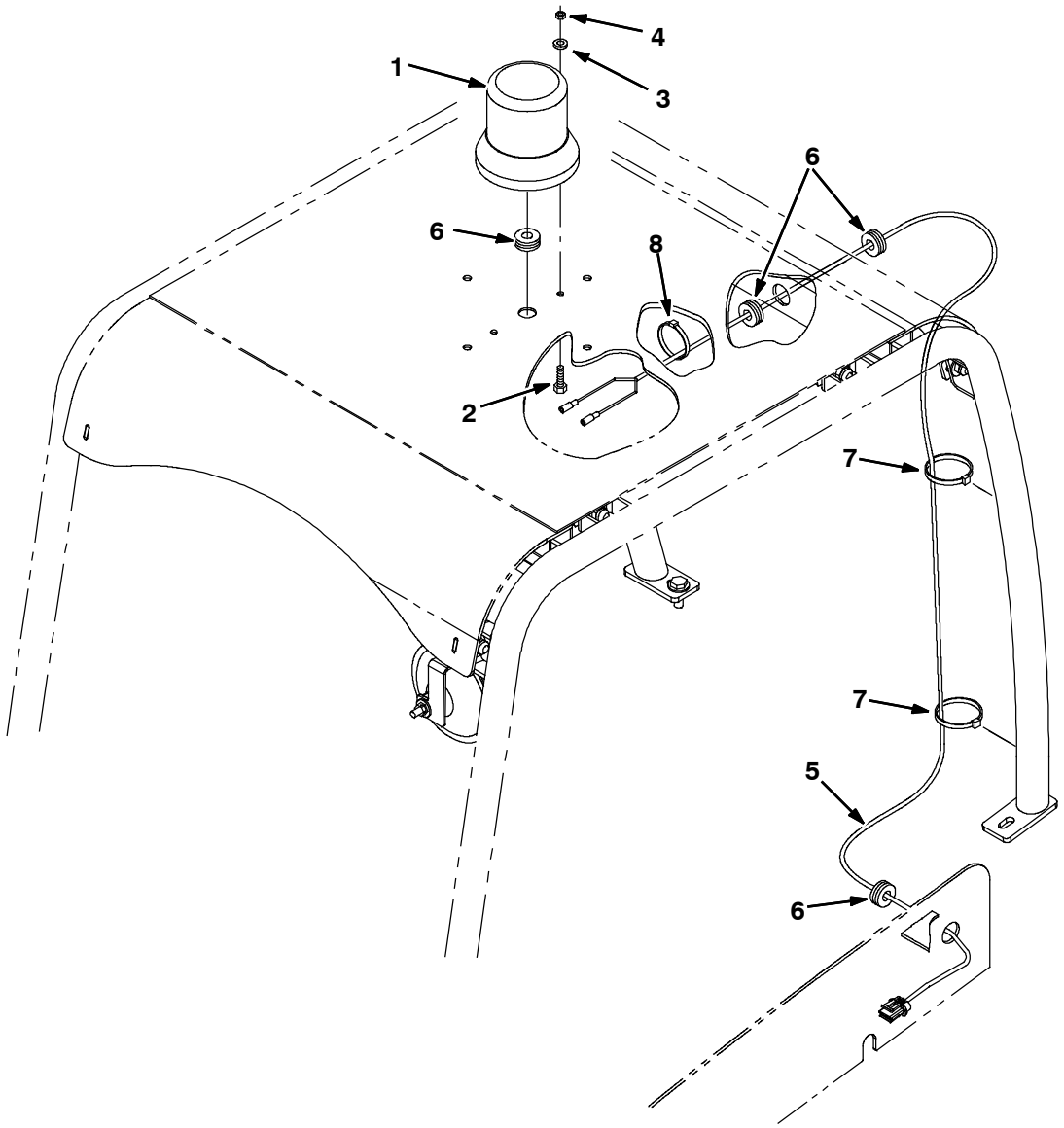

354477

	Ref.	Part No.	Serial Number	Description	Qty.
▽		9001718	(000000-)	Light Kit, Flsh, W/Ohg, Ci[M20/T20/M30]	1
▲▽	1	1017248	(000000-)	Light, Flsh, Amb, 12- 48vdc	1
▲▲		9000879	(000000-)	Lens, Amb, F/ Strobe / Flasher	1
▲▲		9000846	(000000-)	Lamp, Bulb, Flsh	1
▲		55272	(000000-)	Terminal, Bullet, Mal, .157d, 12ga	2
▲	2	24196	(000000-)	Screw, Pan, Phl, M5 X 0.80 X 20, Ss	2
▲	3	19066	(000000-)	Washer, Flat, 10	2
▲	4	09739	(000000-)	Nut, Hex, Lock, M5 X 0.80, Nl, Ss	2
▲	5	1019647	(000000-)	Harness, Warning / Ohg [M20]	1
▲	6	10632- 17	(000000-)	Grommet, Rbr, 0.50id, F/0.8h, .12 Matl	4
▲	7	763115	(000000-)	Tie, Cable, 6.0l, 1.25d Max	4
▲	8	49266	(000000-)	Tie, Cable, Nyl, 07.3l .19w 1.8 Max D	2
▲		1027800	(000000-)	Lens, Blu, F/ Strobe / Flasher	1
▲		1027798	(000000-)	Lens, Red, F/ Strobe / Flasher	1

Fig. 22 - Light Kit, Strobe Overhead Guard

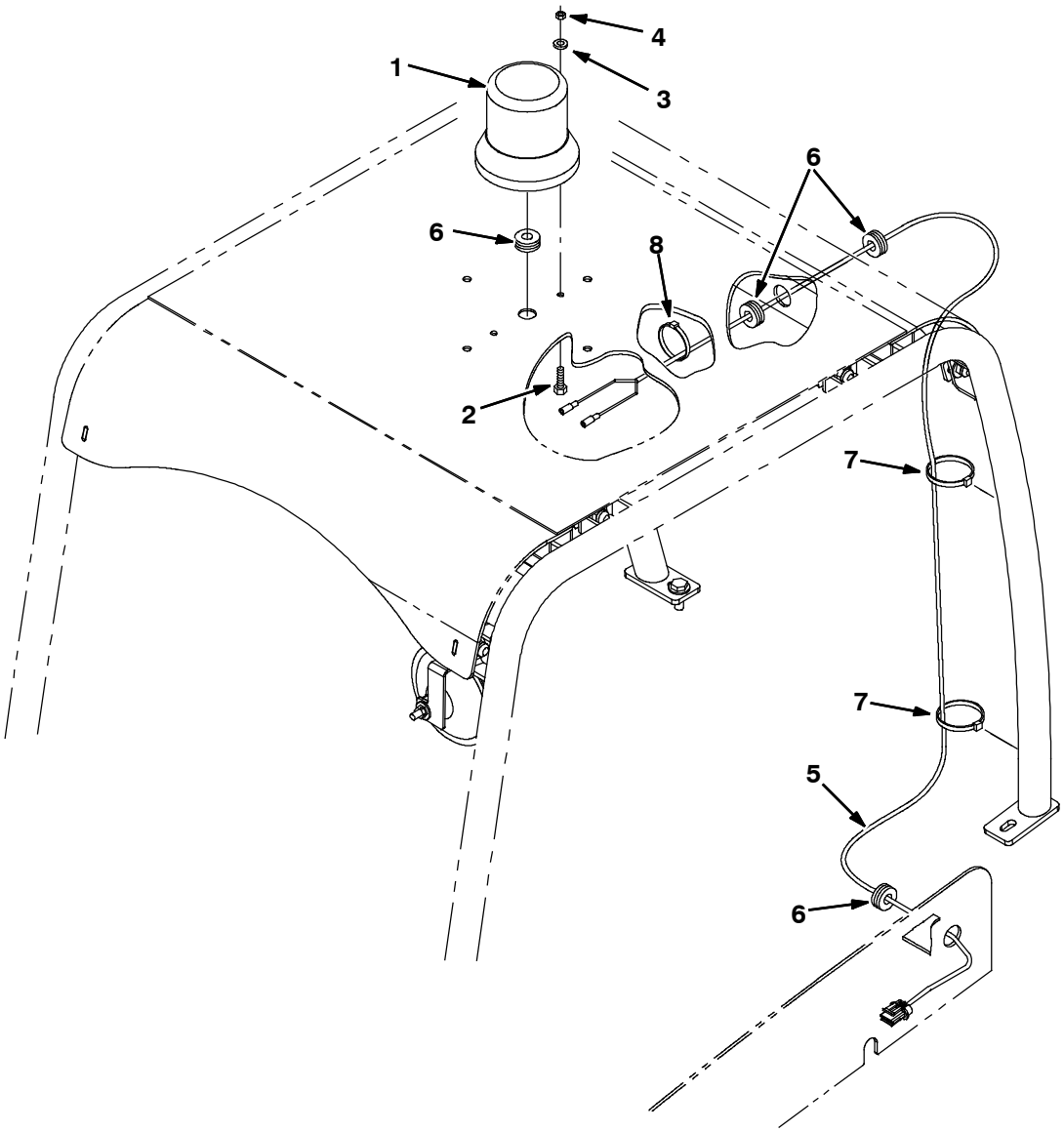

354477

	Ref.	Part No.	Serial Number	Description	Qty.
▽		9001717	(000000-)	Light Kit, Strobe, W/ Ohg, Ci[M20/T20/M30]	1
▲▽	1	1017250	(000000-)	Light, Strobe, Amb, 12- 48vdc	1
▲▲		9000879	(000000-)	Lens, Amb, F/ Strobe / Flasher	1
▲▲		9000845	(000000-)	Lamp, Bulb, Strobe	1
▲		55272	(000000-)	Terminal, Bullet, Mal, .157d, 12ga	2
▲	2	24196	(000000-)	Screw, Pan, Phl, M5 X 0.80 X 20, Ss	2
▲	3	19066	(000000-)	Washer, Flat, 10	2
▲	4	09739	(000000-)	Nut, Hex, Lock, M5 X 0.80, Nl, Ss	2
▲	5	1019647	(000000-)	Harness, Warning / Ohg [M20]	1
▲	6	10632- 17	(000000-)	Grommet, Rbr, 0.50id, F/0.8h, .12 Matl	4
▲	7	763115	(000000-)	Tie, Cable, 6.0l, 1.25d Max	4
▲	8	49266	(000000-)	Tie, Cable, Nyl, 07.3l .19w 1.8 Max D	2
▲		1027800	(000000-)	Lens, Blu, F/ Strobe / Flasher	1
▲		1027798	(000000-)	Lens, Red, F/ Strobe / Flasher	1

Fig. 23 - Overhead Guard Kit

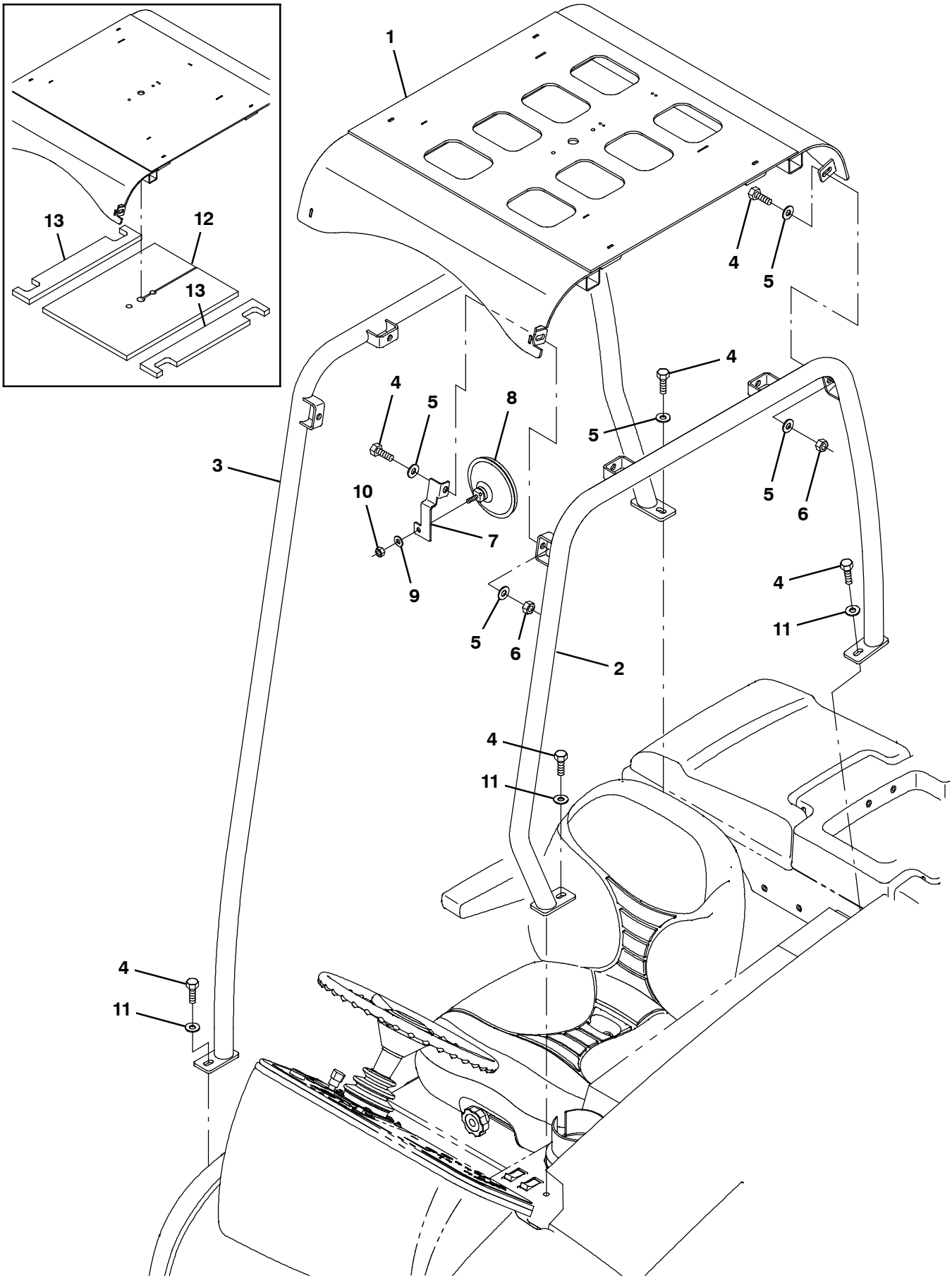

354478

Fig. 23 - Overhead Guard Kit

	Ref.	Part No.	Serial Number	Description	Qty.
▽		9001314	(000000-)	Ohg Kit, Ci [M20 And T20]	1
▲	1	1022276	(000000-)	Guard Wldt, Top, Ohg	1
▲	2	1069241	(000000-)	Tube Wldt, Leg, Ohg, Lh, Pntd	1
▲	3	1069253	(000000-)	Tube Wldt, Leg, Ohg, Rh, Pntd	1
▲	4	03192	(000000-)	Screw, Hex, M10 X 1.5 X 30, 8.8	12
▲	5	32492	(000000-)	Washer, Flat, 0.38 Std	17
▲	6	41430	(000000-)	Nut, Hex, Lock, M10 X 1.5, Nl	8
▲	7	1023879	(000000-)	Bracket, Mtg, Mirror, Rearview	1
▲	8	1050295	(000000-)	Mirror, Convex, 0.50D	1
▲	9	32491	(000000-)	Washer, Flat, 0.31, Std	1
▲	10	19313	(000000-)	Nut, Hex, Std, .31-18	1
▲	11	1014563	(000000-)	Washer, Flat, 0.40b 1.12d .12, Ss	3
	12	1032830	(000000-004475)	Insulation	1
	13	1032831	(000000-004475)	Insulation	2

Fig. 24 - Telemetry Group

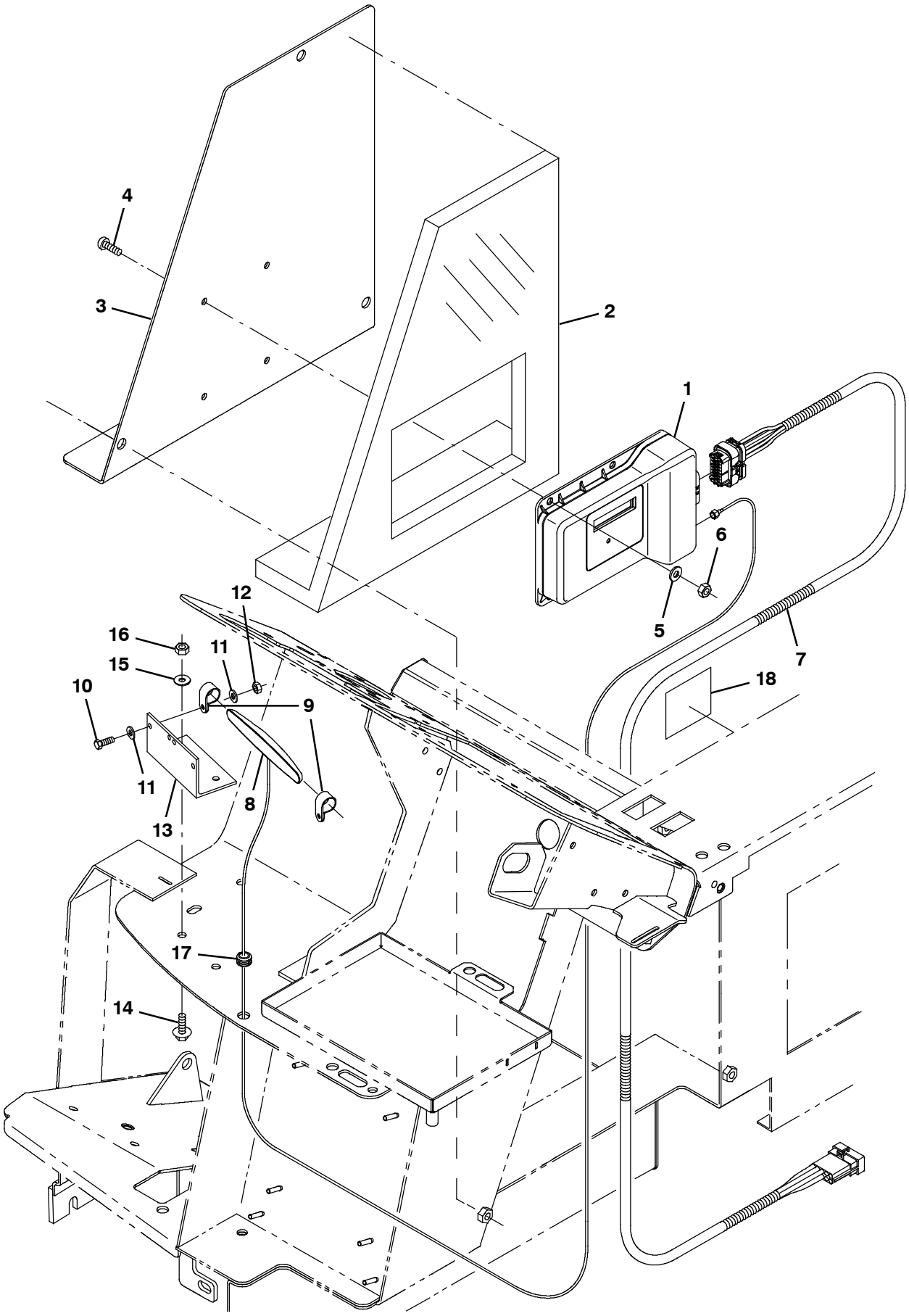

356267

Fig. 24 - Telemetry Group

Ref.	Part No.	Serial Number	Description	Qty.
1	9010085	(000000-)	Control Box Assy Kit, Replmt, Telem[Usa]	1
1	9010086	(000000-)	Control Box Assy Kit, Replmt, Telem[Can]	1
2	1069761	(000000-)	Insulation, Flame- Retardant, 0.75- 0.88	1
3	1069755	(000000-)	Panel, Access, Door	1
4	763147	(000000-)	Screw, Btn, M6 X 1.0 X 20, 10.9, Blk	4
5	32483	(000000-)	Washer, Flat, 0.25, Sae	4
6	08708	(000000-)	Nut, Hex, Lock, M6 X 1.00, Nl	4
7	1069662	(000000-)	Harness, Extn, Telem [M30]	1
8	1070324	(000000-)	Antenna, Telem, 110 In [Gprs]	1
9	140916	(000000-)	Clamp, Cable, Nyl, 0.62d, Nat	2
10	24199	(000000-)	Screw, Hex, M5 X 0.80 X 16, Ss	2
11	01683	(000000-)	Washer, Flat, 10, Ss	4
12	06549	(000000-)	Nut, Hex, Lock, M5 X 0.80, Nl	2
13	1070402	(000000-)	Angle, Mtg, Antenna, Telem	1
14	1040467	(000000-)	Screw, Hex, M6 X 1.00 X 20, 9.8, Sems	2
15	01684	(000000-)	Washer, Flat, 0.27b 0.69d .05, Ss	2
16	08712	(000000-)	Nut, Hex, Lock, M6 X 1.00, Nl, Ss	2
17	10632- 12	(000000-)	Grommet, Rbr, 0.38id, F/0.5h, .12 Matl	1
18	1069580	(000000-)	Label, Machine, Telem [Fcc, Usa, 2g/3g]	1

Fig. 25 - Vacuum Wand Kit

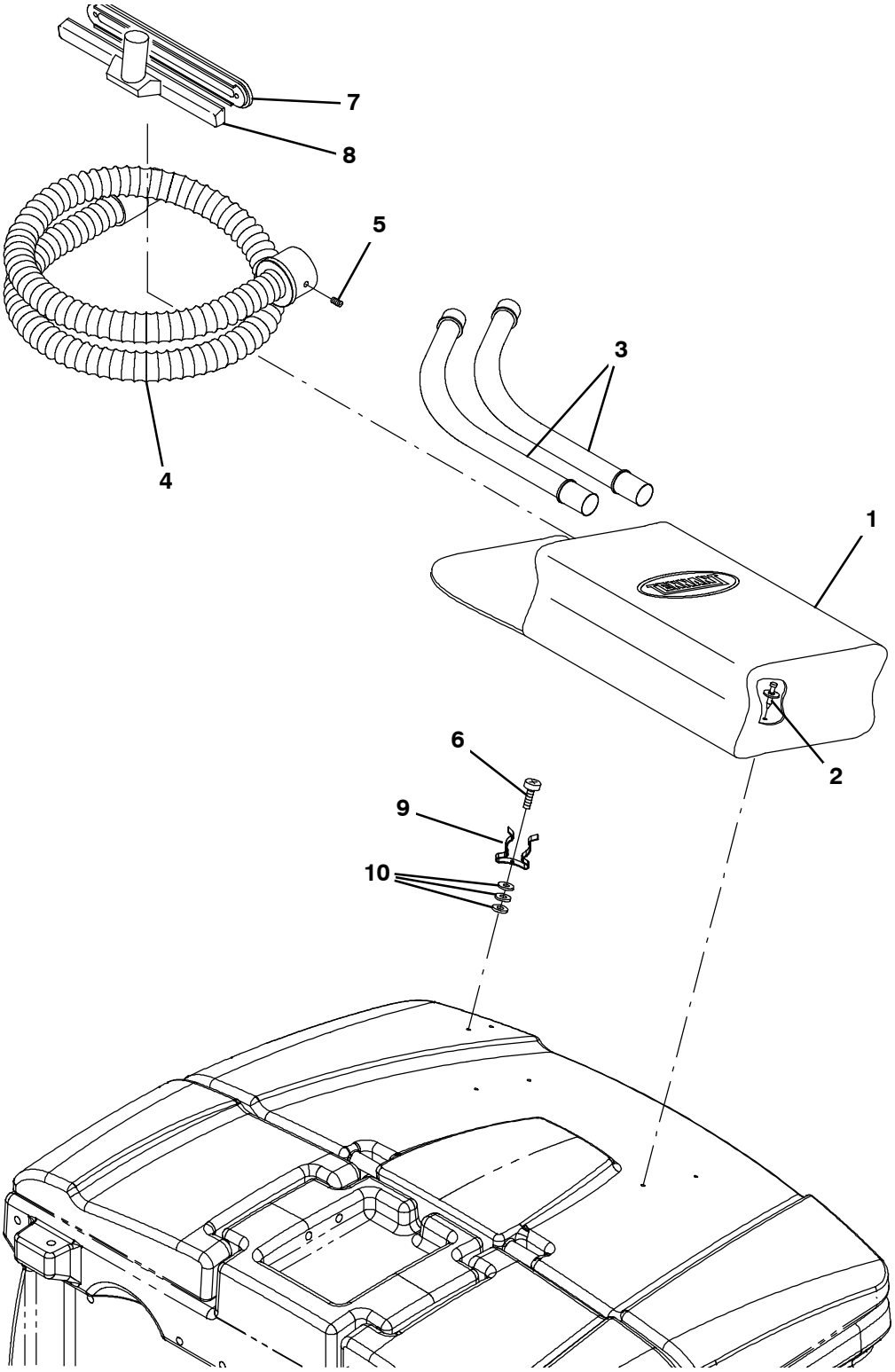

354659

Fig. 25 - Vacuum Wand Kit

	Ref.	Part No.	Serial Number	Description	Qty.
▽		9004071	(000000-)	Wand Kit, Vacuum, Sqge, Ci [M30]	1
▲	1	65580	(000000-)	Bag, Power	1
▲	2	72968	(000000-)	Rivet, Plstc, .250d X 0.90	4
▲	3	63448	(000000-)	Tube, Wand, Vacuum, Metal	1
▲	4	69657	(000000-)	Hose Assy, W/2cuff, 1.5d 084l [Vacwand]	1
▲	5	69659	(000000-)	Plunger	1
▲	6	55845	(000000-)	Screw, Hex, M5 X 0.80 X 16, Fmg	2
▲	7	63430	(000000-)	Shoe, Plstc, Sqge, 14.0	1
▲	8	63451	(000000-)	Nozzle, Wand, Plstc, 14.0l	1
▲	9	67004	(000000-)	Clip, Grip, Finger, 1.00- 1.88d White,Vyl	2
▲	10	19064	(000000-)	Washer, Flat, 06	6

Fig. 26 - Spray Nozzle Kit

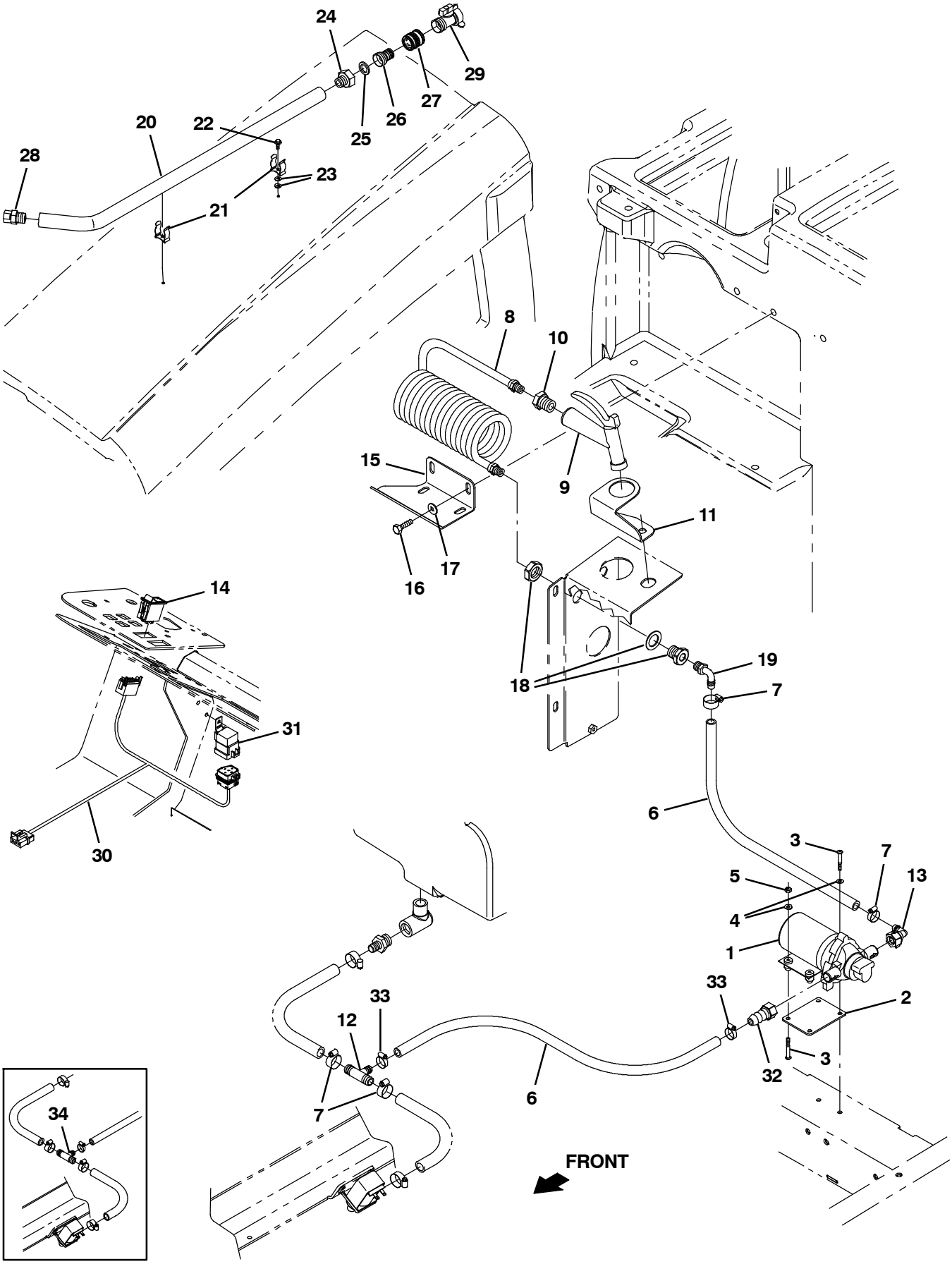

354480

Fig. 26 - Spray Nozzle Kit

	Ref.	Part No.	Serial Number	Description	Qty.
▽		9004031	(000000-)	Nozzle Kit, Spray, Ci [M30]	1
▲	1	1026743	(000000-)	Pump, Diaphragm (See Breakdowns)	1
▲	2	1027007	(000000-)	Plate, Mtg, Pump	1
▲	3	06939	(000000-)	Screw, Pan, Phl, M5 X 0.80 X 45, 4.8	4
▲	4	19066	(000000-)	Washer, Flat, 10	4
▲	5	06549	(000000-)	Nut, Hex, Lock, M5 X 0.80, Nl	2
▲	6	1011412	(000000-)	Hose, Afmkt, Pvc, Brd, 0.50Id, 08Ft, Clr	1
▲	7	63810	(000000-)	Clamp, Hose, Wormdrive, 0.56- 1.06d, .56w	4
▲	8	1019250	(000000-)	Hose, Water, Coil, 0.38id 0.56od	1
▲	9	769785	(000000-)	Nozzle, Spray, Gun	1
▲	10	1027976	(000000-)	Fitting, Brs, Str, Pf06/Pm12	1
▲	11	1027237	(000000-)	Bracket, Mtg, Spray Handle	1
▲	12	1015486	(004691-)	Fitting, Plstc, Tee, Bm08/Bm10/Bm10, Br	1
▲	13	1018499	(000000-)	Fitting, Plstc, E90, Bm08/Pf08s, Swivel	1
▲	14	398500	(000000-)	Switch, Rocker, Dpdt, On / None / On	1
▲	15	1029790	(000000-)	Bracket, Mtg, Spray Wand [FaST, Conv]	1
▲	16	09740	(000000-)	Screw, Hex, M8 X 1.25 X 20, Ss	2
▲	17	1017218	(000000-)	Washer, Flat, 0.32b 1.00d .12, Ss	2
▲	18	1027978	(000000-)	Fitting, Brs, Str, Pf06/Pf06 Bh	1
▲	19	64778	(000000-)	Fitting, Plstc, E90, Bm08/Pm06	1
▲	20	1029055	(000000-)	Wand, Clean- Out	1
▲	21	1029057	(000000-)	Clip, Grip, Finger, .875- 1.25	2
▲	22	20394	(000000-)	Screw, Hex, 10- 16 X 0.62, Fmg/Ab, Pl	2
▲	23	01683	(000000-)	Washer, Flat, 10, Ss	4
▲	24	375321	(000000-)	Fitting, Brs, Str, Pm08/Garden Hose	1
▲	25	01316	(000000-)	Washer, Flat, 0.66b 1.00d .12, Rbr	1
▲	26	1029153	(000000-)	Fitting, Brs, Spcl [Garden Hose]	1
▲	27	1029155	(000000-)	Coupling, Nozzle, Spray	1
▲	28	1029156	(000000-)	Nozzle	1
▲	29	1029399	(000000-)	Valve, Shutoff	1
▲	30	1021881	(000000-)	Harness, Spray, Nozzle	1
▲	31	56186	(000000-)	Relay, 12vdc, 040a, Spdt No	1
▲	32	1018495	(000000-)	Fitting, Plstc, Str, Bm08/Pf08s, Swivel	1
▲	33	54333	(000000-)	Clamp, Hose, Wormdrive, 0.31- 0.88d, .31w	2
	34	385644	(000000- 004690)	Fitting, Plstc, Tee, Bm08/Bm12/Bm12, Br	1

Fig. 27 - Pressure Washer Mount Group

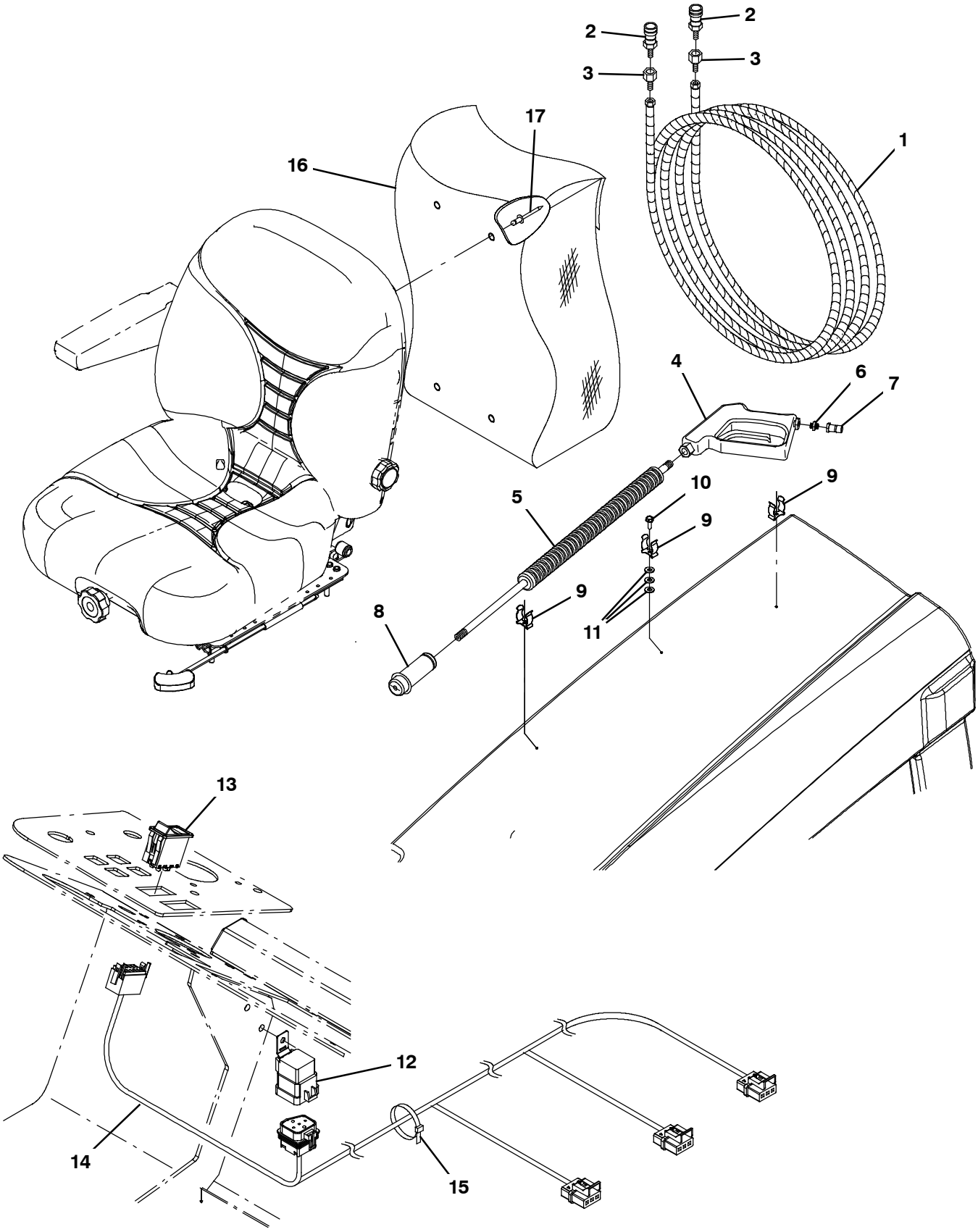

354672

Fig. 27 - Pressure Washer Mount Group

Ref.	Part No.	Serial Number	Description	Qty.
1	1039056	(000000-)	Hose, Rbr, 25ft	1
2	1042051	(000000-)	Fitting, Ss, Qdc, Fem	2
3	1042772	(000000-)	Fitting, Brs, Str, Pf06/Pm04	2
4	1039042	(000000-)	Handle, Gun, Trigger	1
5	1039044	(000000-)	Wand, Str, Ss, 28l	1
6	1044428	(000000-)	Fitting, Brs, Str, Pm04/Pm06 [Hp]	1
7	1042191	(000000-)	Fitting, Ss, Qdc, Mal	1
8	1041935	(000000-)	Nozzle, Spray [Pressure Washer]	1
9	67004	(000000-)	Clip, Grip, Finger, 1.00- 1.88d White,Vyl	3
10	20394	(000000-)	Screw, Hex, 10- 16 X 0.62, Fmg/Ab, Pl	3
11	01683	(000000-)	Washer, Flat, 10, Ss	12
12	56186	(000000-)	Relay, 12vdc, 040a, Spdt No	1
13	1040899	(000000-)	Switch, Rocker, Prgrsv	1
14	1040898	(000000-)	Harness, Press Wash [M30]	1
15	49266	(000000-)	Tie, Cable, Nyl, 07.3l .19w 1.8 Max D	5
16	65580	(000000-)	Bag, Power	1
17	72968	(000000-)	Rivet, Plstc, .250D X 0.90	2

Fig. 28 - Pressure Washer Solution Group

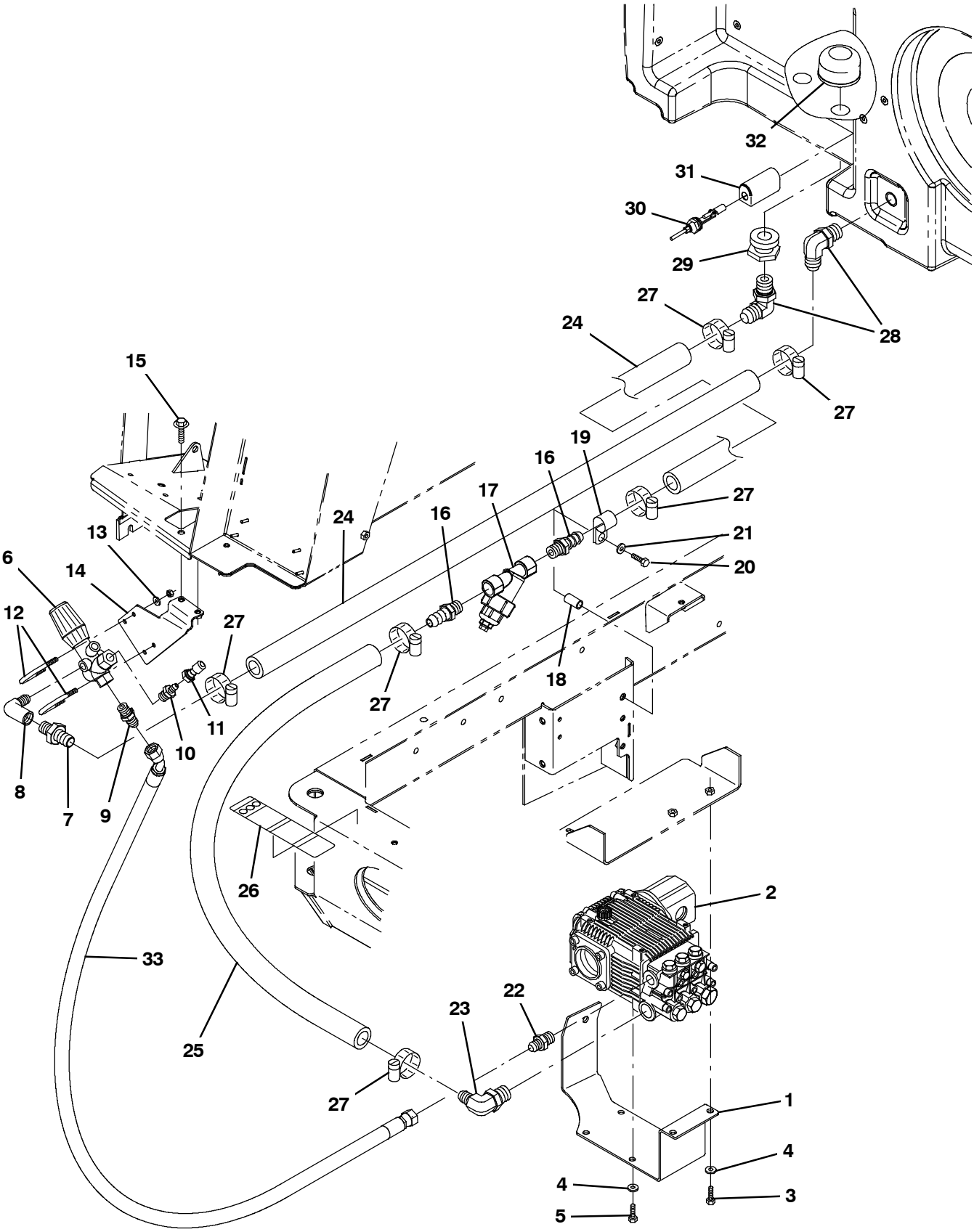

354673

Fig. 28 - Pressure Washer Solution Group

Ref.	Part No.	Serial Number	Description	Qty.
1	1037634	(000000-)	Bracket, Mtg, Motor	1
2	1038855	(000000-)	Pump, Hyd, Press Washer (See Breakdowns)	1
3	09010	(000000-)	Screw, Hex, M8 X 1.25 X 25, Ss	3
4	01685	(000000-)	Washer, Flat, 0.38b 0.88d .08, Ss	7
5	15675	(000000-)	Screw, Hex, M8 X 1.25 X 16, Ss	4
6	1039046	(000000-)	Valve, Needle	1
7	1042859	(000000-)	Fitting, Brs, Str, Bm12/Pm08	1
8	1042579	(000000-)	Fitting, Brs, E90, Pf08/Pm06	1
9	1044429	(000000-)	Fitting, Brs, Str, Pm06/Pm08 [Hp]	1
10	1044428	(000000-)	Fitting, Brs, Str, Pm04/Pm06 [Hp]	1
11	1042191	(000000-)	Fitting, Ss, Qdc, Mal	1
12	45142	(000000-)	Bolt, U, .25- 20 X 2.00, 1.10id	2
13	07515	(000000-)	Washer, Lock, Int, 0.25, Ss	4
14	1040709	(000000-)	Bracket, Mtg, Needle	1
15	1037346	(000000-)	Screw, Hex, M8 X 1.25 X 25, 9.8, Sems	2
16	377334	(000000-)	Fitting, Brs, Str, Bm12/Pm12	2
17	1039037	(000000-)	Filter, Y, Inline, .75	1
18	1039348	(000000-)	Sleeve, 0.49b 0.68d 1.2l [304ss]	1
19	53466	(000000-)	Clamp, Cable, Stl, 1.50d X 1.00w, 1hole	1
20	32731	(000000-)	Screw, Hex, M10 X 1.50 X 50, Ss	1
21	01686	(000000-)	Washer, Flat, 0.44b 1.00d .08, Ss	1
22	1044429	(000000-)	Fitting, Brs, Str, Pm06/Pm08 [Hp]	1
23	48697	(000000-)	Fitting, Brs, E90, Em12/Pm08	1
24	1045034	(000000-)	Hose, Afmkt, Pvc, Wir, 0.75id, 08ft, Clr	1
25	1045045	(000000-)	Hose, Afmkt, Pvc, Wir, 0.75id, 02ft, Clr	1
26	1041952	(000000-)	Label Set, Info/Hzrd, Press Wash	1
27	63810	(000000-)	Clamp, Hose, Wormdrive, 0.56- 1.06d, .56w	6
28	1041351	(000000-)	Fitting, Brs, E90, Bm12/Pm12	2
29	377349	(000000-)	Fitting, Plstc, Pf12/Pf12, Bh	1
30	385685	(000000-)	Sensor, Level, Liq, 14vdc 01a .62- 11	1
31	1019285	(000000-)	Bracket, Protector, Float Switch	1
32	1027290	(000000-)	Filter, Soltn, 20mesh, Pm12 3.1d 02.6l	1
33	1041391	(000000-)	Hose, Hyd, Tc08, Jf08E45/JF08Str, 18.0	1

Fig. 29 - Pressure Washer Hydraulic Hoses Group (000000-003999)

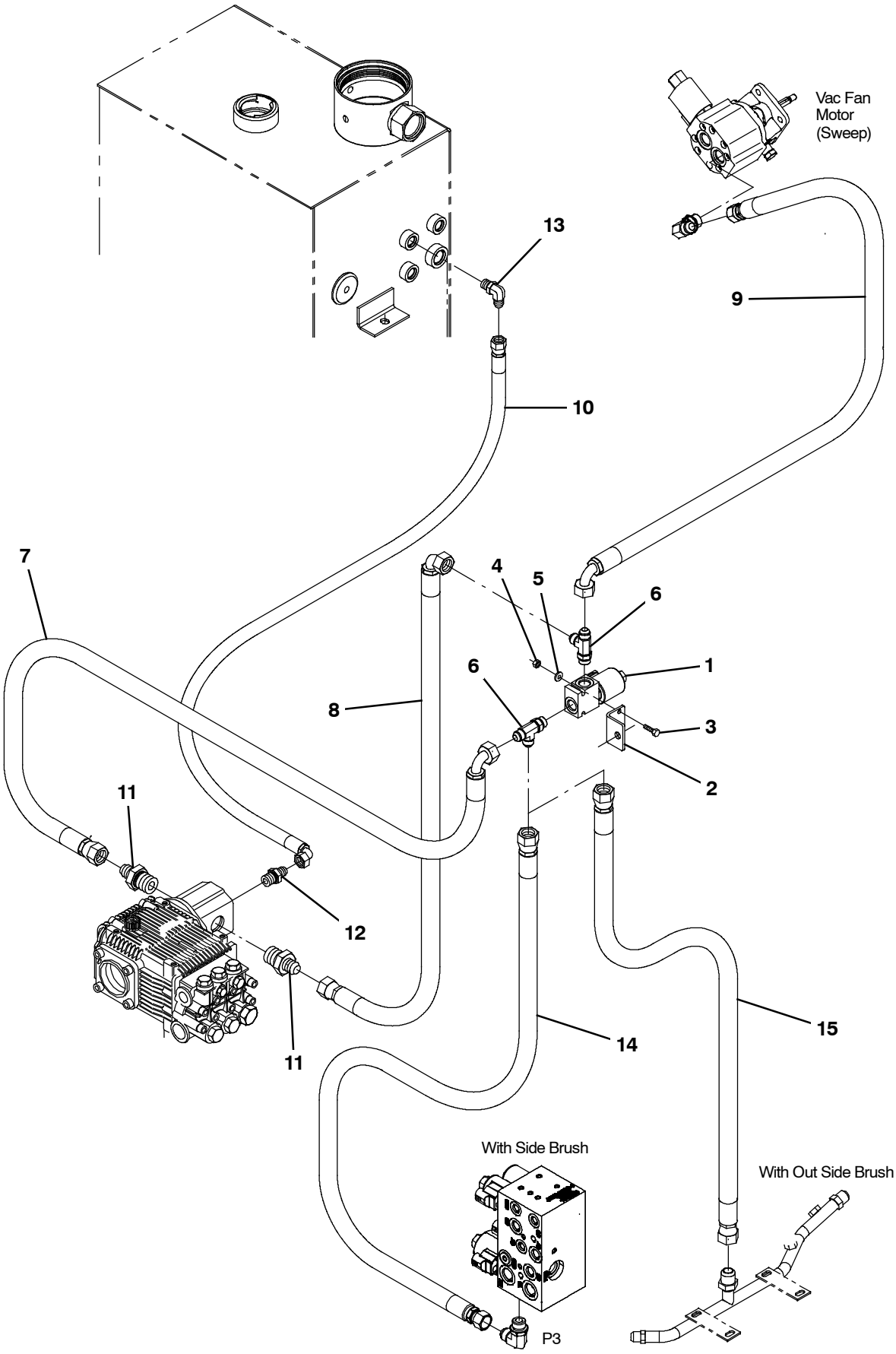

354674

Fig. 29 - Pressure Washer Hydraulic Hoses Group (000000-003999)

Ref.	Part No.	Serial Number	Description	Qty.
1	1038571	(000000-003999)	Valve, Hyd, Press Washer	1
2	1040512	(000000-003999)	Bracket, Mtg	1
3	06948	(000000-003999)	Screw, Hex, M6 X 1.00 X 60, 8.8	2
4	08708	(000000-003999)	Nut, Hex, Lock, M6 X 1.00, Nl	2
5	32483	(000000-003999)	Washer, Flat, 0.25, Sae	2
6	40755	(000000-003999)	Fitting, Hyd, Tee, Jm08/Jm08/Om08, Run	2
7	71741	(000000-003999)	Hose, Hyd, Tc08, Jf08e90/Jf08str, 046.0	1
8	1040216	(000000-003999)	Hose, Hyd, Tc08, Jf08e90/Jf08str, 029.0	1
9	381858	(000000-003999)	Hose, Hyd, Tc08, Jf08e90/Jf08str, 024.0	1
10	1040630	(000000-003999)	Hose, Hyd, Med04, Jf04e90/Jf04str, 022.0	1
11	42227	(000000-003999)	Fitting, Hyd, Str, Jm08/Om12	2
12	55685	(000000-003999)	Fitting, Hyd, Str, Jm04/Om06	1
13	47638	(000000-003999)	Fitting, Hyd, E90, Jm04/Om06	1
14	1036902	(000000-003999)	Hose, Hyd, Tc08, Jf08str/Jf08str, 039.0	1
15	361037	(000000-003999)	Hose, Hyd, Tc08, Jf08str/Jf08str, 027.0	1

Fig. 30 - Pressure Washer Hydraulic Hoses Group (004000-)

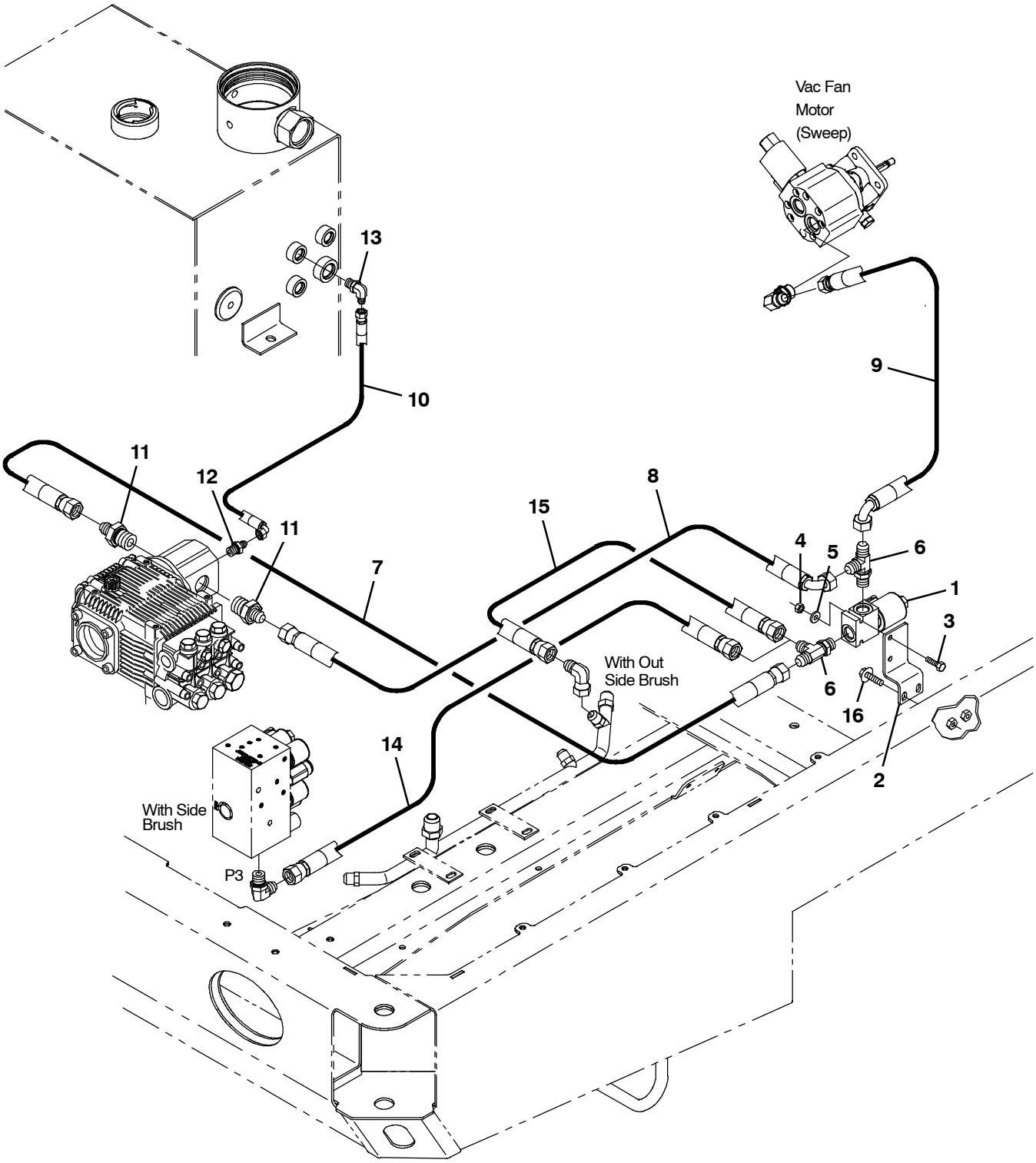

354674

Fig. 30 - Pressure Washer Hydraulic Hoses Group (004000-)

Ref.	Part No.	Serial Number	Description	Qty.
1	1038571	(004000-)	Valve, Hyd, Press Washer	1
2	1071852	(004000-)	Bracket, Mtg	1
3	06948	(004000-)	Screw, Hex, M6 X 1.00 X 60, 8.8	2
4	08708	(004000-)	Nut, Hex, Lock, M6 X 1.00, Nl	2
5	32483	(004000-)	Washer, Flat, 0.25, Sae	2
6	40755	(004000-)	Fitting, Hyd, Tee, Jm08/Jm08/Om08, Run	2
7	365007	(004000-)	Hose, Hyd, Tc08, Jf08str/Jf08str, 072.0	1
8	396209	(004000-)	Hose, Hyd, Tc08, Jf08e90/Jf08str, 054.0	1
9	1039753	(004000-)	Hose, Hyd, Tc08, Jf08e90/Jf08str, 042.0	1
10	1040630	(004000-)	Hose, Hyd, Med04, Jf04e90/Jf04str, 022.0	1
11	42227	(004000-)	Fitting, Hyd, Str, Jm08/Om12	2
12	55685	(004000-)	Fitting, Hyd, Str, Jm04/Om06	1
13	47638	(004000-)	Fitting, Hyd, E90, Jm04/Om06	1
14	1037072	(004000-)	Hose, Hyd, Tc08, Jf08str/Jf08str, 052.0	1
15	1036902	(004000-)	Hose, Hyd, Tc08, Jf08str/Jf08str, 039.0	1
16	1037354	(004000-)	Screw, Hex, M8 X 1.25 X 30, 9.8, Sems	2

Fig. 31 - Transport Kit

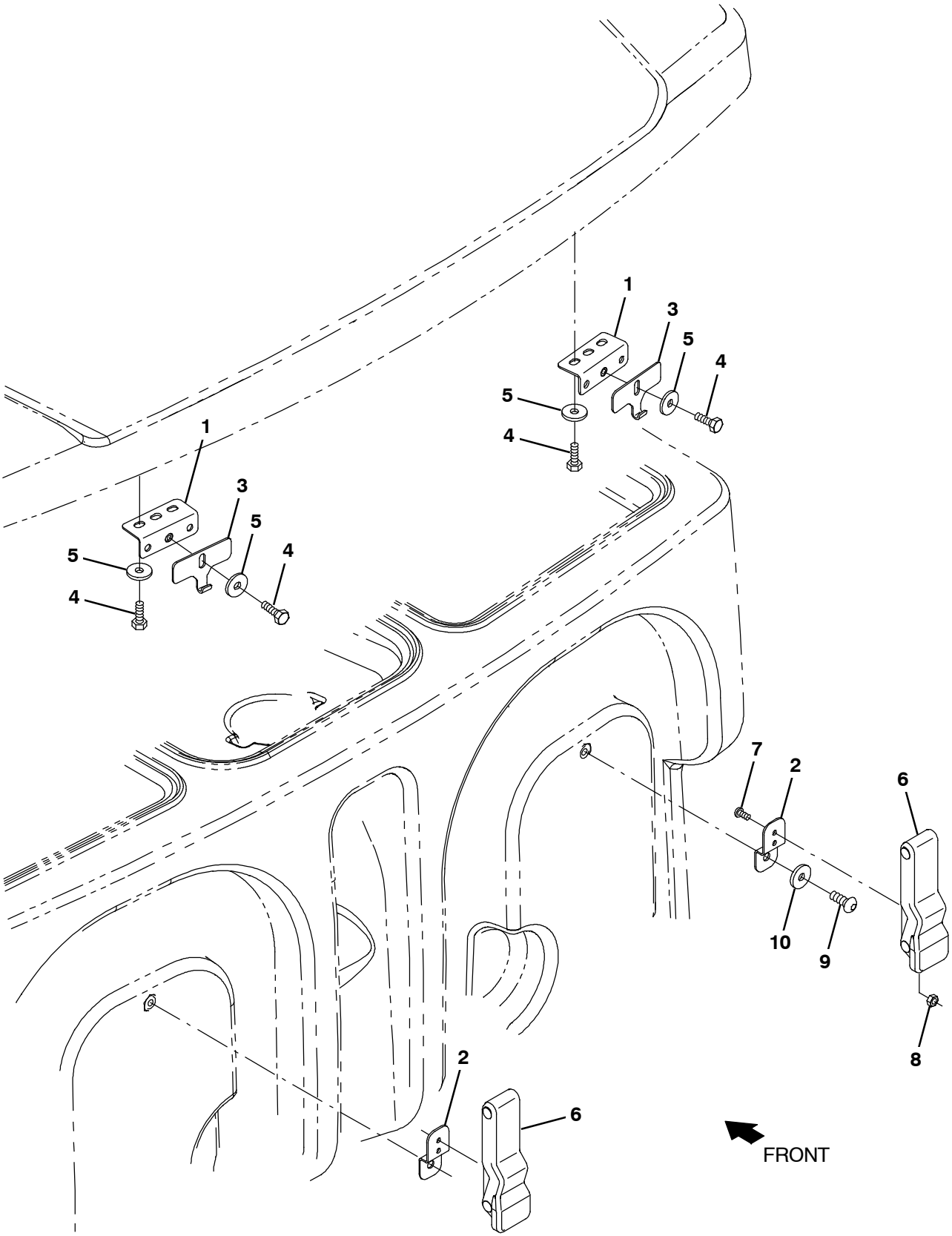

354481

Fig. 31 - Transport Kit

	Ref.	Part No.	Serial Number	Description	Qty.
▽		9014867	(000000-)	Transport Kit, Ci [M20/M30}	1
▲	1	1040800	(000000-)	Bracket, Latch, Cover	2
▲	2	1020526	(000000-)	Bracket, Retaining, Hose	2
▲	3	1032896	(000000-)	Plate, Hook, Latch, [M20]	2
▲	4	09744	(000000-)	Screw, Hex, M6 X 1.00 X 12, Ss	8
▲	5	01684	(000000-)	Washer, Flat, 0.27b 0.69d .05, Ss	8
▲	6	360824	(000000-)	Latch	2
▲	7	09200	(000000-)	Screw, Pan, Phl, M5 X 0.80 X 12, Ss	4
▲	8	09739	(000000-)	Nut, Hex, Lock, M5 X 0.80, Nl, Ss	4
▲	9	393135	(000000-)	Screw, Btn, M8 X 1.25 X 20, Blk	2
▲	10	32491	(000000-)	Washer, Flat, 0.31, Std	2

Fig. 32 - Squeegee Guard Kit

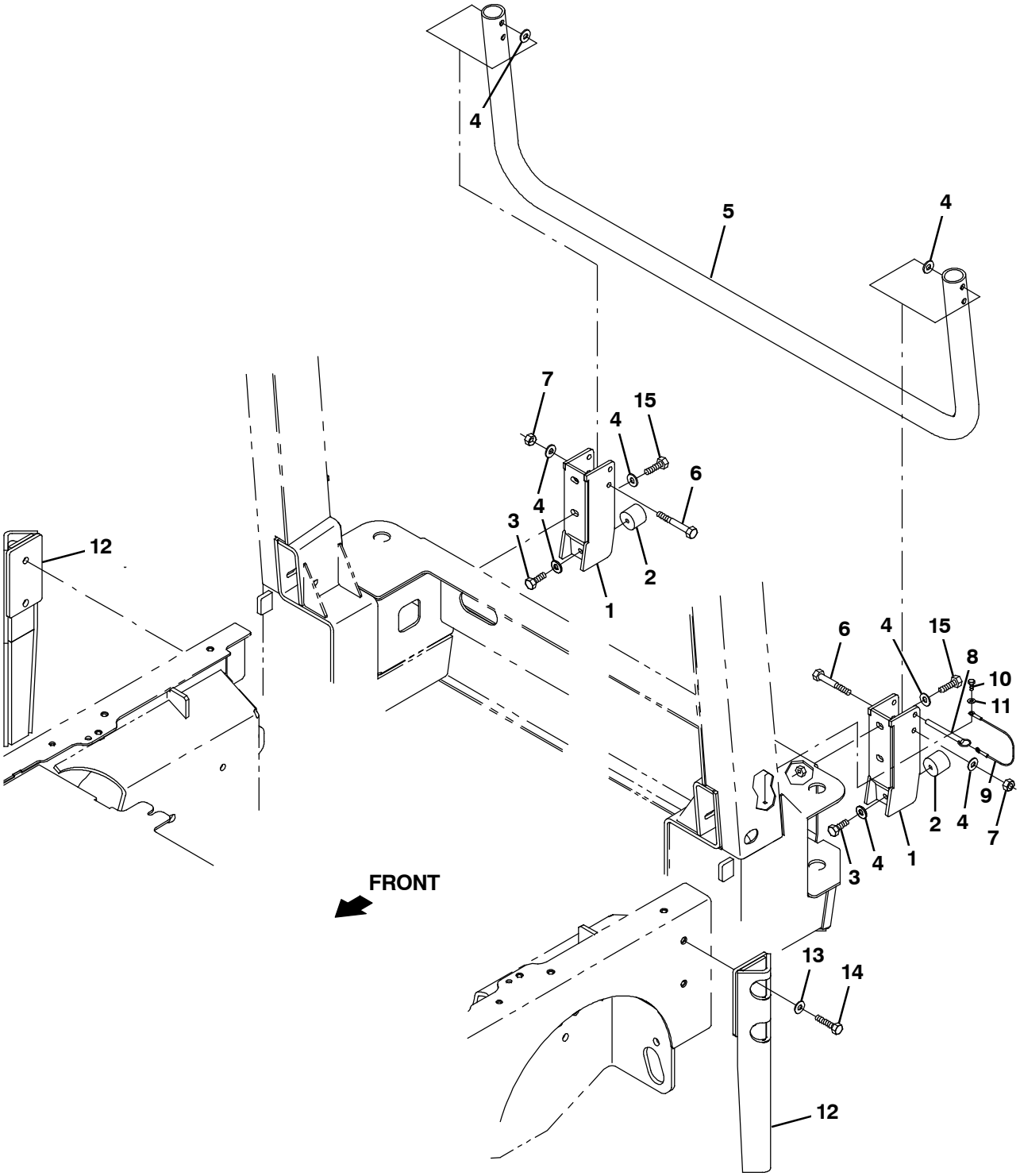

354650

Fig. 32 - Squeegee Guard Kit

	Ref.	Part No.	Serial Number	Description	Qty.
▽		9004029	(000000-)	Guard Kit, Sqge, Ci [M30]	1
▲	1	1027560	(000000-)	Bracket Wldt, Guard, Sqge	2
▲	2	1024977	(000000-)	Bumper, Ure, 1.50d 1.25l	2
▲	3	21196	(000000-)	Screw, Hex, .38- 16 X 0.88, G5	2
▲	4	32492	(000000-)	Washer, Flat, 0.38, Std	10
▲	5	1056191	(000000-)	Guard Wldt, Sqge, Pntd [M30]	1
▲	6	06965	(000000-)	Screw, Hex, M10 X 1.50 X 80, 8.8	2
▲	7	41430	(000000-)	Nut, Hex, Lock, M10 X 1.5, Nl	2
▲	8	369359	(000000-)	Pin, Hitch, .375d X 3.12l, Pl	1
▲	9	57702	(000000-)	Cable, Glv .06d 012.0l .26eye /.26eye	1
▲	10	09738	(000000-)	Screw, Hex, M5 X 0.80 X 12, Ss	1
▲	11	01683	(000000-)	Washer, Flat, 10, Ss	1
▲	12	1045444	(000000-)	Guard Wldt, Sqge	2
▲	13	32486	(000000-)	Washer, Flat, 0.50, Sae	2
▲	14	368176	(000000-)	Screw, Hex, M10 X 1.50 X 35, 10.9	4
▲	15	39284	(000000-)	Screw, Hex, M10 X 1.50 X 35, 8.8	4

Fig. 33 - Engine Radiator Screen Kit (001250-003999)

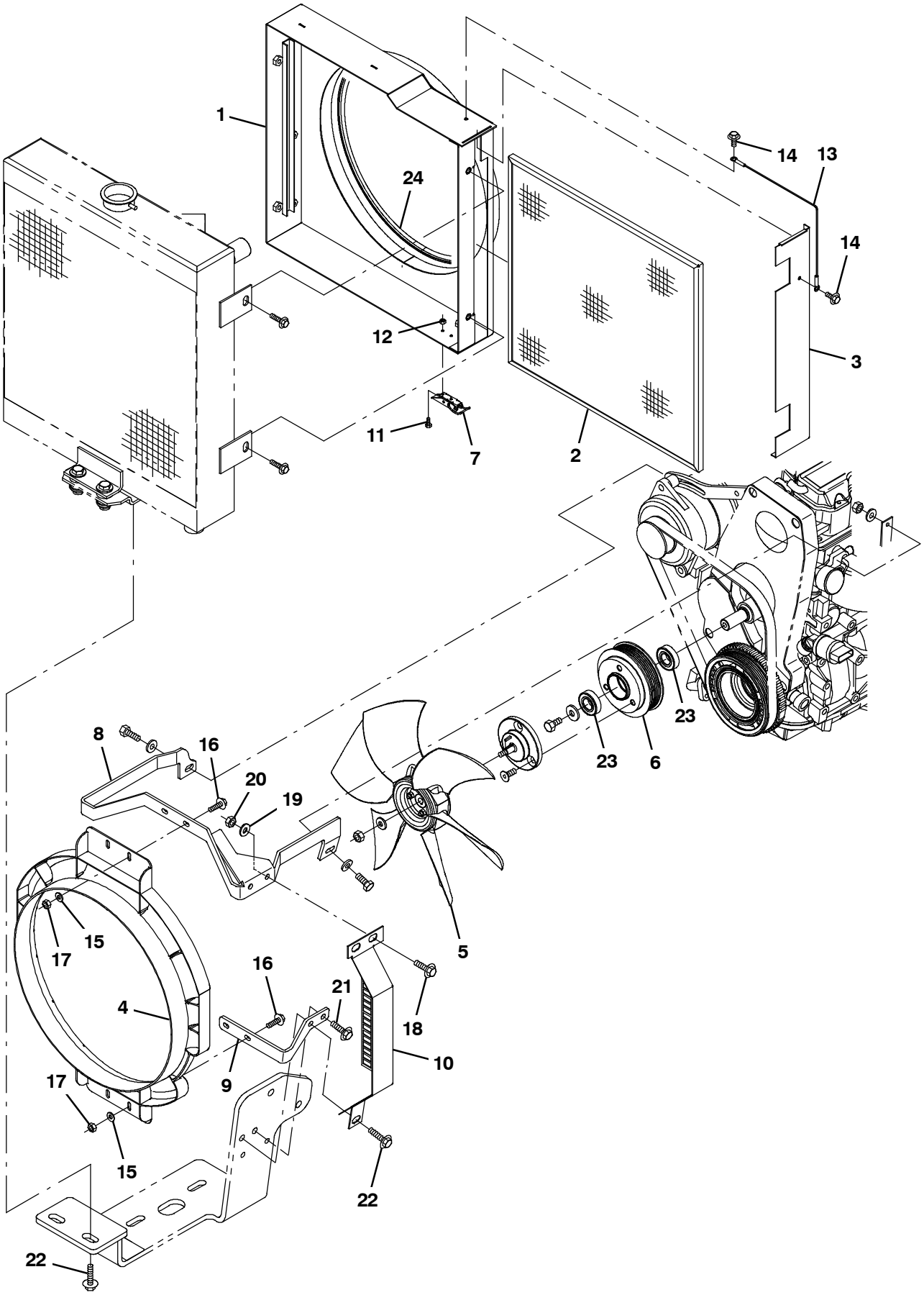

356399 - CE

Fig. 33 - Engine Radiator Screen Kit (001250-003999)

	Ref.	Part No.	Serial Number	Description	Qty.
▽		9010988	(001250-003999)	Rad Screen Kit, Replmt [M/T20,M30 G/Lp]	1
▲	1	1071041	(001250-003999)	Bracket Wldt, Radiator, Fan, Gas/Lpg	1
▲	2	1071033	(001250-003999)	Frame Wldt, Screen, Rad	1
▲	3	1071047	(001250-003999)	Plate, Cover, Screen	1
▲	4	1054428	(001250-003999)	Shroud, Fan	1
▲	5	1031566	(001250-003999)	Fan, Cooling, 14.1d, 6 Blade, 0.5b Taper	1
▲	6	1072505	(001250-003999)	Sheave, Mach [Gm1.6l 2615rpm Fan]	1
▲	7	1051534	(001250-003999)	Concept, Latch	1
▲	8	1058777	(001250-003999)	Bracket, Shrd, Fan, Upper, Sppt, Gas/Lpg	1
▲	9	1058753	(001250-003999)	Bracket, Shrd, Fan, Lower, Gas/Lpg	1
▲	10	1064443	(001250-003999)	Bracket, Shrd, Radiator, Gas/Lpg, Ce	1
▲	11	1020234	(001250-003999)	Screw, Hex, M4 X 0.70 X 10, Ss	2
▲	12	02850	(001250-003999)	Nut, Hex, Lock, M4 X 0.70, Nl	2
▲	13	57702	(001250-003999)	Cable, Glv .06d 012.0l .26eye /.26eye	1
▲	14	361339	(001250-003999)	Screw, Hex, M6 X 1.00 X 16, Fmg	2
▲	15	32483	(001250-003999)	Washer, Flat, 0.25, Sae	6
▲	16	1036892	(001250-003999)	Screw, Hex, M6 X 1.00 X 25, 9.8, Sems	4
▲	17	08708	(001250-003999)	Nut, Hex, Lock, M6 X 1.00, Nl	4
▲	18	1037346	(001250-003999)	Screw, Hex, M8 X 1.25 X 25, 9.8, Sems	2
▲	19	32491	(001250-003999)	Washer, Flat, 0.31, Std	2
▲	20	08709	(001250-003999)	Nut, Hex, Lock, M8 X 1.25, Nl	2
▲	21	1037354	(001250-003999)	Screw, Hex, M8 X 1.25 X 30, 9.8, Sems	3
▲	22	1037355	(001250-003999)	Screw, Hex, M8 X 1.25 X 35, 9.8, Sems	1
▲	23	1055377	(001250-003999)	Bearing, Ball, 20mm B 42mm D 12mm W	2
▲	24	1048166	(001250-003999)	Seal, Afmkt, Bulb, Str, 0.58d 08ft	1

Fig. 34 - Fire Extinguisher Kit

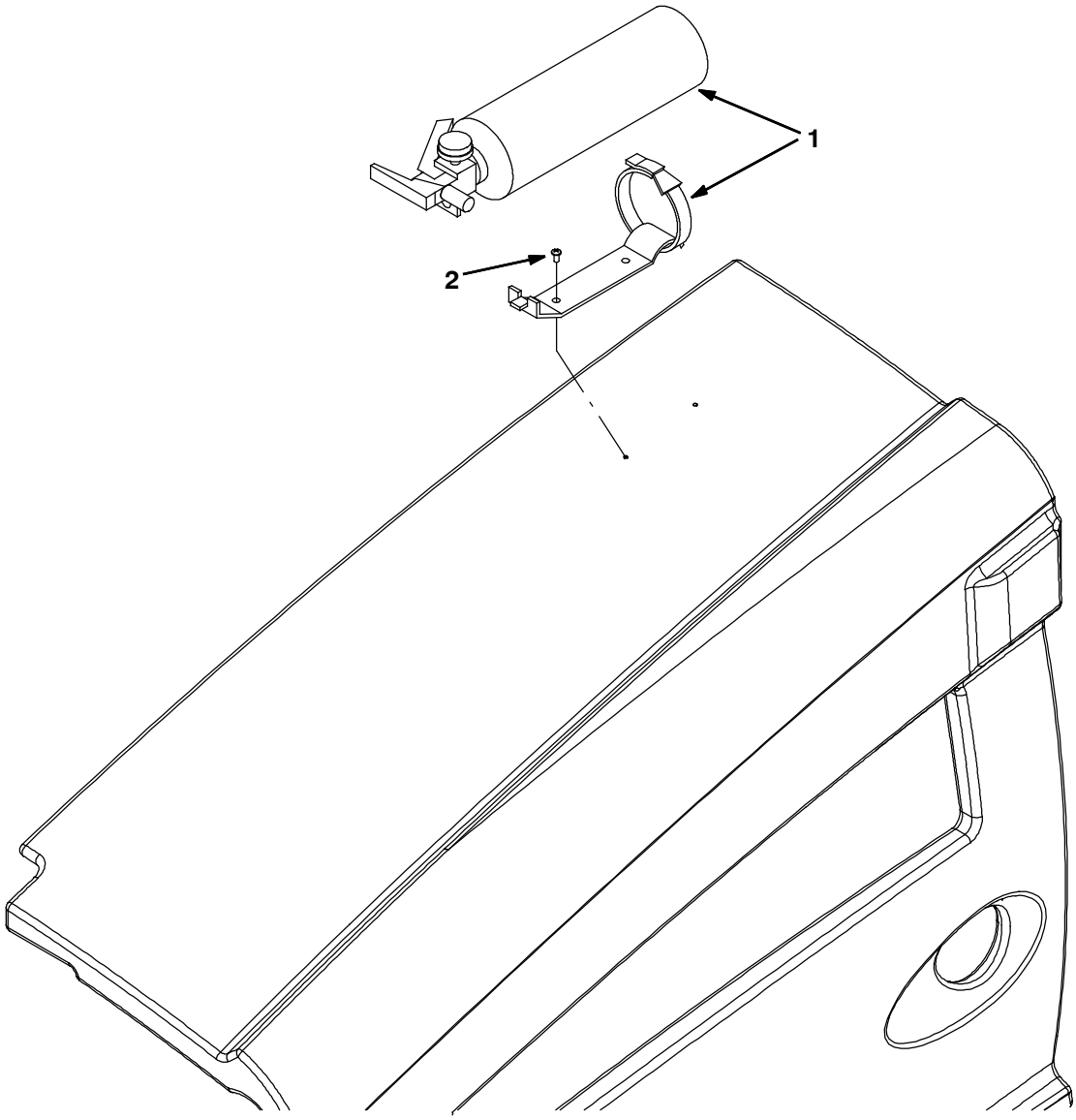

354484

Ref.	Part No.	Serial Number	Description	Qty.
	9001316	(000000-)	Extinguisher Kit, Fire, Ci [M20/T20/M30]	1
1	25312	(000000-)	Extinguisher, Fire, 2.5 Lb Dry	1
2	382320	(000000-)	Screw, Pan, Phl, 12- 16 X 0.50, F/ Plstc	2

Fig. 35 - Documentation Group

Ref.	Part No.	Serial Number	Description	Qty.
	9003943	(000000-)	Manual, Oprtr [M30 Gas/Lpg En]	1
	9003944	(000000-)	Manual, Oprtr [M30 Gas/Lpg Es]	1
	9003945	(000000-)	Manual, Oprtr [M30 Gas/Lpg Fr]	1
	9003946	(000000-)	Manual, Parts [M30 Gas/Lpg En]	1
	9003947	(000000-)	Manual, Service [M30 En]	1
	1042640	(000000-)	Media, Dvd, Oprtr [W/ Checklist M30]	1
	9003926	(000000-)	Manual, Eng, Cd- Rom [Tier II,Gm1.6L]	1
	9004702	(000000-)	Manual, Oprtr [M30 Gas/Lpg, Pt, Br]	1
	9004676	(000000-)	Manual, Oprtr [M30 Gas/Lpg, Jp]	1
	9004677	(000000-)	Manual, Oprtr [M30 Gas/Lpg, Cn]	1
	9004678	(000000-)	Manual, Oprtr [M30 Gas/Lpg, Cz, Ce]	1
	9004679	(000000-)	Manual, Oprtr [M30 Gas/Lpg, De, Ce]	1
	9004680	(000000-)	Manual, Oprtr [M30 Gas/Lpg, Dk, Ce]	1
	9004681	(000000-)	Manual, Oprtr [M30 Gas/Lpg, En, Ce]	1
	9004682	(000000-)	Manual, Oprtr [M30 Gas/Lpg, Es, Ce]	1
	9004683	(000000-)	Manual, Oprtr [M30 Gas/Lpg, Fi, Ce]	1
	9004684	(000000-)	Manual, Oprtr [M30 Gas/Lpg, Fr, Ce]	1
	9004685	(000000-)	Manual, Oprtr [M30 Gas/Lpg, Gr, Ce]	1
	9004686	(000000-)	Manual, Oprtr [M30 Gas/Lpg, Hu, Ce]	1
	9004687	(000000-)	Manual, Oprtr [M30 Gas/Lpg, It, Ce]	1
	9004688	(000000-)	Manual, Oprtr [M30 Gas/Lpg, Nl, Ce]	1
	9004689	(000000-)	Manual, Oprtr [M30 Gas/Lpg, No, Ce]	1
	9004690	(000000-)	Manual, Oprtr [M30 Gas/Lpg, Pl, Ce]	1
	9004691	(000000-)	Manual, Oprtr [M30 Gas/Lpg, Pt, Ce]	1
	9004692	(000000-)	Manual, Oprtr [M30 Gas/Lpg, Ru, Ce]	1
	9004693	(000000-)	Manual, Oprtr [M30 Gas/Lpg, Se, Ce]	1
	9004694	(000000-)	Manual, Oprtr [M30 Gas/Lpg, Tr, Ce]	1
	9004695	(000000-)	Manual, Oprtr [M30 Gas/Lpg, Ee, Ce]	1
	9004696	(000000-)	Manual, Oprtr [M30 Gas/Lpg, Lv, Ce]	1
	9004697	(000000-)	Manual, Oprtr [M30 Gas/Lpg, Lt, Ce]	1
	9004698	(000000-)	Manual, Oprtr [M30 Gas/Lpg, Sk, Ce]	1
	9004699	(000000-)	Manual, Oprtr [M30 Gas/Lpg, Si, Ce]	1
	9004700	(000000-)	Manual, Oprtr [M30 Gas/Lpg, Bg, Ce]	1
	9004701	(000000-)	Manual, Oprtr [M30 Gas/Lpg, Ro, Ce]	1
	9011428	(000000-)	Manual, Oprtr [M30 Gas/Lpg, Hr]	1
	9006257	(000000-)	Media, Cd- Rom, Training [ec- H2O Tennant]	1
	9010635	(000000-)	Manual, Service, Cd- Rom [Mit2.0l]	1

To view, print, order, download the latest Parts manual, other language Operator manuals, and Use and Care Guides (wall charts), visit:

www.tennantco.com/manual

SECTION 4

Contents **Page**

Fig. 1 - Extended Scrub Pump Breakdown, 1021210 4-2
Fig. 2 - Hydraulic Motor Breakdown, 379609 . . . 4-4
Fig. 3 - Hydraulic Pump Breakdown, 1024251 . 4-6
Fig. 4 - Hydraulic Gear Pump Breakdown, 1034448 4-8
Fig. 5 - Hydraulic Motor Breakdown, 71729 . . . 4-10
Fig. 6 - Hydraulic Motor Breakdown, 1029379 4-11
Fig. 7 - Hydraulic Steering Valve Breakdown, 1024260 4-12
Fig. 8 - Hydraulic Valve Breakdown, 1038566 . 4-14
Fig. 9 - Hydraulic Valve Breakdown, 1072995 . 4-16
Fig. 10 - Hydraulic Valve Breakdown, 1037805 . 4-18
Fig. 11 - Hydraulic Valve Breakdown, 1072997 . 4-20
Fig. 12 - Hydraulic Motor Breakdown, 53485 . . . 4-22
Fig. 13 - Metering Solution Pump Breakdown, 73260 4-23
Fig. 14 - Water Pump Breakdown, 1026743 . . . 4-24
Fig. 15 - Water Pump Motor Breakdown, 1038855 4-25
Fig. 16 - ec- H20 Module Assembly Breakdown, 9007882 4-26
Fig. 17 - Seat Breakdown, 1072456 4-28
Fig. 18 - FaST Injector Assembly Breakdown, 9008868 4-30

Fig. 1 - Extended Scrub Pump Breakdown, 1021210

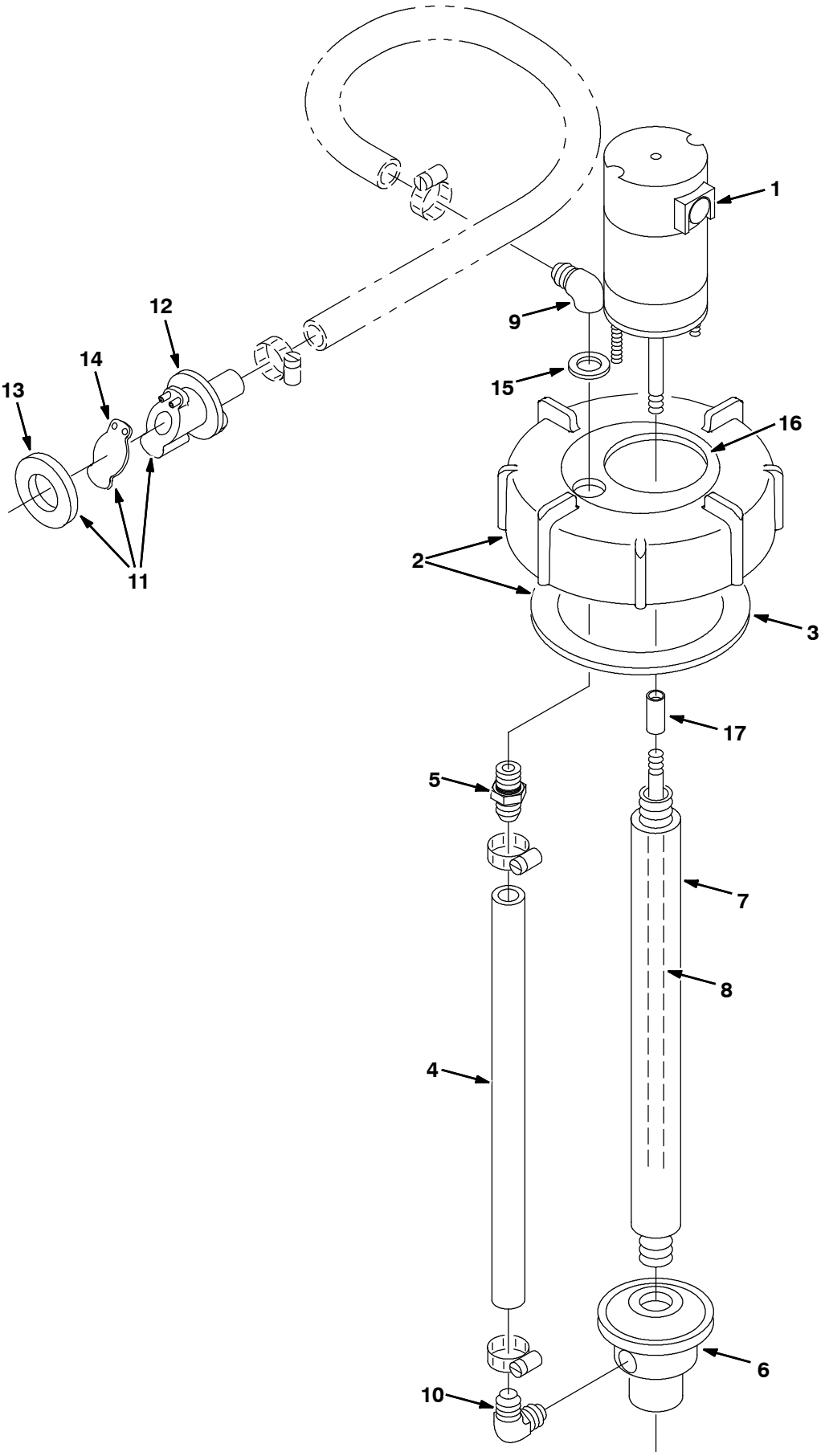

354377 - ALL

Fig. 1 - Extended Scrub Pump Breakdown, 1021210

	Ref.	Part No.	Serial Number	Description	Qty.
▽		1021210	(000000-)	Pump Assy, Column, Es	1
▲▽	1	9002708	(000000-)	Motor, Ele, 12vdc, Pump, Water	1
▲▲		78829	(000000-)	Kit, Brush, Motor, Ele	1
▲▽	2	24358	(000000-)	Cap Assy, Tank, Drain	1
▲▲	3	1031699	(000000-)	Gasket, 4.05id 5.29od .19 [Buna]	1
▲	4	78833	(000000-)	Tube, Vinyl, Pump, Water	1
▲	5	78398	(000000-)	Fitting, Plstc, Str, Bm12/Pm08, Nyl	1
▲	6	78843	(000000-)	Housing Kit, Pump, Water	1
▲	7	78836	(000000-)	Column, Pump, Water	1
▲	8	9002709	(000000-)	Shaft, Pump, Water	1
▲	9	78838	(000000-)	Fitting, E, Gr	1
▲	10	78839	(000000-)	Fitting, Plstc, E90, Pf Bm [Es Pump]	1
▲▽	11	78842	(000000-)	Kit, Valve, Check, Pump, Water	1
▲▲	12	78840	(000000-)	Valve, Check, Pump, Water	1
▲▲	13	73342	(000000-)	Gasket, .25 1.88d 1.0id [Poron]	1
▲▲	14	78841	(000000-)	Flapper, Valve, Pump, Water	1
▲	15	78830	(000000-)	Washer, Rbr	1
▲	16	22790	(000000-)	Insert, Cap, Mount, Es Pump	1
▲	17	23285	(000000-)	Sleeve, Pump, Water	1

Fig. 2 - Hydraulic Motor Breakdown, 379609

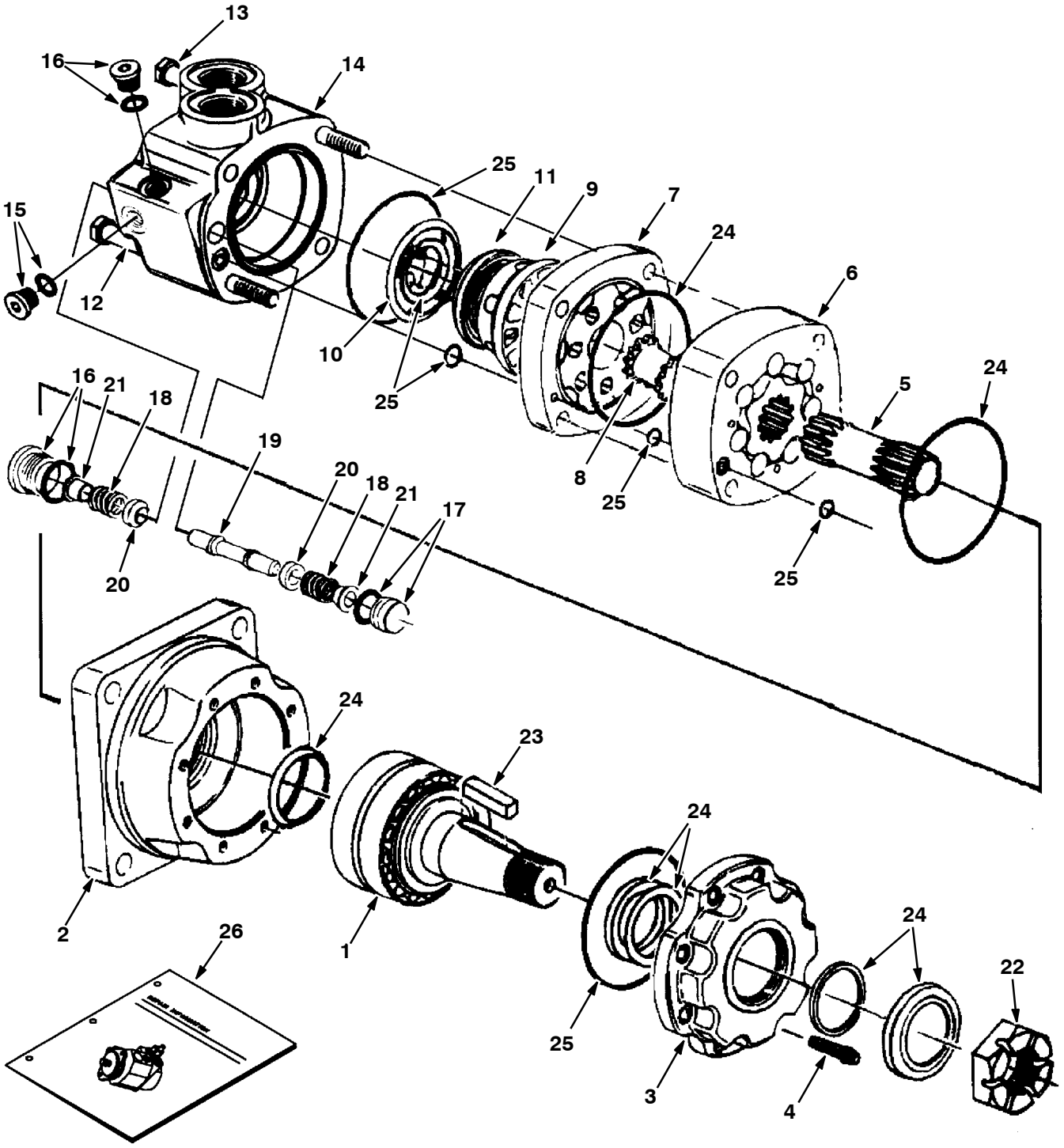

350628- 09670

Fig. 2 - Hydraulic Motor Breakdown, 379609

	Ref.	Part No.	Serial Number	Description	Qty.
▽		379609	(000000-)	Motor, Hyd, Gear, [Int], 19.0 X 3000	1
▲	1	74165	(000000-)	Shaft, Motor, Hyd	1
▲	2	74166	(000000-)	Housing, Brg, Motor, Hyd	1
▲	3	74167	(000000-)	Retainer, Motor, Hyd	1
▲	4	74168	(000000-)	Screw, Cap, Motor, Hyd	8
▲	5	37616	(000000-)	Drive, Motor, Hyd	1
▲	6	37756	(000000-)	Geroler, Motor, Hyd	1
▲	7	74122	(000000-)	Plate, Valve, Motor, Hyd	1
▲	8	52405	(000000-)	Valve, Motor, Hyd	1
▲	9	74123	(000000-)	Valve, Motor, Hyd	1
▲	10	34178	(000000-)	Spring, Motor, Hyd	2
▲	11	38968	(000000-)	Ring, Motor, Hyd	1
▲	12	74125	(000000-)	Bolt, Motor, Hyd	3
▲	13	38255	(000000-)	Bolt, Motor, Hyd	1
▲	14	373297	(000000-)	Housing, Valve	1
▲	15	373298	(000000-)	Plug	1
▲	16	373260	(000000-)	Plug, Pump, Hyd, Gear	2
▲	17	373299	(000000-)	Plug	1
▲	18	373291	(000000-)	Spring	2
▲	19	373217	(000000-)	Piston, Pump, Hyd, Gear	1
▲	20	373226	(000000-)	Poppet, Pump, Hyd, Gear	2
▲	21	373236	(000000-)	Sleeve, Dashpo, Pump, Hyd, Gear	2
▲	22	45622	(000000-)	Nut, Motor, Hyd	1
▲	23	45623	(000000-)	Key, Motor, Hyd	1
▲	24	79828	(000000-)	Kit, Seal, Motor, Hyd	1
▲	25	33580	(000000-)	Kit, Seal, Motor, Hyd	1
	26	79729	(000000-)	Instr, Repair, Motor, Hyd, Gear	1

Fig. 3 - Hydraulic Pump Breakdown, 1024251

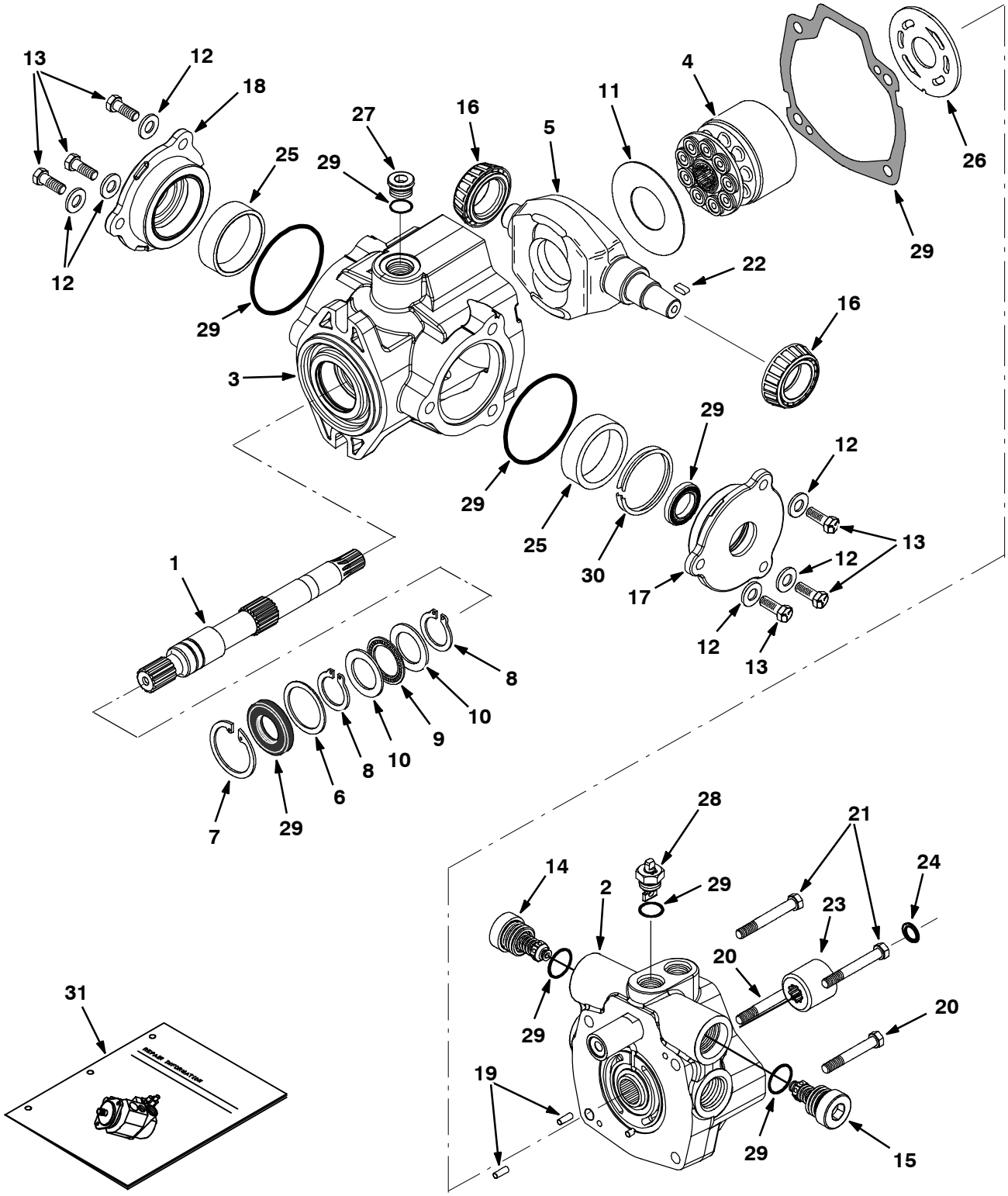

ALL

Fig. 3 - Hydraulic Pump Breakdown, 1024251

	Ref.	Part No.	Serial Number	Description	Qty.
▽		1024251	(000000-)	Pump, Hyd, Piston, Var, 1.24 4000, Cw	1
▲	1	373681	(000000-)	Shaft, Pump	1
▲	2	373427	(000000-)	Cover, End	1
▲	3	373389	(000000-)	Housing	1
▲	4	02706	(000000-)	Pump Kit, Hyd, Rotating [Cessna]	1
▲	5	373493	(000000-)	Plate, Cam	1
▲	6	70096	(000000-)	Washer, Flat, Pump, Hyd	1
▲	7	55926	(000000-)	Ring, Retaining, Pump, Hyd	1
▲	8	373434	(000000-)	Ring, Retaining	2
▲	9	74225	(000000-)	Bearing, Thrust, Pump, Hyd	1
▲	10	74226	(000000-)	Race, Brg, Pump, Hyd	2
▲	11	373327	(000000-)	Insert, Plt, Cam, Pump, Hyd	1
▲	12	373391	(000000-)	Washer, Pump, Hyd [En]	6
▲	13	373346	(000000-)	Screw, Cap	6
▲	14	373494	(000000-)	Valve, Relief, 4000 Psi	1
▲	15	373678	(000000-)	Valve, Relief, 3000 Psi	1
▲	16	373317	(000000-)	Bearing, Cone, Pump, Hyd	2
▲	17	373393	(000000-)	Plate, Cover	1
▲	18	373394	(000000-)	Plate, Cover	1
▲	19	70100	(000000-)	Pin, Dowel, Pump, Hyd	2
▲	20	373347	(000000-)	Screw, Cap	2
▲	21	373348	(000000-)	Screw, Cap	2
▲	22	74237	(000000-)	Key, Shaft, Pump, Hyd	1
▲	23	373679	(000000-)	Coupler, Pump	1
▲	24	373680	(000000-)	Ring, Lock	1
▲	25	373395	(000000-)	Bearing, Cup	2
▲	26	74180	(000000-)	Plate, Valve, Pump, Hyd	1
▲	27	13907	(000000-)	Fitting, Hyd, Plug, Om08	1
▲	28	373413	(000000-)	Actuator, Valve, By- Pass [En]	1
▲	29	373398	(000000-)	Seal Kit, Pump, Hyd	1
▲	30	373402	(000000-)	Shim Kit	1
	31	373429	(000000-)	Instr, Repair, Pump	1

Fig. 4 - Hydraulic Gear Pump Breakdown, 1034448

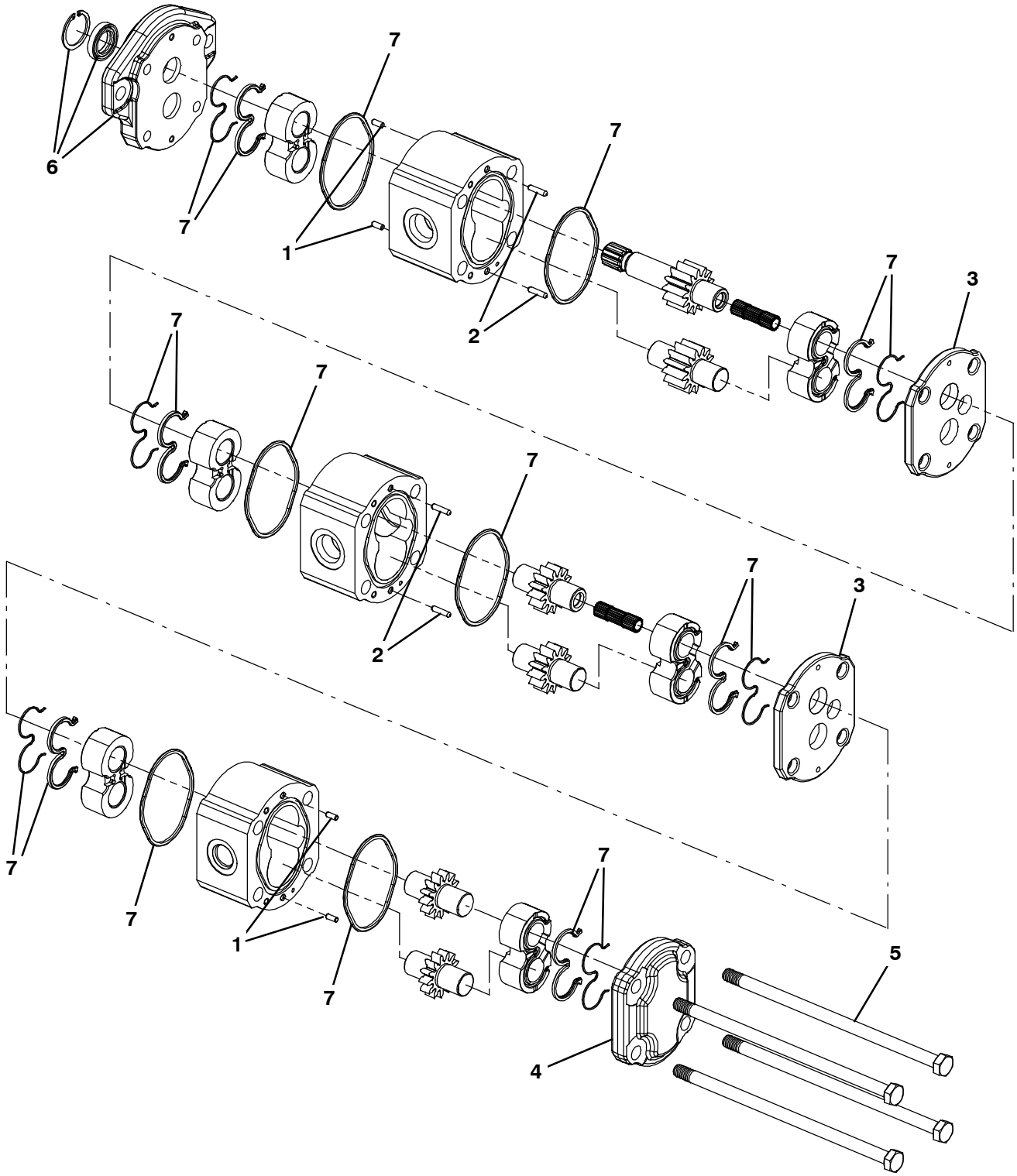

354712

Fig. 4 - Hydraulic Gear Pump Breakdown, 1034448

	Ref.	Part No.	Serial Number	Description	Qty.
▽		1034448	(000000-)	Pump, Hyd, Gear, Ext, 3, 00.85 2500, Cw	1
▲	1	21936	(000000-)	Pin, Dowel [Bn]	4
▲	2	21937	(000000-)	Pin, Dowel [Bn]	4
▲	3	21938	(000000-)	Plate, Distance, Pump, Hyd	2
▲	4	21939	(000000-)	Cover, End, Hyd Pump	1
▲	5	9004473	(000000-)	Bolt, M10x1.5	4
▲	6	21942	(000000-)	Flange Kit	1
▲	7	21946	(000000-)	Seal Kit, Pump, Hyd	1

Fig. 5 - Hydraulic Motor Breakdown, 71729

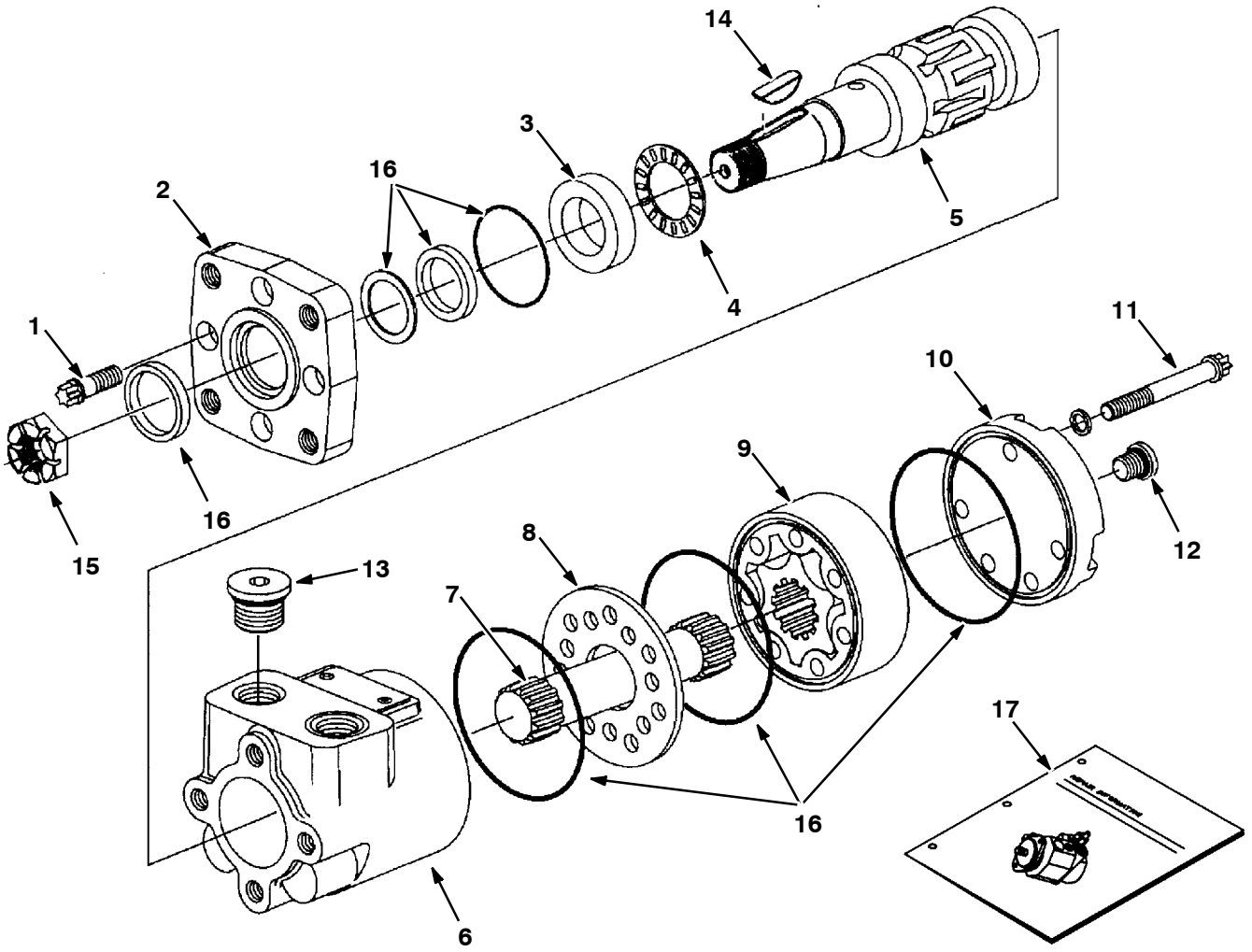

09606- 09670 - ALL

	Ref.	Part No.	Serial Number	Description	Qty.
▽		71729	(000000-)	Motor, Hyd Gear In 4.5 B 1500	1
▲	1	37555	(000000-)	Screw	4
▲	2	31354	(000000-)	Flange Mounting	1
▲	3	16695	(000000-)	Race Thrust	1
▲	4	45628	(000000-)	Thrust Bearing	1
▲	5	31375	(000000-)	Shaft, Output	1
▲	6	74100	(000000-)	Housingl	1
▲	7	31379	(000000-)	Drive	1
▲	8	74094	(000000-)	Spacer Plate	1
▲	9	31383	(000000-)	Gerotor Set	1
▲	10	74095	(000000-)	End Cap	1
▲	11	65241	(000000-)	Cap Screw	5
▲	12	74098	(000000-)	Plug #4	1
▲	13	74099	(000000-)	Plug #10	2
▲	14	00500- 15	(000000-)	Key- Wdruff 0.25 1.00	1
▲	15	39527	(000000-)	Nut- Hxslot .75- 16 Pltd	1
▲	16	61490	(000000-)	Seal Replmt Kit	1
▲	17	74250	(000000-)	Instr. Repair Info, Motor	1

Fig. 6 - Hydraulic Motor Breakdown, 1029379

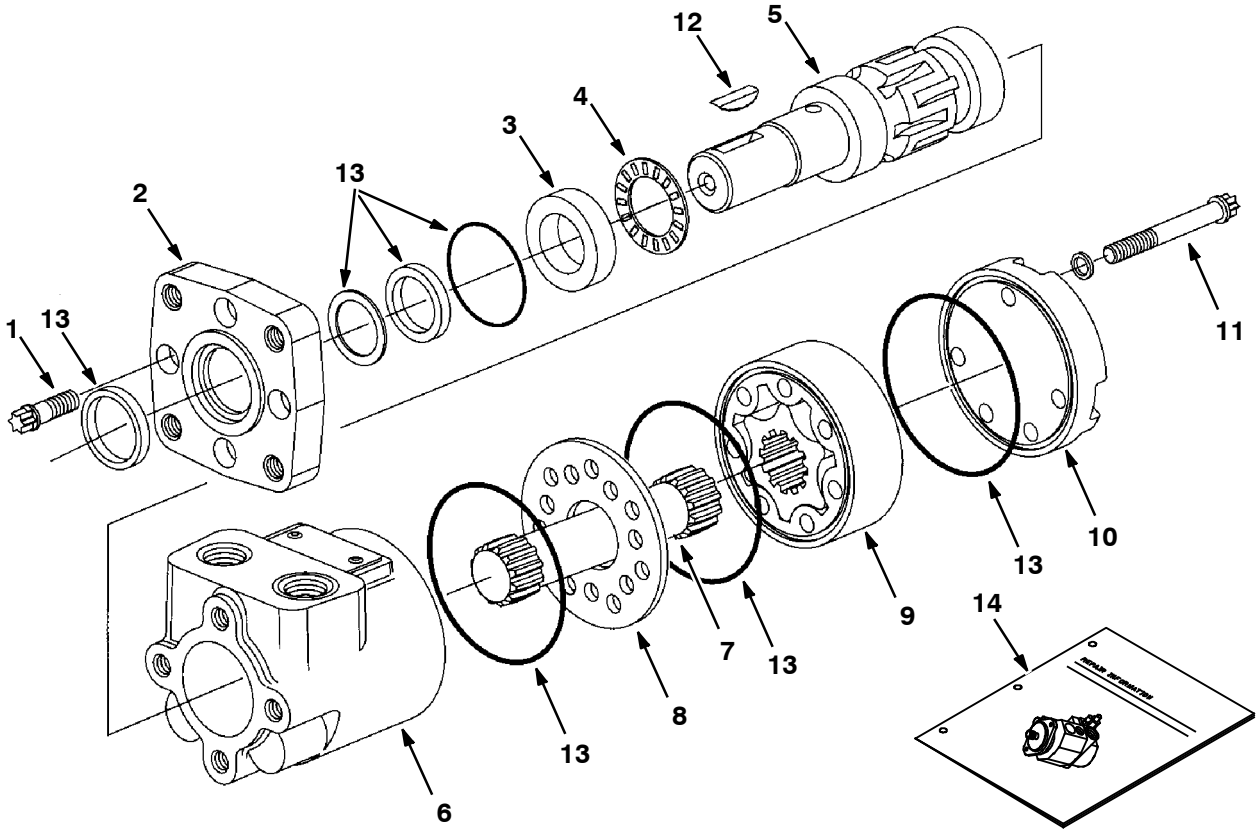

10859- 09670 - ALL

	Ref.	Part No.	Serial Number	Description	Qty.
▽		1029379	(000000-)	Motor, Hyd, Gear, Int 08.9 Bi- Dir 2500	1
▲	1	37555	(000000-)	Screw, Motor, Hyd [En]	4
▲	2	31354	(000000-)	Flange, Motor, Hyd [En]	1
▲	3	16695	(000000-)	Ace, Thrust, Motor, Hyd [En]	1
▲	4	45628	(000000-)	Bearing, Thrust	1
▲	5	28854	(000000-)	Shaft, Output, Motor, Hyd [En]	1
▲	6	74100	(000000-)	Housing, Motor, Hyd [En]	1
▲	7	21955	(000000-)	Drive [Cl]	1
▲	8	74094	(000000-)	Plate, Spacer, Motor, Hyd [En]	1
▲	9	21956	(000000-)	Gerotor Set [Cl]	1
▲	10	65230	(000000-)	End Cap, Motor, Hyd [En]	1
▲	11	21958	(000000-)	Cap Screw Cl	5
▲	12	00500- 15	(000000-)	Key, Woodruff, 0.25 1.00 [Asa#0808]	1
▲	13	61490	(000000-)	Seal Kit, Motor [Cl]	1
▲	14	74250	(000000-)	Instr, Motor, Hyd, Repair [En]	1

Fig. 7 - Hydraulic Steering Valve Breakdown, 1024260

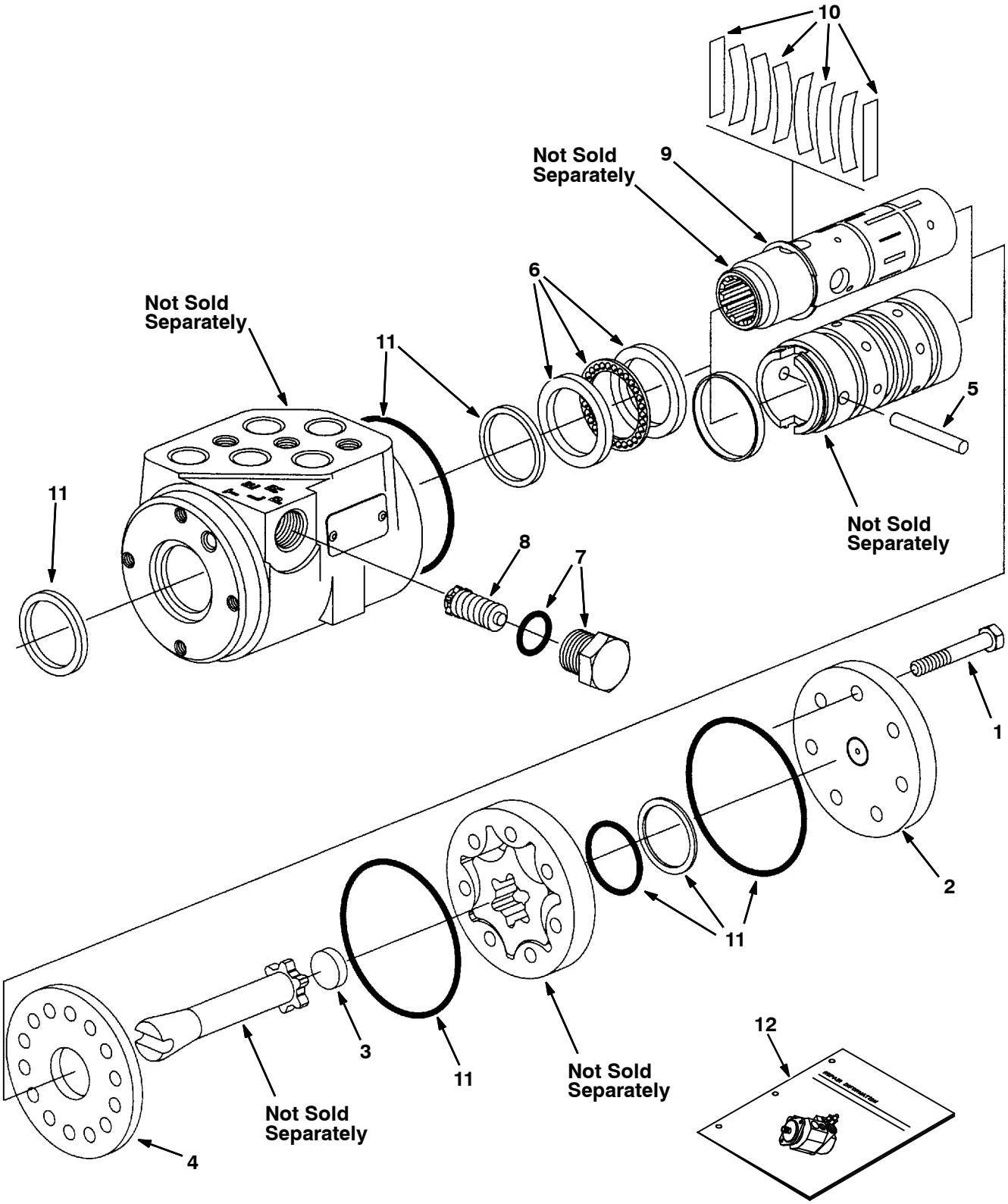

Fig. 7 - Hydraulic Steering Valve Breakdown, 1024260

	Ref.	Part No.	Serial Number	Description	Qty.
▽		1024260	(000000-)	Steer- Control, Hyd05, 06.1 2030	1
▲	1	74183	(000000-)	Screw, Valve, Steering	7
▲	2	74185	(000000-)	Cap, End, Valve, Steering	1
▲	3	74193	(000000-)	Spacer, Valve, Steering	1
▲	4	74222	(000000-)	Plate, Wear, Steering Valve	1
▲	5	74232	(000000-)	Pin, Valve, Steering	1
▲	6	21935	(000000-)	Bearing Kit [Cl]	1
▲	7	21933	(000000-)	Plug Assy [Cl]	1
▲	8	21934	(000000-)	Valve Assy, Relief [Cl]	1
▲	9	74243	(000000-)	Ring, Retainer, Steering Valve	1
▲	10	74196	(000000-)	Spring Kit, Scu [Cl]	1
▲	11	74244	(000000-)	Seal Kit, Steering [Cl]	1
▲	12	74245	(000000-)	Instr, Valve, Steering, Repair	1

Fig. 8 - Hydraulic Valve Breakdown, 1038566

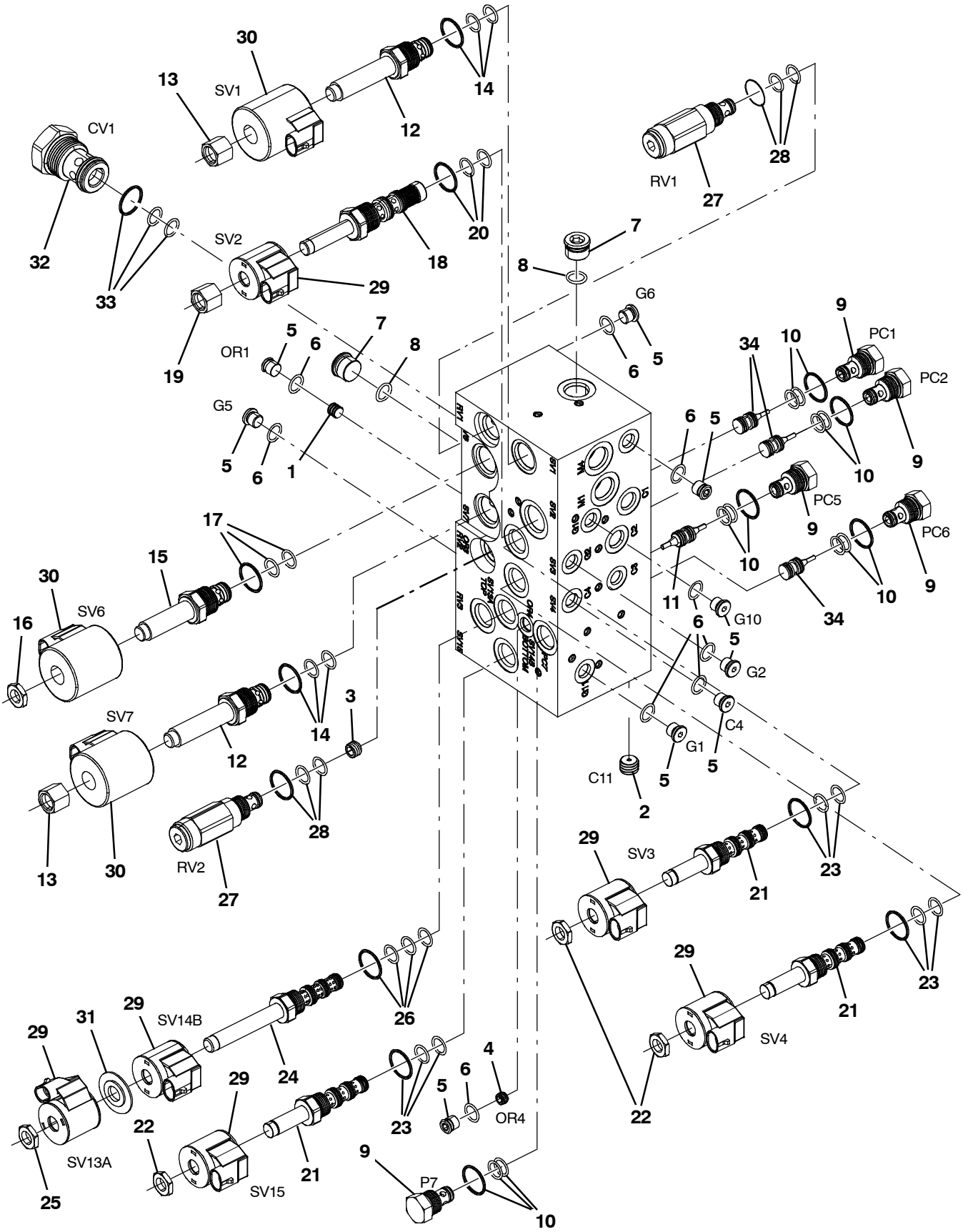

354643

Fig. 8 - Hydraulic Valve Breakdown, 1038566

	Ref.	Part No.	Serial Number	Description	Qty.
▽		1038566	(000000-)	Valve, Hyd, Solenoid, 12vdc	1
▲	1	373665	(000000-)	Plug, Orifice, Valve, Hyd, .046	1
▲	2	373633	(000000-)	Plug, Orifice, Valve, Hyd, .040	1
▲	3	9004475	(000000-)	Plug Orifice, Valve, Hyd, .140	1
▲	4	373660	(000000-)	Plug, Orifice, Valve, Hyd, .030	1
▲▽	5	74098	(000000-)	Fitting, Hyd, Plug, Om04	9
▲▲	6	77003	(000000-)	Seal, Org, .072 X 00.35id #04	1
▲▽	7	13904	(000000-)	Fitting, Plug, Org, #6, Valve [Cec]	2
▲▲	8	77005	(000000-)	Seal, Org, .078 X 00.47id #06	1
▲▽	9	373656	(000000-)	Valve, Check	5
▲▲	10	373647	(000000-)	Seal Kit, Cartridge	1
▲	11	373688	(000000-)	Spool, Pilot, Dual, Hyd	1
▲▽	12	373663	(000000-)	Valve, Stem, No	2
▲▲	13	373670	(000000-)	Nut, Solenoid	1
▲▲	14	373671	(000000-)	Seal Kit, Cartridge	1
▲▽	15	373667	(000000-)	Stem, Valve, Hyd	1
▲▲	16	373648	(000000-)	Nut, Coil, F/#8	1
▲▲	17	373671	(000000-)	Seal Kit, Cartridge	1
▲▽	18	373664	(000000-)	Cartridge, Psi Cntrl, Valve, Hyd	1
▲▲	19	373673	(000000-)	Nut, Solenoid	1
▲▲	20	373672	(000000-)	Seal Kit, Cartridge	1
▲▽	21	373657	(000000-)	Stem, Valve, Hyd [4w2p]	3
▲▲	22	373648	(000000-)	Nut, Coil, F/#8	1
▲▲	23	373647	(000000-)	Seal Kit, Cartridge	1
▲▽	24	373637	(000000-)	Valve, Cntrl, Solenoid	1
▲▲	25	373684	(000000-)	Nut, Coil, Nyl Patch	2
▲▲	26	373671	(000000-)	Seal Kit, Cartridge	1
▲▽	27	373666	(000000-)	Valve, Relief	2
▲▲	28	373647	(000000-)	Seal Kit, Cartridge	1
▲	29	373640	(000000-)	Solenoid, #8, 12vdc	6
▲	30	373642	(000000-)	Solenoid, #10, 12vdc	3
▲	31	373639	(000000-)	Spacer, Coil, #8	1
▲▽	32	373668	(000000-)	Valve, Check	1
▲▲	33	373671	(000000-)	Seal Kit, Cartridge	1
▲	34	373658	(000000-)	Spool, Pilot, Hyd	3

Fig. 9 - Hydraulic Valve Breakdown, 1072995

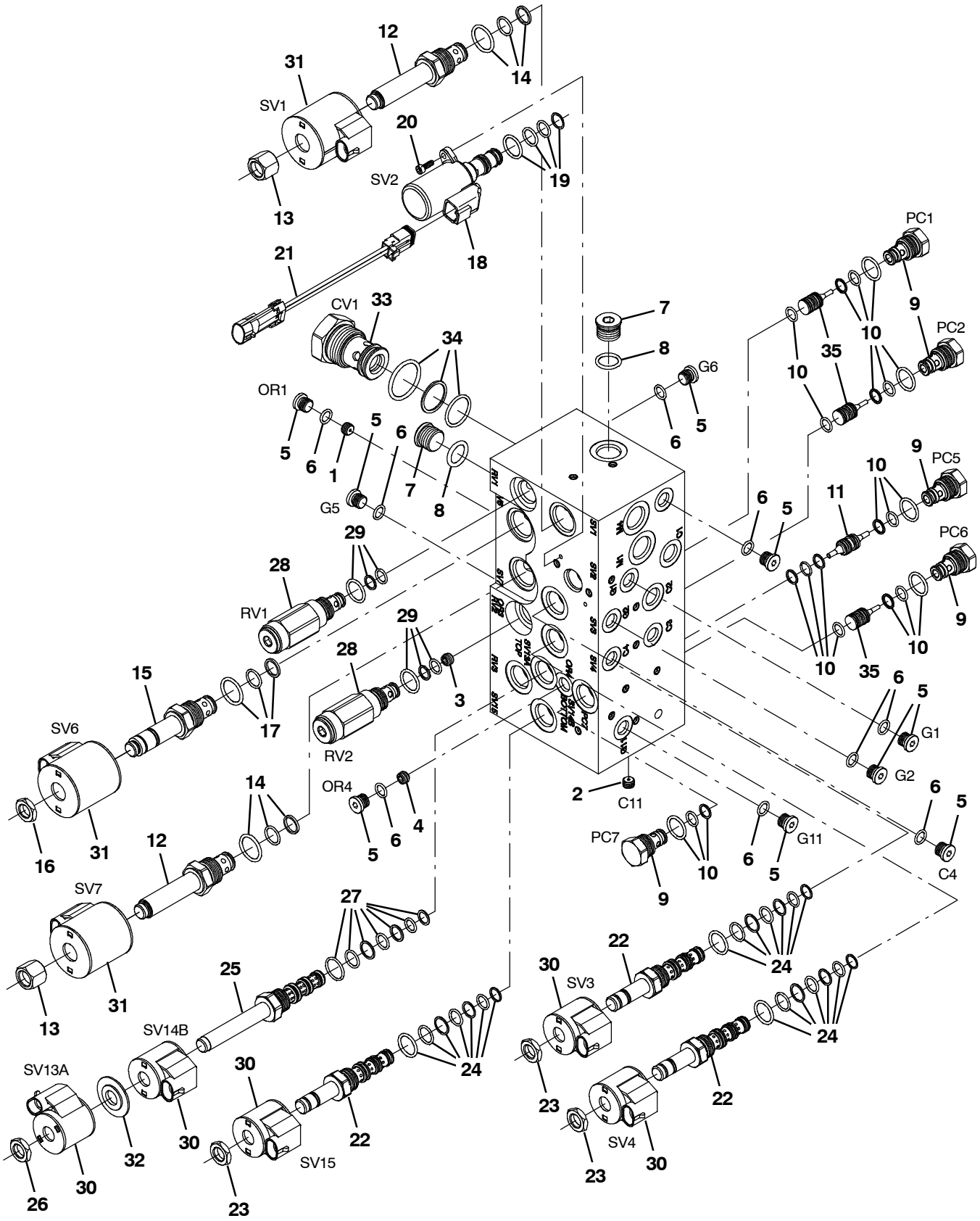

356401 - M20

Fig. 9 - Hydraulic Valve Breakdown, 1072995

	Ref.	Part No.	Serial Number	Description	Qty.
▽		1072995	(000000-)	Valve, Cntrl, Hyd, Solenoid, 12vdc 10gpm	1
▲	1	373665	(000000-)	Plug, Orifice, Valve, Hyd, .046	1
▲	2	373633	(000000-)	Plug, Orifice, Valve, Hyd, .040	1
▲	3	9004475	(000000-)	Plug Orifice, Valve, Hyd, .140	1
▲	4	373660	(000000-)	Plug, Orifice, Valve, Hyd, .030	1
▲▽	5	74098	(000000-)	Fitting, Hyd, Plug, Om04	9
▲▲	6	77003	(000000-)	Seal, Org, .072 X 00.35id #04	1
▲▽	7	13904	(000000-)	Fitting, Plug, Org, #6, Valve [Cec]	2
▲▲	8	77005	(000000-)	Seal, Org, .078 X 00.47id #06	1
▲▽	9	373656	(000000-)	Valve, Check	5
▲▲	10	373647	(000000-)	Seal Kit, Cartridge	1
▲	11	373688	(000000-)	Spool, Pilot, Dual, Hyd	1
▲▽	12	373663	(000000-)	Valve, Stem, No	2
▲▲	13	373670	(000000-)	Nut, Solenoid	1
▲▲	14	373671	(000000-)	Seal Kit, Cartridge	1
▲▽	15	373667	(000000-)	Stem, Valve, Hyd	1
▲▲	16	373648	(000000-)	Nut, Coil, F/#8	1
▲▲	17	373671	(000000-)	Seal Kit, Cartridge	1
▲▽	18	9011347	(000000-)	Valve Assy [Proportional]	1
▲▲	19	9011343	(000000-)	Seal Kit, Valve [Ehpr98]	1
▲▲	20	9011345	(000000-)	Screw, Mtg [Ehpr98]	2
▲▲	21	9011346	(000000-)	Harness, Jumper [Deutsch To Mpack]	1
▲▽	22	373657	(000000-)	Stem, Valve, Hyd [4w2p]	3
▲▲	23	373648	(000000-)	Nut, Coil, F/#8	1
▲▲	24	373647	(000000-)	Seal Kit, Cartridge	1
▲▽	25	373637	(000000-)	Valve, Cntrl, Solenoid	1
▲▲	26	373684	(000000-)	Nut, Coil, Nyl Patch	2
▲▲	27	373671	(000000-)	Seal Kit, Cartridge	1
▲▽	28	373666	(000000-)	Valve, Relief	2
▲▲	29	373647	(000000-)	Seal Kit, Cartridge	1
▲	30	373640	(000000-)	Solenoid, #8, 12vdc	5
▲	31	373642	(000000-)	Solenoid, #10, 12vdc	3
▲	32	373639	(000000-)	Spacer, Coil, #8	1
▲▽	33	373668	(000000-)	Valve, Check	1
▲▲	34	373671	(000000-)	Seal Kit, Cartridge	1
▲	35	373658	(000000-)	Spool, Pilot, Hyd	3

Fig. 10 - Hydraulic Valve Breakdown, 1037805

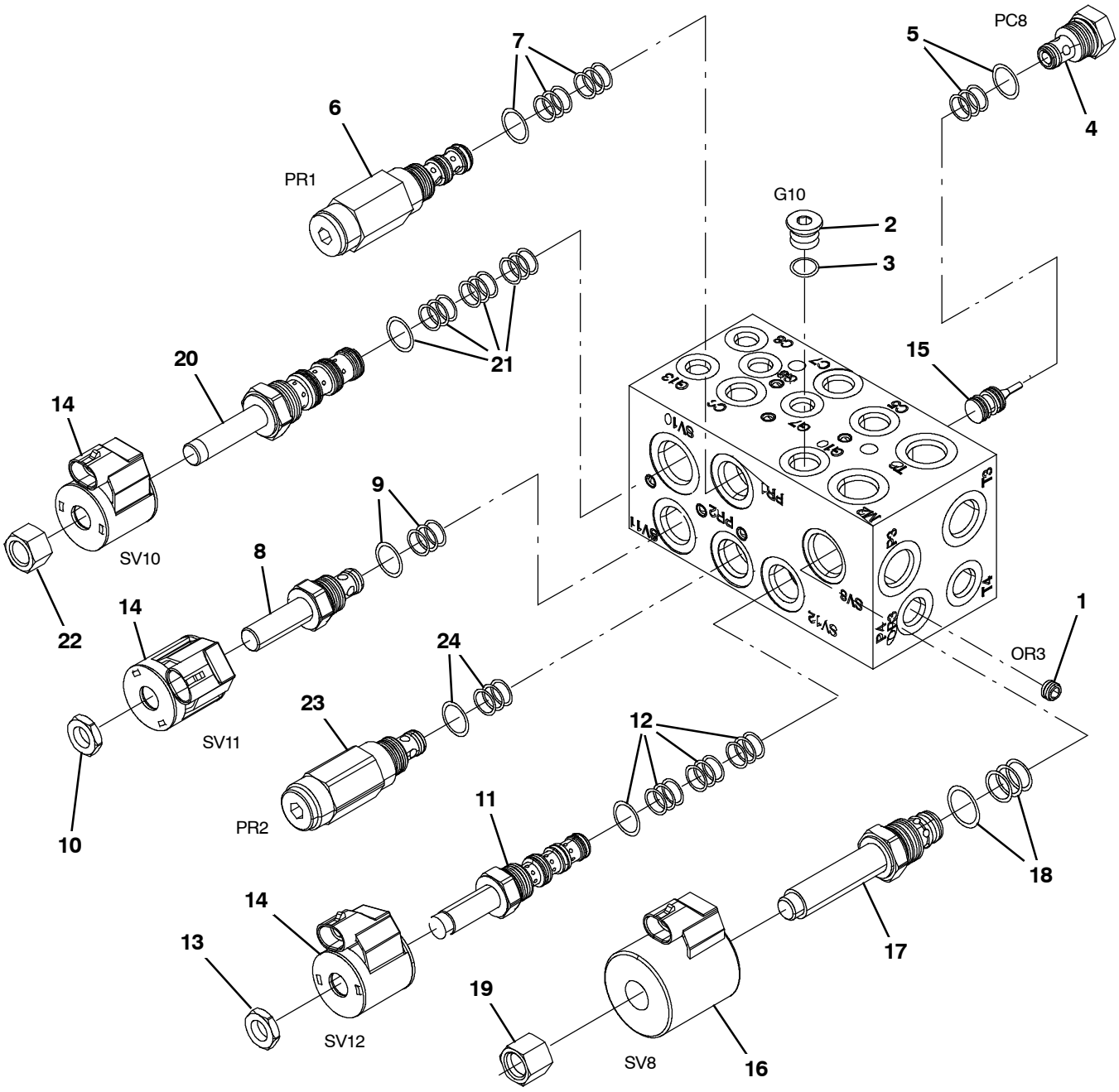

354581 - ALL

Fig. 10 - Hydraulic Valve Breakdown, 1037805

	Ref.	Part No.	Serial Number	Description	Qty.
▽		1037805	(000000-)	Valve, Cntrl, Hyd, Solenoid, 03/16gpm	1
▲	1	373633	(000000-)	Plug, Orifice, Valve, Hyd, .040	1
▲▽	2	13904	(000000-)	Fitting, Plug, Org, #6, Valve [Cec]	1
▲▲	3	77005	(000000-)	Seal, Org, .078 X 00.47id 06	1
▲▽	4	373656	(000000-)	Valve, Check	1
▲▲	5	373647	(000000-)	Seal Kit, Cartridge	1
▲▽	6	373661	(000000-)	Valve, Relief	1
▲▲	7	373647	(000000-)	Seal Kit, Cartridge	1
▲▽	8	373662	(000000-)	Stem, Valve, Hyd	1
▲▲	9	373647	(000000-)	Seal Kit, Cartridge	1
▲▲	10	373648	(000000-)	Nut, Coil, Nyl Patch	1
▲▽	11	373657	(000000-)	Stem, Valve, Hyd [4w2p]	1
▲▲	12	373647	(000000-)	Seal Kit, Cartridge	1
▲▲	13	373648	(000000-)	Nut, Coil, F/#8	1
▲	14	373640	(000000-)	Solenoid, #8, 12vdc	3
▲	15	373658	(000000-)	Spool, Pilot, Hyd	1
▲	16	373642	(000000-)	Solenoid, #10, 12vdc	1
▲▽	17	373663	(000000-)	Valve, Stem, No	1
▲▲	18	373646	(000000-)	Seal Kit, Cartridge	1
▲▲	19	373670	(000000-)	Nut, Solenoid	1
▲▽	20	373664	(000000-)	Cartridge, Psi Cntrl, Valve, Hyd	1
▲▲	21	373672	(000000-)	Seal Kit, Cartridge	1
▲▲	22	373673	(000000-)	Nut, Solenoid	1
▲▽	23	373683	(000000-)	Valve, Relief	1
▲▲	24	373647	(000000-)	Seal Kit, Cartridge	1

Fig. 11 - Hydraulic Valve Breakdown, 1072997

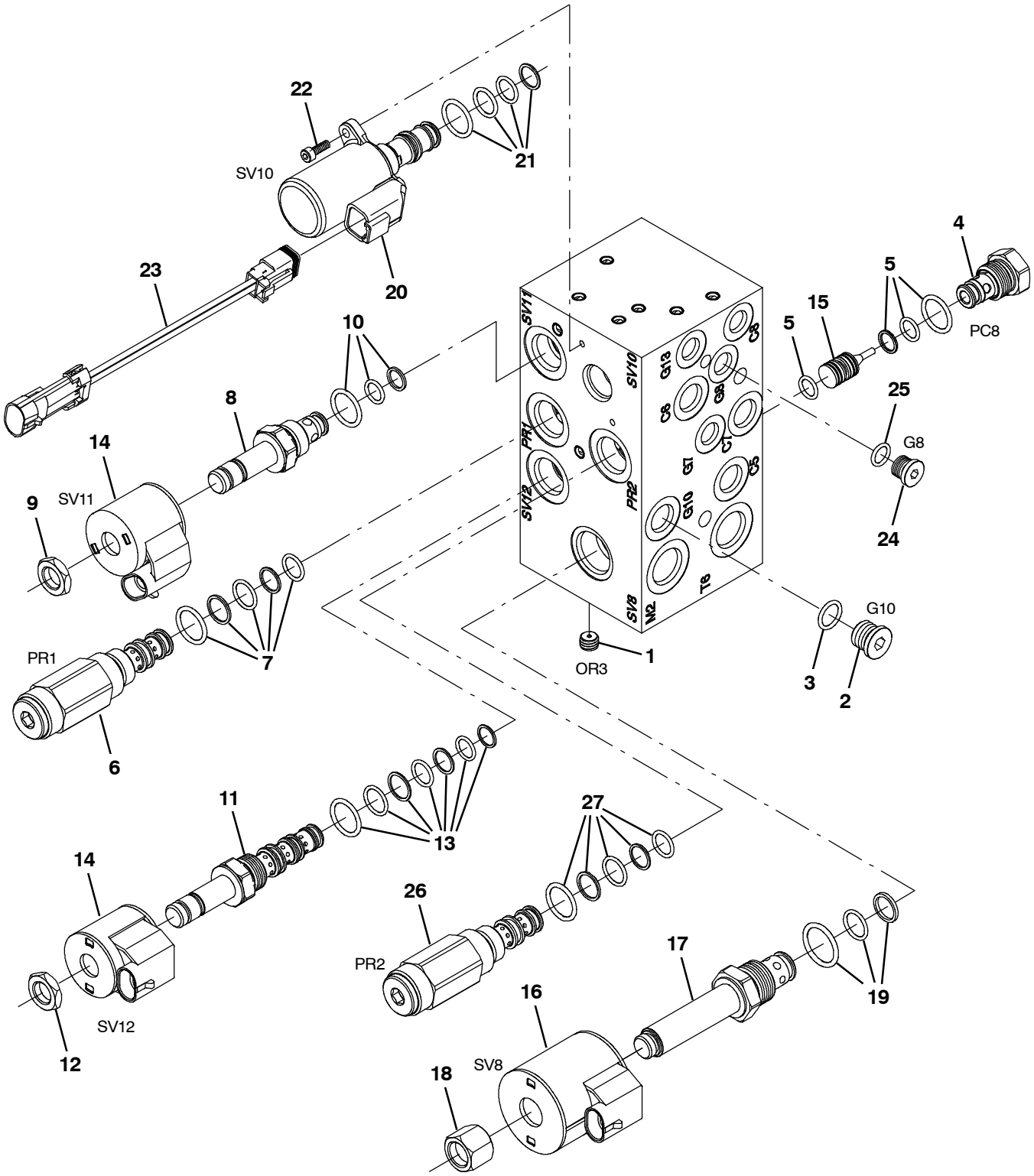

356403 - ALL

Fig. 11 - Hydraulic Valve Breakdown, 1072997

	Ref.	Part No.	Serial Number	Description	Qty.
▽		1072997	(000000-)	Valve, Cntrl, Hyd, Solenoid, 03/16gpm	1
▲	1	373633	(000000-)	Plug, Orifice, Valve, Hyd, .040	1
▲▽	2	13904	(000000-)	Fitting, Plug, Org, #6, Valve [Cec]	1
▲▲	3	77005	(000000-)	Seal, Org, .078 X 00.47id 06	1
▲▽	4	373656	(000000-)	Valve, Check	1
▲▲	5	373647	(000000-)	Seal Kit, Cartridge	1
▲▽	6	373661	(000000-)	Valve, Relief	2
▲▲	7	373647	(000000-)	Seal Kit, Cartridge	1
▲▽	8	373662	(000000-)	Stem, Valve, Hyd	1
▲▲	9	373648	(000000-)	Nut, Coil, Nyl Patch	1
▲▲	10	373647	(000000-)	Seal Kit, Cartridge	1
▲▽	11	373657	(000000-)	Stem, Valve, Hyd [4w2p]	1
▲▲	12	373648	(000000-)	Nut, Coil, F/#8	1
▲▲	13	373647	(000000-)	Seal Kit, Cartridge	1
▲	14	373640	(000000-)	Solenoid, #8, 12vdc	3
▲	15	373658	(000000-)	Spool, Pilot, Hyd	1
▲	16	373642	(000000-)	Solenoid, #10, 12vdc	1
▲▽	17	373663	(000000-)	Valve, Stem, No	1
▲▲	18	373670	(000000-)	Nut, Solenoid	1
▲▲	19	373646	(000000-)	Seal Kit, Cartridge	1
▲▽	20	9011347	(000000-)	Valve Assy [Proportional]	1
▲▲	21	9011343	(000000-)	Seal Kit, Valve [Ehpr98]	1
▲▲	22	9011345	(000000-)	Screw, Mtg [Ehpr98]	2
▲▲	23	9011346	(000000-)	Harness, Jumper [Deutsch To Mpack]	1
▲▽	24	13904	(000000-)	Fitting, Plug, Org, #6, Valve [Cec]	1
▲▲	25	77005	(000000-)	Seal, Org, .078 X 00.47id 06	1
▲▽	26	373683	(000000-)	Valve, Relief	1
▲▲	27	373647	(000000-)	Seal Kit, Cartridge	1

Fig. 12 - Hydraulic Motor Breakdown, 53485

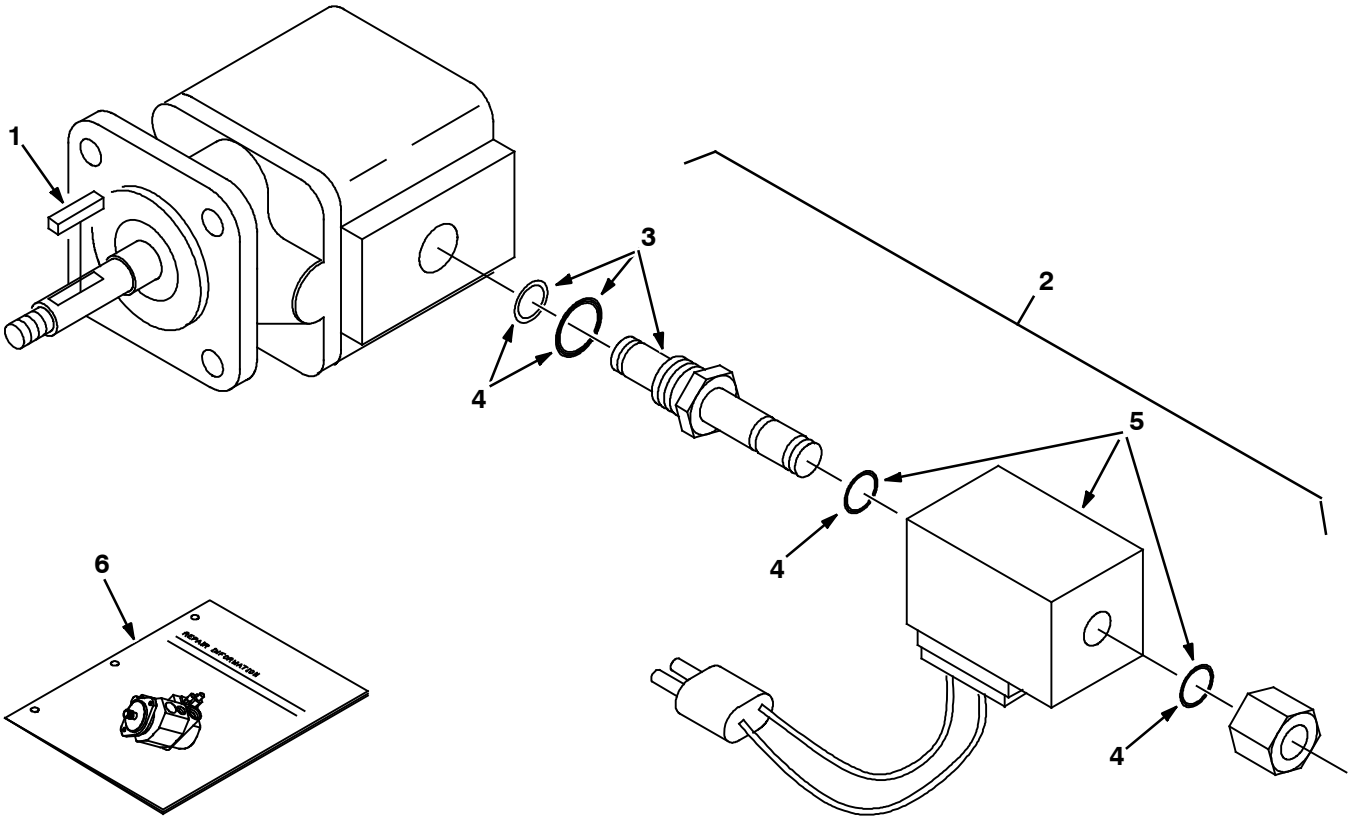

07490 - 09670

	Ref.	Part No.	Serial Number	Description	Qty.
▽		53485	(000000-)	Motor, Hyd, Gear, Ext 0.19 Rh 3000	1
▲		74233	(000000-)	Kit, Seal, Motor, Hyd, Gear[Barns]	1
▲	1	00966	(000000-)	Key, Sq, 0.12 X 0.12, 0.75l	1
▲▽	2	54095	(000000-)	Valve, Hyd Cartridge 10no/- 0	1
▲▲	3	59378	(000000-)	Valve Stem, N.O.Valve, Hyd	1
▲▲	4	48813	(000000-)	Kit, Seal, Valve, Hyd [Cec]	1
▲▲	5	35493	(000000-)	Solenoid, 12v, Valve, Hyd [Cec]	1
	6	IB3614	(000000-)	Instr, Seal Kit, Motor	1

Fig. 13 - Metering Solution Pump Breakdown, 73260

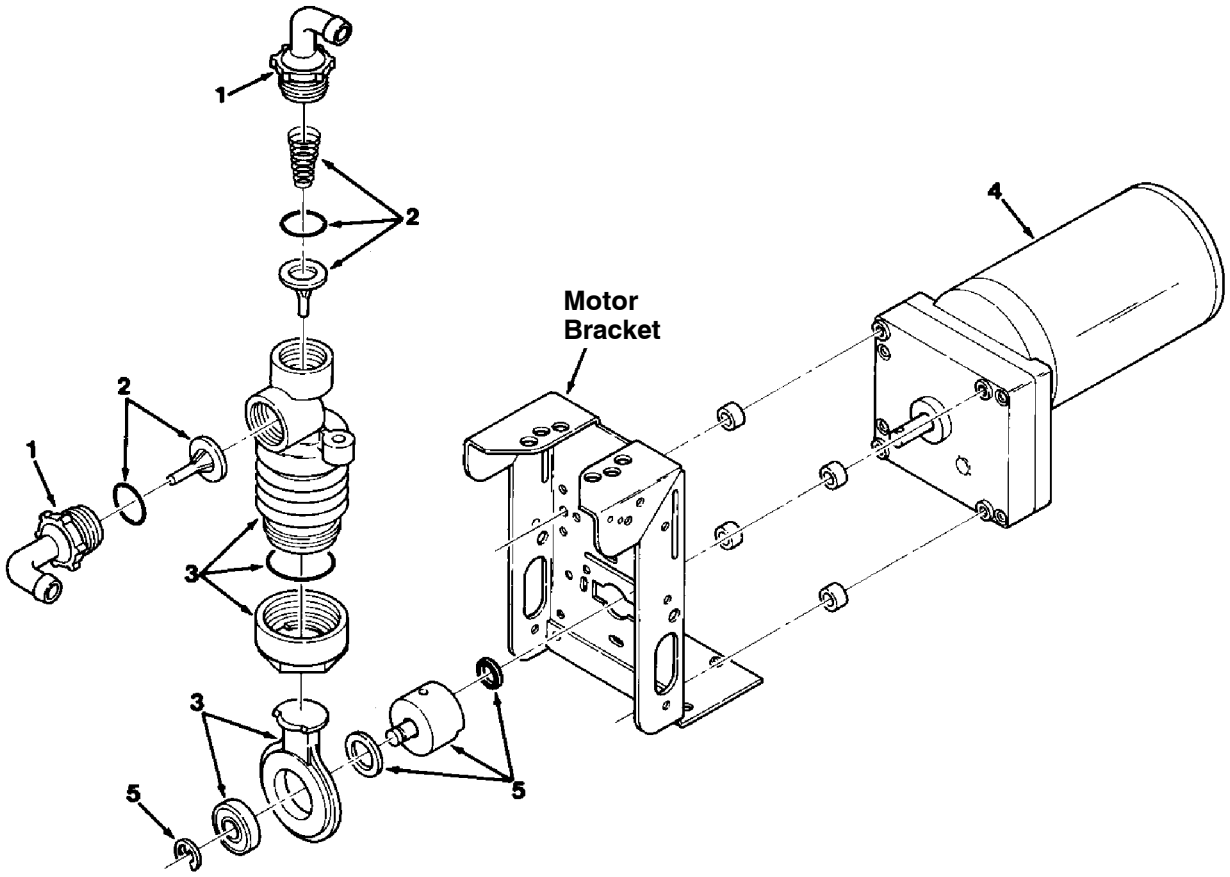

00112 - ALL

	Ref.	Part No.	Serial Number	Description	Qty.
▽		73260	(000000-)	Pump, Detgt, 14vdc, 150ml/Min 20psi	1
▲	1	63923	(000000-)	Tubing Connctr.Kit, Gorman Pmp	1
▲	2	21659	(000000-)	Valve Kit, Poppet, Gorman Rupp	1
▲	3	21657	(000000-)	Kit, Bellows, Pump, Detgt	1
▲	4	78875	(000000-)	Motor, Ele, Gear, 14vdc, Pump, Detgt	1
▲	5	02430	(000000-)	Crank Kit, Pump, F/79323, Replmt	1

Fig. 14 - Water Pump Breakdown, 1026743

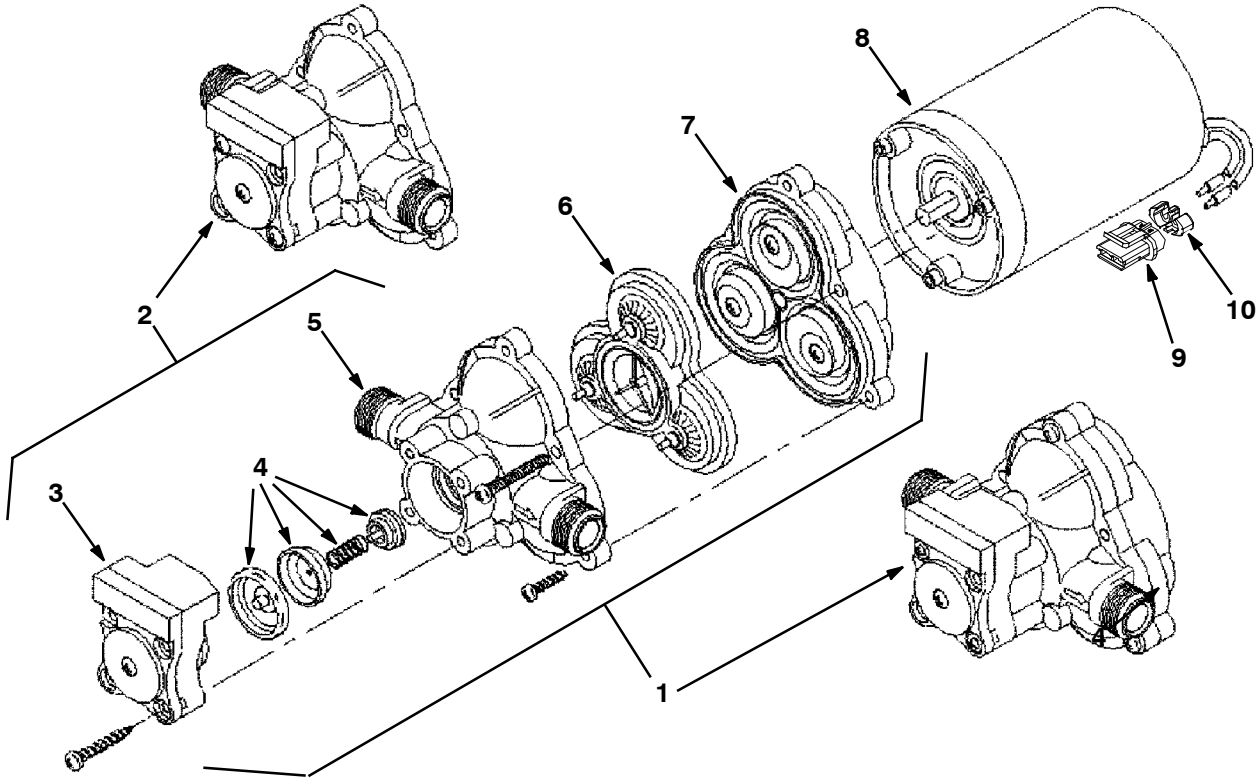

07490 - 09670

	Ref.	Part No.	Serial Number	Description	Qty.
▽		1026743	(000000-)	Pump, Diaphragm	1
▲	1	1031802	(000000-)	Complete Pump Kit, Pump, Repair,	1
▲	2	1031803	(000000-)	Hsg & Switch Kit, Pump, Repair,	1
▲	3	1031796	(000000-)	Switch Kit, Pump, Repair,	1
▲	4	1031797	(000000-)	Chech Valve Kit, Pump, Repair,	1
▲	5	1031798	(000000-)	Upper Hsg Kit, Pump, Repair,	1
▲	6	1031799	(000000-)	Bypass Valve Kit, Pump, Repair,	1
▲	7	1031800	(000000-)	Diaphragm Kit, Pump, Repair,	1
▲	8	1031801	(000000-)	Motor Kit, Pump, Repair,	1
▲	9	78950	(000000-)	Connector, Fem, 02cav, Mp280 Sealed	1
▲	10	78952	(000000-)	Lock, Secondary, 2cav, Mp280 Sealed	1
▲		78951	(000000-)	Terminal, Fem, Mp280, Sealed, 18- 16ga	2
▲		10917	(000000-)	Seal, Wire, 14/16ga [Wp / Mp280 Sealed]	2

Fig. 15 - Water Pump Motor Breakdown, 1038855

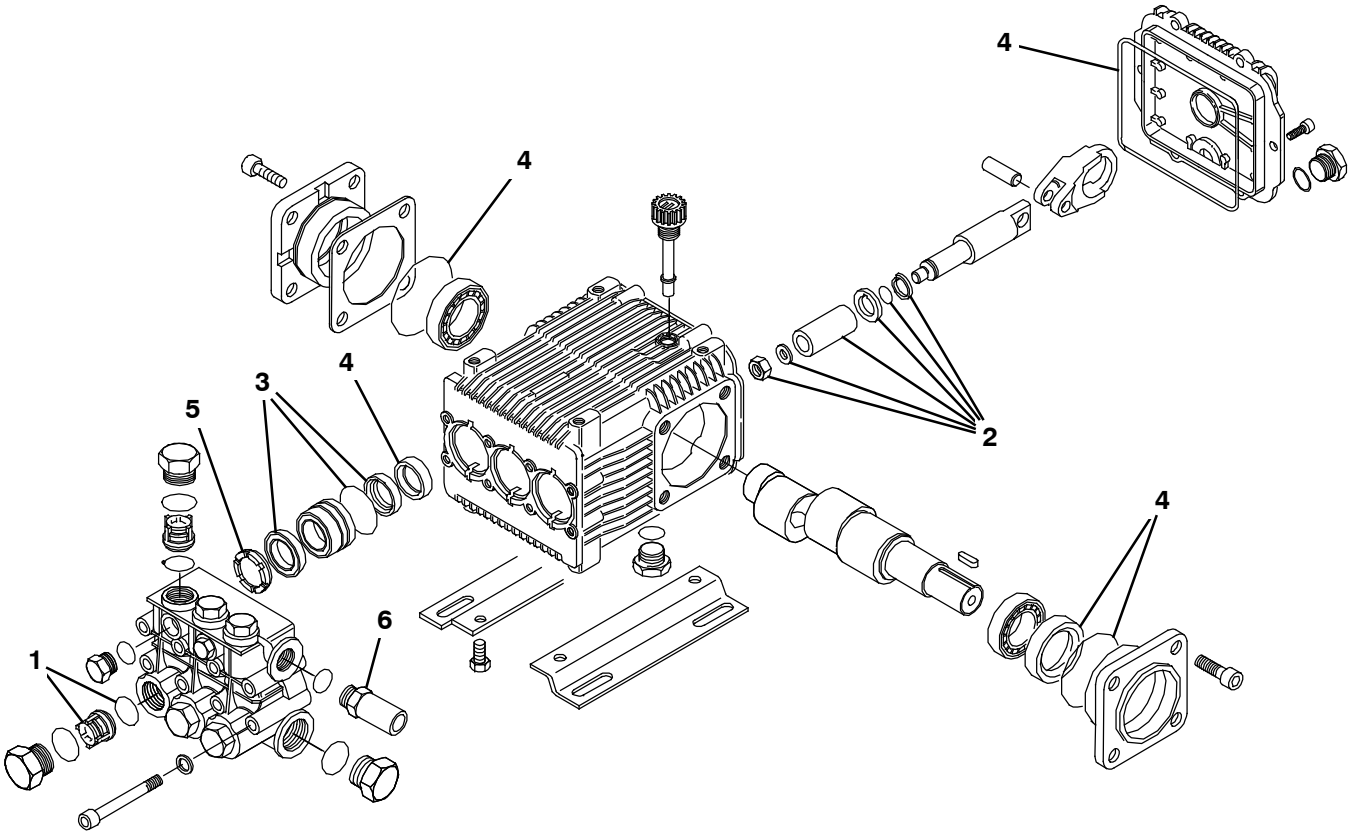

354649

	Ref.	Part No.	Serial Number	Description	Qty.
▽		1038855	(000000-)	Pump, Hyd, Press Washer	1
▲	1	9004290	(000000-)	Valve Kit	1
▲	2	9004291	(000000-)	Piston Kit	1
▲	3	9004288	(000000-)	Seal Kit [Buna]	1
▲	3	9004272	(000000-)	Seal Kit [Vitron]	1
▲	4	9004289	(000000-)	Seal Kit, Oil	1
▲	5	9004292	(000000-)	Ring Kit, Sppt	1
▲	6	9014260	(000000-)	Pop Valve	1

Fig. 16 - ec-H20 Module Assembly Breakdown, 9007882

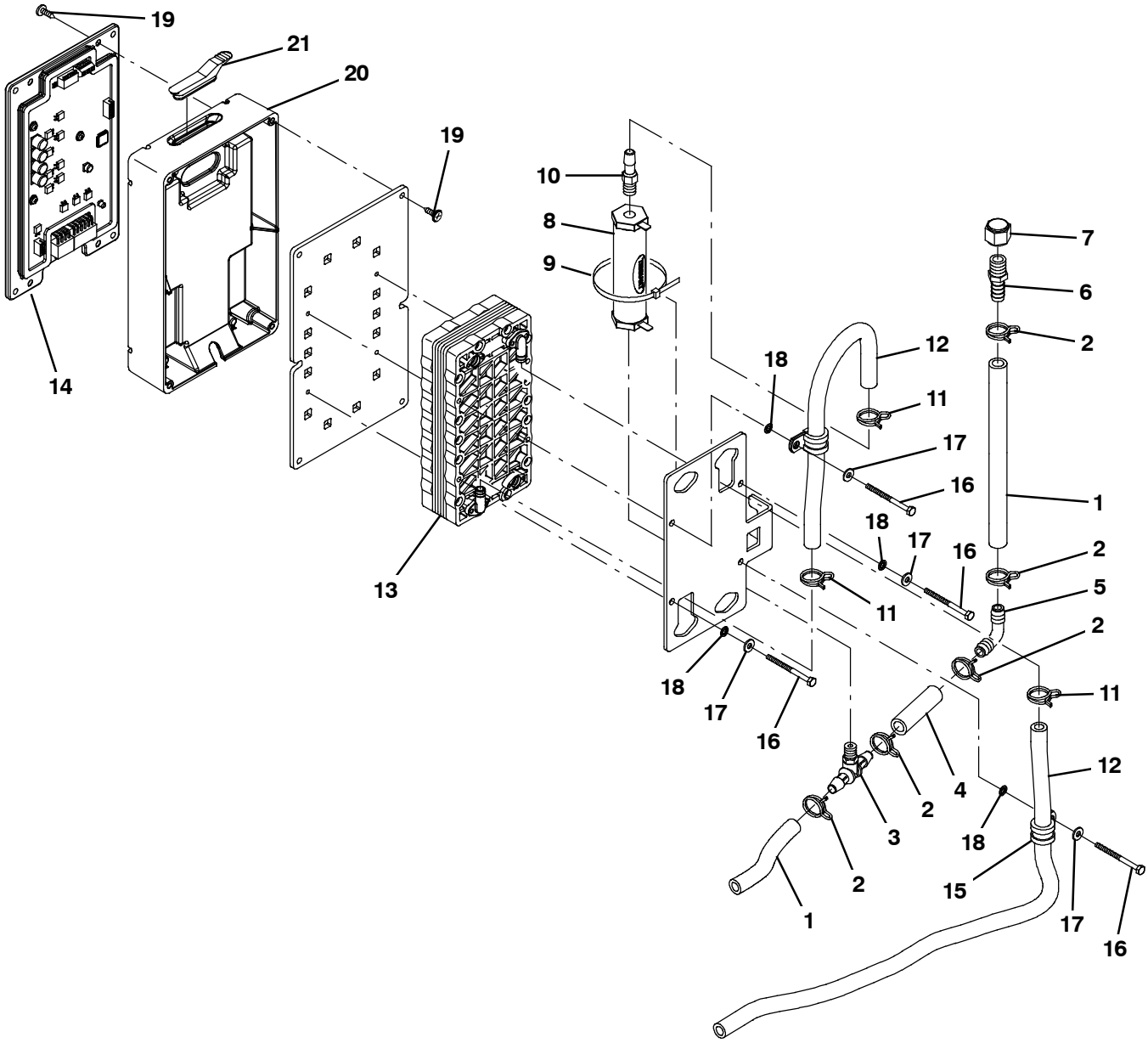

356035

Fig. 16 - ec-H20 Module Assembly Breakdown, 9007882

	Ref.	Part No.	Serial Number	Description	Qty.
▽		9007882	(000000-)	Module Kit, Replmt [Ec-H20]	1
▲	1	1014974	(000000-)	Hose, Afmkt, Pvc, Brd, 0.38id, 02ft, Clr	2
▲	2	607775	(000000-)	Clamp, Hose, Wir, .63 - .66, Blk	5
▲	3	1060517	(000000-)	Fitting, Plstc, Tee, Bm06/Pm02/Bm06	1
▲	4	1014971	(000000-)	Hose, Afmkt, Pvc, Brd, 0.38id, 01ft, Clr	1
▲	5	20951	(000000-)	Fitting, Plstc, E90, Bm06/Bm06	1
▲	6	150540	(000000-)	Fitting, Plstc, Str, Bm06/Pm04	1
▲	7	1005435	(000000-)	Fitting, Plstc, Pipe, Cap, Pf04	1
▲	8	1038159	(000000-)	Electrode, Cylindrical	1
▲	9	44961	(000000-)	Tie, Cable, Nyl, 14.5l .30w 4.0 Max D	1
▲	10	1060695	(000000-)	Fitting, Plstc, Str, Pm02/Bm05	1
▲	11	1053464	(000000-)	Clamp, Hose, Wir, .52 - .56, Yel	3
▲	12	1052336	(000000-)	Hose, Afmkt, PVC, Brd, 0.31Id, 03Ft, Clr	1
▲	13	1057637	(000000-)	Electrode, 5 Plate, High Flow	1
▲	14	9007883	(000000-)	Controller Kit, Replmt [Ec-H20]	1
▲	15	1016354	(000000-)	Clamp, Cable, Ss, 0.50d X 0.50w [Insul]	2
▲	16	32509	(000000-)	Screw, Hex, M4 X 0.70 X 50, Ss	4
▲	17	41579	(000000-)	Washer, Flat, 08, Ss	4
▲	18	02938	(000000-)	Washer, Lock, Int, 08, Ss	4
▲	19	1018155	(000000-)	Screw, Pan, Phl, M5 X 0.80 X 16, Tcut,Ss	8
▲	20	1037032	(000000-)	Housing, Bottom	1
▲	21	1054776	(000000-)	Grommet, Blind	1

Fig. 17 - Seat Breakdown, 1072456

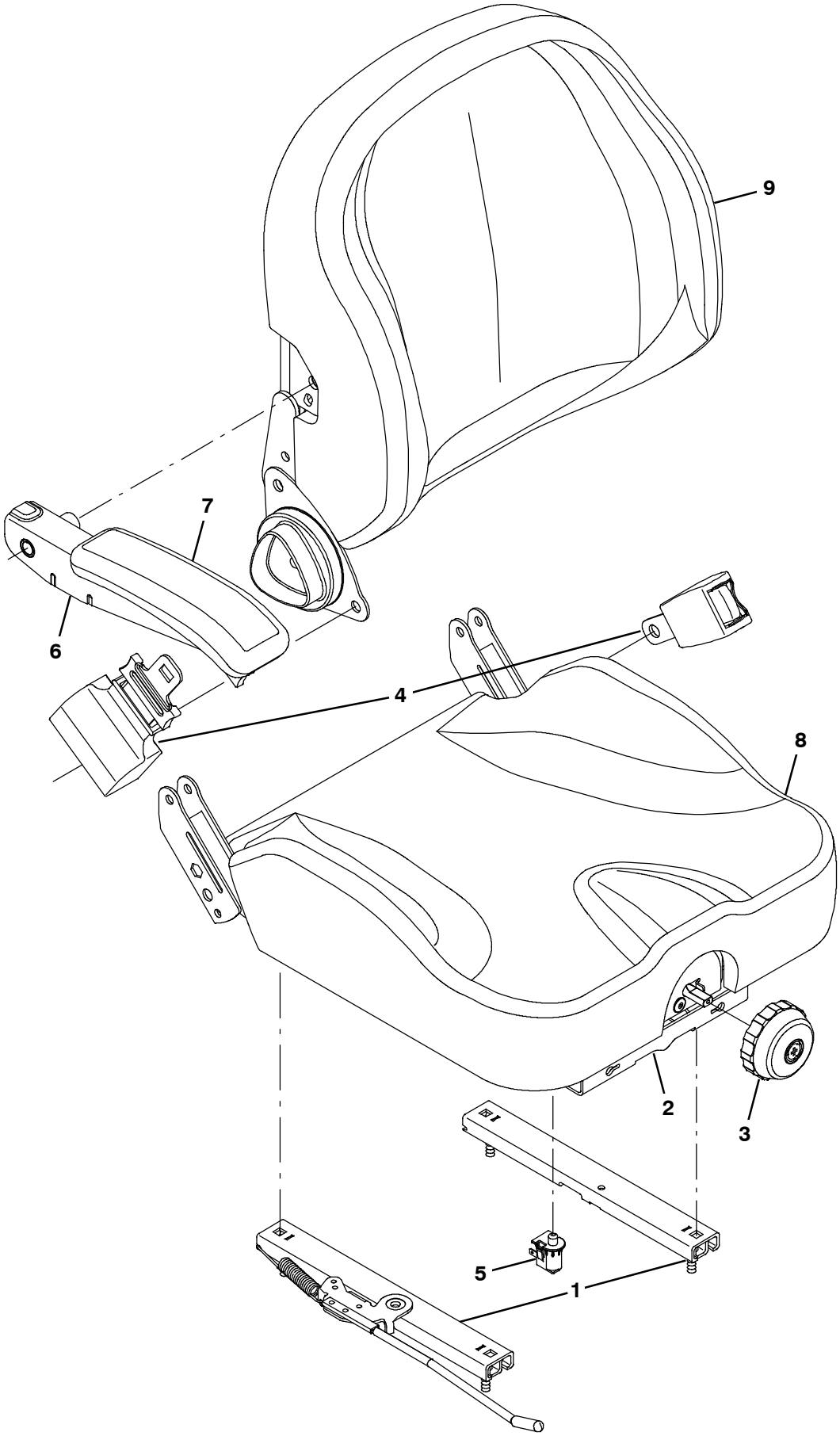

356526

Fig. 17 - Seat Breakdown, 1072456

	Ref.	Part No.	Serial Number	Description	Qty.
▽		1072456	(000000-)	Seat	1
▲	1	9012585	(000000-)	Track Assy, Slide	1
▲	2	9012587	(000000-)	Bellows, Seat	1
▲	3	9012589	(000000-)	Knobs, Adjmt, Weight	1
▲	4	9012590	(000000-)	Seatbelt	1
▲	5	9012591	(000000-)	Switch, Seat	1
▲	6	9012592	(000000-)	Armrest	1
▲	7	9012593	(000000-)	Pad, Armrest	1
▲	8	9012594	(000000-)	Cover, Cushion	1
▲	9	9012595	(000000-)	Cover, Backrest	1

Fig. 18 - FaST Injector Assembly Breakdown, 9008868

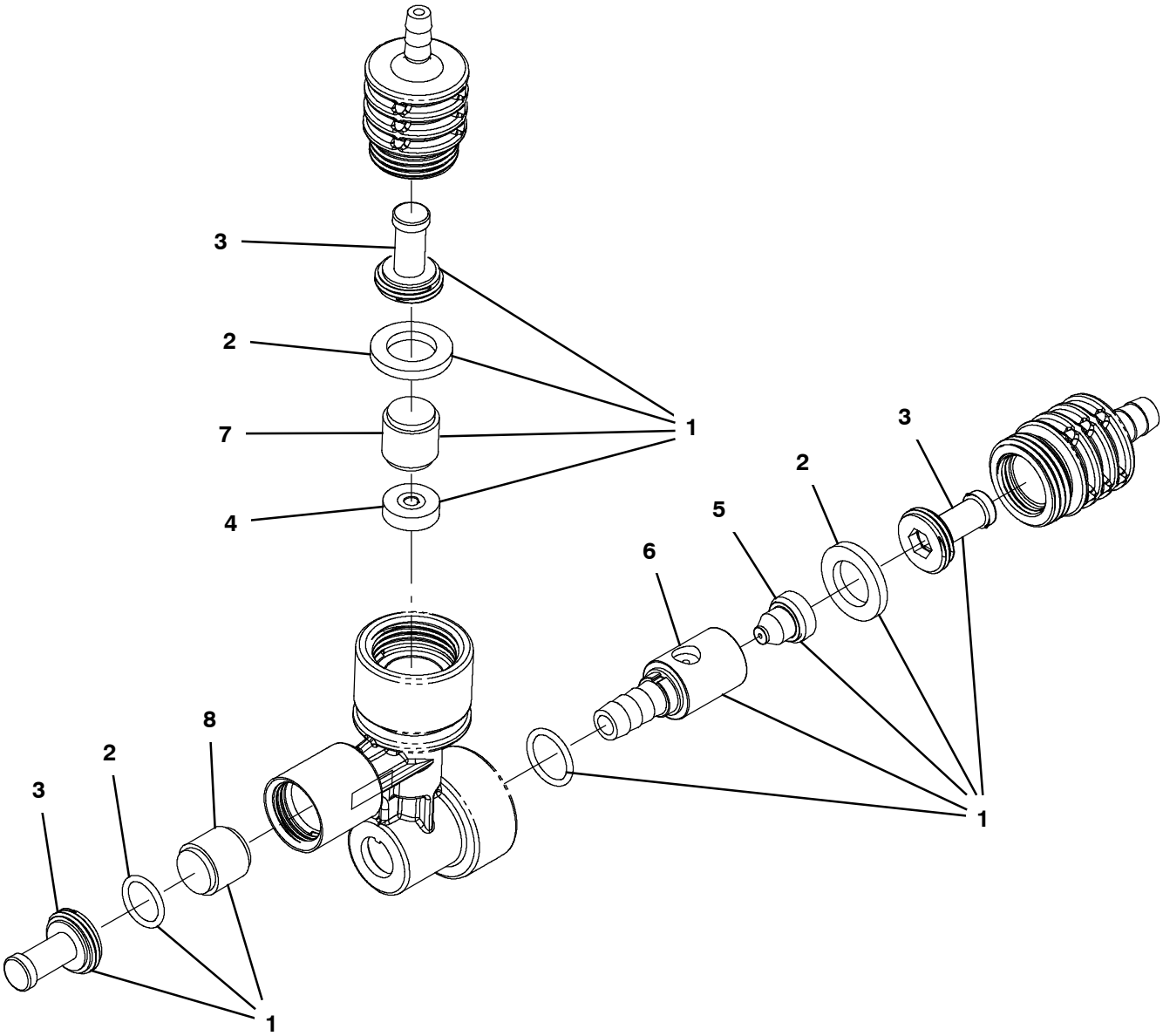

356271

	Ref.	Part No.	Serial Number	Description	Qty.
▽		9008868	(000000-)	FaST Kit, Injector [M20/T20/m30 FaST III}	1
▲▽	1	9008757	(000000-)	FaST Kit, Ci [inj Rebld, M30/M20 III]	1
▲▲	2	9008848	(000000-)	FaST Kit, Seal, injector, Ci [FaST III]	1
▲▲	3	9003009	(000000-)	FaST Kit, Ci, Injector Filters[FaST Ii+]	1
▲▲	4	1059878	(000000-)	Plate Assy, Orifice, 0.0105Id, Green	1
▲▲	5	1042710	(000000-)	Plug, Orifice, 0.060, Ss [FaST Ii+]	1
▲▲	6	1059234	(000000-)	Insert, :Lrg [Venturi, FaST III]	1
▲▲	7	1030444	(000000-)	Valve, Check, 0002psi [FaST Ii+]	1
▲▲	8	1030441	(000000-)	Valve, Check, 0005psi [FaST Ii+]	1

SECTION 5

Contents **Page**

Fig. 1 - Cylinder Head and Valves Group . . . 5-2
Fig. 2 - Crankshaft and Pistion Group 5-4
Fig. 3 - Oil and Water Pump Group 5-6
Fig. 4 - Oil Pan and Filter Group 5-8
Fig. 5 - Manifold Group 5-9
Fig. 6 - Camshaft Group 5-10
Fig. 7 - Ignition Group 5-12

Fig. 1 - Cylinder Head and Valves Group

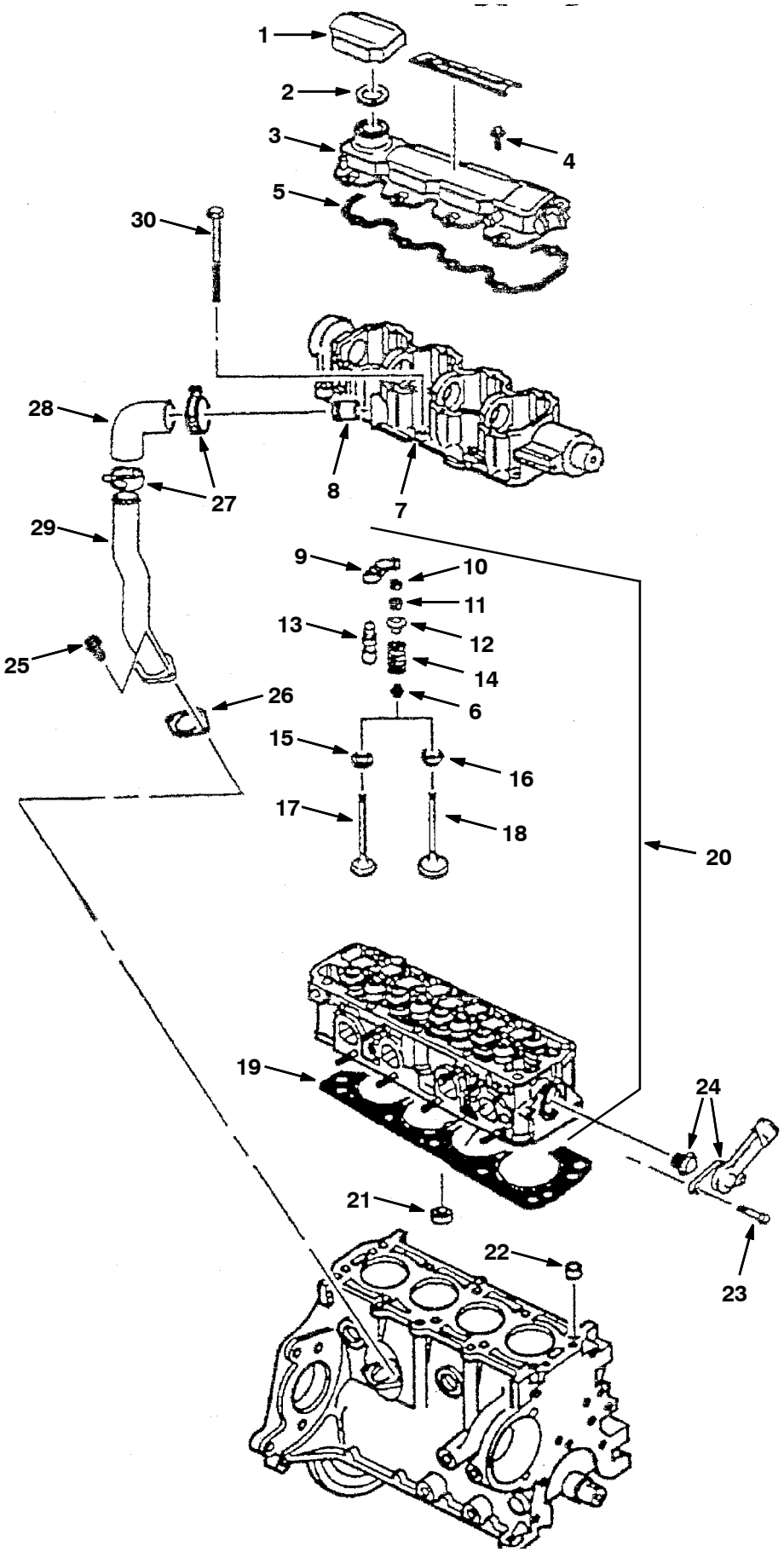

G, LP

Fig. 1 - Cylinder Head and Valves Group

Ref.	Part No.	Description	Qty.
1	372574	Cap, Filler, Oil, W/ Org	1
2	372573	Seal, Org, Cap	1
3	372007	Cover, Hsng, Camshaft	1
4	371990	Bolt, Camshaft Cover	8
5	372008	Gasket, Cover, Hsng, Camshaft	1
6	9003345	Seal, Seat, Valve	8
7	372018	Housing, Camshaft	1
8	372019	Tube [Pcv]	1
9	372030	Arm, Rocker, Valve	8
10	372031	Seat, Spring, Valve, 0.333	8
11	372033	Key, Valve Stem	16
12	372034	Cap, Spring, Valve	4
13	372035	Screw, Adj, Valve, Hyd	8
14	372036	Spring, Valve	8
15	372037	Seat, Rotator, Valve	4
16	372032	Seat, Spring, Valve	4
17	372038	Valve, Exhaust	4
18	372039	Valve, Intake	1
19	372022	Gasket, Head, Cyl	1
20	372023	Head, Cyl	1
21	372024	Seat, Valve, Exhaust, [+0.2mm]	4
21	372025	Seat, Valve, Exhaust, Std	4
21	372026	Seat, Valve, Exhaust, [+0.4mm]	4
21	372027	Seat, Valve, Intake, Std	4
21	372028	Seat, Valve, Intake, [+0.2mm]	4
21	372029	Seat, Valve, Intake, [+0.4mm]	4
22	371999	Pin, Lock, Cyl Head, 14mm X 17mm	2
23	372048	Bolt, Hsng, Thermostat	2
24	372047	Thermostat, W/ Hsng And Seal	1
25	371957	Bolt, Tube [Pvc], M6 X 1 X 15	2
26	371958	Gasket, Tube [Pcv]	1
27	371954	Clamp, Hose, 1.75 [Pcv]	2
28	371955	Hose [Pcv]	1
29	371956	Tube [Pcv]	1
30	372882	Bolt, Head. Cyl	10

Fig. 2 - Crankshaft and Pistion Group

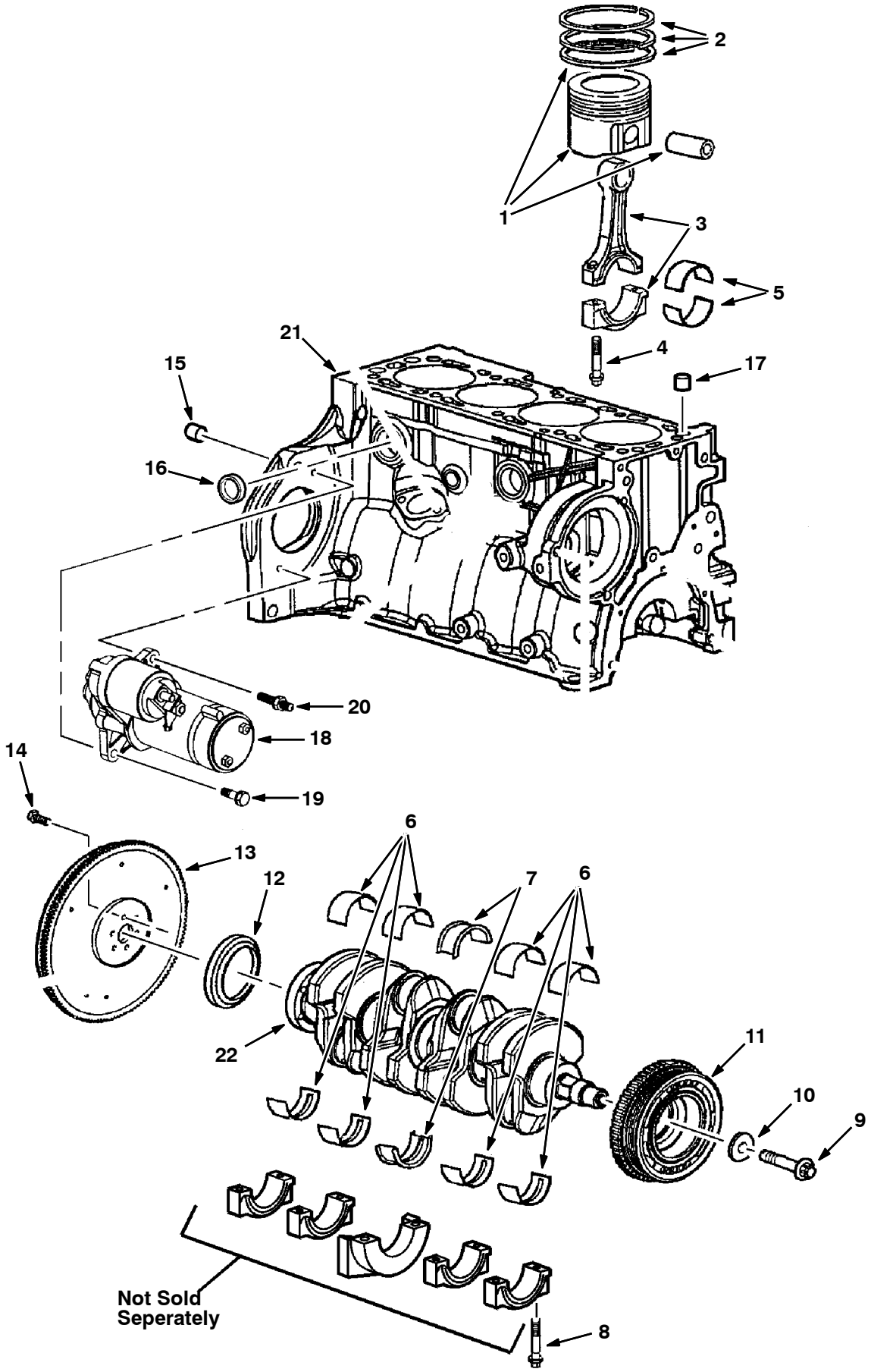

G, LP

Fig. 2 - Crankshaft and Piston Group

	Ref.	Part No.	Description	Qty.
▽	1	371932	Piston, W/ Pin, Std	1
▲	2	371931	Ring Kit, Piston, Std 78.95- 79.02mm	4
	3	371934	Rod, Connecting, M08 X 45	4
	4	371935	Bolt, Connecting Rod	8
	5	371933	Bearing Kit, Rod, Connecting, Std	1
	6	371966	Bearing Kit, Cshft, 1.995- 2.001mm (Brown Blue)	4
	6	371967	Bearing Kit, Cshft, 2.120- 2.126mm	4
	6	371968	Bearing Kit, Cshft, 2.114- 2.120mm	4
	6	371969	Bearing Kit, Cshft, 1.989- 1.995mm (Brown)	4
	7	371970	Bearing Kit, Cshft, 1.989- 1.995mm (Green Blue)	4
	7	371971	Bearing Kit, Cshft, 1.995- 2.001mm (Green)	4
	8	371946	Bolt, M10 X 1.50 X 75mm	10
	9	384961	Bolt, Pulley, Cshft	1
	10	371937	Washer, Sheave, Cshft	1
	11	371936	Sheave, Cshft	1
	12	371945	Seal, Oil, Cshft	1
▽	13	371979	Flywheel	1
▲		371977	Gear, Ring, Starter	1
	14	371976	Bolt, Flywheel	6
	15	371978	Pin, Lock, Transmission	2
	16	371942	Plug, Hole, Coolant, Eng Block	6
	17	371999	Pin, Lock, Cyl Head, 14mm X 17mm	2
	18	384963	Starter, 12vdc [Delco] (Mar. 2006 and Newer)	1
	19	384964	Bolt, M08 X 1.25 X 25mm	1
	20	371964	Stud, Starter, M08 X 1.25	1
	21	371944	Block, Short, Eng, W/ Piston & Ring	1
	22	371965	Crankshaft	1

Fig. 3 - Oil and Water Pump Group

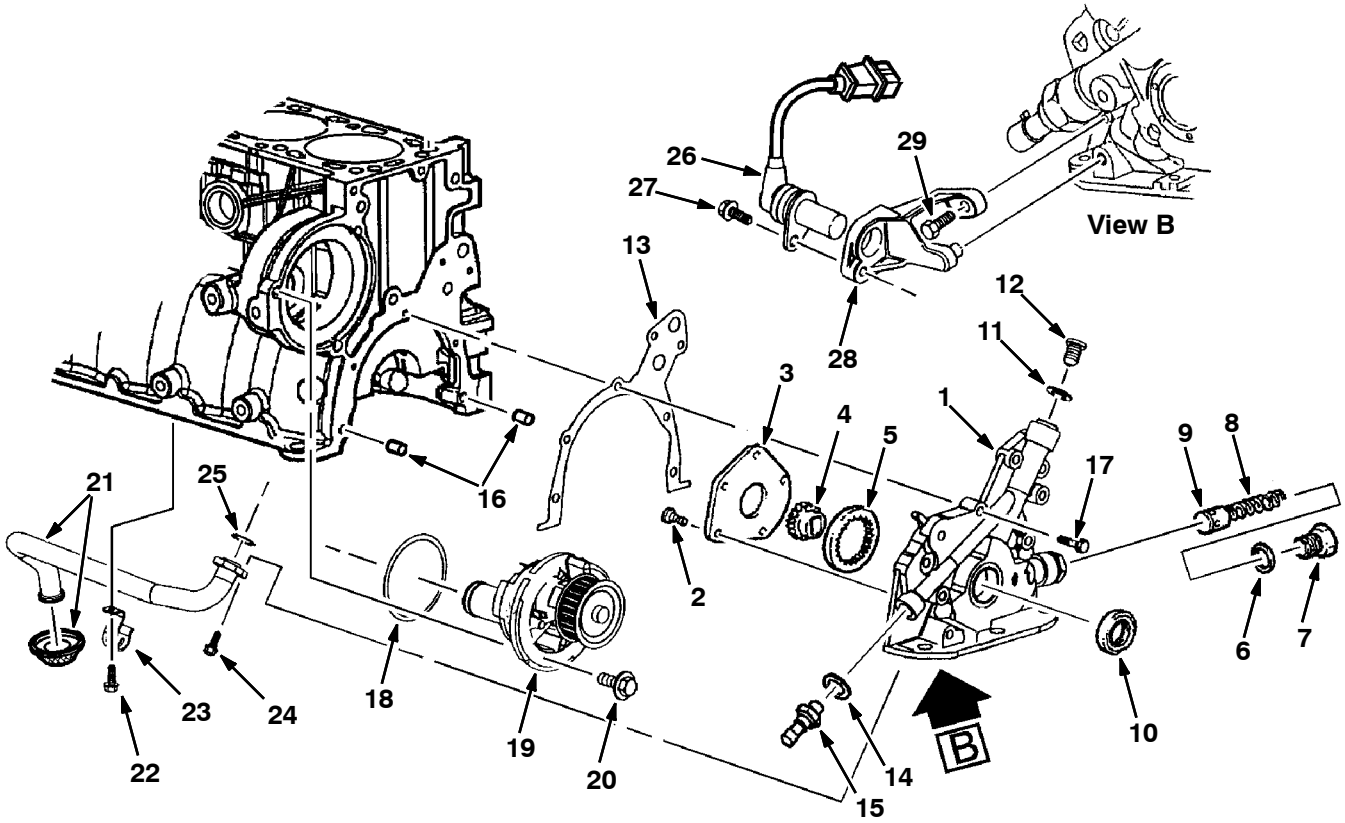

G, LP

Fig. 3 - Oil and Water Pump Group

	Ref.	Part No.		Description	Qty.
▽	1	372572		Pump, Oil	1
▲	2	371947		Bolt, Cover, Oil Pump, M6 X 14	5
▲	3	371948		Cover, Pump, Oil	1
▲	4	371949		Gear, Ring, Drive, Oil Pump	1
▲	5	371950		Gear, Drive, Oil Pump	1
▲	6	371998		Gasket, Plug, Relief Valve,Oil Press	1
▲	7	371994		Plug, Bore, Valve, Relief, Oil Press	1
▲	8	371993		Spring, Valve, Relief, Oil Press	1
	9	371997		Valve, Relief, Oil Press	1
	10	372005		Seal, Org, Oil Pump	1
	11	371951		Seal, Org, Hsng, Oil Pump	1
	12	371952		Plug, Hsng, Oil Pump	1
	13	371984		Gasket, Pump, Oil	1
	14	371987		Seal, Org, Press Switch / Drain Plug	1
	15	371996	3	Switch, Indicator, Oil Press	1
	15	9008197	4	Switch, Indicator, Oil Press [2010]	1
	16	371983		Pin, Ring, Lock, Hsng, Water Pump	2
	17	371986		Bolt, Pump, Oil	6
	18	372567		Seal, Org, Water Pump	1
	19	371981		Pump, Water [Gm]	1
	20	371980		Bolt, Cover, Water Pump	3
	21	372001		Screen, Oil Pump, W/ Suc Pipe	1
	22	371991		Bolt, Bracket,Screen,Oil Pump,M6x1x1	1
	23	372000	1	Bracket, Screen, Oil Pump	1
	23	384966	2	Bracket, Screen, Oil Pump	1
	24	371990		Bolt, Oil Pump Screen/Camshaft Cover	2
	25	371988		Seal, Ring, Pipe, Suc, Oil Pump	1
	26	372002		Sensor, Position, Cshft	1
	27	384968		Bolt, Bracket, Sensor,Cshft Position	1
	28	372003		Bracket, Sensor, Position, Cshft	1
	29	372004		Bolt, Sensor, Position, Cshft	3

1 Serial Number (000000- xxxxxx)

2 Serial Number (xxxxxx-)

3 Tennant Serial number (000000- 001320)

4 Tennant Serial number (001321-)

Fig. 4 - Oil Pan and Filter Group

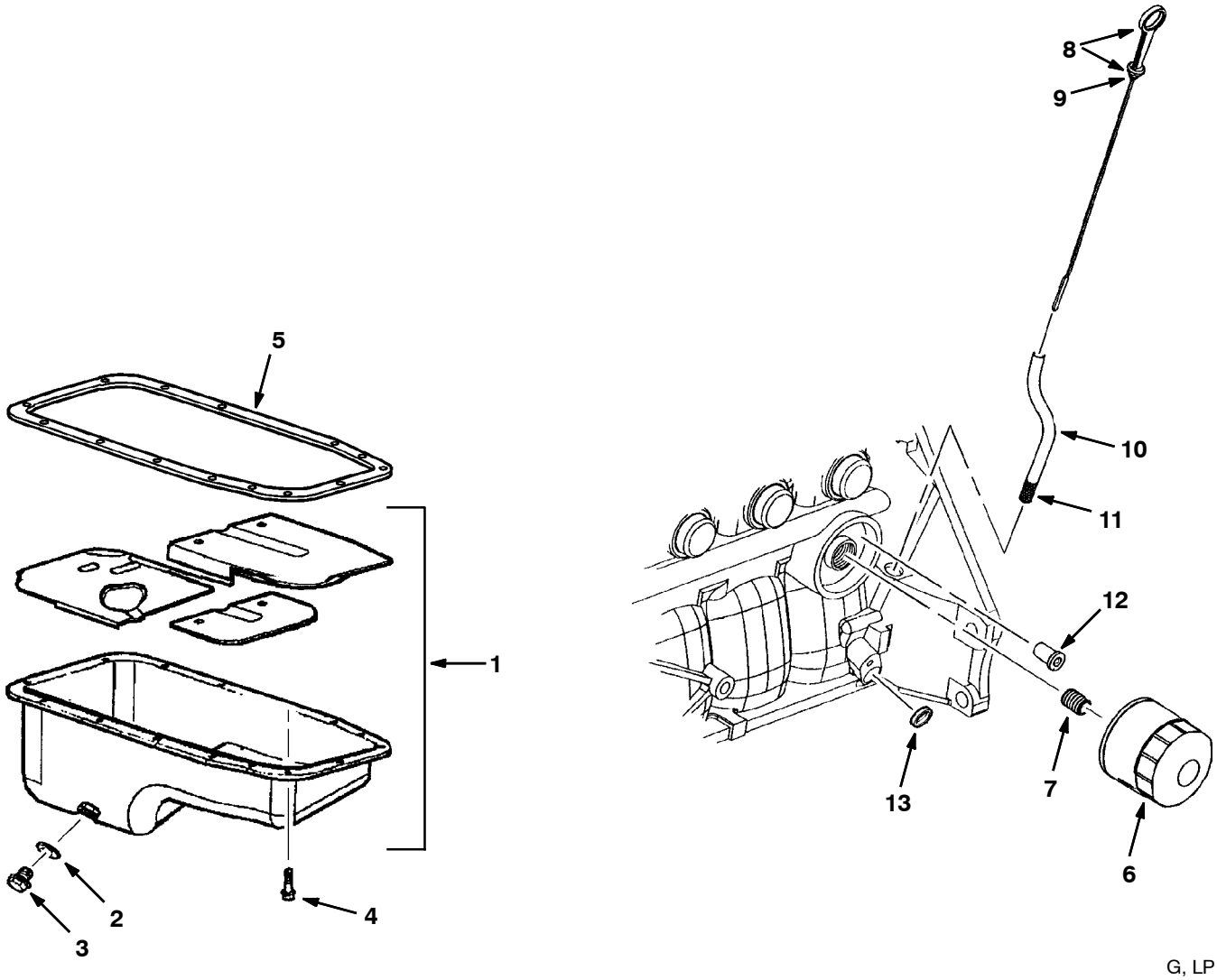

G, LP

	Ref.	Part No.	Description	Qty.
▽	1	371960	Pan, Oil, W/ Baffle / Plug / Seal	1
▲	2	371987	Seal, Org, Press Switch / Drain Plug	1
▲	3	371992	Plug, Drain, Oil Pan, M14 X 1.5 X 12	1
	4	384962	Bolt, Pan, Oil	15
	5	371959	Gasket, Pan, Oil	1
	6	371972	Element, Fltr, Oil, Eng, Spin- On (GM)	1
	7	371973	Fitting, Fltr, Oil	1
▽	8	372560	Dipstick, Oil	1
▲	9	371995	Seal, Org, Cap, Fltr, Oil	1
	10	371940	Tube, Ds	1
	11	371941	Sealant, Tube, Ds	1
	12	371975	Valve, By- Pass, Oil Fltr	1
	13	371943	Plug, Hole, Core, Eng Block	1

Fig. 5 - Manifold Group

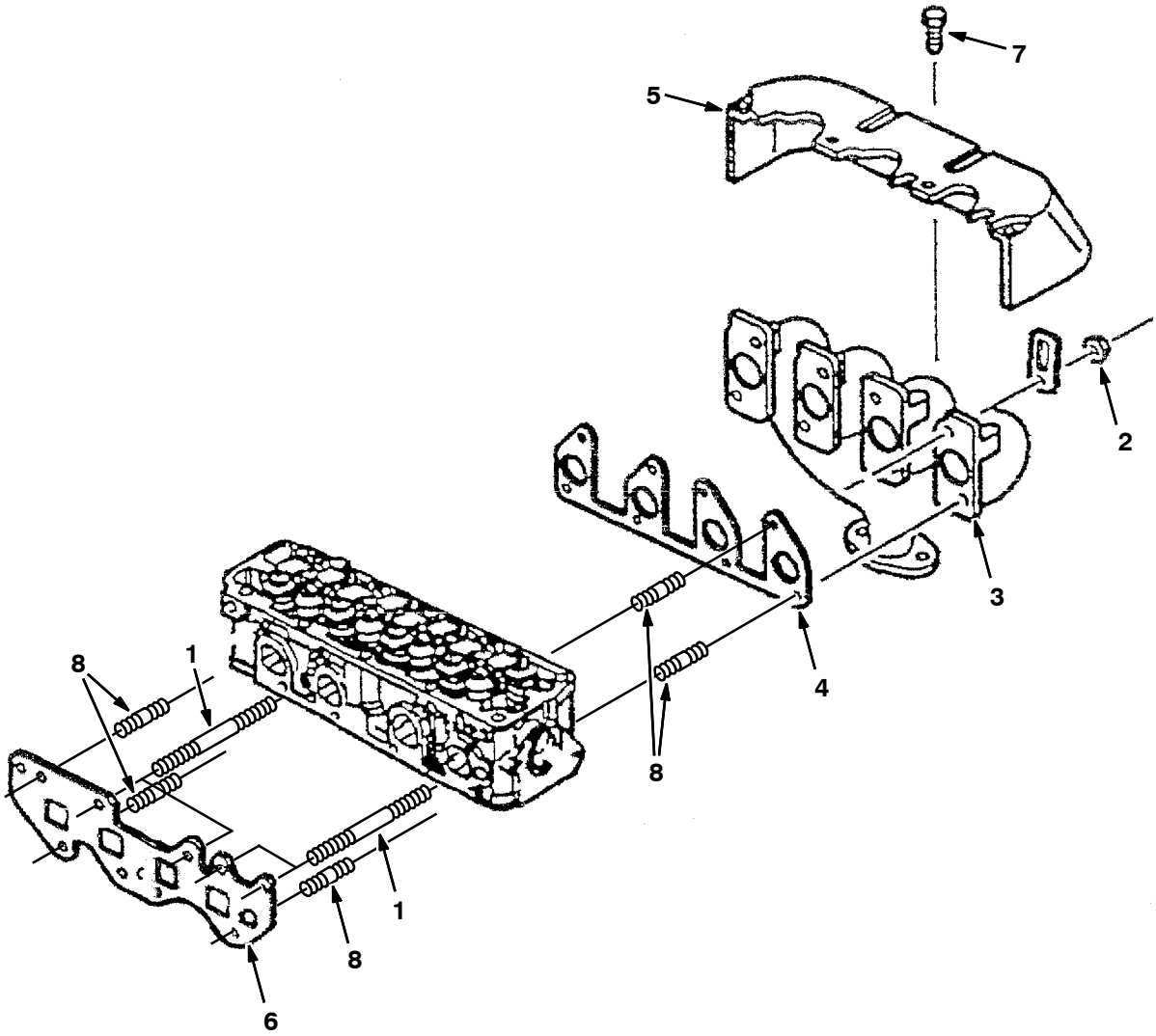

G, LP

Ref.	Part No.	Description	Qty.
1	372021	Stud, Manifold, M8 X 96	4
2	372049	Nut, Manifold, Exhaust, M8 X 1.25	8
3	372050	Manifold, Exhaust	1
4	372051	Gasket, Manifold, Exhaust	1
5	372052	Shield, Manifold, Exhaust	1
6	372053	Gasket, Manifold, Intake	1
7	372066	Bolt, Shield, Manifold, Exhaust	5
8	372020	Stud, Manifold, M8 X 28	13

Fig. 6 - Camshaft Group

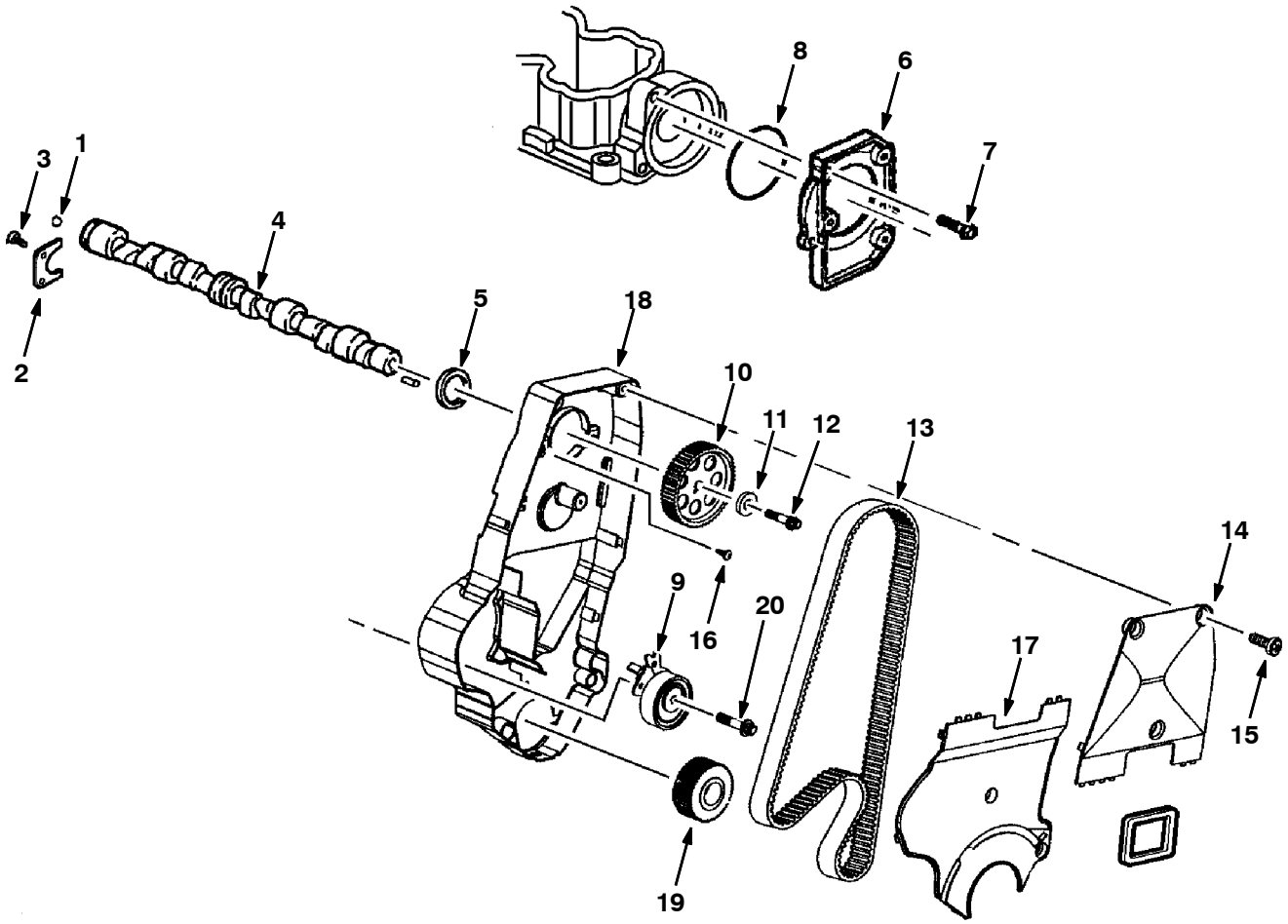

G, LP

Fig. 6 - Camshaft Group

Ref.	Part No.	Description	Qty.
1	372009	Ball, Camshaft	1
2	372010	Retainer, Camshaft	1
3	372011	Bolt, Retainer, Camshaft, M6 X 1 X 16	2
4	372012	Camshaft	1
5	372013	Seal, Org, Bolt, Cover, Camshaft Hsng	1
6	372014	Cover, Hsng, Camshaft	1
7	372015	Bolt, Cover, Camshaft, M6 X 1 X 22	3
8	372016	Seal, Org, Bolt, Cover, Camshaft Hsng	1
9	9004674	Pulley, Tension, Belt, Timing	1
10	372040	Sprocket, Camshaft	1
11	372017	Washer, Sprkt, Camshaft	1
12	372041	Bolt, Sprocket, Camshaft, M10x1.25x60	1
13	1057029	Belt, Timing	1
14	372043	Cover, Belt, Timing, Upper Front	1
15	371961	Bolt, Eng Cover, M6 X 1 X 13	6
16	372046	Bolt, Tensioner, Timing Belt,M8x1.25x48	1
17	372044	Cover, Belt, Timing, Lower Front	1
18	372616	Housing, Camshaft	1
19	388552	Sprocket, Crankshaft	1
20	9004675	Bolt, Tensioner [GM]	1

Fig. 7 - Ignition Group

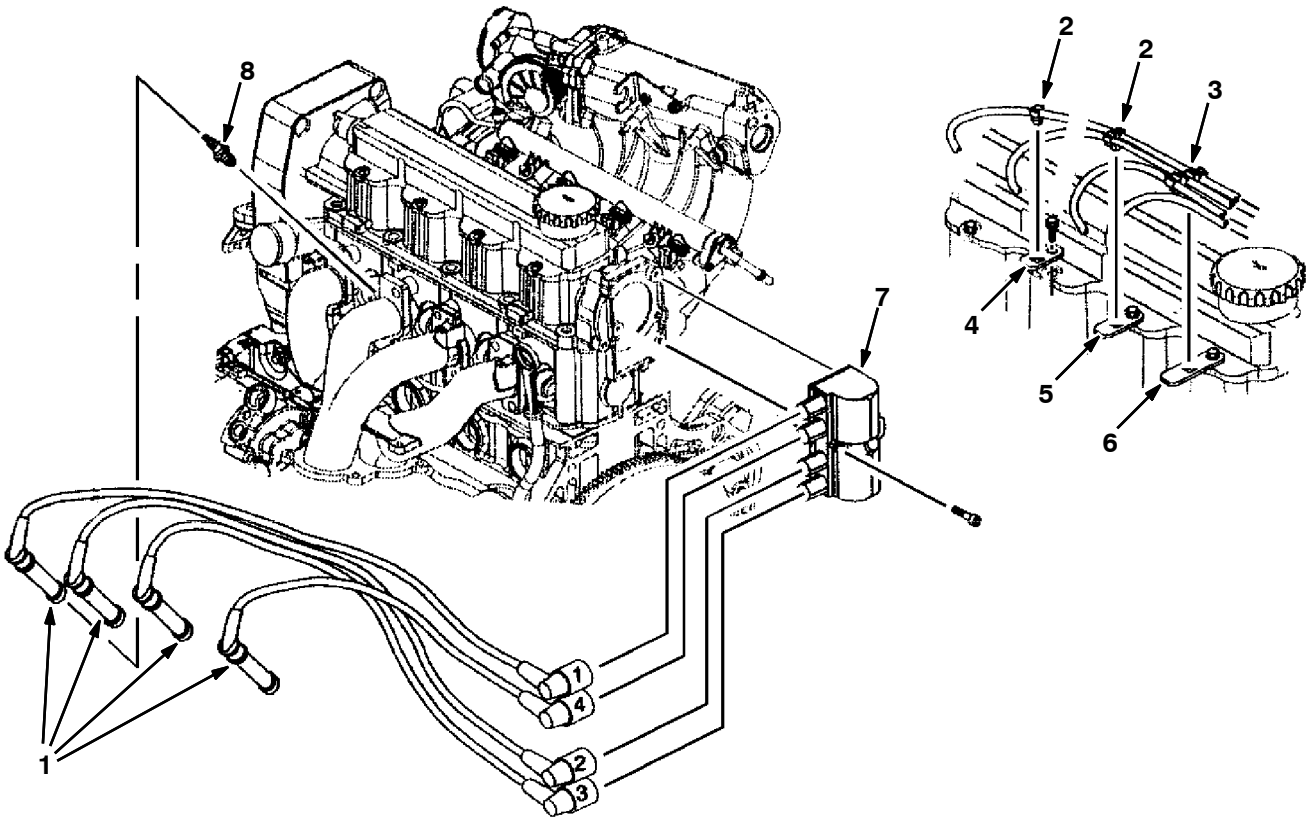

G, LP

Ref.	Part No.	Description	Qty.
1	372603	Wire Set, Sparkplug [1.6l]	1
2	372055	Retainer, Sparkplug, 2 Way	2
3	372056	Retainer, Sparkplug, 3 Way	1
4	372057	Bracket, Retaining, Wire, Sparkplug	1
5	372058	Bracket, Retaining, Wire, Sparkplug	1
6	372059	Bracket, Retaining, Wire, Sparkplug	1
7	372060	Coil, Ignition	1
8	372575	Sparkplug	4

SECTION 6

Contents **Page**

Fig. 1 - Cylinder Block Group 6-2
Fig. 2 - Rocker Cover Group 6-4
Fig. 3 - Cylinder Head Group 6-5
Fig. 4 - Front Cover and Oil Pan Group 6-6
Fig. 5 - Camshaft and Valve Group 6-8
Fig. 6 - Piston and Crankshaft Group 6-10
Fig. 7 - Balancer Group 6-11
Fig. 8 - Oil Pump and Pressure Switch Group 6-12
Fig. 9 - Water Pump Group 6-13
Fig. 10 - Intake Manifold Gasket Group . . . 6-14
Fig. 11 - Exhaust Manifold Gasket Group . . 6-16
Fig. 12 - Fan Tensioner and Pump Mount Group 6-17
Fig. 13 - Flywheel Group 6-18
Fig. 14 - Ignition Coil and Spark Plug Group 6-19
Fig. 15 - Starter / Alternator Group 6-20
Fig. 16 - Remote Oil Filter Group 6-21
Fig. 17 - Coolant Group 6-22
Fig. 18 - DSR Coolant Group, LPG Engine 6-23
Fig. 19 - Electrical Group 6-24
Fig. 20 - Fuel Rail Group, Gasoline Engine 6-26
Fig. 21 - Throttle Body Group, Gasoline Engine 6-27
Fig. 22 - Throttle Body Group, LPG Engine 6-28
Fig. 23 - Vaporizer Group, LPG Engine . . . 6-29
Fig. 24 - Electronic Pressure Regulator (EPR) Group, LPG Engine 6-30

Fig. 1 - Cylinder Block Group

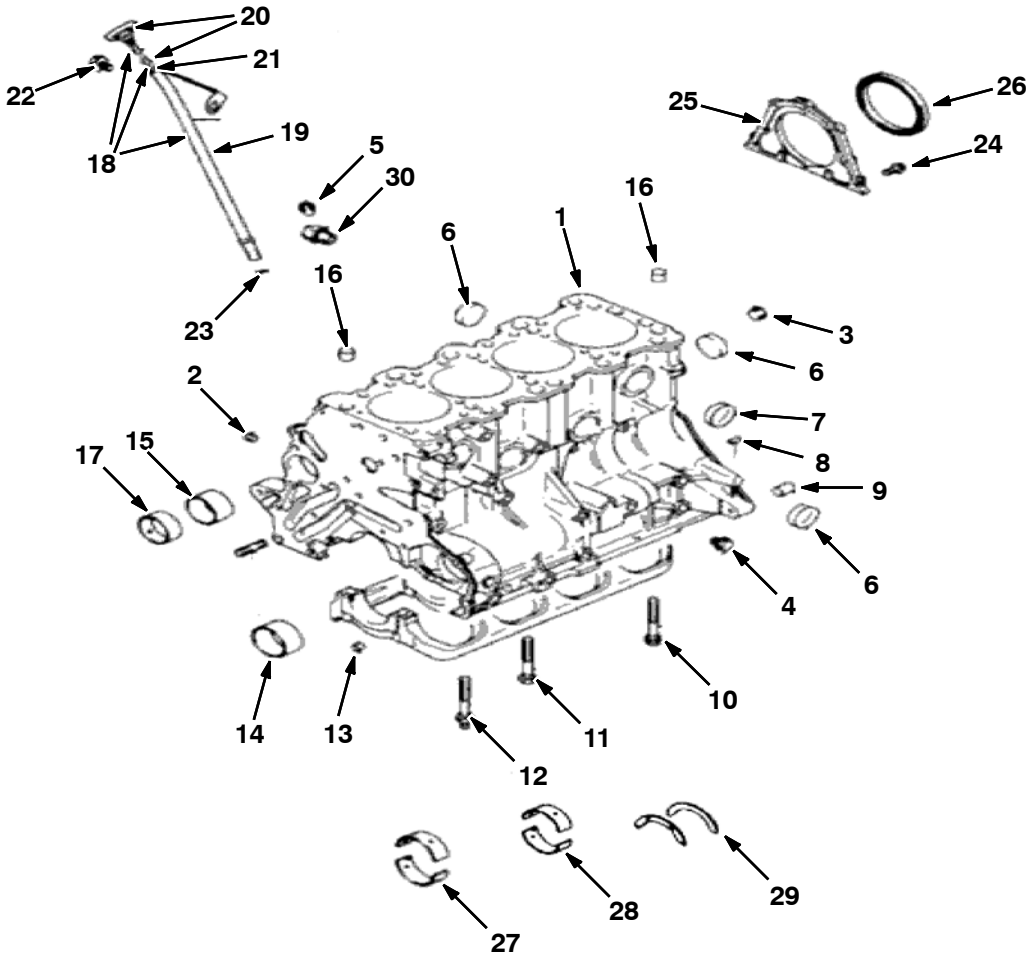

Fig. 1 - Cylinder Block Group

	Ref.	Part No.	Description	Qty.
▽	1	9010419	Block Assy, Cylinder	1
▲	2	9010420	Plug, Taper	2
▲	3	9010421	Plug, Taper	1
▲	4	9010422	Plug	1
▲	5	9010423	Plug, Taper	1
▲	6	9010424	Cap, Seal	7
▲	7	9010425	Cap, Seal	2
▲	8	9010426	Pin, Dowel	2
▲	9	9010427	Bushing, Knock	2
▲	10	9010428	Bolt, Cap, Bearing	2
▲	11	9010429	Bolt, Cap, Bearing	7
▲	12	9010430	Bolt, Cap, Bearing	1
▲	13	9010431	Bushing	2
▲	14	9010432	Bearing, Std, Balancer	1
▲	14	9010433	Bearing, Oversize [1.0]	1
▲	15	9010434	Bearing, Std, Balancer	1
▲	15	9010435	Bearing, Oversize [1.0]	1
▲	16	9010436	Bushing, Knock	2
▲	17	9010458	Bearing, Shaft, Std, Balancer	1
▲	17	9010459	Bearing, Shaft, Balancer [Ovrsz]	1
▽	18	9010439	Dipstick Assy, Guage	1
▲	19	9010440	Dipstick, Guage, Guide	1
▲▽	20	9010437	Dipstick, Rod, Guage	1
▲▲	21	9010438	O- Ring	1
	22	9010441	Bolt, Flange	1
	23	9010442	O- Ring	1
	24	9010444	Bolt, Flange	5
	25	9010445	Seal, Case, Oil, Rear	1
	26	9010446	Seal, Oil	1
	27	9010447	Bearing, Cshft [Green Std 1,2,4,5]	4
	27	9010448	Bearing, Cshft [Yellow Std 1,2,4,5]	4
	27	9010449	Bearing, Cshft[No Color Std 1,2,4,5]	4
	27	9010450	Bearing, Cshft [Lan Std 1,2,4,5]	4
	27	9010451	Bearing, Cshft [Red Std 1,2,4,5]	4
	28	9010452	Bearing, Cshft [Green Std 3]	1
	28	9010453	Bearing, Cshft [Yellow Std 3]	1
	28	9010454	Bearing, Cshft [No Color Std 3]	1
	28	9010455	Bearing, Cshft [Lan Std 3]	1
	28	9010456	Bearing, Cshft [Black Std 3]	1
	29	9010457	Bearing, Thrust, Cshft	1
	30	9010443	Drain, Water, Joint	1

Fig. 2 - Rocker Cover Group

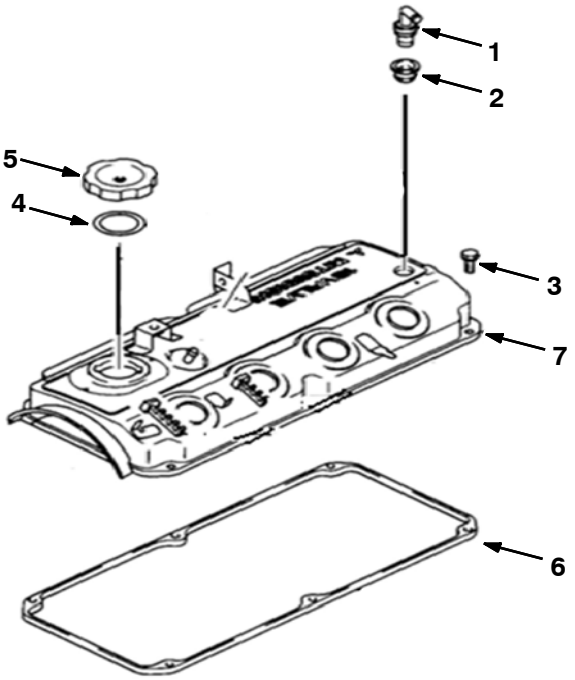

Ref.	Part No.	Description	Qty.
1	9010460	Valve, Pcv	1
2	9010461	Valve, Gasket, Pcv	1
3	9010462	Bolt, Rocker, Cover	6
4	9010463	Gasket, Oil, Filler, Cap	1
5	9010464	Cap, Oil, Filler	1
6	9010465	Gasket, Cover, Rocker	1
7	9010466	Cover Assy, Rocker	1

Fig. 3 - Cylinder Head Group

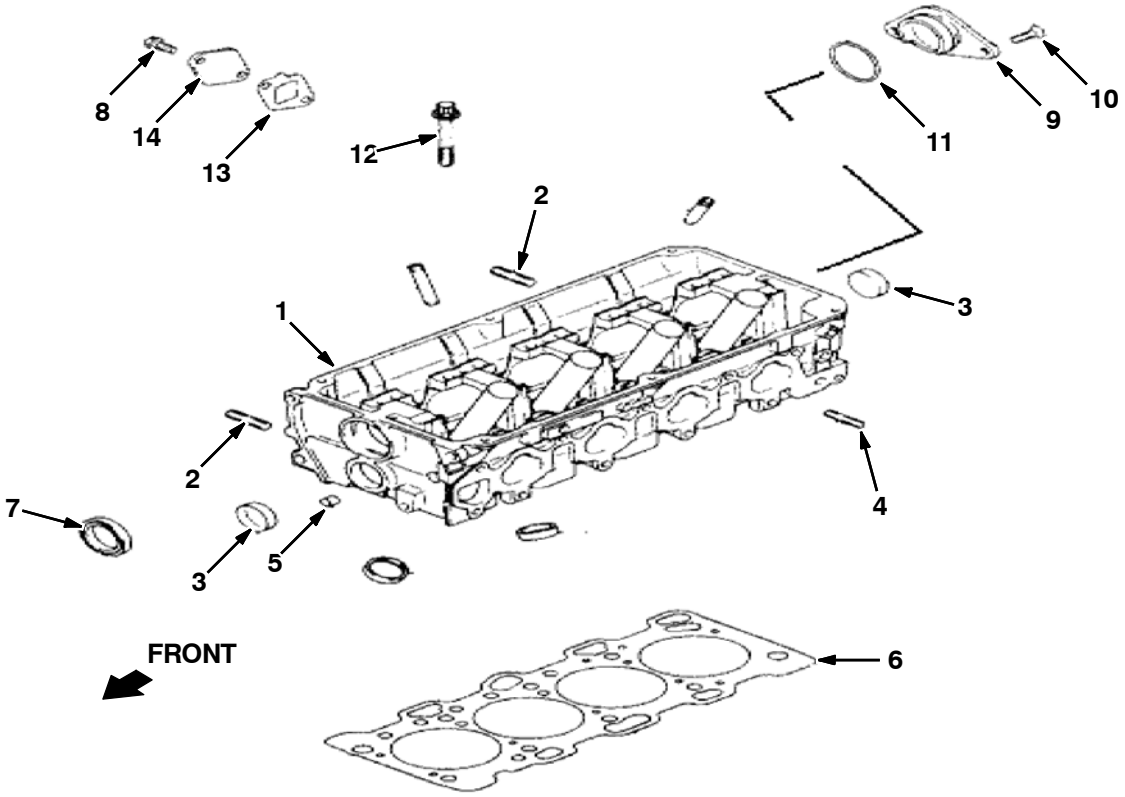

	Ref.	Part No.		Description	Qty.
▽	1	9010467	1	Head Assy, Cylinder	1
▲	2	9010473		Stud	2
▲	3	9010469		Seal, Cap	2
▲	4	9010470		Stud	3
▲	5	9010431		Bushing	2
▽	1	9014162	2	Head Kit, Cyl [Mitsubishi 2015 12mm]	1
▲	2	9010473		Stud	2
▲	3	9010469		Seal, Cap	2
▲	4	9010470		Stud	3
▲	5	9010431		Bushing	2
	6	9010468		Gasket, Cylinder, Head	1
	7	9010471		Seal, Cam Shaft, Front	1
	8	9010441		Bolt, Flange	2
	9	9010480		Thurst, Case	1
	10	9010481		Screw	2
	11	9010482		O- Ring	1
	12	9010484		Cylinder Assy, Head, Bolt	10
	13	9010483		Gasket	1
	14	9010485		Cover	1

1 Serial Number (004000- 004582)

2 Serial Number (004583-)

Fig. 4 - Front Cover and Oil Pan Group

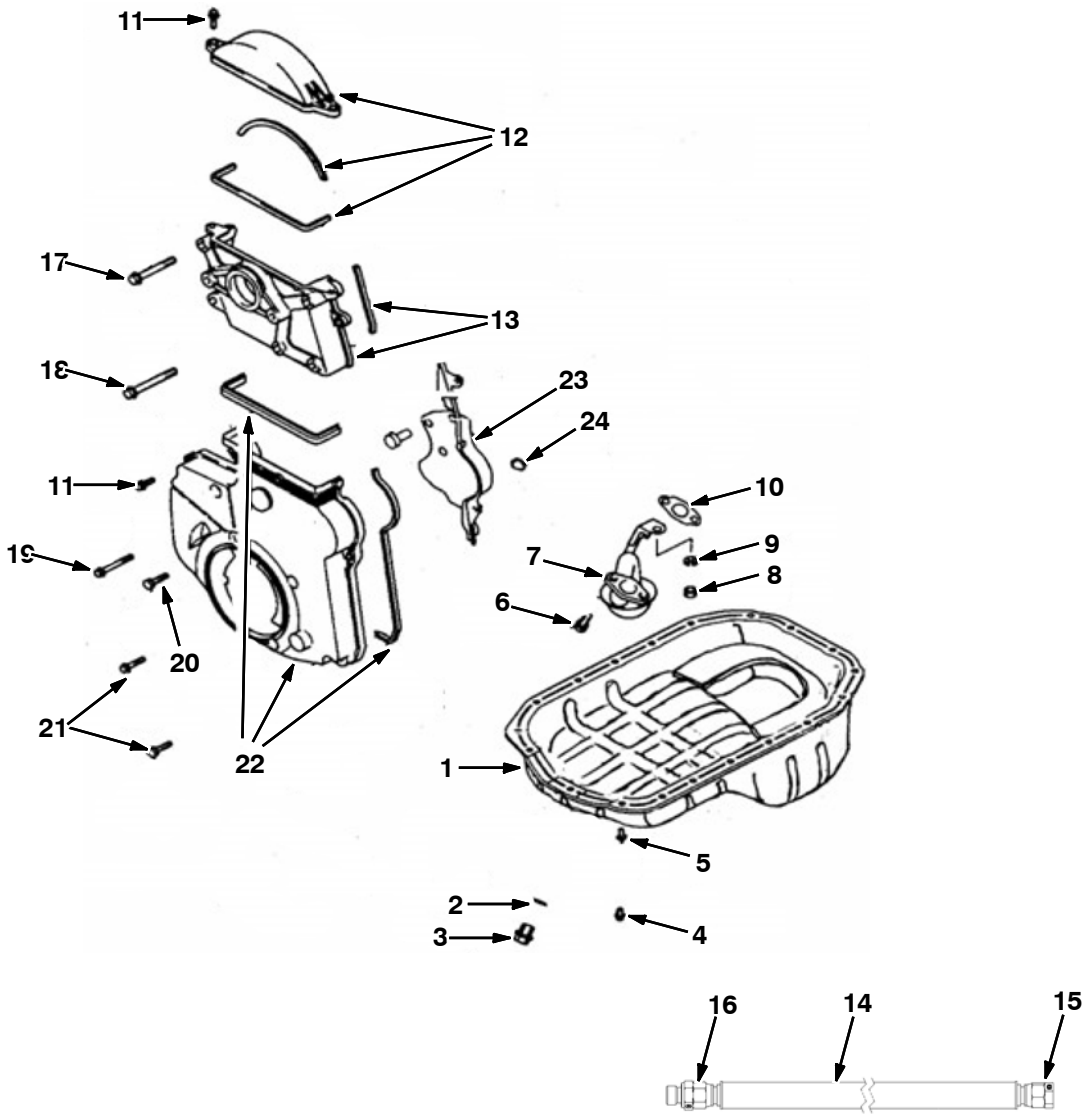

Fig. 4 - Front Cover and Oil Pan Group

	Ref.	Part No.	Description	Qty.
▽	1	9010487	Pan, Oil	1
▲	2	9010488	Gasket, Plug, Drain, Oil	1
▲	3	9010489	Plug, Oil, Drain	1
	4	9010490	Bolt, Flange	17
	5	9010491	Bolt, Flange	2
	6	9010492	Washer, Bolt	2
	7	9010493	Screen, Oil	1
	8	9010494	Nut, Strainer	1
	9	9010495	Washer, Strainer	1
	10	9010496	Gasket, Screen	1
	11	9010497	Bolt, Flange	8
	12	9010498	Cover Assy, Front, Upper [T- Belt]	1
	13	9010502	Bracket Assy, Coil, Ignition	1
	14	9010311	Hose, Drain, Oil [Mit 20/24m]	1
	15	9010312	Plug, Flare, 37deg [Mit]	1
	16	9010313	Fitting, 37deg [Mit]	1
	17	9010503	Bolt, Flange	3
	18	9010504	Bolt, Flange	1
	19	9010505	Bolt, Flange	1
	20	9010506	Bolt	2
	21	9010507	Bolt	2
	22	9010508	Cover, Lower, Front [T- Belt]	1
	23	9010511	Cover, Rear [T- Belt]	1
	24	9010512	Plug, Rubber	1

Fig. 5 - Camshaft and Valve Group

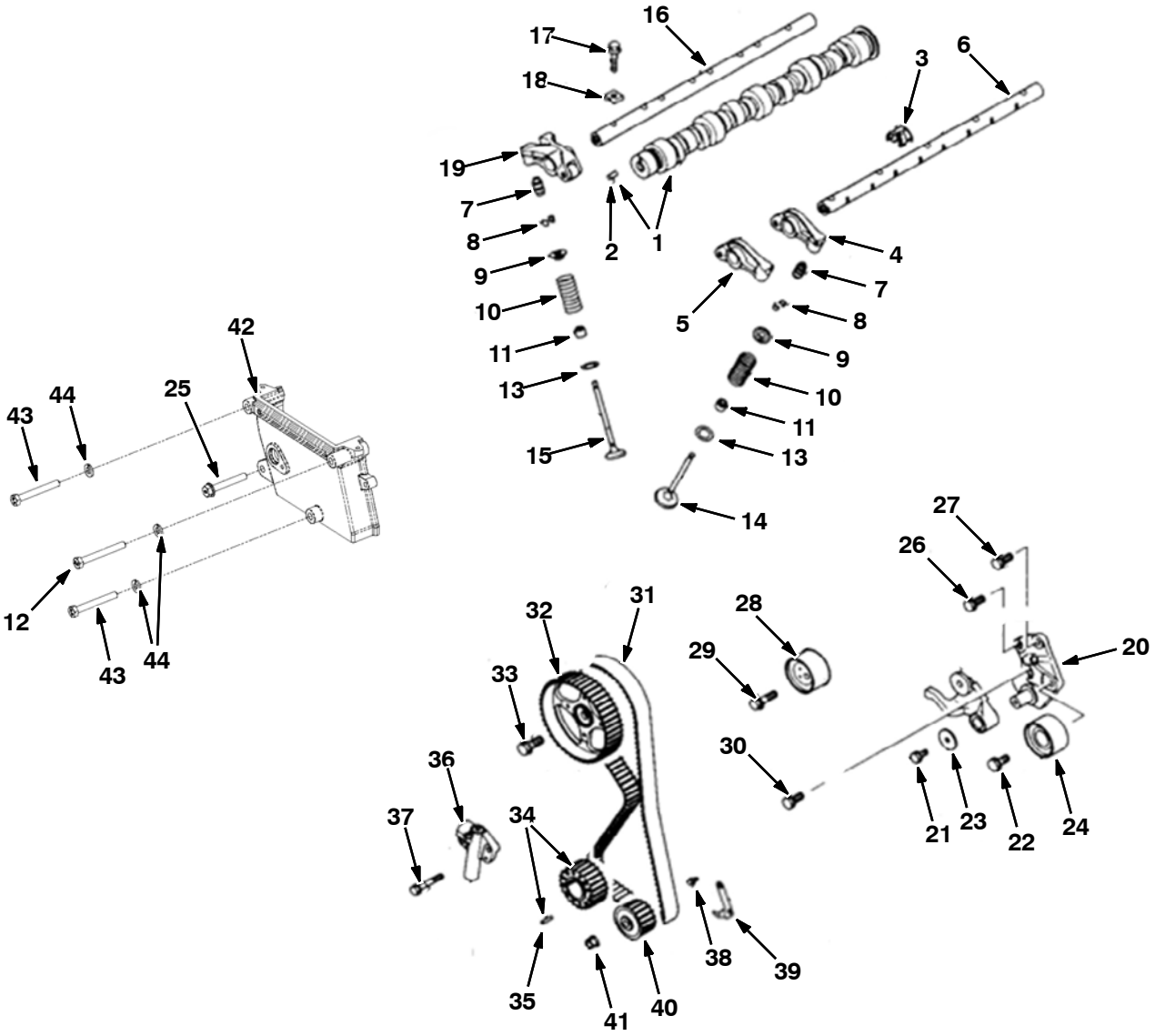

Fig. 5 - Camshaft and Valve Group

	Ref.	Part No.	Description	Qty.
▽	1	9010530	Camshaft Assy	1
▲	2	9010535	Pin, Dowel	1
	3	9010532	Shaft, Spring, Rocker	4
	4	9010533	Arm Assy, Rocker [B]	4
	5	9010534	Arm Assy, Rocker [A]	4
	6	9010531	Shaft, Arm , Rocker	1
	7	9010536	Adjuster Assy, Lash	16
	8	9010537	Valve, Spring, Lock	32
	9	9010538	Valve, Spring, Retainer	16
	10	9010539	Valve, Spring	16
	11	9010540	Valve, Seal, Stem	16
	12	9010253	Bolt, M8- 1.25 X 70 Hxhd [Mit]	1
	13	9010541	Valve, Spring, Seat	16
	14	9010542	Valve, Inlet	8
	15	9010543	Valve, Exhaust	8
	16	9010544	Shaft, Arm, Rocker	1
	17	9010545	Bolt, Flange	13
	18	9010546	Shaft, Cap, Rocker	13
	19	9010547	Arm Assy, Rocker [C]	4
▽	20	9010548	Bracket, Pulley, Tensioner	1
▲	21	9010549	Bolt, Washer	1
▲	22	9010550	Bolt, Washer	1
▲	23	9010551	Washer	1
▲	24	9010552	Pulley, Idler	1
	25	9010254	Bolt, M8- 1.25 X 55 Fi Hd [Mit]	1
	26	9010554	Bolt, Seal	1
	27	9010555	Bolt, Washer	1
	28	9010556	Pulley, Tensioner	1
	29	9010557	Bolt, Washer	1
	30	9010550	Bolt, Washer	1
	31	9010559	Belt, Timing	1
	32	9010560	Sprocket, Camshaft	1
	33	9010561	Bolt, Flange	1
▽	34	9010562	Sprocket Assy, Cshft	1
▲	35	9010563	Pin, Spring	1
	36	9010564	Tensioner	1
	37	9010565	Bolt, Flange	2
	38	9010491	Bolt, Flange	2
	39	9010567	Bracket, Indicator, Timing	1
	40	9010568	Sprocket, Pump, Oil	1
	41	9010569	Nut	1
	42	9010250	Cover, Timing, Gear [Mit 2.0/2.4l]	1
	43	9010251	Bolt, M8- 1.25 X 65 Hxhd [Mit]	2
	44	9010252	Washer, Lock, M8 [Mit]	3

Fig. 6 - Piston and Crankshaft Group

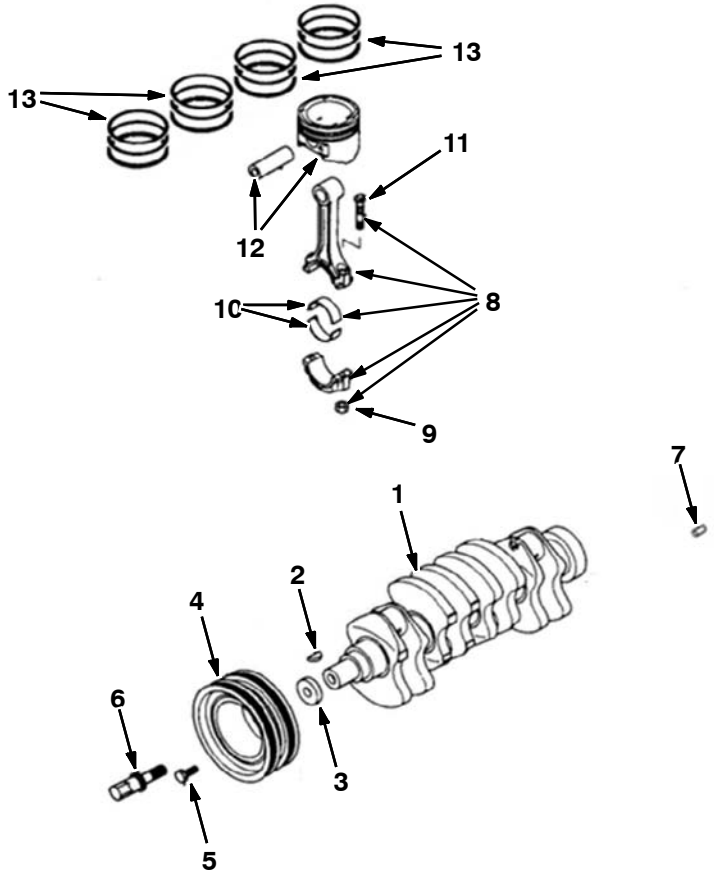

	Ref.	Part No.	Description	Qty.
	1	9010513	Crankshaft Assy	1
	2	9010514	Key	1
	3	9010515	Washer, Special	1
	4	9010516	Pulley Assy, Damper, Torsional	1
	5	9010517	Bolt, Washer	4
	6	9010518	Bolt, Sprocket, Cshft	1
	7	9010519	Pin, Dowel	1
▽	8	9010520	Rod Assy, Connecting	4
▲	9	9010521	Nut	8
▲	10	9010522	Bearing, Rod, Connect [Yellow Std]	4
▲	10	9010523	Bearing, Rod, Connect [No Color Std]	4
▲	10	9010524	Bearing, Rod, Connect [Lan Std]	4
▲	11	9010525	Bolt, Connecting	8
	12	9010526	Piston, Pin [Std A]	4
	12	9010527	Piston, Pin [Std B]	4
	12	9010528	Piston, Pin [Std C]	4
	13	9010529	Piston Set, Ring	1

Fig. 7 - Balancer Group

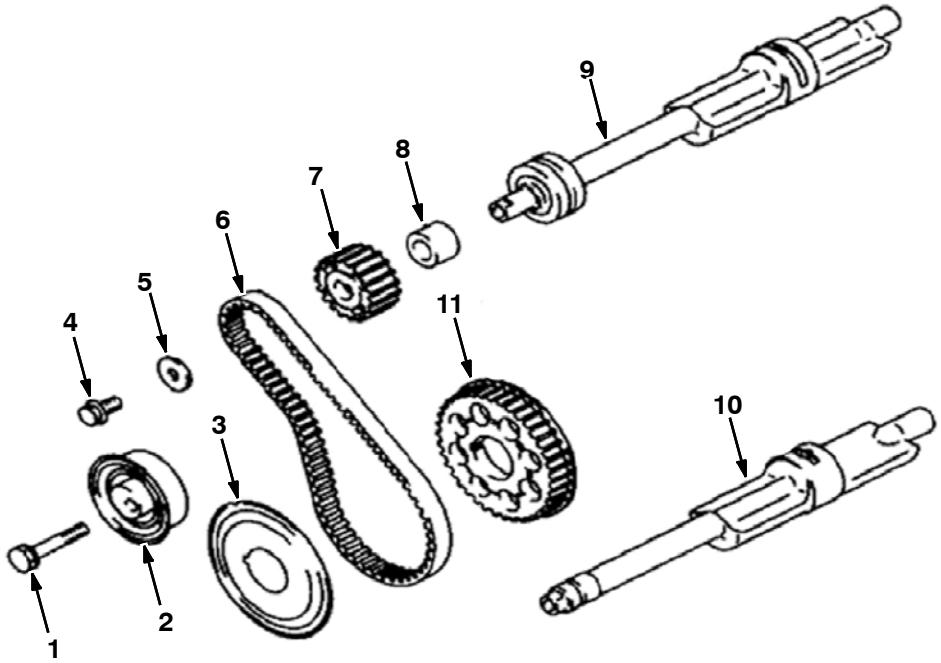

Ref.	Part No.	Description	Qty.
1	9010570	Bolt, Belt, Balancer, Train	1
2	9010571	Tensioner, Timing, Belt	1
3	9010572	Flange, Sprocket, Cshft	1
4	9010600	Bolt, Flange	1
5	9010574	Washer, Belt, Balancer, Train	1
6	9010575	Belt, Timing	1
7	9010576	Sprocket, Shaft, Balancer	1
8	9010577	Spacer, Belt, Balancer, Train	1
9	9010578	Shaft, Right, Balancer	1
10	9010579	Shaft, Left, Balancer	1
11	9010580	Sprocket, Cshft	1

Fig. 8 - Oil Pump and Pressure Switch Group

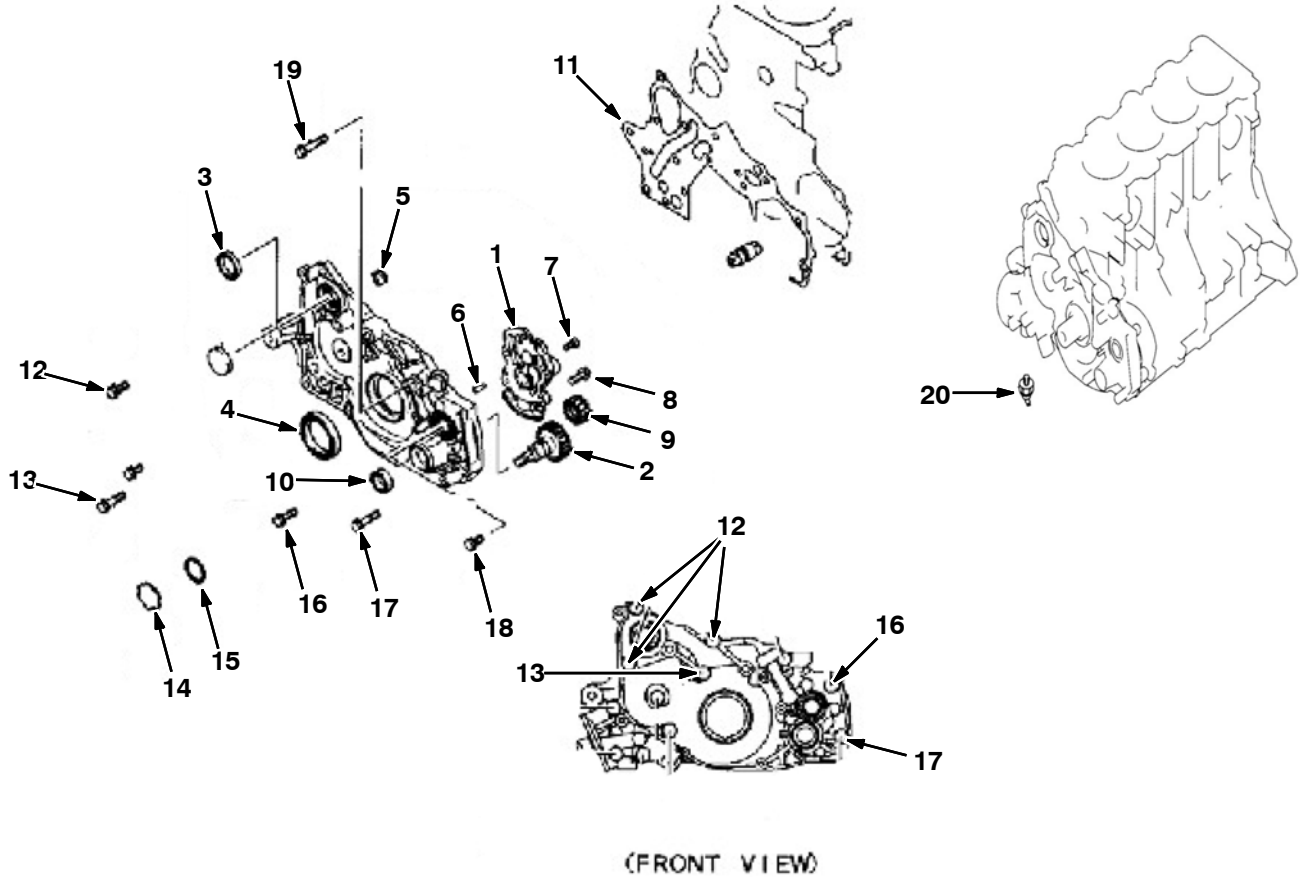

	Ref.	Part No.	Description	Qty.
▽	1	9010582	Pump, Oil	1
▲	2	9010592	Pump, Gear, Drive, Oil	1
▲	3	9010585	Seal, Oil	1
▲	4	9010586	Seal, Oil	1
▲	5	9010587	Plug, Tapper	1
▲	6	9010426	Pin, Dowel	2
▲	7	9010589	Screw	1
▲	8	9010590	Bolt, Flange	4
▲	9	9010591	Pump, Gear, Oil	1
▲	10	9010601	Seal, Oil	1
	11	9010593	Gasket, Case, Front	1
	12	9010594	Bolt, Washer	3
	13	9010595	Bolt, Washer	1
	14	9010596	Plug, Cap	1
	15	9010597	O- Ring	1
	16	9010598	Bolt, Flange	1
	17	9010599	Bolt, Flange	1
	18	9010600	Bolt, Flange	1
	19	9010583	Bolt, Flange	1
	20	9010259	Sender, Oil, Press [Mit] (3 Prong)	1

Fig. 9 - Water Pump Group

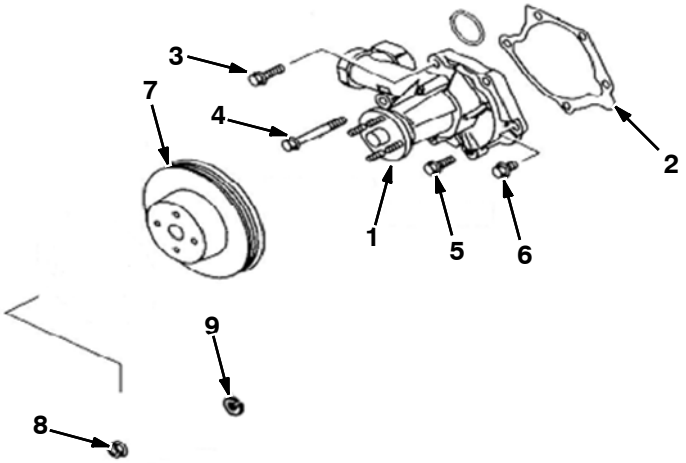

Ref.	Part No.	Description	Qty.
1	9010602	Pump, Water	1
2	9010603	Gasket, Pump, Water	1
3	9010604	Bolt, Flange	1
4	9010503	Bolt, Flange	1
5	9010606	Bolt, Flange	2
6	9010607	Bolt, Flange	1
7	9010612	Pulley, Pump, Water	1
8	9010609	Nut, Flange	4
9	9010610	Washer, Spring	4

Fig. 10 - Intake Manifold Gasket Group

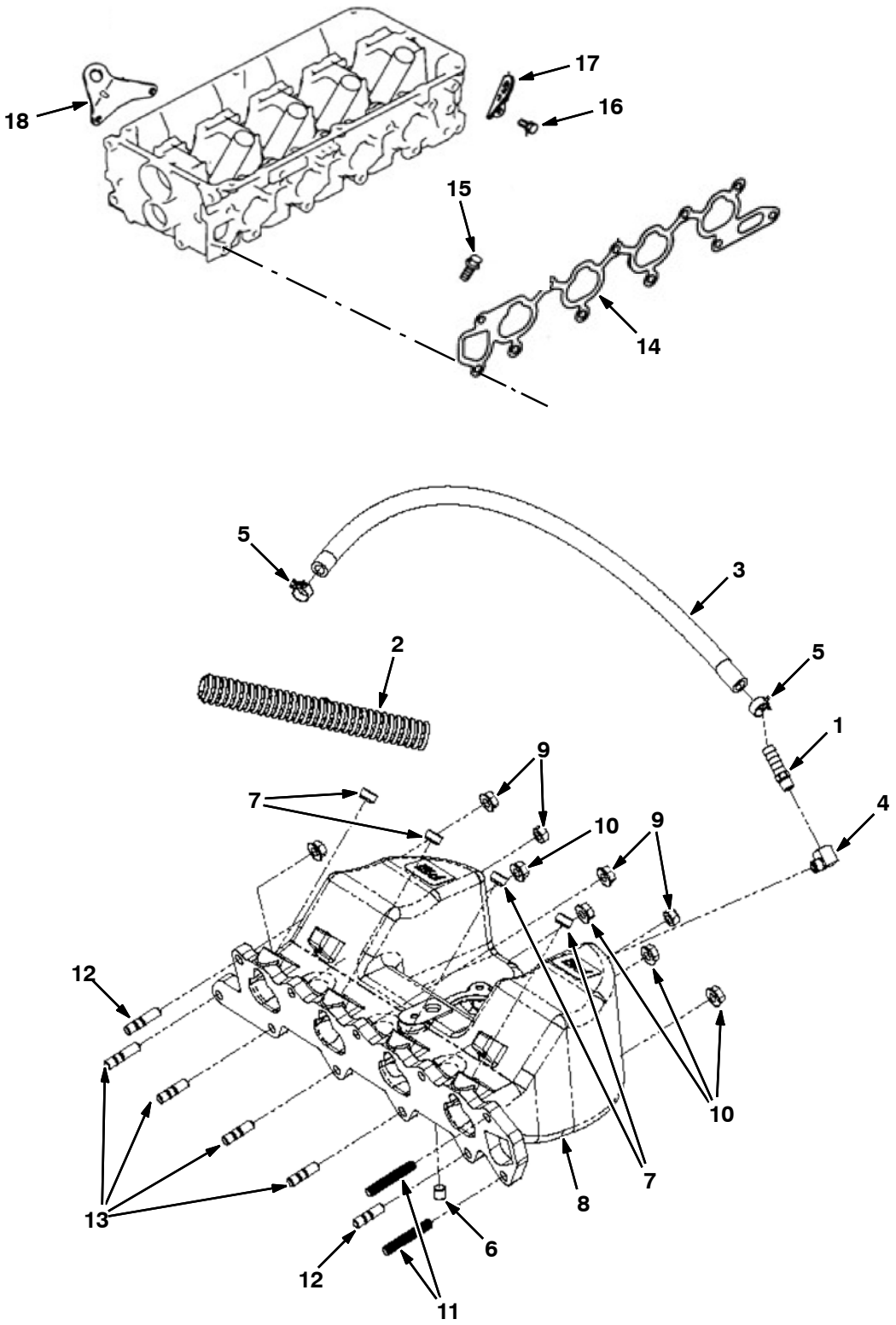

Fig. 10 - Intake Manifold Gasket Group

Ref.	Part No.	Description	Qty.
1	9010382	Fitting, 1/8 Mpt X 3/8 Hb [Mit]	1
2	9010281	Loom, Convoluted, Split 5/8 [Mit]	17”
3	385001	Hose, Fuel, .38d, Rbr[16”L]	20”
4	9010383	Elbow, 1/8m X 1/8f, 90 [Mit]	1
5	9010282	Clamp, 3/8id [Mit Olive Green]	2
6	9010283	Plug, 1/8 Npt, Brs, Skt Hd [Mit]	1
7	9010284	Plug, Injector [Mit]	4
8	9010285	Manifold, Intake [Mit 20/24m Tilt]	1
9	9010286	Nut, M8- 1.25 [Mit]	2
10	385015	Nut, Flng, M8	7
11	9010287	Stud, M8- 1.25 X 50 Full Thrd [Mit]	2
12	9010288	Stud, M8- 1.25 X 35 [Mit Double End]	2
13	9010384	Stud, M8- 1.25 X 30 [Mit Double End]	4
14	9010613	Gasket, Manifold, Intake	1
15	9010606	Bolt, Flange	2
16	9010615	Bolt, Manifold, Inlet	1
17	9010617	Hanger, Engine	1
18	9010618	Hanger, Engine	1

Fig. 11 - Exhaust Manifold Gasket Group

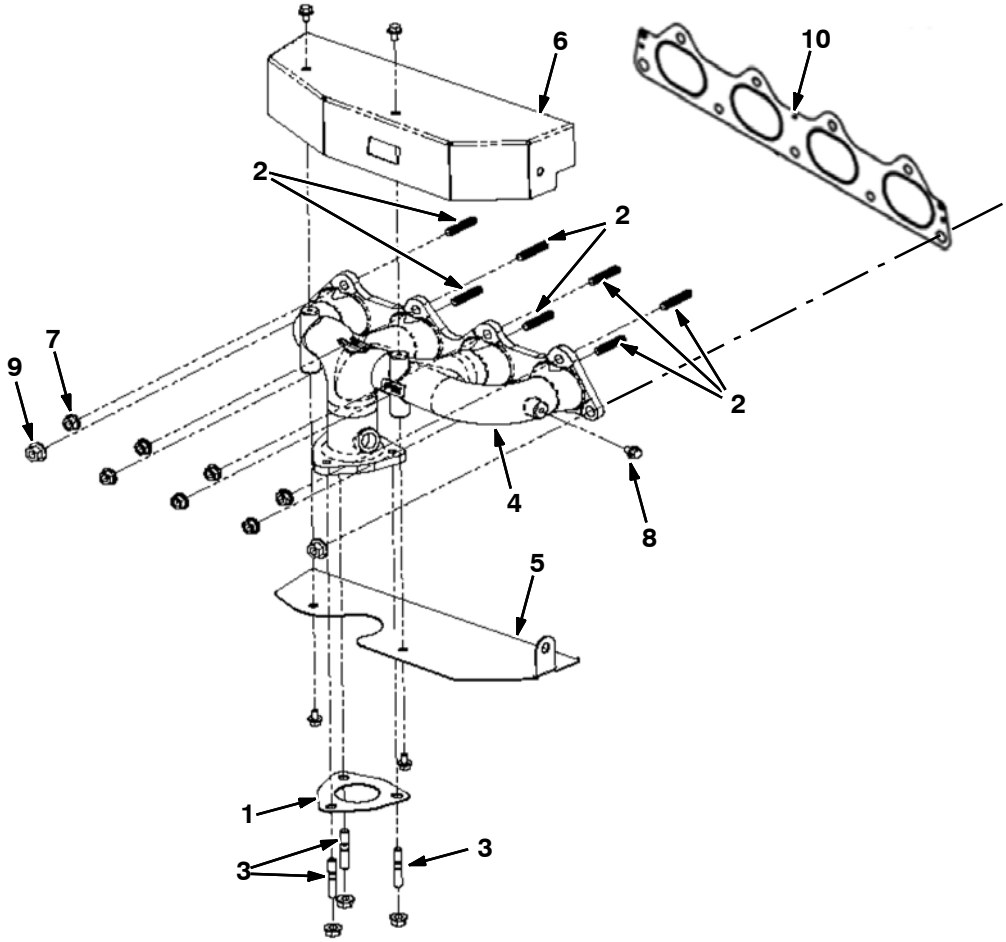

Ref.	Part No.	Description	Qty.
1	9010296	Gasket, Manifold, Exh [Mit]	1
2	9010297	Stud, M8- 1.25 X 40 [Mit]	7
3	372020	Stud, Manifold, Intake, M8 X 28	3
4	9010298	Manifold, Exhaust [Mit 2.0/2.4l]	1
5	9010302	Shield, Heat, Lower [Mit 20/24m]	1
6	9010303	Shield, Heat, Upper [Mit 20/24m]	1
7	385015	Nut, Flng, M8	10
8	9010262	Bolt, M6- 1.0 X 10 Fl Hd [Mit]	5
9	9010239	Nut, M10- 1.25 Flg [Mit]	2
10	9010619	Gasket, Manifold, Exhaust	1

Fig. 12 - Fan Tensioner and Pump Mount Group

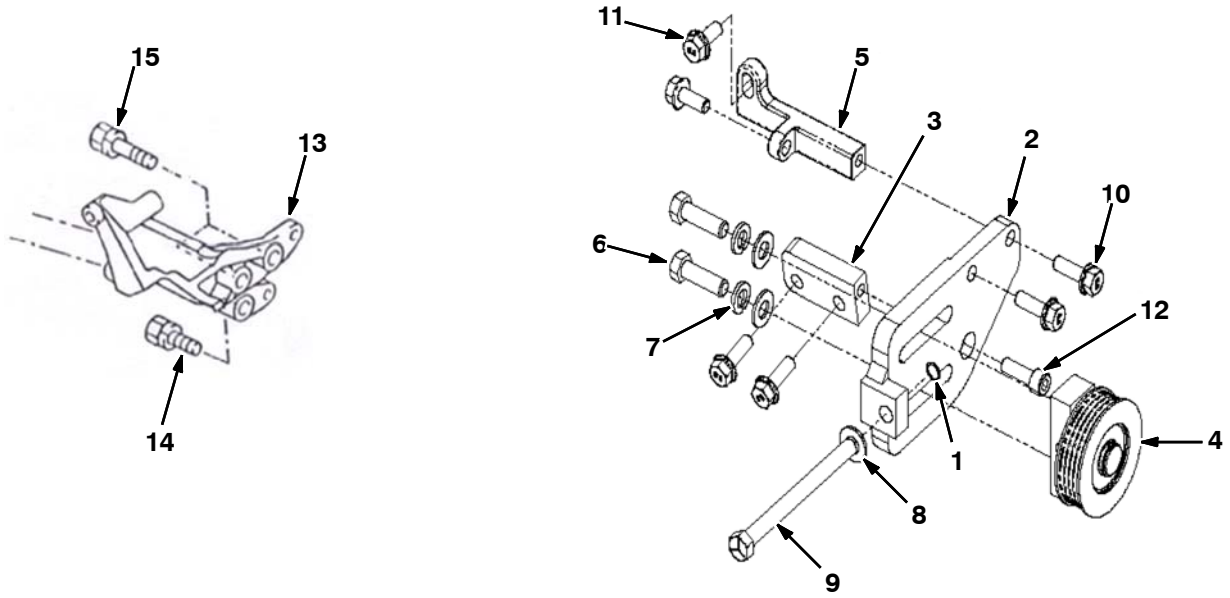

Ref.	Part No.	Description	Qty.
1	371562	Ring, Retaining	1
2	9010222	Plate, Tensioner, Adj [Mit 2.0/2.4l]	1
3	9010223	Bar, Tensioner, Mtg [Mit 2.0/2.4l]	1
4	9010224	Pulley, Tensioner, Assy[Mit2.0/2.4l]	1
5	9010225	Bracket, Tensioner, [Mit 2.0/2.4l]	1
6	9010226	Bolt, 3/8- 16 X 1 1/4 Hxhd [Mit]	2
7	371509	Washer, Lock, 0.38	2
8	9010227	Washer, Flat 3/8, Sae	3
9	9010228	Bolt, 3/8- 16 X 4.5 [Mit]	1
10	9010229	Bolt, M8- 1.25 X 25 [Mit]	4
11	9010230	Bolt, M8- 1.25 X 20 Fl Hd [Mit]	2
12	9010231	Bolt, M8- 1.25 X 25 Soc Hd [Mit]	1
13	9010623	Bracket, Pump, Mtg	1
14	9010624	Bolt, Washer	1
15	9010625	Bolt, Washer	2

Fig. 13 - Flywheel Group

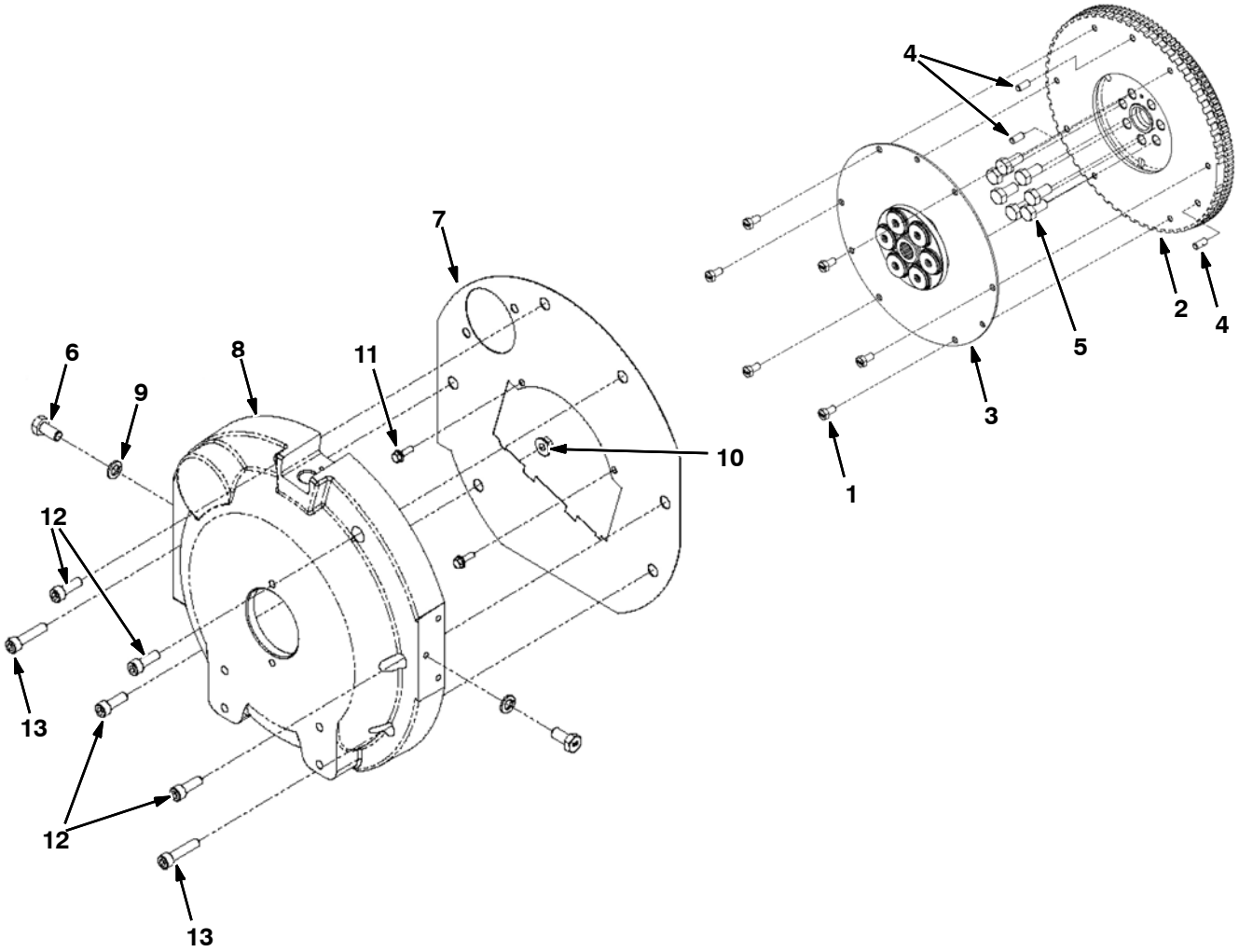

Ref.	Part No.	Description	Qty.
1	9010232	Bolt, M8- 1.25 X 15, Hx Hd [Mit]	6
2	9010233	Flywheel, Flatface [Mit 20/24m]	1
3	9010234	Coupling, Flywheel [Mit20/24m]	1
4	9010235	Pin, Flywheel [Mit 20/20m]	3
5	9010236	Bolt, Flywheel [Mit 20/24m]	7
6	9010359	Bolt, M12- 1.75 X 25, Hex Hd [Mit]	2
7	9010237	Cover, Dust [Mit 2.0l]	1
8	9010238	Housing, Flywheel [Mit 2.0l]	1
9	9010360	Washer, Lock, M12 [Mit]	2
10	9010239	Nut, M10- 1.25 Flg [Mit]	1
11	9010240	Bolt, M6- 1.0 X 20 Fl Hd [Mit]	2
12	9010241	Bolt, M10- 1.25 X 30 Soc Hd [Mit]	4
13	9010242	Bolt, M10- 1.25 X 45 Soc Hd [Mit]	2

Fig. 14 - Ignition Coil and Spark Plug Group

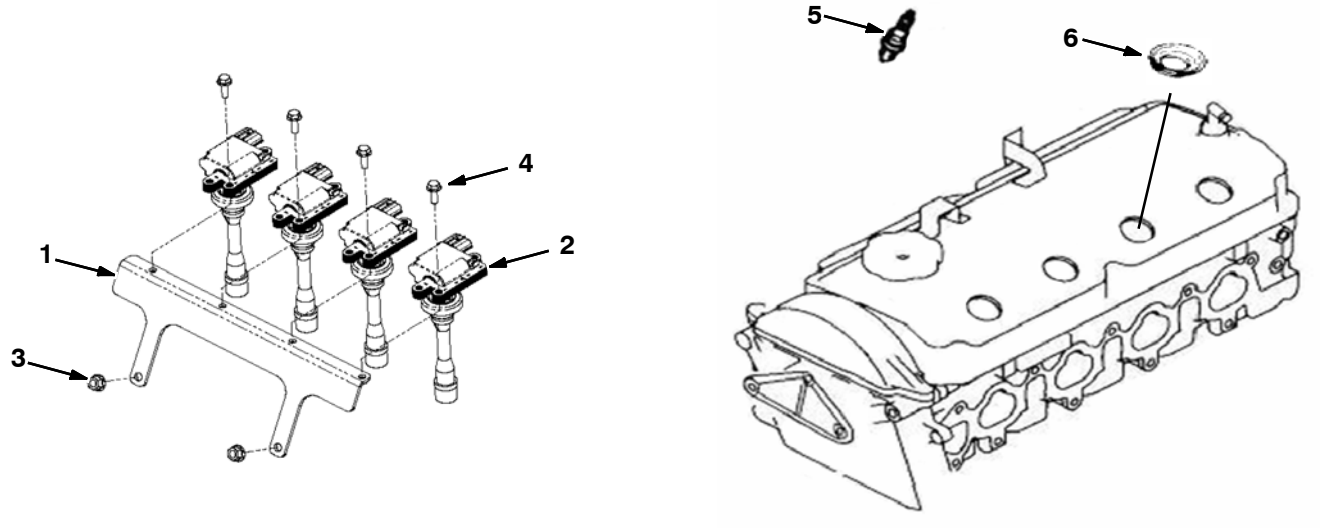

Ref.	Part No.		Description	Qty.
1	9010243		Bracket, Coil [Mit 2.0/2.4l]	1
2	9010244		Coil, Ignition [Mit 2.0/2.4l]	4
3	385015		Nut, Flng, M8	2
4	9010240		Bolt, M6- 1.0 X 20 Fl Hd [Mit]	4
5	9010622	1	Plug, Spark [Torch K6rf- 11 14mm]	4
5	9014160	2	Plug, Spark [Mitsubishi 2015 12mm]	4
6	9010479		Seal, Oil	4

1 Serial Number (004000- 004582)

2 Serial Number (004583-)

Fig. 15 - Starter / Alternator Group

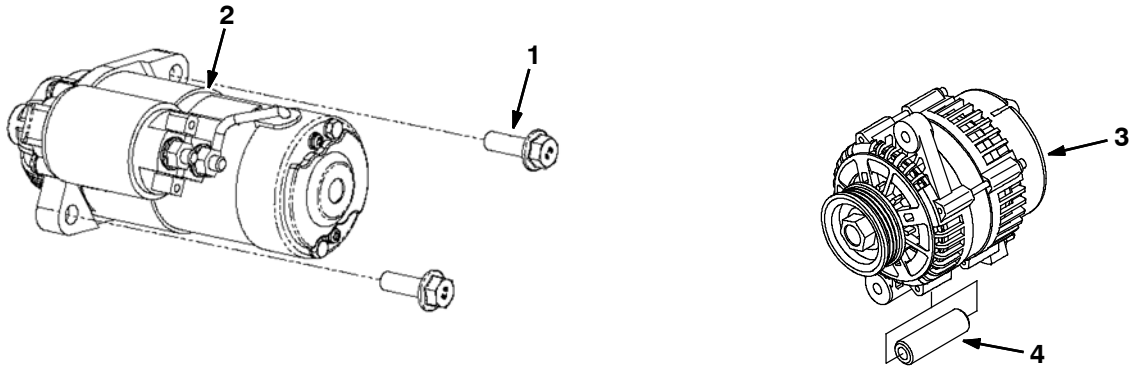

Ref.	Part No.	Description	Qty.
1	9010245	Bolt, M10- 1.50 X 30 [Mit]	2
2	9010246	Starter, Motor [Mit 2.0/2.4l]	1
3	9010217	Alternator, 7si [Mit Df Sur- Belt]	1
4	9010219	Spacer, Alternator [Mit 2.0/2.4l]	1

Fig. 16 - Remote Oil Filter Group

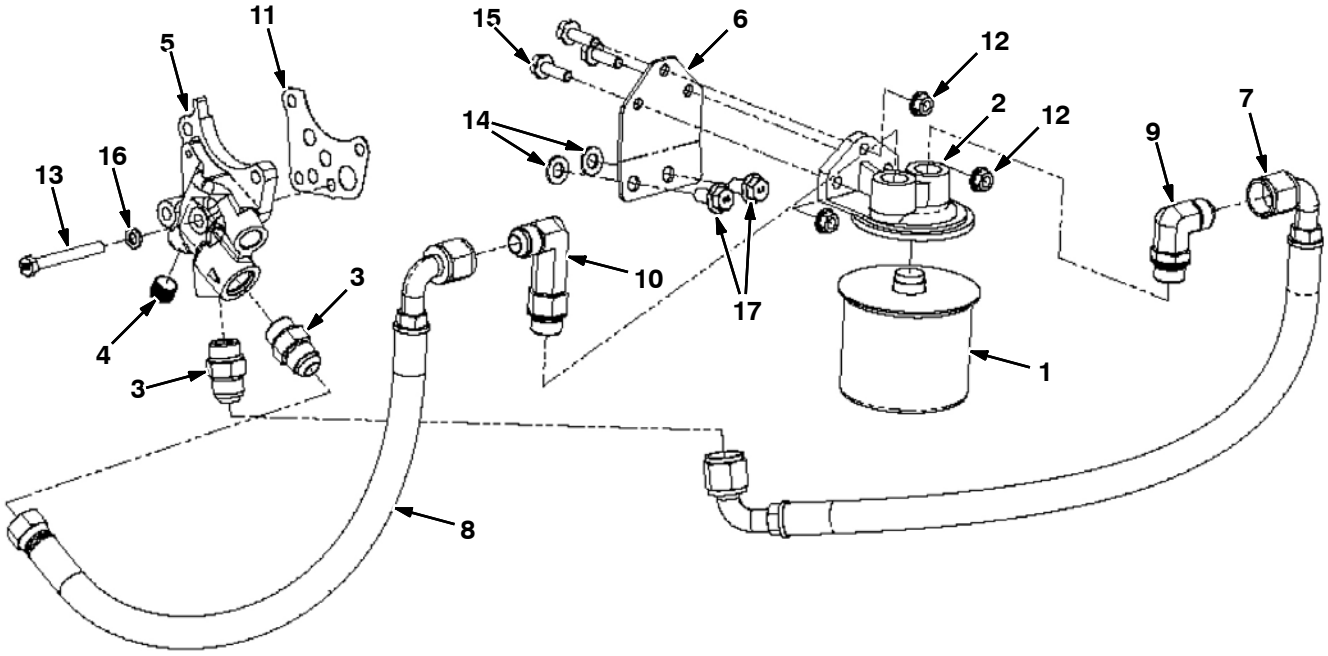

Ref.	Part No.	Description	Qty.
1	393982	Element, Fltr, Oil, Spin- On (Mits)	1
2	371503	Mount, Fltr, Remote	1
3	9010371	Fitting, Str, 10- 10 Orb, 37fi [Mit]	4
4	9010372	Plug, 3/8npt X 5/16, Brs [Mit]	1
5	9010373	Adapter, Filter, Oil, Remote [Mit]	1
6	9010374	Bracket, Filter, Oil, Remote [Mit]	1
7	9010375	Hose, 90x90,Filter, Oil, Remote[Mit]	1
8	9010376	Hose, 90xstr,Flter, Oil, Remote[Mit]	1
9	9010628	Elbow	1
10	9010629	Elbow	1
11	9010377	Gasket, Oil, Adapter [Mit 2.0/2.4]	1
12	385015	Nut, Flng, M8	3
13	9010253	Bolt, M8- 1.25 X 70 Hxhd [Mit]	1
14	9010630	Washer	2
15	9010229	Bolt, M8- 1.25 X 25 [Mit]	3
16	9010380	Washer, Lock, M8 [Mit]	1
17	9010631	Bolt	2

Fig. 17 - Coolant Group

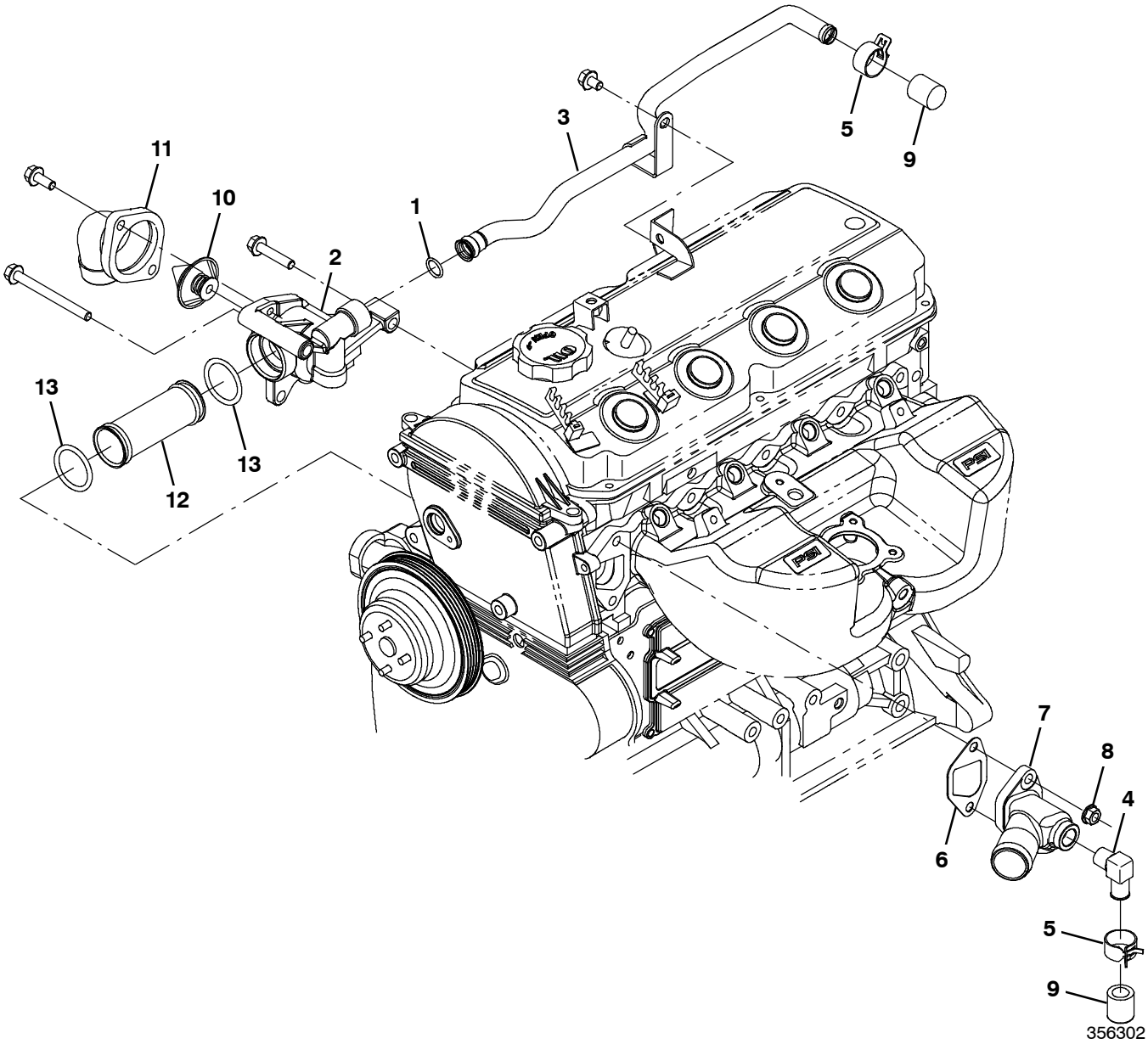

Ref.	Part No.	Description	Qty.
1	9010289	O- Ring [Mit 208 Buna- N]	1
2	9010290	Housing, T- Stat, 2 Holes [Mit]	1
3	9010291	Tube, Water, Line [Mit]	1
4	385011	Fitting, E90	1
5	384979	Clamp, Hose, Spring, 0.62d	2
6	9010632	Gasket, Outlet	1
7	9010294	Outlet, Water, W/Plug [Mit 2.0/2.4l]	1
8	385015	Nut, Flng, M8	2
9	9010295	Cap, Rubber, 5/8id [Mit 2.0/2.4l]	2
10	9010905	Thermostat Kit, Coolant, Replmt [Mitsub]	1
11	9010215	Housing, Thermostat	1
12	9010910	Tube, Pump, Water	1
13	9013530	Seal, Tube, Water [Mit 2.0l]	2

Fig. 18 - DSR Coolant Group, LPG Engine

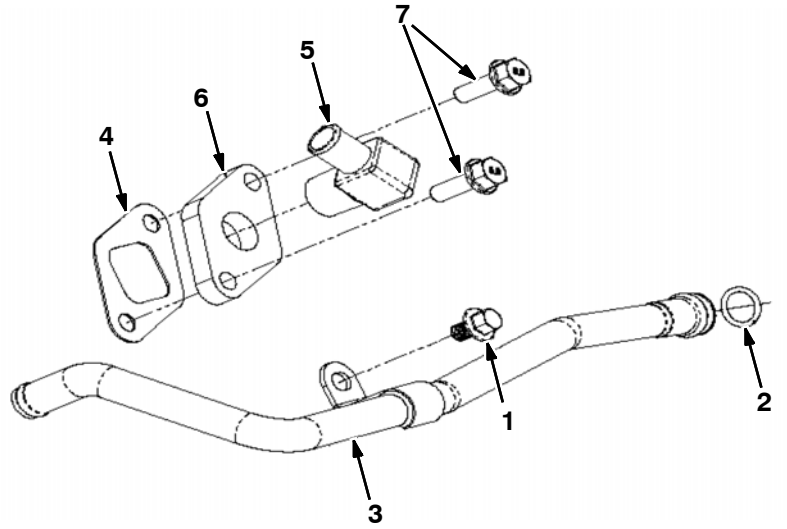

Ref.	Part No.	Description	Qty.
1	9010305	Bolt, M8- 1.25 X 12 [Mit]	1
2	9010289	O- Ring [Mit 208 Buna- N]	1
3	9010306	Tube, Cooling, Line [Mit]	1
4	9010307	Gasket, Water Supply [Mit 2.0/2.4l]	1
5	9010308	Fitting, 1/2 Mpt X 5/8bh 90deg [Mit]	1
6	9010309	Plate, Water, Outlet [Mit Bypass]	1
7	9010310	Bolt, M8- 1.25 X 25 Flg Hd [Mit]	2

Fig. 19 - Electrical Group

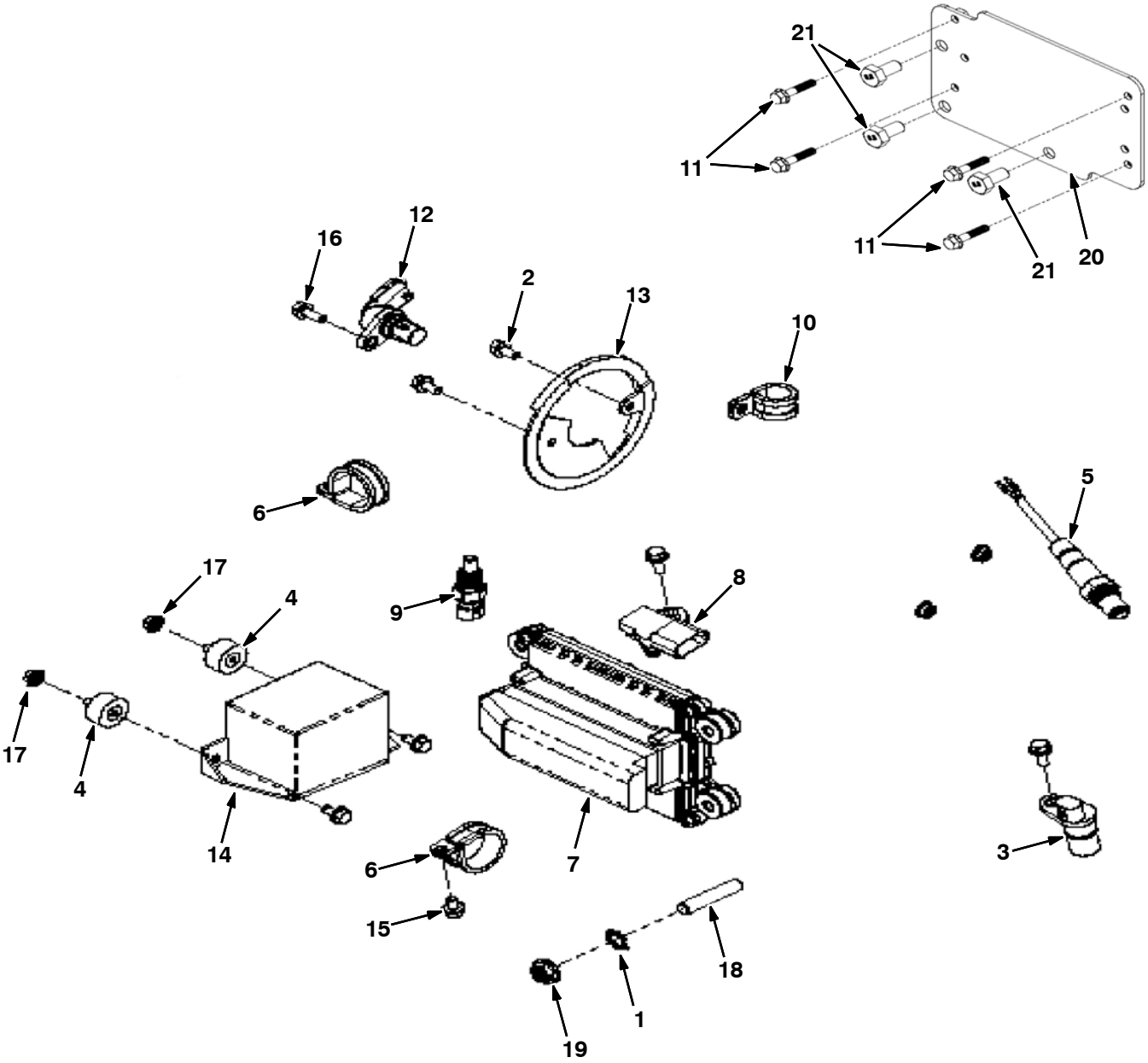

Fig. 19 - Electrical Group

Ref.	Part No.	Description	Qty.
1	9010255	Washer, Star, M10 [Mit]	1
2	9010256	Bolt, M6- 1.0 X 12 Fl Hd Pl [Mit]	2
3	372492	Sensor, Spd, Timing Wheel [3.0l]	1
4	9008805	Isolator	2
5	1028558	Sensor, Exhaust, Tailpipe	1
6	9010257	Clamp, 1/4 Hole [Mit #20]	2
7	1071397	Module, Ecu, Gas [Mit 2.0l 2013]	1
7	1071398	Module, Ecu, Lpg [Mit 2.0l 2013]	1
8	372493	Sensor [Tmap]	1
9	372891	Sensor, Temp, Coolant	1
10	9010258	Clamp, 0.75d [Mit]	1
11	9010249	Bolt, M6- 1.0 X 30 Fl Hd [Mit]	4
12	9010260	Sensor, Camshaft [Mit]	1
13	9010261	Cam, Sensor, Wheel [Mit 2.0/2.4l]	1
14	1071653	Harness, Wire, Eng, Gas [Mit, 2.0l]	1
14	1071654	Harness, Wire, Eng, Lpg [Mit, 2.Ol]	1
15	9010262	Bolt, M6- 1.0 X 10 Fl Hd [Mit]	3
16	9010263	Bolt, M6- 1.0 X 16 Fl Hd [Mit]	3
17	9010264	Nut, M6- 1.0 Flange [Mit]	4
18	9010366	Stud, M10- 1.25 X 50, Full Thrd [Mit]	1
19	9010367	Nut, M10- 1.25, Hx Flg [Mit]	1
20	9010247	Plate, Mtg, Ecu [Mit 2.0/2.4l]	1
21	9010248	Bolt, M10- 1.25 X 20 Hxhd [Mit]	3

Fig. 20 - Fuel Rail Group, Gasoline Engine

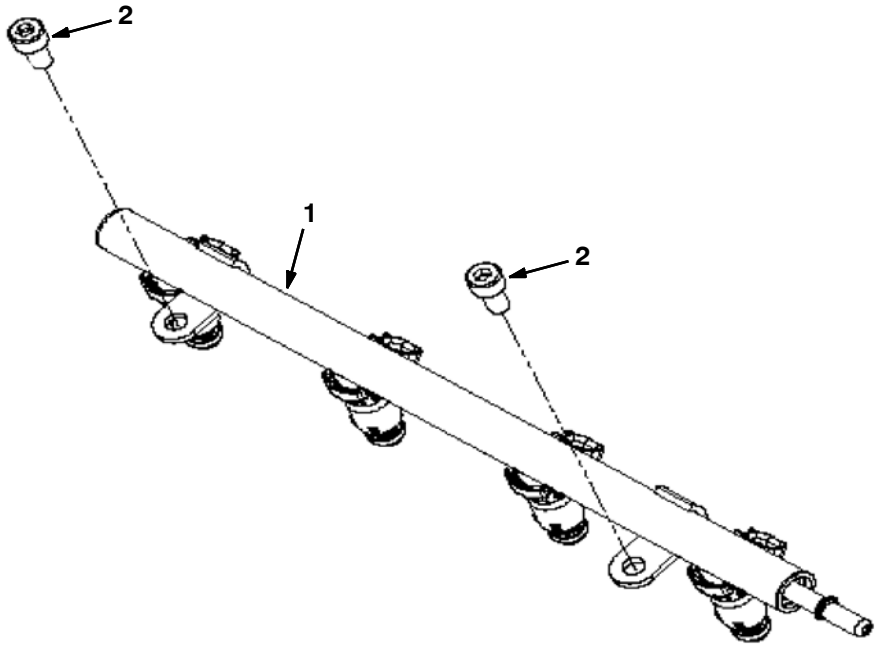

Ref.	Part No.	Description	Qty.
1	9010306	Tube, Cooling, Line [Mit]	1
2	9010327	Bolt, M8- 1.25 X 16, Soc Hd [Mit]	2

Fig. 21 - Throttle Body Group, Gasoline Engine

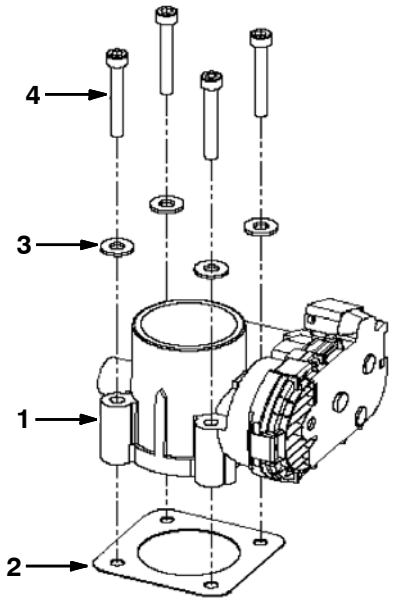

Ref.	Part No.	Description	Qty.
1	9010266	Actuator [Mit , Bosch]	1
2	9010268	Gasket, Throttle [Mit 40mm]	1
3	9010330	Washer, 1/4 Flat [Mit]	4
4	9010331	Bolt, M6- 1.0 X 45, Skt Hd [Mit]	4

Fig. 22 - Throttle Body Group, LPG Engine

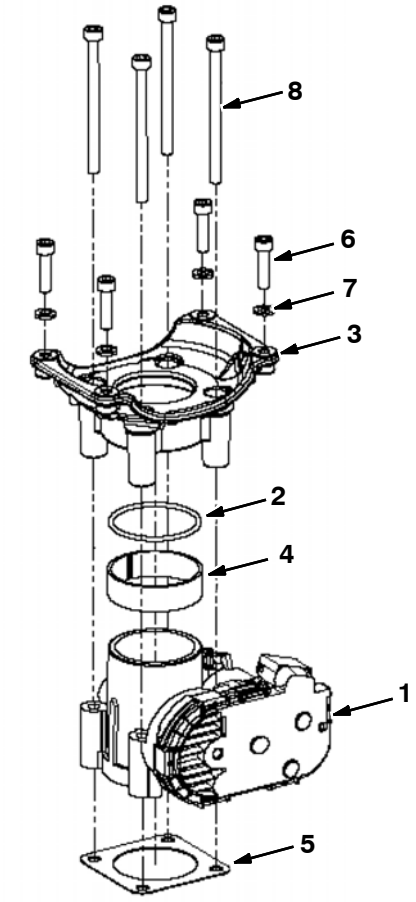

Ref.	Part No.	Description	Qty.
1	9010266	Actuator [Mit , Bosch]	1
2	1037311	Seal, Org, Lpg, Mixer	1
3	9006619	Adapter	1
4	9010267	Spacer, Ring, Throttle [Mit 40mm]	1
5	9010268	Gasket, Throttle [Mit 40mm]	1
6	9010269	Bolt, M6- 1.0 X 25 Soc Hd [Mit]	4
7	9010270	Washer, Lock, M6 [Mit]	4
8	9010271	Bolt, M6- 1.0 X 85 Soc Hd [Mit]	4

Fig. 23 - Vaporizer Group, LPG Engine

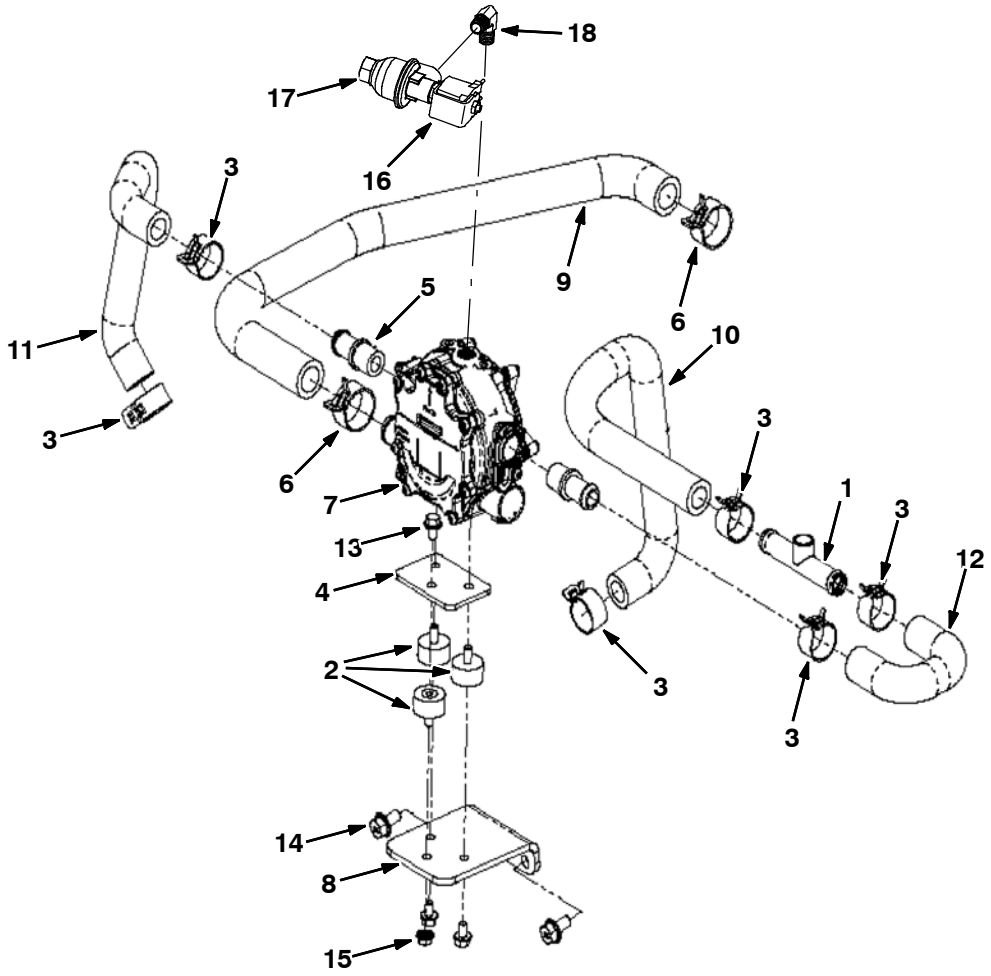

	Ref.	Part No.	Description	Qty.
	1	9010272	Hose Assy, Upper, Tap [Mit]	1
	2	9008805	Isolator	3
	3	384979	Clamp, Hose, Spring, 0.62d	6
	4	9008804	Plate, Mtg [Epr]	1
	5	9010273	Fitting, 1/2 X 5/8 Hose,Plastic[Mit]	2
	6	9010274	Clamp, Tension [Mit #29]	2
▽	7	9008193	Regulator	1
▲		9010626	Repair Kit, Vaporizer	1
	8	9010275	Bracket, Vaporizer [Mit 20/24m Tilt]	1
	9	9010276	Hose, Fuel, Molded [Mit 20/24m]	1
	10	9010277	Hose, Coolant, Molded [Mit 20/24m]	1
	11	9010278	Hose, Coolant, Molded [Mit 20/24m]	1
	12	9010279	Hose, Coolant, Molded [Mit 20/24m]	1
	13	9010262	Bolt, M6- 1.0 X 10 Fl Hd [Mit]	3
	14	9010280	Bolt, M8- 1.25 X 16 Fl Hd [Mit]	2
	15	9010264	Nut, M6- 1.0 Flange [Mit]	1
▽	16	9006620	Lock- Off, 12v, Lpg [Mit]	1
▲	17	9007380	Filter Kit, Fuelock, Lpg	1
	18	9010317	Fitting, 1/4mpt X 1/4mpt, 90deg[Mit]	1

Fig. 24 - Electronic Pressure Regulator (EPR) Group, LPG Engine

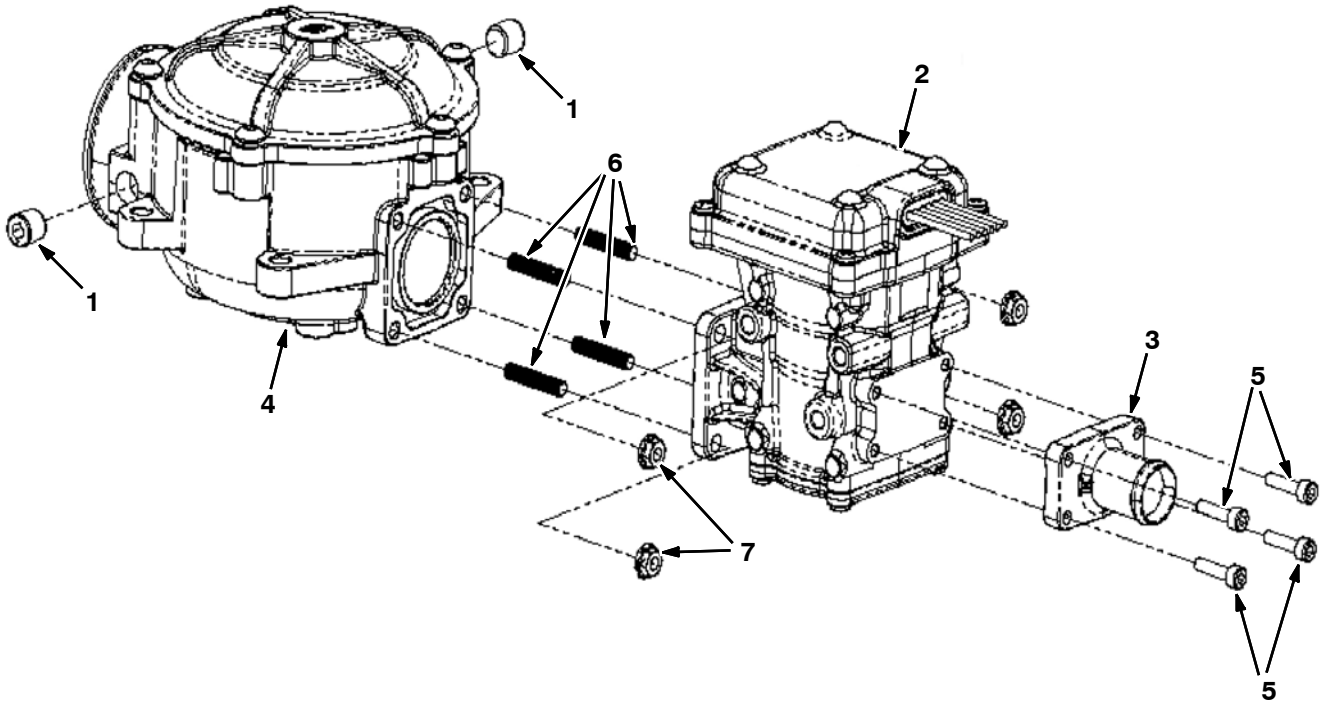

	Ref.	Part No.	Description	Qty.
	1	9010314	Plug, 1/8npt, Brs [Mit]	2
	2	9008806	Regulator, Press, Electronic [Epr]	1
	3	9008807	Fitting, Barb, 3/4” [Epr]	1
▽	4	9006618	Mixer , Lpg	1
▲		9010634	Repair Kit, Mixer	1
	5	9008808	Screw, Soc, M4 X 0.70 X 16	4
	6	9007424	Stud, M05- 0.8	4
	7	9007423	Nut, Flng, M05- 0.8	4

SECTION 7

CONTENTS **PAGE**

PART NUMBER TO PAGE NUMBER CROSS REFERENCE LIST 7-2
PART DESCRIPTION TO PAGE NUMBER CROSS REFERENCE LIST 7-16

PART NUMBER TO PAGE NUMBER CROSS REFERENCE LIST

Part Number	Page Number
C460919	2-208
IB3614	4-22
00500-15	4-10, 4-11
00927	2-95, 2-97
00954	2-129
00960	2-39, 2-61
00966	4-22
01316	3-3, 3-51
01493	2-9
01681	2-17
01683	2-83, 3-3, 3-19, 3-47, 3-51, 3-53, 3-63
01684	2-5, 2-43, 2-45, 2-89, 2-93, 2-101, 2-123, 2-125, 3-19, 3-27, 3-47, 3-61
01685	2-41, 2-47, 2-63, 2-89, 2-93, 2-101, 2-103, 2-105, 2-107, 2-111, 2-115, 2-121, 2-127, 2-131, 3-7, 3-11, 3-55
01686	2-7, 2-103, 3-13, 3-55
01714	2-81
01754	2-89
01760	2-15
01762	2-95, 2-97, 3-7, 3-9
02430	4-23
02706	4-7
02850	2-15, 2-43, 2-85, 3-65
02931	2-107
02938	2-91, 4-27
02942	2-85
03026	2-35, 2-37, 2-57, 2-59
03192	3-45
03495	2-105
03922	2-129
04375	2-61
04414	2-9, 2-23, 2-49, 2-51, 2-103, 2-105
04706	2-17
04733-12	2-99
06532	2-25, 2-27, 2-29
06548	2-79
06549	2-15, 2-73, 3-27, 3-47, 3-51
06922	2-89
06927	2-43
06928	2-15, 2-91
06933	2-15
06939	3-51
06942	2-9, 2-19, 2-25, 2-27, 2-29, 2-31, 2-43, 2-45, 2-71, 2-79, 2-85
06943	2-23, 2-63
06944	2-15
06946	2-25, 2-27, 2-29
06948	3-57, 3-59
06949	2-69
06955	2-79, 2-121, 2-127
06957	2-103
06960	2-17
06961	2-39, 2-41, 2-43
06962	2-45, 2-65
06963	2-89
06965	2-85, 3-63
06968	2-49, 2-51
06969	2-77, 2-99
06972	2-23, 2-49, 2-51, 2-99
06988	2-19
07255	2-25, 2-27
07259	2-85, 2-93, 2-99, 2-107
07299	2-49, 2-51
07449	2-107
07515	3-55
07782	2-19
07786	2-111, 2-115
07788	2-111, 2-115, 2-131
07789	2-85
07790	2-61, 2-65
07791	2-9, 2-31, 2-33, 2-109, 2-113, 2-151
07797	2-145
07805	3-27
08085	2-15
08165	2-45, 2-63
08166	2-41, 2-63
08170	2-79
08171	2-91
08175	2-95, 2-97
08179	2-79, 2-93, 2-99, 2-103, 3-7, 3-11
08180	2-75
08182	2-81, 2-111, 2-115
08202	2-77
08236	2-99
08708	2-9, 2-15, 2-17, 2-19, 2-35, 2-37, 2-43, 2-45, 2-57, 2-59, 2-65, 2-69, 2-79, 3-47, 3-57, 3-59, 3-65
08709	2-39, 2-43, 2-45, 2-47, 2-57, 2-59, 2-61, 2-65, 2-67, 2-69, 2-71, 2-73, 2-79, 2-83, 2-111, 2-115, 2-151, 3-15, 3-65
08711	2-23, 2-49, 2-51, 2-77
08712	2-13, 2-93, 2-103, 2-123, 2-125, 3-47
08713	2-41, 2-47, 2-63, 2-83, 2-87, 2-93, 2-95, 2-97, 2-99, 2-101, 2-103, 2-105, 2-107, 2-109, 2-113, 2-121, 2-125, 2-127, 2-131, 3-7, 3-15
08714	2-85, 2-87, 2-93, 2-103, 2-107
08716	2-41, 2-63, 2-93, 2-111, 2-115, 2-123, 2-125
09005	2-95, 2-97
09007	2-111, 2-115
09010	2-47, 2-83, 2-87, 2-93, 2-95, 2-97, 2-101, 2-125, 2-131, 3-7, 3-11, 3-15, 3-55
09011	2-101, 2-103, 2-131
09023	2-103, 2-131
09028	2-111, 2-115
09037	2-29
09081	2-109, 2-113
09164	2-7
09198	2-83
09200	2-15, 2-89, 2-123, 3-19, 3-61
09206	2-85, 3-27
09252	2-83, 2-85, 3-27
09291	2-89, 2-93
09738	3-13, 3-63
09739	2-123, 3-13, 3-37, 3-39, 3-41, 3-42, 3-43, 3-61
09740	2-9, 2-71, 2-89, 2-95, 2-97, 2-99, 2-101, 2-111, 2-115, 2-117, 2-121, 2-127, 2-131, 2-155, 3-5, 3-27, 3-29, 3-37, 3-39, 3-41, 3-51
09741	2-99, 2-103
09744	2-89, 3-27, 3-61
09832	2-43, 2-45, 2-65
1002898	3-19
1002899	3-19
1005219	3-29
1005302	3-19, 3-29
1005435	3-19, 4-27
1006400	3-3, 3-5, 3-19
1006410	3-3
1006415	3-19, 3-29
1006416	3-19
1007482	2-47, 2-67
1008640	2-39
1008916	2-19
1010614	3-33
1010668	3-19, 3-23, 3-33
1011107	2-69
1011216	2-41, 2-63
1011403	3-29
1011412	3-19, 3-21, 3-23, 3-29, 3-33, 3-51
1011780	2-35, 2-37
1011837	3-31
1011885	3-5

Part Number	Page Number
1011895	2-69
1011899	2-35, 2-37
1012248	2-69
1013031	2-41, 2-63
1013086	2-69
1013117	2-41, 2-63
10137	2-73
1014563	2-39, 2-43, 2-45, 2-65, 2-85, 2-89, 2-93, 2-107, 2-129, 2-133, 3-45
1014705	2-99
1014747	2-47
1014843	2-67
1014929	3-19
1014930	3-5
1014971	4-27
1014974	3-33, 4-27
1015026	3-33
1015032	2-123, 3-13, 3-21, 3-31
1015033	2-123, 3-5
1015041	2-47
1015045	2-123, 3-3, 3-13, 3-21, 3-31
1015048	3-5
1015067	3-23
1015205	2-65
1015486	3-21, 3-31, 3-33, 3-51
1015547	2-25, 2-27, 2-33
1015815	2-55
1015897	2-27
1015930	2-25, 2-31
1016354	4-27
1016560	2-27, 2-33
1016837	3-3
1017022	3-19
1017101	2-118
1017141	2-208
1017218	2-9, 2-15, 2-19, 2-21, 2-61, 2-87, 2-93, 2-118, 2-121, 2-127, 2-131, 2-155, 3-5, 3-27, 3-29, 3-37, 3-39, 3-41, 3-51
1017248	3-39, 3-42
1017250	3-41, 3-43
1017368	2-5
1017386	3-29
1017413	3-29
1017415	3-29
1017903	2-75
1018098	3-19
1018155	4-27
1018207	2-89
1018208	2-91
1018209	2-133
1018216	2-133
1018226	2-85
1018227	2-85
1018239	2-87
1018240	2-85
1018253	2-93
1018266	2-85
1018272	2-87
1018289	2-153
1018293	2-91
1018495	3-51
1018499	3-51
1019031	2-111
1019225	2-7
1019228	2-15
1019250	3-51
1019251	2-7
1019265	2-47
1019285	3-55
1019295	1-1, 2-109, 2-113
1019424	2-121, 2-127
1019445	3-37, 3-39, 3-41
1019636	3-5
1019647	3-42, 3-43
1019939	2-69
1019950	2-203
1019968	2-65
1019971	3-37, 3-39, 3-41
1020168	2-9, 3-27
1020186	2-21
1020209	2-117
1020234	3-65
1020320	2-129
1020341	2-15, 2-21, 2-118, 2-125, 2-129, 3-19
1020434	2-208
1020526	3-61
1020548	2-111
1020904	2-9
1020949	2-35, 2-37, 2-57, 2-59
1021019	2-95, 2-97
1021047	2-91
1021090	2-125
1021210	3-5, 4-3
1021265	2-17
1021290	2-73
1021404	2-107
1021439	3-11
1021473	3-11
1021497	2-107
1021511	2-105
1021546	2-107
1021564	3-11
1021579	1-1, 2-153
1021609	2-103
1021617	3-11
1021794	3-7
1021834	2-9
1021881	3-51
1021920	2-125
1022003	2-101
1022105	2-15
1022106	3-13
1022111	3-7
1022135	3-7
1022137	2-121, 2-127
1022140	2-83
1022188	3-7
1022229	3-5
1022243	2-79
1022260	3-7
1022276	3-45
1022302	3-7
1022318	3-13
1022345	2-81
1022364	2-25
1022370	2-125
1022372	2-103
1022377	2-129
1022442	2-103
1022699	2-9
1022736	2-79
1022779	2-83
1022787	2-83
1022798	2-83
1022825	2-111, 2-115
1022846	2-109, 2-113
1022978	2-115
1023288	2-23
1023306	2-111
1023307	2-115
1023314	2-115
1023464	2-11
1023476	2-107
1023482	2-69
1023488	2-139
1023499	2-15
1023502	2-121, 2-127
1023545	2-153
1023569	2-11
1023606	2-141, 2-143
1023608	2-139
1023609	2-139
1023754	2-129, 2-131
1023769	2-145
1023779	2-103
1023853	2-47
1023879	3-45
1023926	2-17
1024141	2-199
1024237	3-19
1024249	2-75
1024251	2-149, 4-7
1024260	2-17, 4-13
1024274	2-73
1024287	2-13
1024425	2-15
1024464	2-15
1024478	2-17
1024535	2-121, 2-127
1024558	2-121, 2-127
1024576	2-111, 2-115
1024584	2-109, 2-113
1024586	1-1, 2-109, 2-113

Part Number	Page Number
1024599	2-121, 2-127
1024641	2-103
1024648	2-7, 2-103
1024651	2-109, 2-113
1024695	2-17
1024703	2-103
1024764	2-145
1024853	2-129
1024934	2-71
1024977	3-63
1025005	1-2, 3-7
1025100	2-99
1025101	2-208
1025132	2-153
1025133	2-153
1025140	2-81
1025151	2-109, 2-113
1025229	2-69
1025480	2-121, 2-127
1025487	2-79
1025544	2-145
1025547	2-141, 2-143
1025601	2-107
1025619	2-125
1025620	2-125
1025680	2-103
1025736	2-15
1025756	2-133
1025841	2-133
1025872	2-129
1025887	2-129
1025888	2-129
1025904	2-85
1025990	3-17
1026007	2-103
1026014	2-125
1026051	2-121, 2-127
1026080	2-95, 2-97
1026119	3-15
1026352	2-95, 2-97
1026576	2-73
1026645	2-141, 2-143
1026727	2-121
1026743	3-51, 4-24
1026825	2-15
1027007	3-51
1027039	2-127
1027218	2-9
1027233	2-83
1027237	3-51
1027267	2-9
1027290	1-1, 2-117, 3-55
1027313	2-83
1027560	3-63
1027688	2-5
1027716	1-2, 3-7
1027798	3-39, 3-41, 3-42, 3-43
1027800	3-39, 3-41, 3-42, 3-43
1027810	2-99
1027916	2-7
1027926	3-11
1027976	3-51
1027978	3-51
1028136	2-41
1028145	2-141, 2-143
1028173	2-125
1028211	2-125
1028328	2-125
1028343	2-31
1028522	2-125
1028558	2-41, 2-63, 6-25
1028559	2-41
1028635	2-111, 2-115
1028690	2-121, 2-127
1028691	2-121, 2-127
1028697	3-5
1028701	2-121, 2-127
1028753	2-63
1028769	2-13
1028772	2-13
1028823	2-151
1028924	2-69
1028929	2-41, 2-63
1028972	2-113
1028979	2-113
1028994	2-41, 2-63
1029055	3-51
1029057	3-27, 3-51
1029082	2-25, 2-27, 2-29
1029128	2-109
1029132	2-109
1029153	3-51
1029155	3-51
1029156	3-51
1029293	2-69
1029295	2-69
1029362	2-13
1029379	3-7, 3-9, 4-11
1029399	3-51
1029646	2-85
1029748	2-117
1029790	3-51
1029964	2-95, 2-97
1030017	2-9
1030404	2-139
1030441	4-30
1030444	4-30
1030617	2-117
1030709	2-147
1031011	1-2, 2-109, 2-113
1031017	2-208
1031206	2-15
1031309	2-127
1031312	2-25, 2-27, 2-29
1031439	2-23
1031553	2-37
1031557	2-19
1031566	2-61, 3-65
1031572	2-125, 3-5
1031575	2-91
1031609	2-35
1031610	2-125
1031625	2-43
1031632	2-151
1031665	2-9, 2-13, 2-15, 2-17, 2-21
1031699	2-125, 4-3
1031796	4-24
1031797	4-24
1031798	4-24
1031799	4-24
1031800	4-24
1031801	4-24
1031802	4-24
1031803	4-24
1031823	1-2, 2-109, 2-113
1031826	2-7
1031827	2-7
1032174	2-7
1032323	2-35, 2-37
1032399	2-83
1032418	2-208
1032450	2-208
1032812	2-69
1032830	3-45
1032831	3-45
1032896	3-61
1033230	2-15
1033246	2-3
1033248	2-99
1033258	2-99
1033265	2-101
1033267	2-101
1033269	1-1, 2-101
1033290	2-151
1033372	2-3
1033374	2-3
1033375	2-3
1033538	2-101
1033548	1-1, 2-101
1033549	1-1, 2-101
1033550	2-101
1033573	2-101
1033624	2-201
1033644	2-39
1033676	2-35, 2-37
1033746	2-69
1033791	3-19
1033792	3-3
1033812	2-79
1033897	2-69
1033901	2-69
1033912	2-21
1033927	2-117
1033928	2-125
1033957	3-19
1033975	2-9
1034126	3-19
1034227	2-85
1034243	2-95

Part Number	Page Number
1034255	2-117
1034270	2-75
1034328	2-101
1034409	2-79
1034436	2-125
1034444	2-125
1034448	2-149, 4-9
1034454	2-79
1034676	2-69
1034686	2-93
1034694	2-93
1034700	2-93
1034701	2-93
1034762	2-9
1034764	2-11
1034765	2-11
1034766	2-11
1034767	2-15
1034768	2-11
1034769	2-11
1034806	2-75
1034812	2-107
1034844	2-19
1034862	2-105
1034869	2-125
1034878	2-153
1035039	2-125
1035044	2-125
1035052	1-2, 2-105
1035067	1-2, 2-105
1035143	2-105
1035145	2-105
1035214	2-47
1035260	2-133
1035530	2-39
1035677	2-71
1035703	2-133
1035727	2-107
1035780	2-35, 2-37
1035794	3-19
1035796	2-69
1035976	2-43
1035997	2-9
1036220	2-15
1036227	2-21
1036240	2-91
1036249	2-21
1036271	2-85
1036345	2-15, 2-21
1036419	2-87
1036611	2-89
1036801	3-19
1036817	2-141
1036832	2-15
1036892	2-35, 2-37, 2-43, 2-45, 2-57, 2-59, 2-65, 3-65
1036899	2-147
1036901	3-17
1036902	3-17, 3-57, 3-59
1036903	3-17
1036904	3-17
1036907	3-17
1036939	2-145
1036945	2-141, 2-143
1036946	3-17
1036955	2-147
1036956	2-147
1036959	2-151
1036967	2-69
1037011	3-15
1037032	4-27
1037072	3-59
1037085	2-125
1037235	2-89
1037262	3-19
1037311	6-28
1037336	2-155
1037340	2-21
1037346	2-7, 2-9, 2-21, 2-45, 2-47, 2-65, 2-71, 2-73, 2-79, 2-91, 2-117, 2-129, 2-133, 2-151, 3-55, 3-65
1037354	2-69, 2-71, 2-151, 2-153, 3-59, 3-65
1037355	2-45, 2-65, 3-65
1037495	2-117
1037634	3-55
1037671	2-89
1037717	2-19
1037805	3-15, 4-19
1037809	3-25
1037825	3-23, 3-33
1037827	2-85
1037843	2-93
1037933	2-79
1037947	2-89
1037971	2-19
1037993	2-133
1038115	2-93, 3-11
1038116	2-123
1038121	2-93
1038123	2-93
1038126	2-93
1038134	2-93
1038137	2-99, 2-103, 2-111, 2-115, 3-11
1038159	4-27
1038203	2-23
1038258	2-95, 2-97
1038430	2-3
1038566	2-155, 4-15
1038569	2-139
1038571	3-57, 3-59
1038680	1-2, 2-105
1038681	1-2, 2-105
1038855	3-55, 4-25
1038927	2-125
1038941	2-125
1039019	3-5
1039037	3-55
1039042	3-53
1039044	3-53
1039046	3-55
1039049	2-125
1039056	3-53
1039072	2-125
1039163	2-87
1039215	2-87
1039348	2-111, 2-115, 3-55
1039356	3-19
1039357	3-19
1039620	2-101
1039622	2-101
1039623	2-101
1039705	2-15
1039753	3-59
1039757	2-117
1040187	2-21
1040216	2-141, 2-143, 3-57
1040222	2-21
1040318	2-151, 2-153
1040339	2-155
1040405	2-25
1040406	2-29
1040465	2-117
1040467	2-13, 2-17, 2-45, 2-65, 3-27, 3-47
1040512	3-57
1040628	2-145
1040629	2-145
1040630	3-57, 3-59
1040664	2-141
1040709	3-55
1040763	2-145
1040764	2-145
1040800	3-61
1040818	2-85
1040820	2-85
1040841	2-11
1040876	2-155
1040898	3-53
1040899	3-53
1041006	2-89
1041151	2-31, 2-33
1041152	2-31, 2-33
1041291	2-43
1041351	3-55
1041389	3-17
1041391	2-145, 3-55
1041477	2-117
1041822	2-13
1041920	2-89
1041935	3-53
1041952	3-55
1041953	2-121, 2-127
1042003	2-121
1042010	2-127
1042028	2-23
1042051	3-53

Part Number	Page Number
1042096	2-151
1042126	2-151
1042191	3-53, 3-55
1042499	2-5
1042500	2-5
1042504	2-5
1042579	3-55
1042640	3-67
1042686	2-99
1042710	4-30
1042772	2-27, 2-33, 3-53
1042859	3-55
1042968	3-9
1043166	2-151
1043187	2-23
1043214	2-121, 2-127
1043322	2-47
1043459	2-155
1043481	2-25, 2-31
1043660	2-41
1043897	2-43, 2-45
1043940	2-43
1044323	2-87
1044393	3-27
1044428	3-53, 3-55
1044429	3-55
1044920	2-43, 2-45
1044993	2-93
1045034	3-55
1045045	3-55
1045272	3-15
1045415	2-43, 2-45
1045419	2-43, 2-45
1045432	2-43
1045433	2-43, 2-45
1045443	2-43
1045444	3-63
1045447	2-43, 2-45
1045529	2-91
1045530	2-43, 2-45
1045599	2-43
1045759	2-147
1045764	2-43, 2-65
1045940	2-45, 2-65
1046022	2-23
1046039	2-45
1046090	2-19
1046173	3-27
1046237	2-39
1046245	2-19
1046427	2-89
1046495	2-43, 2-45
1046798	2-125
1046962	2-45, 2-65
1046976	3-9
1046980	1-2, 3-9
1046995	3-9
1047002	3-9
1047060	3-9
1047132	2-15
1047169	2-9
1047188	2-9
1047191	2-21
1047192	2-21
1047238	1-2, 3-9
1047295	2-9, 2-21
1048166	2-65, 3-65
1048295AM	1-1, 2-89
1048955	2-15
1049242	2-89
1049254	3-19, 3-29
1049259	3-19
1049355	2-45
1049887	2-45
1050003	2-208
1050295	3-45
1050436	2-141, 2-143
1051052	2-15
1051534	3-65
1052017	3-29
1052124	2-99
1052336	3-29, 4-27
1052342	2-99
1052726	3-27
1052885	2-91
1053078	3-27
1053320	2-89
1053464	4-27
1053838	2-7, 2-91, 3-13
1054382	2-47, 2-67
1054428	2-65, 3-65
1054558	2-37
1054575	2-95, 2-97
1054610	2-97
1054682	2-95
1054776	4-27
1054857	2-95, 2-97
1055106	2-23
1055153	2-97
1055170	2-29
1055377	2-39, 2-61, 3-65
1055381	2-39
1055425	2-39
1055552	2-53
1056191	3-63
1056233	2-29
1056241	2-41
1056298	2-89
1056300	2-33
1056355	2-35, 2-37
1056420	2-27
1056566	2-23
1057029	5-11
1057504	2-45
1057637	4-27
1057643	2-95, 2-97
1057707	1-2
1057708	1-2
1057710	1-2
1057711	1-2
1058753	3-65
1058777	3-65
1058935	3-29
1058963	3-27
1058988	2-198
1058996	2-17
1059091	1-2, 3-9
1059092	1-2, 3-9
1059100	2-131
1059234	4-30
1059343	2-75
1059344	2-77
1059372	3-29
1059391	3-29
1059542	2-89
1059544	2-77
1059545	2-77
1059641	2-3
1059677	3-27
1059878	4-30
1060130	2-7, 3-13
1060185	3-27
1060273	3-27
1060290	3-29
1060291	3-27
1060292	3-27
1060386	3-29
1060517	4-27
1060521	2-75
1060596	3-29
1060624	3-27
1060693	3-29
1060695	4-27
1060719	3-27
1060845	3-29
1060871	3-36
1060880	3-36
1060881	3-36
1060942	2-7
1061045	3-33
1061973	2-75
1062033	2-131
1062102	2-77
1062116	2-27, 2-33, 3-13
1062403	3-29
1062566	2-7, 2-91
1062804	3-27
1062813	2-208
10632-12	3-47
10632-13	2-91
10632-17	3-42, 3-43
10632-4	2-91, 3-27
10632-8	2-15
1063456	2-205
1063457	2-205
1064183	3-27
1064191	3-27
1064370	2-203
1064371	2-201
1064440	2-208

Part Number	Page Number
1064443	3-65
1064663	2-208
1065342	2-208
1065343	2-208
1066893	2-15
1067700	2-123
1068611	2-131
1068613	2-131
1068644	2-131
1068811	2-95, 2-97
1068812	3-9
1069019	1-2
1069020	1-2
1069241	3-45
1069253	3-45
1069385	2-107
1069562	2-99
1069580	3-47
1069662	3-47
1069755	3-47
1069761	3-47
1070324	3-47
1070348	2-51
1070402	3-47
1070426	2-61
1070431	2-61
1070434	2-65
1070619	2-61
1070732	2-67
1070751	2-49, 2-51
1070756	2-49, 2-51
1070764	2-61
1070787	2-59
1070788	2-57, 2-59
1070798	2-83
1070819	2-83
1070822	2-57, 2-59
1070833	2-57, 2-59
1070860	2-65
1070890	2-61
1070955	2-65
1071033	3-65
1071041	3-65
1071047	3-65
1071061	2-75
1071099	2-67
1071107	2-61
1071108	2-61
1071110	2-61
1071113	2-63
1071144	2-61
1071145	2-61
1071155	2-49
1071173	2-151
1071240	2-133
1071253	2-131
1071280	3-29
1071376	2-63
1071388	2-69
1071397	6-25
1071398	6-25
1071404	2-57
1071418	2-63
1071440	2-53, 2-55
1071481	2-73
1071482	2-73
1071502	2-53
1071653	2-205, 6-25
1071654	2-205, 6-25
1071727	2-61
1071785	2-65
1071852	3-59
1071868	2-9
1071895	2-198
1071947	3-36
1072408	2-53, 2-55
1072421	2-61
1072456	2-15, 4-29
1072505	3-65
1072559	2-53, 2-55
1072669	2-49, 2-51
1072815	2-15
1072878	2-125
1072882	3-5
1072883	3-5
1072885	2-125
1072995	2-155, 4-17
1072997	3-15, 4-21
1073409	3-9
1073411	3-9
1073412	3-9
1073413	1-2, 3-9
1073414	1-2, 3-9
1073415	1-2, 3-9
1073416	1-2, 3-9
1073487	2-75
1073529	2-61
1074414	2-131
1074415	2-131
1074807	2-95, 2-97
1075003	2-13
10832	2-23
10917	4-24
11399	3-5
11442-1	2-31, 2-33
11442-23	2-71
11842	2-83
11984	2-35, 2-37, 2-57, 2-59
1210807	2-7
1220185	2-5
1220235	2-5
1220236	2-5
1221543	2-5
12295	2-95, 2-97
12317	2-7, 2-93, 2-103, 3-13
12323	2-91, 3-27
13048	2-33
13534	2-95, 2-97
13698	2-151
13904	4-15, 4-17, 4-19, 4-21
13907	4-7
140916	3-47
14242	2-77
14432	2-35, 2-37, 2-57, 2-59
14838	2-5
14877	3-3, 3-5, 3-19, 3-29
150516	2-25, 2-31
150538	3-19
150540	3-19, 4-27
150709	2-71, 3-19
150713	3-19
15331	2-19
15539	2-5
15648	2-121, 2-127
15675	2-95, 2-97, 2-121, 2-127, 3-55
15678	2-43, 3-19
16213	2-83
16411	1-2
16412	1-2
16431	2-141, 2-143
16695	4-10, 4-11
16735	2-43, 2-45, 2-61
16931	2-9, 2-15, 2-19, 2-21, 2-39, 2-43, 2-45, 2-47, 2-61, 2-67, 2-69, 2-75
16968	2-13
17284	2-121, 2-127
17414	2-71
17461	2-93, 2-99, 2-111, 2-115, 3-11
17980	2-17, 2-151
19064	2-15, 2-43, 2-89, 3-49
19065	3-27
19066	2-15, 2-39, 2-73, 2-85, 3-27, 3-37, 3-39, 3-41, 3-42, 3-43, 3-51
19191	3-7, 3-9
19309	2-117
19312	2-25, 2-27, 2-29, 2-53, 2-55
19313	2-39, 3-45
19315	2-23, 2-25, 2-27, 2-29, 2-53, 2-55
19317	2-25, 2-27, 2-29
19320	2-117
19583	2-75
19760	2-71
20170	2-79
20394	3-51, 3-53
20634	2-89
20778	2-73
20833	1-1, 2-107
20944	3-5
20951	3-5, 4-27
20952	3-5
21195	2-39
21196	3-63
21197	2-83
21198	2-149

Part Number	Page Number
21601	2-105, 3-9
21602	2-105
21603	2-105, 3-9
21606	2-105
21657	4-23
21659	4-23
21851	2-15
21933	4-13
21934	4-13
21935	4-13
21936	4-9
21937	4-9
21938	4-9
21939	4-9
21942	4-9
21946	4-9
21955	4-11
21956	4-11
21958	4-11
222158	3-3
222159	2-151
222267	2-15, 2-21
222268	2-87, 2-93
222290	2-73
222375	3-33
222463	2-109, 2-113
222496	2-41, 2-63
222505	2-41, 2-63, 2-107
222516	2-121, 2-127
22290	2-17
22297	2-47, 2-67
22308-6	2-71
223080	2-15
223198	2-99, 3-27
223470	2-99, 3-7
223599	2-13
22615	3-9
22790	4-3
23146	2-7, 2-91, 3-13
23156	2-71
23211	2-85
23285	4-3
23498	2-121, 2-127, 2-129, 2-133
23524-1	2-103
23788	2-79
24012	2-41
24047	2-71
24105	3-3
24196	3-23, 3-33, 3-37, 3-39, 3-41, 3-42, 3-43
24199	3-47
24265	2-21, 3-3
24299	2-5
24339	2-75
24358	2-125, 4-3
24543	3-5
24544	3-3, 3-19, 3-29
24555	2-105, 2-107, 3-9
24698	3-29
24928-1	2-71
24976	2-23
25014	2-41, 2-63
25046	3-7, 3-9
25122	1-1, 2-153
25312	3-66
25611	3-7, 3-9
25686	2-95, 2-97
25735	2-107, 2-109, 2-113
26496	2-71
27048	2-31, 2-71
27767	2-27, 2-33
28854	4-11
29557	3-11
29558	3-11
29584	2-103
30407	2-43, 2-45, 2-65
31241	2-133
31354	4-10, 4-11
31375	4-10
31379	4-10
31383	4-10
31525	2-39
31543	3-23, 3-33
31613	1-1, 2-153
32126	2-75
32183	2-91, 2-125, 3-5
32483	2-15, 2-17, 2-25, 2-27, 2-29, 2-41, 2-63, 2-69, 2-71, 2-85, 2-133, 3-27, 3-47, 3-57, 3-59, 3-65
32485	2-23, 2-39, 2-41, 2-49, 2-51, 2-83, 2-107, 2-133, 2-149
32486	2-17, 2-23, 2-43, 2-49, 2-51, 2-77, 3-11, 3-63
32490	2-9, 2-19, 2-23, 2-25, 2-27, 2-29, 2-31, 2-43, 2-45, 2-53, 2-55, 2-63, 2-65, 2-79, 2-81, 2-83
32491	2-9, 2-15, 2-17, 2-19, 2-35, 2-37, 2-39, 2-41, 2-43, 2-45, 2-47, 2-57, 2-59, 2-61, 2-65, 2-67, 2-69, 2-71, 2-75, 2-79, 2-95, 2-97, 2-99, 2-101, 2-121, 2-125, 2-127, 2-151, 3-11, 3-15, 3-45, 3-61, 3-65
32492	2-7, 2-15, 2-41, 2-43, 2-45, 2-63, 2-65, 2-71, 2-83, 3-7, 3-9, 3-45, 3-63
32493	2-23, 2-49, 2-51
32509	4-27
32716	2-39, 2-71
32731	3-55
32746	2-5
32969	2-77
32975	2-89
32981	2-69, 2-129, 2-133
32982	3-27
32983	2-15, 2-39
32987	2-75
32988	2-39
33295	3-3
33373	2-107
33401	2-101
33580	4-5
33671	2-73
33812	2-155
33932	2-21, 2-83, 2-109, 2-113, 3-3, 3-27
34178	4-5
34323	2-133
34351	2-141, 2-143
34359	3-15
34390	2-155
34395	2-141, 2-143
34411	2-7, 2-91, 3-13
35493	4-22
35707	2-71
35710	2-71
35904	2-151
360801	2-111, 2-115, 2-125
360824	2-89, 3-61
360973	2-118
361037	3-57
361047	3-17
361071	2-13
361073	2-13
361075	2-13
361339	2-7, 2-45, 2-81, 2-85, 2-101, 3-19, 3-65
36159	2-53, 2-55
363162	2-105
36328	2-111, 2-115, 2-131
363301	2-105
363458	2-7
363976	2-9, 2-39
364441	2-105, 3-15
364587	2-85
364749	2-15
364978	2-145
365007	3-59
365095	2-123, 3-3
365164	2-123
36643	2-71, 2-83, 2-129, 2-133
36644	2-99
36658	2-89
36661	2-89
367313	2-93, 2-103
367770	2-103
368176	3-63
368391	2-15
36845	3-11
369359	3-7, 3-9, 3-63
369704	2-73

Part Number	Page Number
369745	2-35, 2-37, 2-57, 2-59
369746	1-1, 2-35, 2-37, 2-57, 2-59
369747	2-35, 2-37, 2-57, 2-59
370100	2-105
371503	6-21
371509	6-17
371562	6-17
371770	2-31, 2-33
371854	2-35, 2-37
371860	2-41
371861	2-41
371865	2-39
371866	2-23
371868	2-23
371869	2-23
371870	2-23
371871	2-39
371872	2-39
371877	2-23, 2-31, 2-33
371931	5-5
371932	5-5
371933	5-5
371934	5-5
371935	5-5
371936	5-5
371937	5-5
371940	5-8
371941	5-8
371942	5-5
371943	5-8
371944	5-5
371945	5-5
371946	5-5
371947	5-7
371948	5-7
371949	5-7
371950	5-7
371951	5-7
371952	5-7
371954	5-3
371955	5-3
371956	5-3
371957	5-3
371958	5-3
371959	5-8
371960	5-8
371961	5-11
371964	5-5
371965	5-5
371966	5-5
371967	5-5
371968	5-5
371969	5-5
371970	5-5
371971	5-5
371972	1-1, 2-23, 5-8
371973	5-8
371975	5-8
371976	5-5
371977	5-5
371978	5-5
371979	5-5
371980	5-7
371981	5-7
371983	5-7
371984	5-7
371986	5-7
371987	5-7, 5-8
371988	5-7
371990	5-3, 5-7
371991	5-7
371992	5-8
371993	5-7
371994	5-7
371995	5-8
371996	2-23, 5-7
371997	5-7
371998	5-7
371999	5-3, 5-5
372000	5-7
372001	5-7
372002	2-23, 5-7
372003	5-7
372004	5-7
372005	5-7
372007	5-3
372008	5-3
372009	5-11
372010	5-11
372011	5-11
372012	5-11
372013	5-11
372014	5-11
372015	5-11
372016	5-11
372017	5-11
372018	5-3
372019	5-3
372020	5-9, 6-16
372021	5-9
372022	5-3
372023	5-3
372024	5-3
372025	5-3
372026	5-3
372027	5-3
372028	5-3
372029	5-3
372030	5-3
372031	5-3
372032	5-3
372033	5-3
372034	5-3
372035	5-3
372036	5-3
372037	5-3
372038	5-3
372039	5-3
372040	5-11
372041	5-11
372043	5-11
372044	5-11
372046	5-11
372047	5-3
372048	5-3
372049	5-9
372050	5-9
372051	5-9
372052	5-9
372053	5-9
372055	5-12
372056	5-12
372057	5-12
372058	5-12
372059	5-12
372060	5-12
372066	5-9
372235	2-205
372236	2-205
372237	2-205
372440	1-1, 2-69
372470	2-25, 2-27, 2-29, 2-53, 2-55
372492	6-25
372493	2-25, 2-27, 2-29, 6-25
372510	2-29
372528	2-31
372529	2-31, 2-33
372534	2-25, 2-29
372539	2-31, 2-33
372543	2-25, 2-27, 2-29
372544	2-25, 2-27
372545	2-25, 2-27
372547	2-25, 2-27, 2-29
372548	2-25, 2-27, 2-29
372549	2-25, 2-27, 2-29
372550	2-25, 2-27, 2-29
372556	2-23
372557	2-39
372560	5-8
372567	5-7
372571	1-1
372572	5-7
372573	5-3
372574	5-3
372575	1-1, 5-12
372579	2-29
372603	1-1, 5-12
372615	1-1, 2-31
372616	5-11
372862	2-23
372882	5-3
372891	6-25
372953	2-23
373217	4-5
373226	4-5
373236	4-5
373260	4-5
373291	4-5

Part Number	Page Number
373297	4-5
373298	4-5
373299	4-5
373317	4-7
373327	4-7
373346	4-7
373347	4-7
373348	4-7
373389	4-7
373391	4-7
373393	4-7
373394	4-7
373395	4-7
373398	4-7
373402	4-7
373413	4-7
373427	4-7
373429	4-7
373434	4-7
373493	4-7
373494	4-7
373633	4-15, 4-17, 4-19, 4-21
373637	4-15, 4-17
373639	4-15, 4-17
373640	4-15, 4-17, 4-19, 4-21
373642	4-15, 4-17, 4-19, 4-21
373646	4-19, 4-21
373647	2-155, 4-15, 4-17, 4-19, 4-21
373648	4-15, 4-17, 4-19, 4-21
373656	4-15, 4-17, 4-19, 4-21
373657	4-15, 4-17, 4-19, 4-21
373658	4-15, 4-17, 4-19, 4-21
373660	4-15, 4-17
373661	4-19, 4-21
373662	4-19, 4-21
373663	4-15, 4-17, 4-19, 4-21
373664	4-15, 4-19
373665	4-15, 4-17
373666	4-15, 4-17
373667	4-15, 4-17
373668	4-15, 4-17
373670	4-15, 4-17, 4-19, 4-21
373671	4-15, 4-17
373672	4-15, 4-19
373673	4-15, 4-19
373678	4-7
373679	4-7
373680	4-7
373681	4-7
373683	4-19, 4-21
373684	4-15, 4-17
373688	4-15, 4-17
374224	2-208
374560	2-75
374563	2-75
375321	3-51
375322	3-3
37555	4-10, 4-11
37616	4-5
377236	3-17
377334	3-55
377349	2-117, 3-55
377359	3-7
377537	1-2
377538	1-2
377540	1-2
37756	4-5
379609	2-75, 4-5
379791	2-93
379870	2-111, 2-115
381391	2-57, 2-59
381502	2-79
381858	3-57
381910	2-79
382099	2-99
382224	2-79
382320	2-117, 2-125, 3-66
382516	2-13
38255	4-5
383165	2-13
384418	2-21, 2-109, 2-113
384419	2-21
384442	2-39, 2-41
384961	5-5
384962	5-8
384963	5-5
384964	5-5
384966	5-7
384968	5-7
384970	2-31, 2-33
384971	2-31, 2-33
384972	2-25, 2-27, 2-29
384973	2-31, 2-33
384974	2-25, 2-27, 2-29
384975	2-31
384977	2-31, 2-33
384978	2-31, 2-33
384979	2-31, 2-33, 6-22, 6-29
384980	2-29
384983	2-31
384984	2-31, 2-33
384986	2-31, 2-33
384990	2-205
384991	2-29
384992	2-25, 2-27
384995	2-25, 2-27, 2-29
384996	2-29
384997	2-205
384998	2-205
384999	2-205
385001	6-15
385011	6-22
385015	6-15, 6-16, 6-19, 6-21, 6-22
385029	2-23
385644	3-21, 3-31, 3-33, 3-51
385685	2-117, 3-55
386088	2-111, 2-115
386264	2-105
386298	2-105, 3-9
386652	3-5
386847	2-103
387237	2-105
387281	2-145
387433	2-105
387500	2-105
388153	2-17
388552	5-11
38968	4-5
390994	2-117
39210	2-97, 2-155, 3-15
392171	2-13
392609	2-129
392645	2-71
39277	2-35, 2-37, 2-43, 2-45, 2-57, 2-59, 2-61, 2-65, 2-121, 2-127, 2-131
39278	2-83
39279	2-79
39281	2-61, 2-107
39283	2-7, 2-9, 2-23, 2-45
39284	2-41, 2-63, 3-63
39285	2-133
39308	2-111, 2-115
39311	2-9, 2-39
39312	2-89
393135	2-109, 2-113, 3-61
393209	2-39
393215	2-75
393255	3-13
39349	2-9, 2-15, 2-21, 2-39, 2-61, 2-63, 2-83, 2-111, 2-115, 2-121, 2-127
39350	2-75
393982	1-1, 2-49, 2-51
394916	2-205
39527	2-95, 2-97, 4-10
39534	2-129, 2-133
395973	3-15
395974	2-155, 3-15
396209	3-59
396221	2-139
396476	3-15
39785	2-39
39810	2-23
39811	2-99
398279	2-35, 2-37, 2-57, 2-59
398500	3-51
398501	2-13
398508	2-13
39924	2-91
40362	2-153
40607	2-91
40755	3-57, 3-59
41130	2-129
41141	2-101
41142	2-39
41169	2-81, 2-83

Part Number	Page Number
41178	2-43, 2-45, 2-65, 2-101, 2-133
41185	2-111, 2-115
41186	2-61, 2-83, 2-121, 2-127
41187	2-41, 2-83, 2-85, 2-103, 2-111, 2-115
41305	2-85
41346	3-11
41359	3-27
41361	2-23
41399	2-81
41430	2-43, 2-45, 2-65, 2-71, 2-133, 3-45, 3-63
41445	2-111, 2-115
41579	4-27
41619	2-99, 2-103, 2-111, 2-115
42011	2-39
42120	2-99
42120-1	2-85
42133A	3-3, 3-19, 3-29
42180	2-81
42215	2-133
42223	2-75
42226	2-129, 2-153, 2-155, 3-15
42227	3-57, 3-59
42467	2-83
43555	2-105, 2-121, 2-127
43844	2-47, 2-67, 2-69, 3-3, 3-5, 3-19, 3-29
44868	2-95, 2-97, 2-133, 2-149, 3-15
44869	2-133, 2-149, 3-15
44961	4-27
45142	3-55
45622	4-5
45623	4-5
45628	4-10, 4-11
46236	3-39, 3-41
46481	2-151
46482	2-153, 2-155
46559	2-83
46563	2-79
46785-1	2-103
46800	3-7
47504	3-15
47512	2-149
47513	2-131, 2-149
47522	2-75, 3-17
47585	2-17
47638	3-57, 3-59
47719	3-13
47752	2-151
47801	2-75
48079	2-83
48126	2-69
48697	3-55
48790	3-29
48813	4-22
48985	2-99, 3-11
48996	2-39
48998	2-61
49266	2-13, 2-45, 2-75, 2-97, 3-29, 3-42, 3-43, 3-53
49697	2-109, 2-113
49800	2-15, 2-43
49883	2-61
49933	2-129, 2-155
50178	3-13
50335	2-23, 2-83
50544	2-123
50646	2-91
50901	3-29
50960	2-133
51109	2-79
51176	2-23, 2-49, 2-51
51305	2-47, 2-67
51338	2-75, 2-77
51339	2-75, 2-77
51560-5	2-35, 2-37, 2-57, 2-59
51824	2-99
51839	2-25, 2-27, 2-31, 2-33
52405	4-5
53076	2-149
53400-1	2-71
53400-4	2-71
53466	2-7, 2-9, 2-73, 2-151, 3-55
53485	2-133, 4-22
53947	2-83
53953	2-83
54017	2-139
54051	2-75
54052	2-75
54087	2-75
54095	4-22
54205	2-83
54274	2-43, 2-45, 2-65, 2-129, 2-131, 2-133
54275A	2-129, 2-133
54333	2-25, 2-31, 2-57, 2-59, 2-69, 2-73, 3-13, 3-19, 3-21, 3-23, 3-29, 3-31, 3-33, 3-51
54390	2-77
54577	2-77
54607	2-79
54615	2-125
54655	2-83
54861	2-129
55272	3-39, 3-41, 3-42, 3-43
55455	2-153
55586	2-95, 2-97, 2-155, 3-15
55685	3-15, 3-57, 3-59
55845	3-49
55926	4-7
56078	2-95, 2-97
56185	2-17
56186	2-201, 3-19, 3-27, 3-51, 3-53
56690	2-17, 2-153, 3-15, 3-17
56692	2-131
56820	2-17, 2-155
56821	3-7, 3-9
56835	2-17
56992	2-13
57189	2-129
57248	3-19
57297	2-71
57315	2-75
57569	2-65
57702	3-63, 3-65
57804	2-73, 2-205
57946	2-145
58311	2-79
58366	2-47
58494	2-15
58589	2-71
58590	2-71
58592	2-153
58819	2-7, 2-9, 2-81
58842	2-75
58979	2-125
59009	2-79
59156	2-71, 3-11
59194	2-111
59195	2-115
59378	4-22
59542	2-85
59577	2-17, 2-155
59633	3-11
59649	2-133
59668	2-81
59735	2-133
59886	3-5
59967	2-133
60090	2-151, 3-15
60295	2-73
607775	4-27
61490	4-10, 4-11
61869	2-27
62471	2-151
62595-15	2-69
630164	3-29
63175-1	3-11
63233	3-11
63234	2-83
63244-2	3-3
63430	3-49
63448	3-49
63451	3-49
63468	2-107
63810	2-25, 2-27, 2-31, 2-33, 2-123, 3-3, 3-5, 3-13, 3-21, 3-23, 3-31, 3-33, 3-51, 3-55

Part Number	Page Number
63923	4-23
63987-1	3-29
64425	2-107, 2-109, 2-111, 2-113, 2-115, 3-7
64778	3-29, 3-51
65145-1	2-149
65180	2-107
65215	2-153
65230	4-11
65241	4-10
65441	2-81
65580	3-49, 3-53
65581	3-29
65695	2-95, 2-97
66211	2-77
66213	2-77
67004	3-49, 3-53
67555	2-99
67767	2-31, 2-71, 2-81
67811	2-149
68106	2-23
68866	2-81
68869	2-73
69173	2-155
69234	2-59, 2-71, 2-151
69582	2-79
69657	3-49
69659	3-49
69785	2-117, 3-3
70096	4-7
70100	4-7
70157	2-131
70158	2-77
70161	2-77
70563	2-95, 2-97
70622	2-17
70623	2-17
70709	2-17
70717	2-17
71204	2-103
71340	2-75
71341	2-75
71367	2-79
71369	2-99
71556	2-141, 2-143
71579	2-101
71607	2-111, 2-115
71726	2-153
71727	2-155
71729	2-95, 2-97, 4-10
71741	2-141, 2-143, 3-57
71868	3-11
71869	3-11
71874	3-11
71941	2-19
72897	2-85
72926	2-75
72968	3-29, 3-49, 3-53
72970	2-17
73027	2-17
73260	3-3, 4-23
73281	2-75
73342	4-3
73411	2-83
73433	3-3
73468	3-19, 3-29
73471	2-47, 2-67
73736	2-13
74090	2-121, 2-127
74094	4-10, 4-11
74095	4-10
74098	4-10, 4-15, 4-17
74099	4-10
74100	4-10, 4-11
74122	4-5
74123	4-5
74125	4-5
74165	4-5
74166	4-5
74167	4-5
74168	4-5
74180	4-7
74183	4-13
74185	4-13
74193	4-13
74196	4-13
74222	4-13
74225	4-7
74226	4-7
74232	4-13
74233	2-129, 4-22
74237	4-7
74243	4-13
74244	4-13
74245	4-13
74250	4-10, 4-11
74352	2-19
74440	2-83
74454	2-133
75456-3	2-129
75456-4	2-129
75968	2-17
76099	2-101, 3-3, 3-19
761490	2-7, 3-13
762282	2-27, 2-33
762514	2-73
763042	2-87
763090	2-99
763115	3-33, 3-42, 3-43
763116	2-89, 3-23, 3-29
763147	3-47
76315	2-131
76570	2-61, 2-121, 2-127
76888	2-15
76958	2-39
769785	3-51
77003	4-15, 4-17
77005	4-15, 4-17, 4-19, 4-21
77097	2-85, 2-93, 2-103, 2-111, 2-115, 2-155, 3-11
77098	2-99, 2-131, 2-133, 3-11
77221	2-208
77345	2-75
78122	2-71
78398	3-3, 4-3
78829	4-3
78830	4-3
78833	4-3
78836	4-3
78838	4-3
78839	4-3
78840	4-3
78841	4-3
78842	4-3
78843	4-3
78875	4-23
78950	4-24
78951	4-24
78952	4-24
79273-1	3-19, 3-29
79273-2	2-123, 3-3
79380	2-129
79381	2-47, 2-67
79484	3-3
79497	3-3
79506	2-121, 2-127
79729	4-5
79828	4-5
80395	2-105, 2-121, 2-127
80409	2-107
80950	2-107
81784	2-111, 2-115
81952	2-107
82727	2-9
82739	2-91
82832	2-75
82839	3-13
83578	2-25, 2-31
83874	1-2, 2-105
83879	2-83
84170	2-83
86508	3-3
86636	2-125
86751	2-79
86759	3-7
86866	2-99
87536	2-13
87631	2-95, 2-97
87738	2-47, 2-67
87816	2-85, 2-111, 2-115
87866	1-1, 2-13
9000355	2-69
9000845	3-41, 3-43
9000846	3-39, 3-42
9000879	3-39, 3-41, 3-42, 3-43
9000990	2-155

Part Number	Page Number
9001314	3-45
9001316	3-66
9001321	3-37
9001327	3-39
9001331	3-41
9001717	3-43
9001718	3-42
9002380	2-9
9002381	2-9
9002391	2-13
9002392	2-13
9002398	2-153
9002409	2-9
9002435	2-13
9002553	1-1
9002554	1-1
9002555	1-1
9002613	1-1
9002683	2-133
9002684	2-129
9002708	4-3
9002709	4-3
9003009	4-30
9003313	2-125
9003345	5-3
9003390	2-25, 2-27
9003391	2-29
9003422	2-9
9003423	2-9
9003425	2-9
9003426	2-9
9003428	2-9
9003429	2-9
9003431	2-9
9003432	2-9
9003433	2-9
9003434	2-9
9003435	2-9
9003436	2-9
9003453	2-13
9003455	2-129
9003461	2-129
9003610	2-69
9003793	2-121
9003794	2-127
9003832	2-41
9003926	3-67
9003943	3-67
9003944	3-67
9003945	3-67
9003946	3-67
9003947	3-67
9003987	2-7
9003988	2-7
9003989	2-7
9003992	2-117
9003994	2-117
9003995	2-117
9003996	2-117
9004029	3-63
9004031	3-51
9004071	3-49
9004272	4-25
9004288	4-25
9004289	4-25
9004290	4-25
9004291	4-25
9004292	4-25
9004326	2-43
9004473	4-9
9004475	4-15, 4-17
9004492	2-9
9004496	2-105
9004674	5-11
9004675	5-11
9004676	3-67
9004677	3-67
9004678	3-67
9004679	3-67
9004680	3-67
9004681	3-67
9004682	3-67
9004683	3-67
9004684	3-67
9004685	3-67
9004686	3-67
9004687	3-67
9004688	3-67
9004689	3-67
9004690	3-67
9004691	3-67
9004692	3-67
9004693	3-67
9004694	3-67
9004695	3-67
9004696	3-67
9004697	3-67
9004698	3-67
9004699	3-67
9004700	3-67
9004701	3-67
9004702	3-67
9004880	2-13
9004983	2-41
9004986	2-41
9004987	2-43
9004988	2-43
9004989	2-7
9004990	2-7
9004991	2-7
9004992	2-7
9006257	3-67
9006334	2-7, 2-91, 3-13
9006384	2-97
9006398	2-95, 2-97
9006618	2-29, 6-30
9006619	2-27, 2-29, 6-28
9006620	2-33, 6-29
9006634	2-23
9006635	2-23
9006811	2-45
9006812	2-45
9006813	2-45
9006895	2-23
9006917	2-39
9007088	2-39
9007131	3-37
9007142	2-149
9007143	2-149
9007380	1-1, 2-33, 6-29
9007381	1-1
9007382	1-1
9007423	2-29, 6-30
9007424	2-29, 6-30
9007513	2-7
9007552	2-33
9007553	2-33
9007882	3-27, 4-27
9007883	4-27
9007912	2-13
9007913	2-13
9008193	6-29
9008197	2-23, 5-7
9008248	2-75
9008395	2-23
9008757	4-30
9008804	6-29
9008805	6-25, 6-29
9008806	6-30
9008807	6-30
9008808	6-30
9008848	4-30
9008868	3-19, 4-30
9010085	3-47
9010086	3-47
9010096	2-65
9010097	2-65
9010215	6-22
9010217	6-20
9010219	6-20
9010222	6-17
9010223	6-17
9010224	6-17
9010225	6-17
9010226	6-17
9010227	6-17
9010228	6-17
9010229	6-17, 6-21
9010230	6-17
9010231	6-17
9010232	6-18
9010233	6-18
9010234	6-18
9010235	6-18
9010236	6-18
9010237	6-18
9010238	6-18
9010239	6-16, 6-18
9010240	6-18, 6-19
9010241	6-18

Part Number	Page Number
9010242	6-18
9010243	6-19
9010244	6-19
9010245	6-20
9010246	6-20
9010247	6-25
9010248	6-25
9010249	6-25
9010250	6-9
9010251	6-9
9010252	6-9
9010253	6-9, 6-21
9010254	6-9
9010255	6-25
9010256	6-25
9010257	6-25
9010258	6-25
9010260	6-25
9010261	6-25
9010262	6-16, 6-25, 6-29
9010263	6-25
9010264	6-25, 6-29
9010266	6-27, 6-28
9010267	6-28
9010268	6-27, 6-28
9010269	6-28
9010270	6-28
9010271	6-28
9010272	6-29
9010273	6-29
9010274	6-29
9010275	6-29
9010276	6-29
9010277	6-29
9010278	6-29
9010279	6-29
9010280	6-29
9010281	6-15
9010282	6-15
9010283	6-15
9010284	6-15
9010285	6-15
9010286	6-15
9010287	6-15
9010288	6-15
9010289	6-22, 6-23
9010290	6-22
9010291	6-22
9010293	6-22
9010294	6-22
9010295	6-22
9010296	6-16
9010297	6-16
9010298	6-16
9010302	6-16
9010303	6-16
9010305	6-23
9010306	6-23, 6-26
9010307	6-23
9010308	6-23
9010309	6-23
9010310	6-23
9010311	6-7
9010312	6-7
9010313	6-7
9010314	6-30
9010317	6-29
9010327	6-26
9010330	6-27
9010331	6-27
9010359	6-18
9010360	6-18
9010366	6-25
9010367	6-25
9010371	6-21
9010372	6-21
9010373	6-21
9010374	6-21
9010375	6-21
9010376	6-21
9010377	6-21
9010380	6-21
9010382	6-15
9010383	6-15
9010384	6-15
9010419	6-3
9010420	6-3
9010421	6-3
9010422	6-3
9010423	6-3
9010424	6-3
9010425	6-3
9010426	6-3, 6-12
9010427	6-3
9010428	6-3
9010429	6-3
9010430	6-3
9010431	6-3, 6-5
9010432	6-3
9010433	6-3
9010434	6-3
9010435	6-3
9010436	6-3
9010437	6-3
9010438	6-3
9010439	6-3
9010440	6-3
9010441	6-3, 6-5
9010442	6-3
9010443	6-3
9010444	6-3
9010445	6-3
9010446	6-3
9010447	6-3
9010448	6-3
9010449	6-3
9010450	6-3
9010451	6-3
9010452	6-3
9010453	6-3
9010454	6-3
9010455	6-3
9010456	6-3
9010457	6-3
9010458	6-3
9010459	6-3
9010460	6-4
9010461	6-4
9010462	6-4
9010463	6-4
9010464	6-4
9010465	6-4
9010466	6-4
9010467	6-5
9010468	6-5
9010469	6-5
9010470	6-5
9010471	6-5
9010473	6-5
9010480	6-5
9010481	6-5
9010482	6-5
9010483	6-5
9010484	6-5
9010485	6-5
9010487	6-7
9010488	6-7
9010489	6-7
9010490	6-7
9010491	6-7, 6-9
9010492	6-7
9010493	6-7
9010494	6-7
9010495	6-7
9010496	6-7
9010497	6-7
9010498	6-7
9010502	6-7
9010503	6-7, 6-13
9010504	6-7
9010505	6-7
9010506	6-7
9010507	6-7
9010508	6-7
9010511	6-7
9010512	6-7
9010513	6-10
9010514	6-10
9010515	6-10
9010516	6-10
9010517	6-10
9010518	6-10
9010519	6-10
9010520	6-10
9010521	6-10
9010522	6-10
9010523	6-10
9010524	6-10
9010525	6-10
9010526	6-10

Part Number	Page Number
9010527	6-10
9010528	6-10
9010529	6-10
9010530	6-9
9010531	6-9
9010532	6-9
9010533	6-9
9010534	6-9
9010535	6-9
9010536	6-9
9010537	6-9
9010538	6-9
9010539	6-9
9010540	6-9
9010541	6-9
9010542	6-9
9010543	6-9
9010544	6-9
9010545	6-9
9010546	6-9
9010547	6-9
9010548	6-9
9010549	6-9
9010550	6-9
9010551	6-9
9010552	6-9
9010554	6-9
9010555	6-9
9010556	6-9
9010557	6-9
9010559	6-9
9010560	6-9
9010561	6-9
9010562	6-9
9010563	6-9
9010564	6-9
9010565	6-9
9010567	6-9
9010568	6-9
9010569	6-9
9010570	6-11
9010571	6-11
9010572	6-11
9010574	6-11
9010575	6-11
9010576	6-11
9010577	6-11
9010578	6-11
9010579	6-11
9010580	6-11
9010581	6-12
9010582	6-12
9010583	6-12
9010585	6-12
9010586	6-12
9010587	6-12
9010589	6-12
9010590	6-12
9010591	6-12
9010592	6-12
9010593	6-12
9010594	6-12
9010595	6-12
9010596	6-12
9010597	6-12
9010598	6-12
9010599	6-12
9010600	6-11, 6-12
9010601	6-12
9010602	6-13
9010603	6-13
9010604	6-13
9010606	6-13, 6-15
9010607	6-13
9010609	6-13
9010610	6-13
9010612	6-13
9010613	6-15
9010615	6-15
9010617	6-15
9010618	6-15
9010619	6-16
9010622	1-1, 6-19
9010623	6-17
9010624	6-17
9010625	6-17
9010626	6-29
9010627	6-21
9010628	6-21
9010629	6-21
9010630	6-21
9010631	6-21
9010634	2-29, 6-30
9010635	3-67
9010904	2-67
9010905	6-22
9010910	6-22
9010988	3-65
9011343	4-17, 4-21
9011345	4-17, 4-21
9011346	4-17, 4-21
9011347	4-17, 4-21
9011428	3-67
9012585	4-29
9012587	4-29
9012589	4-29
9012590	4-29
9012591	4-29
9012592	4-29
9012593	4-29
9012594	4-29
9012595	4-29
9012597	2-41
9012832	2-95, 2-97
9013159	2-63
9014160, 6-19	
9014202	2-49, 2-51
9014260	4-25
9014281	3-29
9014662	2-5
9014666	2-5
9014867	3-61
99321	1-2

PART DESCRIPTION TO PAGE NUMBER CROSS REFERENCE LIST

A

Ace, Thrust, Motor, Hyd [En], 4-11
Actuator [Mit , Bosch], 6-27, 6-28
Actuator, Valve, By-Pass [En], 4-7
Adapter, 6-28
Adapter , 2-27, 2-29
Adapter, Filter, Oil, Remote [Mit], 6-21
Adapter, Intake, Throttle Body, 2-25, 2-29
Adapter, Rod-End, Side Brush, 3-11
Adapter, Valve, 400mm [Bosch], 2-29
Adjuster Assy, Lash, 6-9
Alarm Assy, Backup, 12/48Vdc, 3-37
Alarm Kit, Backup, Ci [M20/T20/M30], 3-37
Alarm, 9-48vdc, 95 Db(A) [Ec-H20], 3-27
Alarm, Warning [Sonalert, St628], 2-73
Alternator, 12vdc 075a [Multi Grv], 2-39
Alternator, 7si [Mit Df Sur-Belt], 6-20
Angle, Lh, 2-103
Angle, Mtg, 2-83
Angle, Mtg, Antenna, Telem, 3-47
Angle, Retainer, 2-87
Angle, Rh, 2-103
Angle, Sppt, Fan, 2-129, 2-131
Angle, Sppt, Tank, Rear, 2-117
Antenna, Telem, 110 In [Gprs], 3-47
Arm [Positioning], 2-83
Arm Assy, Rocker [A], 6-9
Arm Assy, Rocker [B], 6-9
Arm Assy, Rocker [C], 6-9
Arm Wldt, Alternator [Mit 2013], 2-61
Arm Wldt, Lift, Sqge, Lh, 2-115
Arm Wldt, Safety, Sppt, Seat, .38d 06.5d, 2-15
Arm Wldt, Safety, Sppt, Seat, .38d 10.1l, 2-125
Arm Wldt, Sqge, Lift, Rh, 2-111
Arm, Cntrl, Pintle, Centering, 2-83
Arm, Link, 3-11
Arm, Pinch, 2-121, 2-127
Arm, Pintle, 2-83
Arm, Rocker, Valve, 5-3
Arm, Sqge, Side, Lh, 2-115
Arm, Sqge, Side, Rh, 2-111
Armrest, 4-29
Armrest, Rh, 2-15

B

Bag, Power, 3-49, 3-53
Ball, Camshaft, 5-11
Bar Wldt, Retainer, Sqge, Rear, 2-105
Bar, Flat, Ss 0.06, 00.50 X 10.00l, 2sl, 2-13
Bar, Flat, Stl 0.19, 01.50 X 04.1l, 2-75
Bar, Isolator, Vacfan, 2-133
Bar, Mtg, Hppr, 2-87
Bar, Mtg, Hppr Cover, 2-89
Bar, Retainer, 3-7
Bar, Rnd, Plstc, 0.31d 17.0l, 2-117
Bar, Tensioner, Mtg [Mit 2.0/2.4l], 6-17
Battery, Wet, 12vdc 0475cca, 2-73
Bearing Kit [Cl], 4-13
Bearing Kit, Cshft, 1.989-1.995mm (Brown), 5-5
Bearing Kit, Cshft, 1.989-1.995mm (Green Blue), 5-5
Bearing Kit, Cshft, 1.995-2.001mm (Brown Blue), 5-5
Bearing Kit, Cshft, 1.995-2.001mm (Green), 5-5
Bearing Kit, Cshft, 2.114-2.120mm, 5-5
Bearing Kit, Cshft, 2.120-2.126mm, 5-5
Bearing Kit, Rod, Connecting, Std, 5-5
Bearing, Ball, 0.98b 2.05d 0.59w, 2-95, 2-97
Bearing, Ball, 20mm B 42mm D 12mm W, 2-39, 2-61, 3-65
Bearing, Cone, 1.38b 0.71w, 2-75, 2-77
Bearing, Cone, Pump, Hyd, 4-7
Bearing, Cshft [Black Std 3], 6-3
Bearing, Cshft [Green Std 3], 6-3
Bearing, Cshft [Lan Std 1,2,4,5], 6-3
Bearing, Cshft [Lan Std 3], 6-3
Bearing, Cshft [No Color Std 3], 6-3
Bearing, Cshft [Red Std 1,2,4,5], 6-3
Bearing, Cshft [Yellow Std 3], 6-3
Bearing, Cshft [Green Std 1,2,4,5], 6-3
Bearing, Cshft [Yellow Std 1,2,4,5], 6-3
Bearing, Cshft[No Color Std 1,2,4,5], 6-3
Bearing, Cup, 4-7
Bearing, Cup, 2.56d 0.55w, 2-75, 2-77
Bearing, Flng, 2hole, 0.50b, 2-17
Bearing, Flng, 2hole, 0.50b [Nyl], 2-17
Bearing, Oversize [1.0], 6-3
Bearing, Pillowblock, 1.02b [Solid Pye], 2-79
Bearing, Rod, Connect [Lan Std], 6-10
Bearing, Rod, Connect [No Color Std], 6-10
Bearing, Rod, Connect [Yellow Std], 6-10
Bearing, Self Align, 0.75b 1.25d, 2-99
Bearing, Self Align, 1.25b 2.00d, 2-85
Bearing, Shaft, Balancer [Ovrsz], 6-3
Bearing, Shaft, Std, Balancer, 6-3
Bearing, Split, 1.00b, 2-79
Bearing, Std, Balancer, 6-3
Bearing, Thrust, 4-11
Bearing, Thrust, 0.53b 1.00d 0.03w, 3-11
Bearing, Thrust, Cshft, 6-3
Bearing, Thrust, Pump, Hyd, 4-7
Bellcrank, Lift, Sqge, 2-103
Bellows, Seat, 4-29
Belt, Ribbed, 38.5l, 2-39
Belt, Ribbed, 39.0l, 1-1
Belt, Ribbed, Alternator, 41.5l, 2-61
Belt, Ribbed, Fan, 42.13l, 2-61
Belt, Timing, 5-11, 6-9, 6-11
Blade, Sqge, .38 3.50W 058.0L [Linard], 2-105
Blade, Sqge, .38 3.50W 058.7L, Ure (Option), 2-105
Blade, Sqge, .38 3.55w 038.3l, Linatex, 2-109, 2-113
Blade, Sqge, .38 3.55w 038.3l, Ure (Option), 2-109, 2-113
Blade, Sqge, .38 4.00W 063.0L, Linatex, 2-105
Blade, Sqge, .38 4.00W 063.2L, Ure (Option), 2-105
Blade, Sqge, Side Brush, Linatex, 1-2, 3-9
Blade, Sqge, Side Brush, Urethane, 1-2, 3-9
Block Assy, Cylinder, 6-3
Block, Centering, 2-7, 2-103
Block, Short, Eng, W/ Piston & Ring, 5-5
Block, Spacer, 2-61
Bolt, 6-7, 6-21
Bolt, 3/8-16 X 1 1/4 Hxhd [Mit], 6-17
Bolt, 3/8-16 X 4.5 [Mit], 6-17
Bolt, Belt, Balancer, Train, 6-11
Bolt, Bracket, Sensor,Cshft Position, 5-7
Bolt, Bracket,Screen,Oil Pump,M6x1x1, 5-7
Bolt, Camshaft Cover, 5-3
Bolt, Cap, Bearing, 6-3
Bolt, Carriage, M06 X 1.0 X 30, 2-93
Bolt, Carriage, M06 X 1.00 X 40, 4.6, 3-27
Bolt, Carriage, M10 X 1.50 X 70, 2-107
Bolt, Connecting, 6-10
Bolt, Connecting Rod, 5-5
Bolt, Cover, Camshaft, M6 X 1 X 22, 5-11
Bolt, Cover, Oil Pump, M6 X 14, 5-7
Bolt, Cover, Water Pump, 5-7
Bolt, Eng Cover, M6 X 1 X 13, 5-11
Bolt, Eye, .25-20 X 1.40 X .25 Eye, 2-83
Bolt, Eye, M08 X 1.25 X 070mm, 05.50 Eye, 2-111, 2-115
Bolt, Eye, M10 X 1.50 X 064mm, 07.10 Eye, 2-103
Bolt, Flange, 6-3, 6-5, 6-7, 6-9, 6-11, 6-12, 6-13, 6-15
Bolt, Flywheel, 5-5
Bolt, Flywheel [Mit 20/24m], 6-18
Bolt, Head. Cyl, 5-3
Bolt, Hsng, Thermostat, 5-3
Bolt, M08 X 1.25 X 25mm, 5-5
Bolt, M10 X 1.50 X 75mm, 5-5
Bolt, M10-1.25 X 20 Hxhd [Mit], 6-25
Bolt, M10-1.25 X 30 Soc Hd [Mit], 6-18
Bolt, M10-1.25 X 45 Soc Hd [Mit], 6-18
Bolt, M10-1.50 X 30 [Mit], 6-20
Bolt, M10x1.5, 4-9
Bolt, M12-1.75 X 25, Hex Hd [Mit], 6-18
Bolt, M6-1.0 X 10 Fl Hd [Mit], 6-16, 6-25, 6-29
Bolt, M6-1.0 X 12 Fl Hd Pl [Mit], 6-25
Bolt, M6-1.0 X 16 Fl Hd [Mit], 6-25
Bolt, M6-1.0 X 20 Fl Hd [Mit], 6-18, 6-19
Bolt, M6-1.0 X 25 Soc Hd [Mit], 6-28
Bolt, M6-1.0 X 30 Fl Hd [Mit], 6-25
Bolt, M6-1.0 X 45, Skt Hd [Mit], 6-27
Bolt, M6-1.0 X 85 Soc Hd [Mit], 6-28

Bolt, M8-1.25 X 12 [Mit], 6-23
Bolt, M8-1.25 X 15, Hx Hd [Mit], 6-18
Bolt, M8-1.25 X 16 Fl Hd [Mit], 6-29
Bolt, M8-1.25 X 16, Soc Hd [Mit], 6-26
Bolt, M8-1.25 X 20 Fl Hd [Mit], 6-17
Bolt, M8-1.25 X 25 [Mit], 6-17, 6-21
Bolt, M8-1.25 X 25 Flg Hd [Mit], 6-23
Bolt, M8-1.25 X 25 Soc Hd [Mit], 6-17
Bolt, M8-1.25 X 55 Fi Hd [Mit], 6-9
Bolt, M8-1.25 X 65 Hxhd [Mit], 6-9
Bolt, M8-1.25 X 70 Hxhd [Mit], 6-9, 6-21
Bolt, Manifold, Inlet, 6-15
Bolt, Motor, Hyd, 4-5
Bolt, Oil Pump Screen/Camshaft Cover, 5-7
Bolt, Pan, Oil, 5-8
Bolt, Pulley, Cshft, 5-5
Bolt, Pump, Oil, 5-7
Bolt, Retainer, Camshaft, M6 X 1 X 16, 5-11
Bolt, Rocker, Cover, 6-4
Bolt, Seal, 6-9
Bolt, Sensor, Position, Cshft, 5-7
Bolt, Shield, Manifold, Exhaust, 5-9
Bolt, Shld, .31d X 1.00, .25-20, 2-83
Bolt, Shld, 1.37d X 5.13l,1.1-18 Drilled, 2-75
Bolt, Soc Head, M5 X 80 X 35, 2-29
Bolt, Sprocket, Camshaft, M10x1.25x60, 5-11
Bolt, Sprocket, Cshft, 6-10
Bolt, Tensioner [GM], 5-11
Bolt, Tensioner, Timing Belt,M8x1.25x48, 5-11
Bolt, Tube [Pvc], M6 X 1 X 15, 5-3
Bolt, U, .25-20 X 2.00, 1.10id, 3-55
Bolt, Washer, 6-9, 6-10, 6-12, 6-17
Boot, .63id .29l .90w, 2-13
Boot, Bellows, 3.1l 4.4w 2.8h 1hole, Neo, 2-17
Boot, Circuitbreaker, 3-27
Boot, Switch, Ignition, 2-13
Bracket Assy, Coil, Ignition, 6-7
Bracket Kit, Alternator, Repair, 2-39
Bracket Wldt, Alternator [Mit13], 2-61
Bracket Wldt, Alternator, Lower [Gm1.6l], 2-39
Bracket Wldt, Brush Wrap Mtg, Rh, 2-99
Bracket Wldt, Brush Wrap, Lh, 2-99
Bracket Wldt, Cooler, Hyd Fluid, 2-151
Bracket Wldt, Flap, Recirculation, 2-101
Bracket Wldt, Guard, Sqge, 3-63
Bracket Wldt, Latch, 2-19
Bracket Wldt, Mtg, Caster, 2-107
Bracket Wldt, Mtg, Eng, 2-23
Bracket Wldt, Mtg, Eng, Back, Gas/Lpg, 2-23
Bracket Wldt, Mtg, Eng, Rear [Mit 2013], 2-49, 2-51
Bracket Wldt, Mtg, Engine [Mit 2013], 2-49, 2-51
Bracket Wldt, Mtg, Fan, Upper, 2-43, 2-45
Bracket Wldt, Mtg, Hose [M30], 2-9
Bracket Wldt, Mtg, Reg, Lpg[Gm 2010], 2-33
Bracket Wldt, Mtg, Regulator, Lpg, 2-31
Bracket Wldt, Mtg, Rh, 2-125
Bracket Wldt, Mtg, Side Brush, 3-7
Bracket Wldt, Mtg, Side Brush Fixed, 3-9
Bracket Wldt, Mtg, Sqge, 2-107
Bracket Wldt, Mtg, Tank, 2-9
Bracket Wldt, Pivot, Hppr Door, Lh, 2-93
Bracket Wldt, Pivot, Hppr, Rh, 2-93
Bracket Wldt, Propel, Pintle, 2-83
Bracket Wldt, Radiator, Fan, Gas/Lpg, 3-65
Bracket Wldt, Steering, Tilt, 2-17
Bracket Wldt, Tilt, Rh, 2-17
Bracket, Anchor, Strap, Alternator, 2-39
Bracket, Coil [Mit 2.0/2.4l], 6-19
Bracket, Cover, 2-43, 2-45, 2-93
Bracket, Cover, Hopper, 2-93
Bracket, Fan, Lh, 2-43, 2-45
Bracket, Fan, Rh, 2-43, 2-45
Bracket, Fan, Upper, Lh, 2-43, 2-45
Bracket, Filter, Oil, Remote [Mit], 6-21
Bracket, Indicator, Timing, 6-9
Bracket, Keeper, Latch, 2-117
Bracket, Latch, Cover, 2-21, 3-61
Bracket, Latch, Cover, Hppr, 2-89
Bracket, Latch, Keeper, 2-21
Bracket, Latch, Shrd, Seat, 2-15
Bracket, Lip, Hppr, 2-93
Bracket, Mtg, 2-9, 3-57, 3-59
Bracket, Mtg [FaST], 3-19
Bracket, Mtg, Alternator [Mit 2013], 2-61
Bracket, Mtg, Cable, 2-79
Bracket, Mtg, Cover, Recvy Tank, 2-125
Bracket, Mtg, Cyl, 2-83, 2-111, 2-115
Bracket, Mtg, Ecu, 2-29
Bracket, Mtg, Ecu [M20/T20 2007], 2-25, 2-27
Bracket, Mtg, Fltr, Air, 2-35, 2-37
Bracket, Mtg, Fltr, Air [Mit 2013], 2-57, 2-59
Bracket, Mtg, Fltr, Air, Ecu, 2-35, 2-37
Bracket, Mtg, Hinge, Lh, 2-21
Bracket, Mtg, Hinge, Rh, 2-15
Bracket, Mtg, Insulation, 2-9
Bracket, Mtg, Latch, 2-43
Bracket, Mtg, Lh, Tank, Recvy, 2-125
Bracket, Mtg, Mirror, Rearview, 3-45
Bracket, Mtg, Motor, 2-129, 2-133, 3-55
Bracket, Mtg, Muffler, 2-41
Bracket, Mtg, Muffler [M20/T20 2007], 2-63
Bracket, Mtg, Needle, 3-55
Bracket, Mtg, Prop Rod, 2-125
Bracket, Mtg, Radiator, 2-43, 2-45, 2-65
Bracket, Mtg, Skirt, Brush Door, 2-109, 2-113
Bracket, Mtg, Skirt, Door, 2-109, 2-113
Bracket, Mtg, Sppt, 2-75
Bracket, Mtg, Spray Handle, 3-51
Bracket, Mtg, Spray Wand [FaST, Conv], 3-51
Bracket, Mtg, Spring, 2-99
Bracket, Mtg, Sqge, 3-7
Bracket, Mtg, Strainer, 3-5
Bracket, Mtg, Switch, 2-85
Bracket, Mtg, Tank, Soltn, 2-117
Bracket, Mtg, Valve, 3-3
Bracket, Mtg, Valve, Hyd, 2-155
Bracket, Muffler, 2-63
Bracket, Propel, G/Lpg [Mit 2013], 2-83
Bracket, Propel, Gas/Lpg, 2-83
Bracket, Protector, Float Switch, 3-55
Bracket, Pulley, Tensioner, 6-9
Bracket, Pump, Mtg, 6-17
Bracket, Retain, Hose, 2-121, 2-127
Bracket, Retainer, Lh, 2-95
Bracket, Retainer, Pump, 3-19
Bracket, Retainer, Rh, 2-97
Bracket, Retainer, Safety, 2-83
Bracket, Retainer, Spring, 2-5
Bracket, Retaining, Hose, 2-121, 2-127, 3-61
Bracket, Retaining, Wire, Sparkplug, 5-12
Bracket, Screen, Oil Pump, 5-7
Bracket, Sensor, Position, Cshft, 5-7
Bracket, Shrd, Fan, Lower, Gas/Lpg, 3-65
Bracket, Shrd, Fan, Lower, Sppt, G/Lpg, 2-65
Bracket, Shrd, Fan, Upper, Sppt, G/Lpg, 2-65
Bracket, Shrd, Fan, Upper, Sppt, Gas/Lpg, 3-65
Bracket, Shrd, Radiator, Gas/Lpg, Ce, 3-65
Bracket, Skirt, Rbr, 2-43, 2-45
Bracket, Sppt, 2-95, 2-97
Bracket, Sppt, Cover, Tank, Recvy, 2-125
Bracket, Sppt, Radiator, Upper, 2-43
Bracket, Sppt, Seat, 2-15
Bracket, Sppt, Strobe Light, 3-37, 3-39, 3-41
Bracket, Sppt, Tank, Cntr, 2-117
Bracket, Sppt, Tank, Lh, 2-125
Bracket, Sppt, Tank, Rh, 2-125
Bracket, Tensioner, [Mit 2.0/2.4l], 6-17
Bracket, Tube, Coolant, 2-47
Bracket, Valve, Sba [M20 AND T20], 3-15
Bracket, Vaporizer [Mit 20/24m Tilt], 6-29
Brake Assy, Drum, Mech, 07.9d [6600]], 2-77
Brake Kit, Repair, 2-77
Brush Assy, Disk, Scb, 16.0d, Heavy Duty Polypropylene, 2-5
Brush Assy, Disk, Scb, 16.0d, Nylon, 2-5
Brush Assy, Disk, Scb, 16.0d, Super Abrasive, 2-5
Brush Assy, Disk, Scrub, 16.0 D, Heavy Duty Polypropylene (Replaced by 1220236), 2-5
Brush Assy, Disk, Scrub, 16.0 D, Super Abrasive (Replaced by 1221543), 2-5
Brush Assy, Disk, Scrub, 16.0D, Nylon (Replaced by 1220235), 2-5
Brush Assy, Disk, Sweep, 24.oD, Polypropylene (Replaced by 1220185), 2-5

Brush Assy, Disk, Swp, 24.0d, Polypropylene, 2-5
Brush Kit, Hub Assy, Drive, Ci [Hdpe In], 2-5
Brush Kit, Hub Assy, Drive, Ci [Uhmw], 2-5
Brush, Sweep / Scrub, 48L, 24 Sr, Heavy Duty Polypropylene, 2-3
Brush, Sweep / Scrub, 48L, 24 Sr, Polyester, 2-3
Brush, Sweep / Scrub, 48L, 24 Sr, Polypropylene, 2-3
Brush, Sweep / Scrub, 48L, 24 Sr,Super Abrasive, 2-3
Brush, Sweep / Scrub, 48L, Wndw, Super Abrasive, 2-3
Brush, Sweep / Scrub, 48L, Wndw, Polypropylene, 2-3
Bumper Wldt, Brush, Side, 3-7, 3-9
Bumper, Rbr, 0.5d 0.16t M5 X 08, 2-83
Bumper, Sqge, 2-105
Bumper, Ure, 1.50d 1.25l, 3-63
Bushing, 6-3, 6-5
Bushing, Eccentric, Adj, 2-121, 2-127
Bushing, Flng, 0.32b 0.50d 0.24l, Bnz, 2-107
Bushing, Flng, 0.50b 0.59d 0.38l, 2-121, 2-127
Bushing, Flng, 0.63b 0.75d 0.38l, 2-107, 2-109, 2-113
Bushing, Flng, 0.87b 1.25d 0.38l, 2-85
Bushing, Flng, 1.00b 1.13d 0.50l, 2-93, 2-103
Bushing, Knock, 6-3
Bushing, Sleeve, 0.37b 0.50d 0.50l, Oib, 2-79
Bushing, Sleeve, 0.50b 0.59d 0.50l, Bnz, 3-11
Bushing, Sleeve, 0.62b 0.72d 0.50l, Fgl, 2-107
Bushing, Sleeve, 0.63b 0.72d 0.38l, 2-111, 2-115
Bushing, Sleeve, 0.75b 0.88d 0.25l, 2-121, 2-127
Bushing, Sleeve, 0.88b 1.00d 0.75l, Bnz, 2-85
Bushing, Sleeve, 1.00b 1.13d 1.50l, Fgl, 3-11
Button, Cntrl, Horn, 2-17
Bypass Valve Kit, Pump, Repair,, 4-24

C

Cable, Battery, 02ga 48.0l Red .41ring, 2-73
Cable, Battery, 02ga 60.0l Blk .41ring, 2-73
Cable, Battery, 2ga, 60l, Red, 2-73
Cable, Battery, 2ga, 62l, Blk, 2-73
Cable, Glv .06d 012.0l .26eye /.26eye, 3-63, 3-65
Cable, Glv .09d 042.0l .38eye /.38eye, 2-19
Cable, Glv .13d 015.8l .50eye /.50eye, 2-111, 2-115
Cable, Push / Pull, 068.0l, 2-79
Cable, Push / Pull, 098.0l .25-28/.25-28, 2-81
Cam, 2-105
Cam, Centering, Pintle, 2-83
Cam, Front, 3-9
Cam, Rear, 2-105
Cam, Sensor, Wheel [Mit 2.0/2.4l], 6-25
Camshaft, 5-11
Camshaft Assy, 6-9
Cap Assy, Tank, Drain, 2-125, 4-3
Cap Screw, 4-10
Cap Screw Cl, 4-11
Cap, Arm, Lift, 2-91
Cap, Breather, Hyd w/Chain (CE Only), 2-153
Cap, Breather, Hyd, 2.4 Ds, 1-1, 2-153
Cap, End, Valve, Steering, 4-13
Cap, Filler, Oil, W/ Org, 5-3
Cap, Fuel, Tank, 2-69
Cap, Hub, Dust, 2.57d 0.77l, 2-77
Cap, Oil, Filler, 6-4
Cap, Radiator, 14psi [Stant Ao-2516], 2-43
Cap, Radiator, 14Psi [Stant], 2-65
Cap, Radiator, 16 Psi, 2-45
Cap, Rubber, 5/8id [Mit 2.0/2.4l], 6-22
Cap, Seal, 6-3
Cap, Spring, Valve, 5-3
Cap, Tank, 3-5
Cap, Vinyl, 57mmid X 23mml, 2-95, 2-97
Capacitor, Plug [4700uf, 25v], 3-36
Cartridge, Psi Cntrl, Valve, Hyd, 4-15, 4-19
Caster, Pivot, 2-107
Chain, Str, 4/0, 08 Link, 2-103
Channel Wldt, Pivot, 3-11
Channel, Inlet, 2-133
Channel, Mtg, Seal, Shrd, Lh, 2-21
Channel, Shield, Muffler [M20/T20 2007], 2-41, 2-63
Channel, Upper, Tower, Lift, 2-7
Chech Valve Kit, Pump, Repair,, 4-24
Circuitbreaker, 02.0a, Resetable, 3-27
Circuitbreaker, 2.0a, Resetable, 3-27
Clamp Wldt, Front, 2-105
Clamp Wldt, Rear, 2-105
Clamp, 0.75d [Mit], 6-25
Clamp, 1/4 Hole [Mit #20], 6-25
Clamp, 3/8id [Mit Olive Green], 6-15
Clamp, Cable, Nyl, 0.62d, Nat, 3-47
Clamp, Cable, Ss, 0.50d X 0.50w [Insul], 4-27
Clamp, Cable, Ss, 1.12d X 0.38w, 1hole, 2-123
Clamp, Cable, Ss, 2.50d X 1.00w, 1hole, 2-131
Clamp, Cable, Stl, 0.25d X 0.56w, 1hole, 3-39, 3-41
Clamp, Cable, Stl, 0.69d X 0.62w, 1h, 2-81
Clamp, Cable, Stl, 0.69d X 0.62w, 1hole, 2-31, 2-71
Clamp, Cable, Stl, 1.00d X 0.75w, 1hole, 2-59, 2-71, 2-151
Clamp, Cable, Stl, 1.25d X 1.00w, 1hole, 2-47
Clamp, Cable, Stl, 1.50d X 1.00w, 1hole, 2-7, 2-9, 2-73, 2-151, 3-55
Clamp, Cable, Stl, 2.00d X 0.75w, 1hole, 2-69
Clamp, Hose, 1.0, 2-31, 2-33
Clamp, Hose, 1.75 [Pcv], 5-3
Clamp, Hose, Spring Stl, 0.58d X 0.31w, 2-53, 2-55
Clamp, Hose, Spring Stl, 0.86d X 0.38w, 2-35, 2-37
Clamp, Hose, Spring, 0.62d, 2-31, 2-33, 6-22, 6-29
Clamp, Hose, Spring, 0.75d, 2-31, 2-33
Clamp, Hose, Wir, .52 - .56, Yel, 4-27
Clamp, Hose, Wir, .63 - .66, Blk, 4-27
Clamp, Hose, Wormdrive, 0.25-0.62d, .31w, 2-47, 2-67, 2-69, 3-3, 3-5, 3-19, 3-29
Clamp, Hose, Wormdrive, 0.31-0.88d, .31w, 2-25, 2-31, 2-57, 2-59, 2-69, 2-73, 3-13, 3-19, 3-21, 3-23, 3-29, 3-31, 3-33, 3-51
Clamp, Hose, Wormdrive, 0.56-1.06d, .56w, 2-25, 2-27, 2-31, 2-33, 2-123, 3-3, 3-5, 3-13, 3-21, 3-23, 3-31, 3-33, 3-51, 3-55
Clamp, Hose, Wormdrive, 0.81-1.50d, .50w, 3-5
Clamp, Hose, Wormdrive, 1.25-2.00d, .50w, 2-47, 2-67
Clamp, Hose, Wormdrive, 1.56-2.50d, .50w, 2-47, 2-67
Clamp, Hose, Wormdrive, 1.81-2.75d, .50w, 2-35, 2-37, 2-57, 2-59
Clamp, Hose, Wormdrive, 2.50-3.50d, .50w, 2-105, 2-121, 2-127
Clamp, Hose, Wormdrive, 3.56-4.50d, .50w, 2-121, 2-127, 2-129, 2-133
Clamp, Hose, Wormdrive, 3.75-4.62d, .62w, 2-129
Clamp, Hyd, 0.50d, 2-95, 2-97
Clamp, Mtg, Fltr, Air, 2-35, 2-37, 2-57, 2-59
Clamp, Muffler, 1.62d, 2-41
Clamp, Spring, 1.50, 2-35, 2-37
Clamp, Tension [Mit #29], 6-29
Clamp, Tube, 0.37d 0.37d, 2 Hole, 2-151
Clevis, Adj, 0.31pin, 0.31-24, 2-79
Clevis, Adj, 0.31pin, 0.31-24, Lh, 2-79
Clip, Grip, Finger, .875-1.25, 3-51
Clip, Grip, Finger, 0.88-1.25d, 3-27
Clip, Grip, Finger, 1.00-1.88d White,Vyl, 3-49, 3-53
Clip, Keeper, Open, 2-43, 2-45, 2-65
Coil, Ignition, 5-12
Coil, Ignition [Mit 2.0/2.4l], 6-19
Column, Pump, Water, 4-3
Column, Steering, 09.9L 0.86D 36Tooth, 2-17
Complete Pump Kit, Pump, Repair,, 4-24
Concept, Latch, 3-65

Connector, Fem, 02cav, Mp280 Sealed, 4-24
Connector, Fuel, E90, Qf, 2-69
Connector, Fuel, Qf, 2-69
Contact Kit, W/ Brush [En], 2-17
Control Box Assy Kit, Replmt, Telem[Can], 3-47
Control Box Assy Kit, Replmt, Telem[Usa], 3-47
Controller Kit, Replmt [Ec- H20], 4-27
Converter, Ele, 12- 36 Vdc, 3-27
Cooler, Hyd, 25gpm 325btu Of12 13x12x2, 2-151
Coupler, Pump, 4-7
Coupling, Drive, 13t, 2-23
Coupling, Flywheel [Mit20/24m], 6-18
Coupling, Nozzle, Spray, 3-51
Cover, 6-5
Cover Assy, Front, Upper [T- Belt], 6-7
Cover Assy, Rocker, 6-4
Cover Kit, Tank, Soltn, Lh, Replmt, 2-117
Cover Kit, Tank, Soltn, Lh, Replmt, (Ce & JP), 2-117
Cover Kit, Tank, Soltn, Rh, Replmt, 2-117
Cover Kit, Tank, Soltn, Rh, Replmt, (Ce & JP), 2-117
Cover Wldt, Power Supply, 3-27
Cover, Backrest, 4-29
Cover, Belt, Timing, Lower Front, 5-11
Cover, Belt, Timing, Upper Front, 5-11
Cover, Cushion, 4-29
Cover, Dust [Mit 2.0l], 6-18
Cover, End, 4-7
Cover, End, Hyd Pump, 4-9
Cover, Fuse, Block, 2-73
Cover, Hose, 2-31, 2-33
Cover, Hppr, 2-89
Cover, Hsng, Camshaft, 5-3, 5-11
Cover, Lower, Front [T- Belt], 6-7
Cover, Lower, Lh, 2-21
Cover, Lower, Rh, 2-15
Cover, Pump, Oil, 5-7
Cover, Rear [T- Belt], 6-7
Cover, Tank, 2-125
Cover, Tank, Recvy, 2-125
Cover, Timing, Gear [Mit 2.0/2.4l], 6-9
Cover, Trimmed, 3-27
Crank Kit, Pump, F/79323, Replmt, 4-23
Crankshaft, 5-5
Crankshaft Assy, 6-10
Crossmember Wldt, 2-107
Cup Holder, Rwk, 2-13
Cylinder Assy, Head, Bolt, 6-5
Cylinder, Hyd, 1.5B 07.8L 02.75Strk 2500, 2-93
Cylinder, Hyd, 1.5b 07.8l 02.75strk 2500, 3-11
Cylinder, Hyd, 1.5b 07.8l 02.80strk 2500, 2-99, 2-103, 2-111, 2-115, 3-11
Cylinder, Hyd, 2.0B 24.1L 15.00Strk 3000, 2-85
Cylinder, Hyd, 2.0b,15.2l,09.00strk,3000, 2-75

D

Detergent, Pkg, 2 Liter, Sgl [665], 3-19
Detergent, Pkg, 2 Liter, Sgl [965, Tco], 3-19
Diaphragm Kit, Pump, Repair,, 4-24
Diode, Ele, Plug, 2-73
Dipstick Assy, Guage, 6-3
Dipstick, Guage, Guide, 6-3
Dipstick, Oil, 5-8
Dipstick, Rod, Guage, 6-3
Door Wldt, Brush, 2-95, 2-97
Door Wldt, Brush, Idler, 2-95, 2-97
Door Wldt, Brush, Lh, 2-115
Door Wldt, Brush, Rh, 2-111
Door Wldt, Hppr [M30], 2-93
Drain, Water, Joint, 6-3
Drive, 4-10
Drive [Cl], 4-11
Drive, Motor, Hyd, 4-5
Duct, Vacfan, Casting, 2-133

E

ec- H2O Kit, Flush, Replmt[M20, M30&T20], 3-29
Elbow, 6-21
Elbow, 1/8m X 1/8f, 90 [Mit], 6-15
Electrode, 5 Plate, High Flow, 4-27
Electrode, Cylindrical, 4-27
Element, Fltr, Air [Dn], 1-1, 2-35, 2-37, 2-57, 2-59
Element, Fltr, Air, Safety (OPTION), 2-35, 2-37, 2-57, 2-59
Element, Fltr, Oil, Eng, Spin- On, 2-23, 5-8
Element, Fltr, Oil, Eng, Spin- On (GM), 1-1
Element, Fltr, Oil, Spin- On (Mits), 1-1, 2-49, 2-51
End Cap, 4-10
End Cap, Motor, Hyd [En], 4-11
Engine, Block, Long [Gm1.6l] (See Engine Breakdown), 2-23
Engine, Block, Long [Mits 12mm] (See Engine Breakdown), 2-49, 2-51
Engine, Gas [Mitsubishi] (See Engine Breakdown), 2-49
Engine, LPG [Mitsubishi] (See Engine Breakdown), 2-51
Extinguisher Kit, Fire, Ci [M20/T20/M30], 3-66
Extinguisher, Fire, 2.5 Lb Dry, 3-66

F

Fan Kit, Scrub, Replmt [M20&T20], 2-129
Fan, Cooling, 14.1d, 6 Blade, 0.5b Taper, 2-61, 3-65
Fan, Cooling, 16.0d, 6 Blade, 2-39
FaST Kit, Ci [inj Rebld, M30/M20 III], 4-30
FaST Kit, Ci, Injector Filters[FaST Ii+], 4-30
FaST Kit, Injector [M20/T20/M30 FaST III] (See Breakdown), 3-19
FaST Kit, Injector [M20/T20/m30 FaST III}, 4-30
FaST Kit, Seal, injector, Ci [FaST III], 4-30
Filter Assy, Air, 2-35, 2-37, 2-57, 2-59
Filter Assy, Hyd, 10mic, 1-1, 2-153
Filter Kit, Fuelock, Lpg, 1-1, 2-31, 2-33, 6-29
Filter, Fuel [Gm 1.6l/3.0l], 1-1, 2-69
Filter, In- Line, Pf06/Pf06 080mesh 02.6l, 3-19, 3-29
Filter, Oil (Mits), 6-21
Filter, Panl, Syn, 4.2 X 20.0 X 30.0, 1-1, 2-89
Filter, Soltn, 020mesh, Pm12 3.2d 08.0l, 3-5
Filter, Soltn, 20mesh, Pm12 3.1d 02.6l, 1-1, 2-117, 3-55
Filter, Y, Inline, .75, 3-55
Fitting Assy, Qdc, Pf04, 3-29
Fitting Kit [Epr], 2-31, 2-33
Fitting Kit, Hose, Garden, 3-3
Fitting, 1/2 Mpt X 5/8bh 90deg [Mit], 6-23
Fitting, 1/2 X 5/8 Hose,Plastic[Mit], 6-29
Fitting, 1/4mpt X 1/4mpt, 90deg[Mit], 6-29
Fitting, 1/8 Mpt X 3/8 Hb [Mit], 6-15
Fitting, 37deg [Mit], 6-7
Fitting, Adapter, Orifice, Pf06/Pm06, 2-25, 2-27, 2-33
Fitting, Barb, 3/4" [Epr], 6-30
Fitting, Brs, Breather [02mp], 2-91
Fitting, Brs, E45, Pf02/Pm02, 2-23
Fitting, Brs, E90, Bm03/Pm02, 2-91, 2-125, 3-5
Fitting, Brs, E90, Bm06/Pm04, 2-55
Fitting, Brs, E90, Bm12/Pm12, 3-55
Fitting, Brs, E90, Em05/Pm04, 2-69
Fitting, Brs, E90, Em10/Pm06, 2-25, 2-27, 2-31, 2-33
Fitting, Brs, E90, Em12/Pm08, 3-55
Fitting, Brs, E90, Pf04/Pm04, 2-31, 2-71
Fitting, Brs, E90, Pf08/Pm06, 3-55
Fitting, Brs, Qdc, Bm12/Qf08, 3-3
Fitting, Brs, Qdc, Pf04, Lpg Fem, 2-71
Fitting, Brs, Qdc, Pf08 [Parker Bh3f], 3-3
Fitting, Brs, Snubber, Pm02/Pf02, 3-29
Fitting, Brs, Spcl [Garden Hose], 3-51
Fitting, Brs, Str, Bm03/Pm02, 2-91
Fitting, Brs, Str, Bm06/Pm02, 2-53
Fitting, Brs, Str, Bm06/Pm05, 2-25, 2-31
Fitting, Brs, Str, Bm06/Pm06, 2-53, 2-55
Fitting, Brs, Str, Bm12/Pm08, 3-55
Fitting, Brs, Str, Bm12/Pm12, 3-55
Fitting, Brs, Str, Em10/Pm06, 2-27, 2-33
Fitting, Brs, Str, Pf02/Pm02 [Bspt], 2-53
Fitting, Brs, Str, Pf02/Pm06, 3-29
Fitting, Brs, Str, Pf04/Pf04, Bh, 2-71
Fitting, Brs, Str, Pf04/Pm02, 2-25, 2-31
Fitting, Brs, Str, Pf06/Pf06 Bh, 3-51
Fitting, Brs, Str, Pf06/Pm04, 2-27, 2-33, 2-53, 2-55, 3-53
Fitting, Brs, Str, Pf06/Pm12, 3-51
Fitting, Brs, Str, Pm02, Service (CE ONLY), 2-35, 2-37, 2-57, 2-59

Fitting, Brs, Str, Pm04/Pm06 [Hp], 3-53, 3-55
Fitting, Brs, Str, Pm06/Pm08 [Hp], 3-55
Fitting, Brs, Str, Pm08/Garden Hose, 3-51
Fitting, Brs, Tee, Pf04/Pf04/Pm04, Run, 2-71
Fitting, Brs, Tee, Pm04/Pf04/Pf04, Run, 3-19
Fitting, Draincock, E90, .25npt, 2-47, 2-67
Fitting, E, Gr, 4-3
Fitting, E90, 2-29, 6-22
Fitting, Fltr, Oil, 5-8
Fitting, Fuel [Mixer E100Lp 2010], 2-29
Fitting, Fuel, Str, 0.38-24 [07 Eng], 2-69
Fitting, Fuel, Str, 0.56-18 [07 Eng], 2-69
Fitting, Grease, Str Pm04 .47l, 2-85, 2-93, 2-99, 2-107
Fitting, Grease, Str Pm04 .63l, 2-75
Fitting, Hyd, Cap, Jf08, 2-151, 3-15
Fitting, Hyd, E45, Jf08/Jm08, 2-145
Fitting, Hyd, E45, Jf10/Jm10, 2-139
Fitting, Hyd, E45, Jm04/Om04, 3-15
Fitting, Hyd, E45, Jm04/Om06, 2-75
Fitting, Hyd, E45, Jm06/Om04, 2-129
Fitting, Hyd, E45, Jm06/Om06, 2-75, 3-17
Fitting, Hyd, E45, Jm08/Om08, 2-129, 2-153, 2-155, 3-15
Fitting, Hyd, E45, Jm08/Om10, 2-131, 2-149
Fitting, Hyd, E45, Jm10/Om12, 2-75
Fitting, Hyd, E45, Jm12/Om16, 2-153
Fitting, Hyd, E45, Jm20/Om20, 2-153
Fitting, Hyd, E90, Jf04/Jm04, 2-97, 2-155, 3-15
Fitting, Hyd, E90, Jf06/Jm06, 3-15
Fitting, Hyd, E90, Jf08/Jm08, 2-17, 2-151
Fitting, Hyd, E90, Jm04/Om04, 2-85, 2-93, 2-103, 2-111, 2-115, 2-155, 3-11
Fitting, Hyd, E90, Jm04/Om06, 3-57, 3-59
Fitting, Hyd, E90, Jm04/Pm02, 2-153
Fitting, Hyd, E90, Jm06/Om04, 2-99, 2-131, 2-133, 3-11
Fitting, Hyd, E90, Jm06/Om06, 2-17, 2-155
Fitting, Hyd, E90, Jm06/Om06, Long, 2-155
Fitting, Hyd, E90, Jm06/Om08, 2-149
Fitting, Hyd, E90, Jm08/Om08, 2-95, 2-97, 2-133, 2-149, 3-15
Fitting, Hyd, E90, Jm08/Om08, Long, 2-155
Fitting, Hyd, E90, Jm08/Om10, 3-7, 3-9
Fitting, Hyd, E90, Jm10/Om12, 2-149
Fitting, Hyd, E90, Jm12/Om12, 2-151
Fitting, Hyd, E90, Jm12/Om12, Long, 2-151
Fitting, Hyd, E90, Om04/Qm04, 2-155, 3-15
Fitting, Hyd, E90, Spcl, 2-31, 2-33
Fitting, Hyd, Plug, Om04, 2-155, 4-15, 4-17
Fitting, Hyd, Plug, Om06, 2-153, 2-155
Fitting, Hyd, Plug, Om08, 4-7
Fitting, Hyd, Plug, Om10, 2-153
Fitting, Hyd, Plug, Pm06, 2-27, 2-33
Fitting, Hyd, Rst, Jf04/Jm04, .028, 2-85
Fitting, Hyd, Rst, Spcl, 2-111, 2-115
Fitting, Hyd, Str, Jf04/Qm04, 3-15
Fitting, Hyd, Str, Jf06/Jm04, 2-151
Fitting, Hyd, Str, Jm04/Om04, 2-95, 2-97, 2-155, 3-15
Fitting, Hyd, Str, Jm04/Om06, 3-15, 3-57, 3-59
Fitting, Hyd, Str, Jm06/Om04, 2-133
Fitting, Hyd, Str, Jm06/Om06, 2-17, 2-153, 3-15, 3-17
Fitting, Hyd, Str, Jm06/Om06, Long, 2-17, 2-155
Fitting, Hyd, Str, Jm08/Om06, 2-17
Fitting, Hyd, Str, Jm08/Om08, 2-133, 2-149, 3-15
Fitting, Hyd, Str, Jm08/Om10, 2-131
Fitting, Hyd, Str, Jm08/Om12, 3-57, 3-59
Fitting, Hyd, Str, Jm10/Om10, Long, 2-155
Fitting, Hyd, Str, Jm10/Om12, 2-75
Fitting, Hyd, Str, Jm20/Om16, 2-149
Fitting, Hyd, Str, Om04/Pf04, 2-155
Fitting, Hyd, Str, Om04/Qm04, 3-15
Fitting, Hyd, Str, Pf02/Pm04, 2-71
Fitting, Hyd, Tee, Jf06/Jm06/Jm06, Run, 2-133
Fitting, Hyd, Tee, Jf08/Jm08/Jm08, Br, 2-131
Fitting, Hyd, Tee, Jm04/Jm04/Om04, Run, 2-155
Fitting, Hyd, Tee, Jm08/Jm08/Om08, Br, 2-129, 2-155
Fitting, Hyd, Tee, Jm08/Jm08/Om08, Run, 3-57, 3-59
Fitting, Nipple, .25mal, 2-31, 2-33
Fitting, Nyl, Qdc, E90, Bm06/ Qm10, 3-19
Fitting, Nyl, Qdc, E90, Bm08/ Qm10, 3-19, 3-29
Fitting, Pipe, Bshg, M18 X 1.5, 2-23
Fitting, Pipe, E45, Spcl, 2-71
Fitting, Pipe, E90, Pf02/Pm02 (CE ONLY), 2-35, 2-37, 2-57, 2-59
Fitting, Pipe, Plug, Metric, M18,Soc, 2-41
Fitting, Pipe, Plug, Pm02, Sq Head, 2-69
Fitting, Pipe, Str, Pm04/Sf04, 2-71
Fitting, Plstc, E90, Bm05/Bm05, Nyl, 3-29
Fitting, Plstc, E90, Bm06/Bm06, 3-5, 4-27
Fitting, Plstc, E90, Bm06/Pm04, Nyl, 3-19
Fitting, Plstc, E90, Bm06/Pm12, Nyl, 3-3
Fitting, Plstc, E90, Bm08/Bm08, 3-29
Fitting, Plstc, E90, Bm08/Pf08s, Swivel, 3-51
Fitting, Plstc, E90, Bm08/Pm04, 3-29
Fitting, Plstc, E90, Bm08/Pm06, 3-29, 3-51
Fitting, Plstc, E90, Bm10/Pm12, 3-19, 3-29
Fitting, Plstc, E90, Bm12/Pf12, 3-5
Fitting, Plstc, E90, Bm12/Pm08, 3-3
Fitting, Plstc, E90, Bm12/Pm12, 3-3, 3-5, 3-19, 3-29
Fitting, Plstc, E90, Pf Bm [Es Pump], 4-3
Fitting, Plstc, E90, Pf12/Pm12, 2-117, 3-3
Fitting, Plstc, Pf12/Pf12, Bh, 2-117, 3-55
Fitting, Plstc, Pipe, Cap, Pf04, 3-19, 4-27
Fitting, Plstc, Str, Bm04, Cplg, Fem, 3-19
Fitting, Plstc, Str, Bm04/Bm08, 3-29
Fitting, Plstc, Str, Bm04/Pm04, 3-29
Fitting, Plstc, Str, Bm05/Pm04, 3-29
Fitting, Plstc, Str, Bm06/Bm08, 3-33
Fitting, Plstc, Str, Bm06/Pm04, 3-19, 4-27
Fitting, Plstc, Str, Bm06/Pm06, 3-19
Fitting, Plstc, Str, Bm08/Pf08s, Swivel, 3-51
Fitting, Plstc, Str, Bm08/Pm12, 3-19, 3-29
Fitting, Plstc, Str, Bm10/Bm10, 2-123
Fitting, Plstc, Str, Bm10/Pm12, 2-123, 3-3
Fitting, Plstc, Str, Bm12/Pm08, Nyl, 3-3, 4-3
Fitting, Plstc, Str, Bm12/Pm12, 2-123, 3-3
Fitting, Plstc, Str, Pf06/Qm10, Pvc, 3-29
Fitting, Plstc, Str, Pm02/Bm05, 4-27
Fitting, Plstc, Str, Pm04, Cplg, Mal, 3-19
Fitting, Plstc, Str, Pm04/Pm06, Nyl, 3-29
Fitting, Plstc, Str, Pm08/Pm08, 3-3
Fitting, Plstc, Str, Pm12/Pm12 1.60l, 3-3, 3-19, 3-29
Fitting, Plstc, Tee, Bm03/Bm03/Bm03, 3-5
Fitting, Plstc, Tee, Bm04/Bm04/Bm04, 3-19
Fitting, Plstc, Tee, Bm06/Pm02/Bm06, 4-27
Fitting, Plstc, Tee, Bm08/Bm10/Bm10, Br, 3-21, 3-31, 3-33, 3-51
Fitting, Plstc, Tee, Bm08/Bm12/Bm12, Br, 3-21, 3-31, 3-33, 3-51
Fitting, Plstc, Tee, Bm10/Bm10/Bm10, 2-27, 2-33, 3-13
Fitting, Plstc, Tee, Bm12/Bm12/Bm12, 3-13
Fitting, Plstc, Tee, Pf08/Pf08/Pf08, 3-3
Fitting, Plstc, Tee, Pf12/Pf12/Pf12, 3-3, 3-19, 3-29
Fitting, Plstc, Y, Bm08/Bm08/Bm08, Nyl, 3-19, 3-23, 3-33
Fitting, Plug, 2-23
Fitting, Plug, M16, Intake Manifold, 2-25, 2-27, 2-29
Fitting, Plug, Org, #6, Valve [Cec], 4-15, 4-17, 4-19, 4-21
Fitting, Ss, Qdc, Fem, 3-53
Fitting, Ss, Qdc, Mal, 3-53, 3-55
Fitting, Str, 10-10 Orb, 37fi [Mit], 6-21
Fitting, Vacuum [M16-15-6h], 2-25, 2-27, 2-29
Flange Kit, 4-9
Flange Mounting, 4-10
Flange, Motor, Hyd [En], 4-11
Flange, Sprocket, Cshft, 6-11
Flap, Battery, 2-13
Flapper, Valve, Pump, Water, 4-3
Flywheel, 5-5
Flywheel, Flatface [Mit 20/24m], 6-18
Frame Wldt, Main, Replmt [M30], 2-7
Frame Wldt, Screen, Rad, 3-65
Frame Wldt, Sqge, Lh, 2-113
Frame Wldt, Sqge, Rh, 2-109

Frame Wldt, Sqge, Side Brush, 3-7
Front Tabbed Skirt, 1-1
Fuelline, .31d Str/Str, Plstc, 2-69
Fuelline, .31d Str/Str, Plstc [Mit 2013], 2-69
Fuelline, .31d Str/Str,Plstc, 2-69
Fuse, 05a [Min-5], 2-205
Fuse, 10a, 2-205
Fuse, 15a [Min-15], 2-205
Fuse, 20a [Min-20], 2-205
Fuse, 60a, 2-205
Fuse, Blade, 15a, 32vdc, 2-73

G

Gasket, 6-5
Gasket Kit, Repair, Gas [Gm1.6l 2007], 2-25, 2-27
Gasket Kit, Repair, Lpg [Gm1.6l 2007], 2-29
Gasket, .13, 07.68w 09.45l, Adh [Poron], 2-73
Gasket, .19, 4.05id 5.29od [Buna], 2-125
Gasket, .25 1.88d 1.0id [Poron], 4-3
Gasket, 1.50, 03.75w, 03.75l, Adh, 2-131
Gasket, 2.00, 10.00w, 13.00l, Adh, 2-131
Gasket, 4.05id 5.29od .19 [Buna], 4-3
Gasket, Body, Throttle [1.6l], 2-25, 2-27
Gasket, Case, Front, 6-12
Gasket, Cover, Hsng, Camshaft, 5-3
Gasket, Cover, Recvy Tank, 2-125
Gasket, Cover, Rocker, 6-4
Gasket, Cylinder, Head, 6-5
Gasket, Door, Dump, 2-93
Gasket, Exhaust, .07, 1.63id, 2/3.4bc, 2-41
Gasket, Exhaust, 2hole, 3.4bc, 2-63
Gasket, Flng, Pipe, Exhaust, 2-41
Gasket, Foam, .50, 14.76id 16.54od, Adh, 2-131
Gasket, Head, Cyl, 5-3
Gasket, Manifold, Exh [Mit], 6-16
Gasket, Manifold, Exhaust, 5-9, 6-16
Gasket, Manifold, Intake, 2-25, 2-27, 5-9, 6-15
Gasket, Neo, 1.25, 04.45w 06.42l, Adh, 2-133
Gasket, Oil, Adapter [Mit 2.0/2.4], 6-21
Gasket, Oil, Filler, Cap, 6-4
Gasket, Pan, Oil, 5-8
Gasket, Plt, Hose, Vacuum, 2-129
Gasket, Plug, Drain, Oil, 6-7
Gasket, Plug, Relief Valve,Oil Press, 2-23, 5-7
Gasket, Pump, Oil, 5-7
Gasket, Pump, Water, 6-13
Gasket, Screen, 6-7
Gasket, Sender, Fuel, 2-69
Gasket, Sqge, 2-105
Gasket, Throttle [Mit 40mm], 6-27, 6-28
Gasket, Tube [Pcv], 5-3
Gasket, Ure, .16, 3.23id 3.63od, 2-125
Gasket, Water [Mit 2.0/2.4l], 6-22
Gasket, Water Supply [Mit 2.0/2.4l], 6-23
Gasspring, 180lb, 03.0strk, 2-15
Gauge, Sensing, Level, 2-153
Gear, Drive, Oil Pump, 5-7
Gear, Ring, Drive, Oil Pump, 5-7
Gear, Ring, Starter, 5-5
Geroler, Motor, Hyd, 4-5
Gerotor Set, 4-10
Gerotor Set [Cl], 4-11
Grill Wldt, Front, 2-19
Grill, Lh, 2-15, 2-21
Grip, Handle, 2-121, 2-127
Grommet, Blind, 4-27
Grommet, Pye, 0.37id, F/1.5h, .13 Matl, 3-5
Grommet, Rbr, 0.38id, F/0.5h, .12 Matl, 3-47
Grommet, Rbr, 0.50id, F/0.8h, .12 Matl, 3-42, 3-43
Grommet, Rbr, 0.62id, F/0.9h, .06 Matl, 2-91, 3-27
Grommet, Rbr, 0.75id, F/1.3h, .12 Matl (CE ONLY), 2-15
Grommet, Rbr, 1.50id, F/1.8h, .19 Matl, 2-91
Guard Kit, Sqge, Ci [M30], 3-63
Guard Wldt, Brush, Side, 3-13
Guard Wldt, Sqge, 3-63
Guard Wldt, Sqge, Pntd [M30], 3-63
Guard Wldt, Top, Ohg, 3-45
Guard, Fan, Lpg, Ce (CE Only), 2-43, 2-45
Guard, Fan, Side, 2-61

H

Handle Wldt, Drain, 2-125
Handle, Gun, Trigger, 3-53
Handle, Valve, Pinch, Lh, 2-127
Handle, Valve, Pinch, Rh, 2-121
Hanger, Engine, 6-15
Harness, Extn, Telem [M30], 3-47
Harness, Headlight, 2-199
Harness, Hppr [M20/M30], 2-201
Harness, Hppr, Cover [M20], 2-203
Harness, Jumper [Deutsch To Mpack], 4-17, 4-21
Harness, Main [M30], 2-198
Harness, Press Wash [M30], 3-53
Harness, Spray, Nozzle, 3-51
Harness, Temp, Eng, Switch [M30], 2-23
Harness, Warning / Backup [M20 & T20], 3-37, 3-39, 3-41
Harness, Warning / Ohg [M20], 3-42, 3-43
Harness, Wire [Ec-H2o, Mako, 2.0l & Dsl], 3-36
Harness, Wire [Ec-H2o], 3-36
Harness, Wire [FaST Gen 2], 3-25
Harness, Wire, Eng, Gas [Mit, 2.0L], 2-205
Harness, Wire, Eng, Gas [GM 1.6L 10], 2-205
Harness, Wire, Eng, Gas [Gm 1.6l], 2-205
Harness, Wire, Eng, Gas [Mit, 2.0l], 6-25
Harness, Wire, Eng, Lpg [Mit, 2.0L], 2-205
Harness, Wire, Eng, Lpg [GM 1.6L 10], 2-205
Harness, Wire, Eng, Lpg [Gm 1.6l], 2-205
Harness, Wire, Eng, Lpg [Mit, 2.Ol], 6-25
Head Assy, Cylinder, 6-5
Head, Cyl, 5-3
Headlight, 12vdc, 27watt, 2.1a, Oval (Rpl by 1060942), 2-7
Headlight, 12Vdc, Oval, Halogen, 2-7
Hinge Wldt, Lh, Pin, 2-21
Hinge Wldt, Lh, Tube, 2-21
Hinge Wldt, Shrd, Rh, 2-15
Hinge, .38pin .12 3.5w 06.5l, 6/0.38sl, 2-19
Hinge, .50pin .19 4.0w 06.0l 3/0.44sl, 2-111, 2-115
Hopper Wldt, Lift [M30], 2-91
Hopper, Debris [M30], 2-87
Horn, 12vdc, Dba [Wolo], 2-73
Hose [Epr To Manifold], 2-31, 2-33
Hose [Mixer To Epr], 2-31
Hose [Pcv], 5-3
Hose Assy, Sqge, 2-125
Hose Assy, Upper, Tap [Mit], 6-29
Hose Assy, W/1cuff, 1.0d 009l 1.0/, 2-87
Hose Assy, W/2cuff, 1.5d 084l [Vacwand], 3-49
Hose Kit, Coolant, Replmt [Mitsubishi}, 2-67
Hose, 90x90,Filter, Oil, Remote[Mit], 6-21
Hose, 90xstr,Flter, Oil, Remote[Mit], 6-21
Hose, Afmkt, Coolant Recvy, 05ft, 2-47, 2-67
Hose, Afmkt, Pvc, Brd 0.62id 01ft, 3-5
Hose, Afmkt, PVC, Brd, 0.31Id, 03Ft, Clr, 3-29, 4-27
Hose, Afmkt, Pvc, Brd, 0.38id, 01ft, Clr, 4-27
Hose, Afmkt, Pvc, Brd, 0.38id, 02ft, Clr, 3-33, 4-27
Hose, Afmkt, Pvc, Brd, 0.38id, 03ft, Clr, 3-5, 3-19
Hose, Afmkt, Pvc, Brd, 0.50id, 01ft, Clr, 3-29
Hose, Afmkt, Pvc, Brd, 0.50Id, 08Ft, Clr, 3-19, 3-21, 3-23, 3-29, 3-33, 3-51
Hose, Afmkt, Pvc, Brd, 0.50id, 12ft, Clr, 3-31
Hose, Afmkt, Pvc, Brd, 0.62id, 01ft, Clr, 2-123
Hose, Afmkt, Pvc, Brd, 0.62id, 03ft, Clr, 3-33
Hose, Afmkt, Pvc, Brd, 0.62id, 08ft, Clr, 2-123, 3-13, 3-21, 3-31
Hose, Afmkt, Pvc, Brd, 0.75id, 01ft, Clr, 3-5
Hose, Afmkt, Pvc, Brd, 0.75id, 03ft, Clr, 3-3
Hose, Afmkt, Pvc, Brd, 0.75id, 08ft, Clr, 2-123, 3-3, 3-13, 3-21, 3-31
Hose, Afmkt, Pvc, Clr, 0.25id, 03ft, 3-19, 3-29
Hose, Afmkt, Pvc, Clr, 0.38id, 01ft, 3-19

Hose, Afmkt, Pvc, Clr, 0.38id, 03ft, 3-3, 3-19
Hose, Afmkt, Pvc, Clr, 0.38id, 08ft, 3-5
Hose, Afmkt, Pvc, Clr, 0.50id, 08ft, 3-23
Hose, Afmkt, Pvc, Wir, 0.50id, 03ft, Clr, 3-19
Hose, Afmkt, Pvc, Wir, 0.75id, 02ft, Clr, 3-55
Hose, Afmkt, Pvc, Wir, 0.75id, 08ft, Clr, 3-55
Hose, Afmkt, Rbr, Heater, 0.38id, 03ft, 2-53, 2-55
Hose, Afmkt, Rbr, Heater, 0.62id, 02ft, 2-27, 2-33
Hose, Afmkt, Vacuum, 0.16id, 01ft, 2-125, 3-5
Hose, Afmkt, Vacuum, 0.16id, 03ft, 2-91
Hose, Coolant, Mold, 1.25id To 1.62id, 2-47, 2-67
Hose, Coolant, Molded [Mit 20/24m], 6-29
Hose, Drain, 3.00id X 48.0l, 2-121, 2-127
Hose, Drain, Engine Oil, 2-23
Hose, Drain, Oil [Mit 20/24m], 6-7
Hose, Drain,Overflow,Radiator[1pick=1ft], 2-57, 2-59
Hose, Flex, 4.00d, 24.0l, 2-129
Hose, Flex, Vacuum, 03.5d, 040.0l, 2-133
Hose, Fuel [Mixer To Epr, 22.5”L], 2-33
Hose, Fuel, 0.31id [Evap Emission 07], 2-69
Hose, Fuel, .38d, Rbr[16”L], 6-15
Hose, Fuel, 0.18id, 29.0l, 2-47, 2-67
Hose, Fuel, 0.50id, 21.0l, 2-69
Hose, Fuel, Molded [Mit 20/24m], 6-29
Hose, Heater, 2-25
Hose, Heater, 0.38id, 2-25, 2-31
Hose, Heater, 0.62id, 024.0l, 2-27
Hose, Heater, 0.62id, 038.0l, 2-33
Hose, Heater, E90, 0.62id, 24.0 4.0, 3-23, 3-33
Hose, Hyd, Med04, Jf04e90/Jf04str, 016.0, 2-145
Hose, Hyd, Med04, Jf04e90/Jf04str, 022.0, 3-57, 3-59
Hose, Hyd, Med06, Jf06e90l/Jf06str,038.0, 3-17
Hose, Hyd, Med06, Jf06str/Jf06str, 022.0, 2-141, 2-143
Hose, Hyd, Med06, Jf06str/Jf06str, 042.0, 2-141, 2-143
Hose, Hyd, Med08, Jf08e45/Jf08str, 029.0, 2-145
Hose, Hyd, Med08, Jf08str/Jf08str, 025.0, 2-141, 2-143
Hose, Hyd, Med10, Jf10Str/Jf10Str, 041.0, 2-141, 2-143
Hose, Hyd, Med12, Jf12E90/Jf12Str, 029.0, 2-141, 2-143
Hose, Hyd, Med12, Jf12e90/Jf12str, 048.0, 2-141
Hose, Hyd, Med12, Jf12e90/Jf12str, 056.0, 2-141
Hose, Hyd, Med12, Jf12Str/Jf12Str, 066.0, 2-141, 2-143
Hose, Hyd, Spcl, Jf04str/Jf04str, 133.0, 2-147
Hose, Hyd, Spcl, Jf04str/Jf04str, 140.0, 2-145
Hose, Hyd, Spcl, Jf04str/Jf04str, 144.0, 2-145
Hose, Hyd, Spcl, Jf04str/Jf06str, 136.0, 2-147
Hose, Hyd, Spcl, Jf10e90/Jf10str, 063.0, 2-139
Hose, Hyd, Spcl, Jf10str/Jf10str, 56.5, 2-139
Hose, Hyd, Suc20, Jf20str/Jf20e90, 032.0, 2-141, 2-143
Hose, Hyd, Tc04, Jf04e45/Qm06, 024.0, 2-147
Hose, Hyd, Tc04, Jf04e90/Jf04str, 020.0, 2-145
Hose, Hyd, Tc04, Jf04str/Jf04e45, 035.0, 2-147
Hose, Hyd, Tc04, Jf04str/Jf04str, 025.0, 3-17
Hose, Hyd, Tc04, Jf04str/Jf04str, 039.0, 3-17
Hose, Hyd, Tc04, Jf04str/Jf04str, 044.0, 3-17
Hose, Hyd, Tc04, Jf04str/Jf04str, 58.0, 2-145
Hose, Hyd, Tc04, Jf04str/Jf04str, 96.0, 2-145
Hose, Hyd, Tc04, Jf04Str/Qm06, 028.0, 2-147
Hose, Hyd, Tc06, Jf06e90/Jf06str, 040.0, 2-139
Hose, Hyd, Tc06, Jf06e90/Jf06str, 104.0, 2-139
Hose, Hyd, Tc06, Jf06str/Jf06e45, 056.0, 2-145
Hose, Hyd, Tc06, Jf06str/Jf06str, 028.0, 3-17
Hose, Hyd, Tc06, Jf06str/Jf06str, 054.0, 2-145
Hose, Hyd, Tc06, Jf06str/Jf06str, 062.0, 3-17
Hose, Hyd, Tc06, Jf06str/Jf06str, 086.0, 3-17
Hose, Hyd, Tc08, Jf08e45/Jf08str, 018.0, 2-145
Hose, Hyd, Tc08, Jf08E45/Jf08Str, 026.0, 2-141, 2-143
Hose, Hyd, Tc08, Jf08e45/Jf08str, 096.0, 2-139
Hose, Hyd, Tc08, Jf08E45/JF08Str, 18.0, 3-55
Hose, Hyd, Tc08, Jf08e90/Jf08str, 013.0, 2-145
Hose, Hyd, Tc08, Jf08e90/Jf08str, 024.0, 3-57
Hose, Hyd, Tc08, Jf08e90/Jf08str, 029.0, 2-141, 2-143, 3-57
Hose, Hyd, Tc08, Jf08e90/Jf08str, 042.0, 3-59
Hose, Hyd, Tc08, Jf08e90/Jf08str, 046.0, 2-141, 2-143, 3-57
Hose, Hyd, Tc08, Jf08e90/Jf08str, 054.0, 3-59
Hose, Hyd, Tc08, Jf08str/Jf08e90, 012.0, 3-15
Hose, Hyd, Tc08, Jf08Str/Jf08Str, 021.0, 2-141, 2-143
Hose, Hyd, Tc08, Jf08str/Jf08str, 027.0, 3-57
Hose, Hyd, Tc08, Jf08str/Jf08str, 031.0, 2-141, 2-143
Hose, Hyd, Tc08, Jf08str/Jf08str, 039.0, 3-17, 3-57, 3-59
Hose, Hyd, Tc08, Jf08str/Jf08str, 048.0, 2-145
Hose, Hyd, Tc08, Jf08str/Jf08str, 052.0, 3-59
Hose, Hyd, Tc08, Jf08str/Jf08str, 060.0, 3-17
Hose, Hyd, Tc08, Jf08str/Jf08str, 072.0, 3-59
Hose, Hyd, Tc08, Jf08str/Jf08str, 084.0, 3-17
Hose, Hyd,Med04, Jf04str/Jf04str, 066.0, 2-139
Hose, Intake, Mold [Epdm Mit 2013], 2-57, 2-59
Hose, Intake, Mold, 2.00id [Epdm], 2-35, 2-37, 2-57, 2-59
Hose, Intake, Mold, 2.0id [Epdm], 2-35, 2-37
Hose, Intake, Mold, 2.0id, Gas, 2-35
Hose, Intake, Mold, 2.0id, Lpg, 2-37
Hose, Intake, Mold, 2.0id, Lpg [Gm 2010], 2-37
Hose, Intake, Mold, Gas [Epdm Mit 2013], 2-57
Hose, Intake, Mold, Lpg [Epdm Mit2013], 2-59
Hose, Lpg, Med05, Pm04str/Sm04str, 014.0, 2-71
Hose, Lpg, Med05, Pm04str/Sm04str, 055.0, 2-71
Hose, Mold, .62 To .75 (Cut in 2), 2-31
Hose, Pvc, Clr, 0.38id 0.56od 022.0l, 2-47, 2-67
Hose, Pvc, Clr, 0.50id 0.69od 026.0l, 3-13
Hose, Pvc, Clr, 0.50id 0.69od 030.0l, 2-73
Hose, Radiator, Lower, Mold, 2-47
Hose, Radiator, Mold, .75Id X .62Id (Cut in two), 2-27
Hose, Rbr, 25ft, 3-53
Hose, Rbr, E90, 1.25id 1.25id 04.2 03.1, 2-47, 2-67
Hose, Supply, Gas, .25id, 2-31, 2-33
Hose, Vacuum, 0.22id X 15.0l, 2-25, 2-27, 2-29
Hose, Vacuum, 3.00id X 019.0l, 1cuff, 2-105

Hose, Vent, E90, 0.62id[Gm1.6l 2007], 2-35, 2-37
Hose, Water, Coil, 0.38id 0.56od, 3-51
Housing, 4-7
Housing Assy, Vacfan, Scrbr, 2-129
Housing Assy, Vacfan, Swpr, 2-133
Housing Kit, Drive, Front, Replmt, 2-75
Housing Kit, Pump, Water, 4-3
Housing Wldt, Brush, Drive, 2-95, 2-97
Housing Wldt, Swp, Scb, 2-99
Housing Wldt, Vacfan, Front [528], 2-129
Housing, Bottom, 4-27
Housing, Brg, Motor, Hyd, 4-5
Housing, Camshaft, 5-3, 5-11
Housing, Cplg, Qf / Pm08, 3-29
Housing, Fan, Radial Discharge, Sq Inlet, 2-131
Housing, Flywheel [Mit 2.0l], 6-18
Housing, Motor, Hyd [En], 4-11
Housing, Pump, 2-23
Housing, Sppt, Front Wheel, 2-75
Housing, T-Stat, 2 Holes [Mit], 6-22
Housing, Thermostat, 6-22
Housing, Throttle, 40mm [Bosch], 2-25, 2-27, 2-29
Housing, Valve, 4-5
Housingl, 4-10
Hsg & Switch Kit, Pump, Repair,, 4-24
Hub Assy, Wheel, 5 Bolt 4.50bc Taper B, 2-75
Hub, Drive, Brush, Disk, 1.00b [6t], 3-7, 3-9
Hub, Drive, Brush, Disk, 3hole 5.8bc, 2-5
Hub, Drive, Brush, Disk, 3hole 5.8bc[6t], 2-5

I

Idler Assy, Brush, Replmt [M20/T20, M30], 2-95, 2-97
Idler Door Kit, Replmt [M20/T20/M30] (CE ONLY), 2-95, 2-97
Impeller, 11.81d X 0.500b, 2-131
Impeller, 9.00d X 1.40w X 0.376b, 2-133
Impeller, 9.5d, 18 Bl, 2-129
Indicator, Press, 60psi (NA Only), 2-153
Indicator, Service, Fltr, Air [20h20 Dn] (CE ONLY), 2-35, 2-37, 2-57, 2-59
Insert, :Lrg [Venturi, FaST III], 4-30
Insert, Cap, Mount, Es Pump, 4-3
Insert, Cplg, Qm, Bm08, 3-29
Insert, Plt, Cam, Pump, Hyd, 4-7
Instr, Motor, Hyd, Repair [En], 4-11
Instr, Repair, Motor, Hyd, Gear, 4-5
Instr, Repair, Pump, 4-7
Instr, Seal Kit, Motor, 4-22
Instr, Valve, Steering, Repair, 4-13
Instr. Repair Info, Motor, 4-10
Insulation, 3-45
Insulation, Acstc, 0.05, 52.8 X 2.13, 2-43
Insulation, Acstc, 0.05, 52.8X21.13, 2-45
Insulation, Acstc, 1.0, 21.8 X 12.5 Adh, 2-15
Insulation, Acstc, Adh, 3-29
Insulation, Acstc, Rear, 3-29
Insulation, Acstc, Rnd, 0.8, 02.5d 0.5h, 2-17
Insulation, Flame-Retardant, 0.50, 2-129
Insulation, Flame-Retardant, 0.75-0.88, 2-11, 2-15, 2-129, 3-47
Insulation, Flame-Retardant, 1.0, 2-15
Insulation, Thermal, Hyd Blanket, 2-153
Isolator, 6-25, 6-29
Isolator [Epr], 2-31, 2-33
Isolator, Box, Relay, 2-25, 2-27, 2-29, 2-53, 2-55
Isolator, Rbr, 2-41, 2-63
Isolator, Vib, .50d, 2-23, 2-49, 2-51
Isolator, Vib, Bshg, 1.1d 0.6l .4b 0.78h, 2-43, 2-45, 2-65, 2-129, 2-131, 2-133

K

Key, 6-10
Key-Wdruff 0.25 1.00, 4-10
Key, Ignition [Set Of 2], 1-1, 2-13
Key, Motor, Hyd, 4-5
Key, Shaft, Pump, Hyd, 4-7
Key, Sq, 0.12 X 0.12, 0.50l, 2-39, 2-61
Key, Sq, 0.12 X 0.12, 0.75l, 4-22
Key, Sq, 0.12 X 0.12, 1.00l, 2-129
Key, Sq, 0.25 X 0.25, 1.25l, 2-95, 2-97
Key, Valve Stem, 5-3
Key, Woodruff, 0.25 1.00 [Asa#0808], 4-11
Keychain, Rectangle, Parts & Service, 2-13
Kit, Bellows, Pump, Detgt, 4-23
Kit, Brush, Motor, Ele, 4-3
Kit, Seal, Motor, Hyd, 4-5
Kit, Seal, Motor, Hyd, Gear[Barns], 4-22
Kit, Seal, Valve, Hyd [Cec], 4-22
Kit, Valve, Check, Pump, Water, 4-3
Knob Assy, Star, 1.12d 3ear M10, 2-107
Knob, Star, 2.80d 4ear 1.1l .31-18, Pyp, 2-105
Knob, Tee, 2.5 X 1.0 1.1l 0.38-16, Plstc, 2-17
Knobs, Adjmt, Weight, 4-29

L

Label [User, Attention, ec-H2O], 2-208
Label Kit, Panel, Replmt [M20/M30 ec-H20], 2-13
Label Kit, Panel, Replmt [M20/M30], 2-13
Label Set, Brush Indicator & Removal, 2-208
Label Set, Hi Temp, 2-208
Label Set, Info/Hzrd, Press Wash, 3-55
Label Set, Info/Hzrd, Swpr / Scrbr, 2-208
Label Set, Info/Hzrd, Swpr / Scrbr (CE Only), 2-208
Label Set, Info/Hzrd, Swpr / Scrbr, Tj (Japan Only), 2-208
Label, Caution [Apply Parking Brake], 2-208
Label, Caution [Apply Parking Brake] (CE & Japan Only), 2-208
Label, Logo, 05.75L 2Color [ES], 2-208
Label, Logo, 07.95L 2Color [FaST], 2-208
Label, Logo, 12.3L 4Color [ec-H2O], 2-208
Label, Logo, 16.9L 4Color [ec-H2O], 2-208
Label, Machine, Telem [Fcc, Usa, 2g/3g], 3-47
Label, Model, 2Color [M30], 2-208
Label, Switch, Rocker [M20/M30], 2-13
Lamp, 12vdc [Speaker], 2-7
Lamp, Bulb, Flsh, 3-39, 3-42
Lamp, Bulb, Strobe, 3-41, 3-43
Lamp, Halogen [Speaker], 2-7
Latch, 2-15, 2-43, 2-89, 2-95, 2-97, 3-61
Latch Assy, Mtg, Tank, Lpg, W/Nut, 2-71
Latch, Cover, 2-117
Latch, Door [Southco 91-562-07], 2-21, 2-109, 2-113
Latch, Hook, 2-111, 2-115
Lens, Amb, F/ Strobe / Flasher, 3-39, 3-41, 3-42, 3-43
Lens, Blu, F/ Strobe / Flasher, 3-39, 3-41, 3-42, 3-43
Lens, Red, F/ Strobe / Flasher, 3-39, 3-41, 3-42, 3-43
Light Assy, Panel, Side, 2-9
Light Kit, Flsh, Ci [M20 / T20 / M30], 3-39
Light Kit, Flsh, W/Ohg, Ci[M20/T20/M30], 3-42
Light Kit, Strobe, Ci [M20 / T20 / M30], 3-41
Light Kit, Strobe, W/ Ohg, Ci[M20/T20/M30], 3-43
Light, Flsh, Amb, 12-48vdc, 3-39, 3-42
Light, Led, .312D, 2 Volt [Tri-Color] (ec-H20 only), 2-13
Light, Panl, 14vdc, , 1.1 X 1.0, 2-13
Light, Panl, 14vdc, 1.1 X 1.0, 2-13
Light, Strobe, Amb, 12-48vdc, 3-41, 3-43
Linard Front Squeegee - Std., 1-2
Linatex Rear Squeegee - Std., 1-2
Linatex Rear Squeegee End Gasket, 1-2
Linatex Side Brush Squeegee, 1-2
Linatex Side Squeegee, 1-2
Link Assy, Rod-End, M12, 2-103
Lock-Off, 12v, Lpg [Mit], 6-29
Lock, Secondary, 2cav, Mp280 Sealed, 4-24
Loom, Convoluted, Split 5/8 [Mit], 6-15

M

Maint Kit, 400hr [M20/T20/M30 Lpg 2010], 1-1
Maint Kit, 400hr, Gas [M20/T20/M30], 1-1
Maint Kit, 400hr, Lpg [M20/T20/M30], 1-1
Maint Kit, 800hr [M20/T20/M30 Lpg 2010], 1-1
Maint Kit, 800hr, Gas [M20/T20/M30], 1-1
Maint Kit, 800hr, Lpg [M20/T20/M30], 1-1

Manifold, Exhaust, 5-9
Manifold, Exhaust [Mit 2.0/2.4l], 6-16
Manifold, Gas, Relief, Valve, 2-69
Manifold, Intake [1.6l], 2-25, 2-27, 2-29
Manifold, Intake [Mit 20/24m Tilt], 6-15
Manifold, Water, 3-29
Manual, Eng, Cd-Rom [Tier II,Gm1.6L], 3-67
Manual, Oprtr [M30 Gas/Lpg En], 3-67
Manual, Oprtr [M30 Gas/Lpg Es], 3-67
Manual, Oprtr [M30 Gas/Lpg Fr], 3-67
Manual, Oprtr [M30 Gas/Lpg, Bg, Ce], 3-67
Manual, Oprtr [M30 Gas/Lpg, Cn], 3-67
Manual, Oprtr [M30 Gas/Lpg, Cz, Ce], 3-67
Manual, Oprtr [M30 Gas/Lpg, De, Ce], 3-67
Manual, Oprtr [M30 Gas/Lpg, Dk, Ce], 3-67
Manual, Oprtr [M30 Gas/Lpg, Ee, Ce], 3-67
Manual, Oprtr [M30 Gas/Lpg, En, Ce], 3-67
Manual, Oprtr [M30 Gas/Lpg, Es, Ce], 3-67
Manual, Oprtr [M30 Gas/Lpg, Fi, Ce], 3-67
Manual, Oprtr [M30 Gas/Lpg, Fr, Ce], 3-67
Manual, Oprtr [M30 Gas/Lpg, Gr, Ce], 3-67
Manual, Oprtr [M30 Gas/Lpg, Hr], 3-67
Manual, Oprtr [M30 Gas/Lpg, Hu, Ce], 3-67
Manual, Oprtr [M30 Gas/Lpg, It, Ce], 3-67
Manual, Oprtr [M30 Gas/Lpg, Jp], 3-67
Manual, Oprtr [M30 Gas/Lpg, Lt, Ce], 3-67
Manual, Oprtr [M30 Gas/Lpg, Lv, Ce], 3-67
Manual, Oprtr [M30 Gas/Lpg, Nl, Ce], 3-67
Manual, Oprtr [M30 Gas/Lpg, No, Ce], 3-67
Manual, Oprtr [M30 Gas/Lpg, Pl, Ce], 3-67
Manual, Oprtr [M30 Gas/Lpg, Pt, Br], 3-67
Manual, Oprtr [M30 Gas/Lpg, Pt, Ce], 3-67
Manual, Oprtr [M30 Gas/Lpg, Ro, Ce], 3-67
Manual, Oprtr [M30 Gas/Lpg, Ru, Ce], 3-67
Manual, Oprtr [M30 Gas/Lpg, Se, Ce], 3-67
Manual, Oprtr [M30 Gas/Lpg, Si, Ce], 3-67
Manual, Oprtr [M30 Gas/Lpg, Sk, Ce], 3-67
Manual, Oprtr [M30 Gas/Lpg, Tr, Ce], 3-67
Manual, Parts [M30 Gas/Lpg En], 3-67
Manual, Service [M30 En], 3-67
Manual, Service, Cd-Rom [Mit2.0l], 3-67
Mat, Floor, 2-9
Media, Cd-Rom, Training [ec-H2O Tennant], 3-67
Media, Dvd, Oprtr [W/ Checklist M30], 3-67
Mirror, Convex, 0.50D, 3-45
Mixer , Lpg, 2-29
Mixer [E100lp], 6-30
Mixer, W/70deg Ftg, 2-29
Module Kit, Replmt [Ec-H20], 4-27
Module Kit, Replmt [Ec-H20] (See Breakdowns), 3-27
Module, Ecu, Gas [Gm1.6l 2700 Rpm], 2-25
Module, Ecu, Gas [Mit 2.0l 2013], 6-25
Module, Ecu, Lpg [GM1.6L 2700 RPM], 2-29
Module, Ecu, Lpg [Mit 2.0l 2013], 6-25
Module, Ecu,Gas[GM1.6L 2010 2700RPM], 2-27
Module, Ecu,Lpg[GM1.6L 2010], 2-29
Molding, Afmkt, Trim, Pvc, .08 .11, 01Ft, 2-9, 3-27
Molding, Trim, Pvc, .08-.11 06.8l, 2-65
Molding, Trim, Pvc, .08-.11 13.2l, 2-69
Molding, Trim, Pvc, .18-.31 07.5l, 2-91
Motor Kit, Pump, Repair,, 4-24
Motor Kit, Replmt, 2-129
Motor, Ele [12vdc, Shaker], 2-89
Motor, Ele, 12vdc, Pump, Water, 4-3
Motor, Ele, 12Vdc, Shakr, 2-89
Motor, Ele, Gear, 14vdc, Pump, Detgt, 4-23
Motor, Hyd Gear In 4.5 B 1500, 4-10
Motor, Hyd, Gear, [Int], 19.0 X 3000, 4-5
Motor, Hyd, Gear, Ext 0.17 Lh 3000, 2-131, 2-133
Motor, Hyd, Gear, Ext 0.19 Rh 3000, 4-22
Motor, Hyd, Gear, Ext 0.19 Rh 3000 (See Breakdowns), 2-133
Motor, Hyd, Gear, Int 04.5 Bi-Dir 1500, 2-95, 2-97
Motor, Hyd, Gear, Int 04.5 Bi-Dir 1500 (See Breakdowns), 2-95, 2-97
Motor, Hyd, Gear, Int 08.9 Bi-Dir 2500, 3-9, 4-11
Motor, Hyd, Gear, Int 08.9 Bi-Dir 2500 (See Breakdowns), 3-7, 3-9
Motor, Hyd, Gear, Int 19.0 Bi-Dir 3000 (See Breakdowns), 2-75
Mount Wldt, Valve, Pinch, Lh, 2-127
Mount Wldt, Valve, Pinch, Rh, 2-121
Mount, Fltr, Remote, 6-21
Muffler, Catalytic [Gm 1.6l 2007], 2-41
Muffler, Catalytic [Gm 1.6l 2010], 2-41
Muffler, Catalytic [Mit 2.0l 2013], 2-63
Muffler, Vacfan, 4.0id, 2-133

N

Nozzle, 3-51
Nozzle Kit, Spray, Ci [M30], 3-51
Nozzle, Spray [Pressure Washer], 3-53
Nozzle, Spray, Gun, 3-51
Nozzle, Wand, Plstc, 14.0l, 3-49
Nut, 6-9, 6-10
Nut-Hxslot .75-16 Pltd, 4-10
Nut, Adj, Mtg, Tank, Lpg, 2-71
Nut, Coil, F/#8, 4-15, 4-17, 4-19, 4-21
Nut, Coil, Nyl Patch, 4-15, 4-17, 4-19, 4-21
Nut, Flange, 6-13
Nut, Flng, M05-0.8, 2-29, 6-30
Nut, Flng, M8, 6-15, 6-16, 6-19, 6-21, 6-22
Nut, Ftg, Hyd, 0.56-18, 2-151
Nut, Hex, Flng, M5 X 0.80, 2-85
Nut, Hex, Flng, M6 X 1.00, 2-61, 2-65
Nut, Hex, Flng, M8 X 1.25, 2-9, 2-31, 2-33, 2-109, 2-113, 2-151
Nut, Hex, Jam, .31-24, 2-79
Nut, Hex, Jam, .31-24, Lh, 2-79
Nut, Hex, Jam, .50-20, 2-99, 3-11
Nut, Hex, Jam, .50-20, Lh, 2-99
Nut, Hex, Jam, M10 X 1.5, Ss, 2-39, 2-71
Nut, Hex, Jam, M20 X 1.5, 2-17
Nut, Hex, Lock, .25-20, Nl, 2-69, 2-129, 2-133
Nut, Hex, Lock, .25-20, Nl, Ss, 2-81, 2-83
Nut, Hex, Lock, .31-18, Nl, 2-39
Nut, Hex, Lock, .31-18, Nl (NA ONLY), 2-15
Nut, Hex, Lock, .31-18, Nl, Thin, 2-15
Nut, Hex, Lock, .31-18, Nl, Thin (CE ONLY), 2-15
Nut, Hex, Lock, .31-24, Nl, Thin, 2-133
Nut, Hex, Lock, .38-16, Nl, Ss, 2-71, 3-11
Nut, Hex, Lock, .38-16, Nl, Thin, 2-71, 2-83, 2-129, 2-133
Nut, Hex, Lock, .50-13, Nl, Ss, 2-107
Nut, Hex, Lock, .50-13, Nl, Thin, 2-99
Nut, Hex, Lock, .50-20, Nl, Thin, 2-99
Nut, Hex, Lock, .75-10, Nl, 2-75
Nut, Hex, Lock, #08-32, Nl, 2-13
Nut, Hex, Lock, M10 X 1.5, Nl, 2-43, 2-45, 2-65, 2-71, 2-133, 3-45, 3-63
Nut, Hex, Lock, M10 X 1.5, Nl, Ss, 2-85, 2-87, 2-93, 2-103, 2-107
Nut, Hex, Lock, M12 X 1.75, Nl, 2-23, 2-77
Nut, Hex, Lock, M12 X 1.75, Nl, Ss, 2-99, 2-103
Nut, Hex, Lock, M12 X 1.75,Nl, 2-49, 2-51
Nut, Hex, Lock, M4 X 0.7, Nl, Ss, 2-83
Nut, Hex, Lock, M4 X 0.70, Nl, 2-15, 2-43, 2-85, 3-65
Nut, Hex, Lock, M4 X 0.70, Nl, Ss, 2-21, 2-109, 2-113, 3-3, 3-27
Nut, Hex, Lock, M5 X 0.80, Nl, 2-15, 2-73, 3-27, 3-47, 3-51
Nut, Hex, Lock, M5 X 0.80, Nl, Ss, 2-123, 3-13, 3-37, 3-39, 3-41, 3-42, 3-43, 3-61
Nut, Hex, Lock, M6 X 1.00, Nl, 2-9, 2-15, 2-17, 2-19, 2-35, 2-37, 2-43, 2-45, 2-57, 2-59, 2-65, 2-69, 2-79, 3-47, 3-57, 3-59, 3-65
Nut, Hex, Lock, M6 X 1.00, Nl, Ss, 2-13, 2-93, 2-103, 2-123, 2-125, 3-47
Nut, Hex, Lock, M8 X 1.25, Nl, 2-39, 2-43, 2-47, 2-57, 2-59, 2-61, 2-65, 2-67, 2-69, 2-71, 2-73, 2-79, 2-83, 2-111, 2-115, 2-151, 3-15, 3-65
Nut, Hex, Lock, M8 X 1.25, Nl (CE Only), 2-43, 2-45

Nut, Hex, Lock, M8 X 1.25, Nl, Ss, 2-41, 2-47, 2-63, 2-83, 2-87, 2-93, 2-95, 2-97, 2-99, 2-101, 2-103, 2-105, 2-107, 2-109, 2-113, 2-121, 2-125, 2-127, 2-131, 3-7, 3-15
Nut, Hex, M10 X 1.50 [Stover], 2-63
Nut, Hex, Sltd, .75-16, 2-95, 2-97
Nut, Hex, Sltd, 1.00-20, 2-77
Nut, Hex, Sltd, 1.12-18, 2-75
Nut, Hex, Sltd, M20 X 2.5, 8, 2-95, 2-97
Nut, Hex, Std, .25-20, 2-25, 2-27, 2-29, 2-53, 2-55
Nut, Hex, Std, .25-28, 2-81
Nut, Hex, Std, .31-18, 2-39, 3-45
Nut, Hex, Std, .38-16, 2-41, 2-63
Nut, Hex, Std, 06-32, 2-117
Nut, Hex, Std, M10 X 1.50, 2-89
Nut, Hex, Std, M12 X 1.75, Ss, 2-111, 2-115, 2-131
Nut, Hex, Std, M16 X 2.00, 2-19
Nut, Hex, Std, M3 X 0.50, 8, 2-89
Nut, Hex, Std, M5 X 0.8, 8, 2-83
Nut, Hex, Std, M5 X 0.80, 8, 2-23
Nut, Hex, Std, M6 X 1.00, 8, 3-27
Nut, Hex, Std, M8 X 1.25, 2-9, 2-39
Nut, Hex, Std, M8 X 1.25, Brs, 2-23
Nut, Hex, Std, M8 X 1.25, Ss, 2-111, 2-115
Nut, Hex, Stover, M10 X 1.50, 2-41
Nut, Hex, Stover, M8, 2-63
Nut, Hex, Stover, M8 X 1.25, 2-45
Nut, Low Crown, .50-20, 2-129
Nut, M10-1.25 Flg [Mit], 6-16, 6-18
Nut, M10-1.25, Hx Flg [Mit], 6-25
Nut, M6-1.0 Flange [Mit], 6-25, 6-29
Nut, M8-1.25 [Mit], 6-15
Nut, Manifold, Exhaust, M8 X 1.25, 5-9
Nut, Motor, Hyd, 4-5
Nut, Solenoid, 4-15, 4-17, 4-19, 4-21
Nut, Strainer, 6-7
Nut, T, M10 X 1.50 X 15.80od X 13.0l, 2-109, 2-113
Nut, T, M8 X 1.25 X 14.50od X 9.5l, 3-7
Nut, Wheel, .50-20 X 60 Angle, 2-75

O

O-Ring, 6-3, 6-5, 6-12
O-Ring [Mit 208 Buna-N], 6-22, 6-23
Ohg Kit, Ci [M20 And T20], 3-45
Oil, Hyd [El, Iso 100, 01gal], 1-2
Oil, Hyd [El, Iso 100, 05gal], 1-2
Oil, Hyd [El, Iso 32, 01gal], 1-2
Oil, Hyd [El, Iso 32, 05gal], 1-2
Oil, Hyd [El, Iso 68, 01gal], 1-2
Oil, Hyd [El, Iso 68, 05gal], 1-2
Oil, Hydraulic 68 [20l] (CE ONLY), 1-2
Outlet, Water, W/Plug [Mit 2.0/2.4l], 6-22

P

Pad, Armrest, 4-29
Pad, Pedal, Brake, 3.96l 2.36w 0.75, 2-79
Pad, Tank, Hyd [W/Psa], 2-151, 2-153
Paint, Airdry, Blk, 12oz (Not Europe), 1-2
Paint, Airdry, Gray, 12oz [Enamel] (Not Europe), 1-2
Paint, Airdry, Iron Gray,12oz[Pwdr Coat] (Not Europe), 1-2
Paint, Airdry, Off-White, 12oz (Not Europe), 1-2
Paint, Airdry, Teal, 12oz, Solid (Not Europe), 1-2
Pan, Oil, 6-7
Pan, Oil, W/ Baffle / Plug / Seal, 5-8
Panel Kit, Instmt, Repair [M20/M30], 2-13
Panel Wldt, Filler, 2-7
Panel Wldt, Gas, Replmt, 2-9
Panel Wldt, Gas, Replmt [W/Fast], 2-9
Panel Wldt, Gas, Replmt, Tj, 2-9
Panel Wldt, Gas, Replmt, Tj, W/ Es, 2-9
Panel Wldt, Gas, Replmt, Tj[W/Fast], 2-9
Panel Wldt, Gas, W/ Es, Replmt, 2-9
Panel Wldt, Lpg, Replmt, 2-9
Panel Wldt, Lpg, Replmt [W/Fast], 2-9
Panel Wldt, Lpg, Replmt, Ce, 2-9
Panel Wldt, Lpg, Replmt, Ce, W/ Es, 2-9
Panel Wldt, Lpg, Replmt, Ce[W/FaST], 2-9
Panel Wldt, Lpg, Replmt, Tj, 2-9
Panel Wldt, Lpg, Replmt, Tj, W/ Es, 2-9
Panel Wldt, Lpg, Replmt, Tj[W/Fast], 2-9
Panel Wldt, Lpg, W/ Es, Replmt, 2-9
Panel, Access, Door, 2-9, 3-47
Panel, Access, Floor, 2-9
Panel, Adj, 2-9
Panel, Instmt, Rh, Gas, Replmt, 2-13
Panel, Instmt, Rh, Lpg, Replmt, 2-13
Panel, Instmt, Rh, Lpg, Replmt, Ce / Tj, 2-13
Panel, Kit, Instmt Replmt [M20/M30 ec-H20], 2-13
Pawl, Str, 2-95, 2-97
Pedal, Brake, Lock, 2-79
Pedal, Propel, 2-81
Pin Kit, Wheel, Ci [M20/T20/M30], 2-7, 2-91, 3-13
Pin Wldt, 3-11
Pin Wldt, Front, 2-105, 3-9
Pin Wldt, Pivot, Hppr, 2-7
Pin, 0.63d 01.8l, 1/M10h, 2cham, 2-107
Pin, 0.87d 01.8l, 1/M6 X 1.0, 1cham,Stl, 2-85
Pin, 30mmd X 215mml, 2-7, 2-91, 3-13
Pin, Arm, Safety, 2-85
Pin, Clevis, 0.31d X 0.75l, 3-7
Pin, Clevis, 0.31d X 1.00l, 2-79
Pin, Clevis, 0.37d X 0.75l, 2-85
Pin, Clevis, 0.37d X 1.31l, 3-11
Pin, Clevis, 0.37d X 1.50l, 3-11
Pin, Clevis, 0.37d X 1.75l, 2-93, 2-99, 2-111, 2-115, 3-11
Pin, Clevis, 0.37d X 2.00l, 2-103
Pin, Clevis, 0.50 D X 4.50l, 2-81
Pin, Clevis, 0.75d X 2.00l, 2-99
Pin, Clevis, 0.88d X 2.25l, 2-85
Pin, Cotter, .062 X 0.50, 2-79
Pin, Cotter, .094 X 1.00, 2-79, 2-93, 2-99, 2-103, 3-7, 3-11
Pin, Cotter, .125 X 1.00, 2-81, 2-111, 2-115
Pin, Cotter, .125 X 1.25, 2-95, 2-97
Pin, Cotter, .125 X 1.75, 2-77
Pin, Cotter, .125 X 2.00, 2-75
Pin, Cotter, .156 X 1.25, 2-99
Pin, Cotter, .156 X 2.00, 2-91
Pin, Cotter, Hair, 0.31d .058 Wir, 2-15
Pin, Cotter, Hair, 0.38d .072 Wir, 2-99
Pin, Cotter, Hair, 0.62d .120 Wir, 2-85
Pin, Cotter, Hair, 1.00d .178 Wir, 2-7, 2-91, 3-13
Pin, Cotter, Hair, Dbl, 2-7, 3-13
Pin, Dowel, 6-3, 6-9, 6-10, 6-12
Pin, Dowel [Bn], 4-9
Pin, Dowel, Pump, Hyd, 4-7
Pin, Flywheel [Mit 20/20m], 6-18
Pin, Grvd, 0.43d 01.8l [303ss], 2-105, 3-9
Pin, Hitch, .375d X 3.12l, Pl, 3-7, 3-9, 3-63
Pin, Lift, Drain, 2-125
Pin, Locating, Lpg, 2-71
Pin, Lock, Cyl Head, 14mm X 17mm, 5-3, 5-5
Pin, Lock, Transmission, 5-5
Pin, Locking, Steering, Tilt, 2-17
Pin, Ring, Lock, Hsng, Water Pump, 5-7
Pin, Roll, .187d X 1.62l, .187/.192, 2-7, 2-91, 3-13
Pin, Spring, 6-9
Pin, Valve, Steering, 4-13
Pipe Kit, Exhaust, Replmt [M20.T20, M30], 2-41
Pipe Kit, Exhaust, Replmt [Mako Mitsu], 2-63
Piston Kit, 4-25
Piston Set, Ring, 6-10
Piston, Pin [Std A], 6-10
Piston, Pin [Std B], 6-10
Piston, Pin [Std C], 6-10
Piston, Pump, Hyd, Gear, 4-5
Piston, W/ Pin, Std, 5-5
Pivot Wldt, Brush, Side, 3-11
Plate Assy, Orifice, 0.0105Id, Green, 4-30
Plate Kit, Repair (Replaced by 9006895), 2-23
Plate Wldt, Fan, Hub [Gm 1.6l], 2-39
Plate Wldt, Hose, Vacuum, 2-129, 2-131
Plate Wldt, Lift, Sqge, 2-103
Plate Wldt, Mtg, 3-27
Plate Wldt, Mtg, Fan, 2-131
Plate Wldt, Retainer, Sqge, 3-9
Plate Wldt, Seat, 2-15
Plate Wldt, Shaft, Fan [Shaft Extended], 2-61
Plate Wldt, Wrap, Brush, 2-99
Plate, Bellcrank, 2-85
Plate, Bellcrank, Hppr, Lock, 2-85
Plate, Bottom, Hppr, 2-93
Plate, Cam, 4-7
Plate, Cover, 4-7
Plate, Cover, Screen, 3-65
Plate, Distance, Pump, Hyd, 4-9

Plate, Door, Clean-Out [Mit2013], 2-65
Plate, Guard, Belt [Gm 1.6l], 2-23
Plate, Hook, Latch, [M20], 3-61
Plate, Hsng [FaST], 3-3
Plate, Inlet, 2-133
Plate, Inspection, 3-27
Plate, Kit, Repair, 2-23
Plate, Label, Soltn Tank (ec-H20 only), 2-118
Plate, Mtg [Epr], 6-29
Plate, Mtg [FaST], 3-19
Plate, Mtg, Ecu [Mit 2.0/2.4l], 6-25
Plate, Mtg, Latch, 2-117
Plate, Mtg, Light, 2-13
Plate, Mtg, Prop Rod, 2-125
Plate, Mtg, Pump, 3-27, 3-51
Plate, Mtg, Relay, 2-25, 2-27, 2-29
Plate, Pin, Clevis, Upper, 2-85
Plate, Retainer, 2-93
Plate, Shield, Dust, 2-61
Plate, Skirt, Front, 2-101
Plate, Spacer, Motor, Hyd [En], 4-11
Plate, Sppt, 2-79, 3-29
Plate, Sppt, Tank, 2-125
Plate, Tank, Bottom, 2-125
Plate, Tensioner, Adj [Mit 2.0/2.4l], 6-17
Plate, Valve, Motor, Hyd, 4-5
Plate, Valve, Pump, Hyd, 4-7
Plate, Water, Outlet [Mit Bypass], 6-23
Plate, Wear, Steering Valve, 4-13
Plug, 4-5, 6-3
Plug #10, 4-10
Plug #4, 4-10
Plug Assy [Cl], 4-13
Plug Kit, Drain, Recvy, Ci, 2-125
Plug Orifice, Valve, Hyd, .140, 4-15, 4-17
Plug Wldt, Drive, Brush, 2-95, 2-97
Plug Wldt, Drive, Brush, Sweep, 2-95, 2-97
Plug, .12npt, Ss, 2-25, 2-27, 2-29
Plug, 1/8 Npt, Brs, Skt Hd [Mit], 6-15
Plug, 1/8npt, Brs [Mit], 6-30
Plug, 3/8npt X 5/16, Brs [Mit], 6-21
Plug, Bore, Valve, Relief, Oil Press, 5-7
Plug, Cap, 6-12
Plug, Drain, Expandable, 4.75-6.00, 2-125
Plug, Drain, Oil Pan, M14 X 1.5 X 12, 5-8
Plug, Flare, 37deg [Mit], 6-7
Plug, Hole, Coolant, Eng Block, 5-5
Plug, Hole, Core, Eng Block, 5-8
Plug, Hole, Injector, 2-29
Plug, Hole, Rnd, 0.50h .03-.12, Blk Nyl, 2-13
Plug, Hole, Rnd, 0.88h .03-.12, Blk Nyl, 2-9
Plug, Hole, Rnd, 1.00h .03-.12, Blk Nyl, 2-9
Plug, Hole, Rnd, 1.25h .03-.12, Blk Nyl (NA ONLY), 2-15
Plug, Hole, Rnd, 2.50h .03-.25, Blk Nyl, 2-9
Plug, Hole, Rt, Rocker Switch, .87 X 1.7, 2-13
Plug, Hole, Soltn Tank, Blk Pyu, 2-117
Plug, Hose, Pyu, 2-121, 2-127
Plug, Hsng, Oil Pump, 5-7
Plug, Injector [Mit], 6-15
Plug, Manifold, Intake, 2-25, 2-27, 2-29
Plug, Oil, Drain, 6-7
Plug, Orifice, 0.060, Ss [FaST Ii+], 4-30
Plug, Orifice, Valve, Hyd, .030, 4-15, 4-17
Plug, Orifice, Valve, Hyd, .040, 4-15, 4-17, 4-19, 4-21
Plug, Orifice, Valve, Hyd, .046, 4-15, 4-17
Plug, Port, Sensor [Map], 2-25, 2-27, 2-29
Plug, Pump, Hyd, Gear, 4-5
Plug, Restrictor, 3-33
Plug, Rubber, 6-7
Plug, Spark, 1-1, 6-19
Plug, Spark [Mitsubishi 2015 12mm], 6-19
Plug, Taper, 6-3
Plug, Tapper, 6-12
Plunger, 3-49
Pop Valve, 4-25
Poppet, Pump, Hyd, Gear, 4-5
Pouch, 3-29
Pulley Assy, Damper, Torsional, 6-10
Pulley, Idler, 6-9
Pulley, Pump, Water, 6-13
Pulley, Tension, Belt, Timing, 5-11
Pulley, Tensioner, 6-9
Pulley, Tensioner, Assy[Mit2.0/2.4l], 6-17
Pump Assy, Column, Es, 4-3
Pump Assy, Column, Es (See Breakdowns), 3-5
Pump Kit, Hyd, Rotating [Cessna], 4-7
Pump kit, Mtg, Aux, Ci [M20 & T20], 2-149
Pump, Diaphragm, 4-24
Pump, Detgt, 14vdc, 150ml/Min 20psi, 3-3, 4-23
Pump, Diaphragm (See Breakdowns), 3-51
Pump, Fuel, Hi Press [Gm 1.6l/3.0l], 2-69
Pump, Gear, Drive, Oil, 6-12
Pump, Gear, Oil, 6-12
Pump, Hyd, Gear, Ext, 3, 00.85 2500, Cw, 4-9
Pump, Hyd, Gear, Ext, 3, 00.85 2500, CW (See Breakdowns) (Replaced by 9007143), 2-149
Pump, Hyd, Piston, Var, 1.24 4000, Cw, 4-7
Pump, Hyd, Piston, Var, 1.24 4000, Cw (See Breakdowns), 2-149
Pump, Hyd, Press Washer, 4-25
Pump, Hyd, Press Washer (See Breakdowns), 3-55
Pump, Oil, 5-7, 6-12
Pump, Soltn, 13.7vdc, 65psi [FaST Ii+], 3-19
Pump, Soltn, Ele, 13.7vdc,12/28psi, 3-27
Pump, Water, 6-13
Pump, Water [Gm], 5-7

R

Race Thrust, 4-10
Race, Brg, Pump, Hyd, 4-7
Rad Screen Kit, Replmt [M/T20,M30 G/Lp], 3-65
Radiator, Alm, 2-43
Radiator, W/ Hyd Cooler [Side X Side], 2-45, 2-65
Rail, Injector, Fuel, Plstc, 2-25, 2-27
Rear Recirculation Flap, 1-1
Rear Skirt, 1-1
Receptacle, Lamp [Speaker], 2-7
Regulator , 6-29
Regulator [Ep], 2-31, 2-33
Regulator, Press, Electronic [Epr], 6-30
Relay, 12vdc, 020a, Spdt [Mini], 2-205
Relay, 12vdc, 040a, Spdt No, 2-73, 2-201, 2-205, 3-19, 3-27, 3-51, 3-53
Repair Kit, Mixer, 2-29, 6-30
Repair Kit, Vaporizer, 6-29
Reservoir, Hyd, 10.0gal, Replmt, 2-153
Resistor, Ele, Plug [2.5K , 1W], 2-198
Resistor, Ele, Plug [430 , 2w], 3-36
Retainer, Boot, Steering Column, 2-17
Retainer, Camshaft, 5-11
Retainer, Motor, Hyd, 4-5
Retainer, Skirt, .12, 0.8w X 09.1l, Gray, 2-101
Retainer, Skirt, .12, Lh, 2-101
Retainer, Skirt, .12, Rh, 2-101
Retainer, Skirt, Front, 2-101
Retainer, Sparkplug, 2 Way, 5-12
Retainer, Sparkplug, 3 Way, 5-12
Retainer, Spring, 2-103
Retainer, Sqge, 3-7
Retainer, Sqge, Lh Side, 2-113
Retainer, Sqge, Rh Side, 2-109
Ring Kit, Piston, Std 78.95-79.02mm, 5-5
Ring Kit, Sppt, 4-25
Ring, Lock, 4-7
Ring, Motor, Hyd, 4-5
Ring, Mtg, Sqge, .50l, 2-105
Ring, Retainer, Steering Valve, 4-13
Ring, Retaining, 4-7, 6-17
Ring, Retaining, Ext, 0.38d, [E-Ring], 2-105, 2-107, 3-9
Ring, Retaining, Ext, 0.38d, [Selflock], 2-103
Ring, Retaining, Ext, 0.50d, Hd, 2-17
Ring, Retaining, Ext, 0.62d, Hd, 2-107
Ring, Retaining, Ext, 0.98d, [E-Ring], 2-79
Ring, Retaining, Ext, 1.00d, Basic, 2-95, 2-97
Ring, Retaining, Int, 2.00d, 2-85
Ring, Retaining, Pump, Hyd, 4-7
Rivet, Plstc, .250D X 0.90, 2-17, 3-29, 3-49, 3-53
Rod Assy, Connecting, 6-10
Rod Wldt, Arm, Safety, 2-85
Rod-End, .25-28rh Fem 0.25b [Teflon], 2-81
Rod-End, 0.50-20lh Fem 0.50-20stud, 2-99
Rod-End, 0.50-20rh Fem 0.50b, 2-99
Rod-End, 0.50-20rh Mal 0.50b, 3-11
Rod, Connecting, M08 X 45, 5-5

Rod, Hanger, Isolator, 2-41, 2-63
Rod, Thrd, 2 End, .31-24 7.0l, Pl, 2-79
Rod, Thrd, 2 End, .50-20 04.9l, Rh / Lh, 2-99
Roller, Brg, 2-121, 2-127

S

Screen Wldt, Hppr, 2-87
Screen, Oil, 6-7
Screen, Oil Pump, W/ Suc Pipe, 5-7
Screen, Pump, 3-5
Screen, Vacuum, 2-125
Screw, 2-31, 2-33, 4-10, 6-5, 6-12
Screw, Adj, Valve, Hyd, 5-3
Screw, Btn, M6 X 1.0 X 20, 10.9, Blk, 3-47
Screw, Btn, M8 X 1.25 X 16, Ss, 2-121, 2-127
Screw, Btn, M8 X 1.25 X 20, Blk, 2-109, 2-113, 3-61
Screw, Btn, M8 X 1.25 X 25, Ss, 2-99, 3-7
Screw, Cap, 4-7
Screw, Cap, Motor, Hyd, 4-5
Screw, Flt, Soc, .25-20 X 1.00, Al, 2-129, 2-133
Screw, Flt, Soc, .38-16 X 0.75, Al, 2-39
Screw, Flt, Soc, .38-16 X 1.00, Al, 2-61
Screw, Flt, Soc, .38-16 X 1.50, Al, 2-129
Screw, Flt, Soc, M10 X 1.50 X 25, 10.9, 2-109, 2-113
Screw, Flt, Soc, M8 X 1.25 X 20, Al, Blk, 2-109, 2-113
Screw, Flt, Soc, M8 X 1.25 X 30, Ss, 2-121, 2-127
Screw, Hex, .25-10 X 0.75, Fmg/A, Ss, 2-125
Screw, Hex, .25-20 X 0.50, G5, 2-23, 2-25, 2-27, 2-29, 2-53, 2-55
Screw, Hex, .25-20 X 0.75, G5, 2-25, 2-27, 2-29
Screw, Hex, .25-20 X 0.75, Nl, 2-133
Screw, Hex, .25-20 X 1.00, 5, 3-9
Screw, Hex, .25-20 X 1.00, G5, 3-7
Screw, Hex, .25-20 X 1.75, Ss, 2-81
Screw, Hex, .25-20 X 2.25, Ss, 2-81
Screw, Hex, .31-18 X 1.75, G5, 2-39
Screw, Hex, .31-18 X 4.50, G5, 2-39
Screw, Hex, .31-24 X 0.75, Nl, 2-83
Screw, Hex, .38-16 X 0.75, G5, 2-39
Screw, Hex, .38-16 X 0.75, Nl, 2-95, 2-97, 3-7, 3-9
Screw, Hex, .38-16 X 0.88, G5, 3-63
Screw, Hex, .38-16 X 1.00, 5, 2-83
Screw, Hex, .38-16 X 1.25, G5, 2-149
Screw, Hex, .38-16 X 1.25, Nl, 2-83
Screw, Hex, .38-16 X 1.50, Ss, 3-11
Screw, Hex, .38-16 X 2.00, Ss, 2-83
Screw, Hex, .38-16 X 3.00, G5, 2-71
Screw, Hex, .38-16 X 3.75, G5, 2-71
Screw, Hex, .50-13 X 1.25, G5, 2-23
Screw, Hex, .50-13 X 1.50, G5, 2-99
Screw, Hex, .50-13 X 3.00, 18-8, Ss, 2-107
Screw, Hex, .75-10 X 3.25, G5, 2-75
Screw, Hex, .75-10 X 4.00, 5, 2-75
Screw, Hex, 10-16 X 0.62, Fmg/Ab, Pl, 3-51, 3-53
Screw, Hex, 10-24 X 0.50, Ss, 2-39
Screw, Hex, M07-1.00 X 20.0, 8.8, 2-23
Screw, Hex, M10 X 1.25 X 25, 8.8, 2-49, 2-51
Screw, Hex, M10 X 1.5 X 16, 8.8, 2-17
Screw, Hex, M10 X 1.5 X 25, Ss, 2-111, 2-115
Screw, Hex, M10 X 1.5 X 30, 8.8, 3-45
Screw, Hex, M10 X 1.5 X 35, 8.8, 2-63
Screw, Hex, M10 X 1.50 X 20, 8.8, 2-39, 2-41, 2-43
Screw, Hex, M10 X 1.50 X 20, Ss, 2-89, 2-93
Screw, Hex, M10 X 1.50 X 25, 8.8, 2-7, 2-9, 2-23, 2-45
Screw, Hex, M10 X 1.50 X 30, Ss, 2-7, 2-93, 2-103, 3-13
Screw, Hex, M10 X 1.50 X 35, 10.9, 3-63
Screw, Hex, M10 X 1.50 X 35, 8.8, 2-41, 3-63
Screw, Hex, M10 X 1.50 X 40, 8.8, 2-133
Screw, Hex, M10 X 1.50 X 45, 8.8, 2-45, 2-65
Screw, Hex, M10 X 1.50 X 50, Ss, 3-55
Screw, Hex, M10 X 1.50 X 60, 8.8, 2-89
Screw, Hex, M10 X 1.50 X 80, 8.8, 2-85, 3-63
Screw, Hex, M12 X 1.75 X 30, 8.8, 3-11
Screw, Hex, M12 X 1.75 X 35, 8.8, 2-49, 2-51
Screw, Hex, M12 X 1.75 X 40, 8.8, 2-77, 2-99
Screw, Hex, M12 X 1.75 X 55, Ss, 2-111, 2-115
Screw, Hex, M12 X 1.75 X 60, 8.8, 2-23, 2-49, 2-51, 2-99
Screw, Hex, M16 X 2.00 X 90, 8.8, 2-19
Screw, Hex, M4 X 0.70 X 10, Ss, 3-65
Screw, Hex, M4 X 0.70 X 12, 8.8, 2-85, 3-27
Screw, Hex, M4 X 0.70 X 50, Ss, 4-27
Screw, Hex, M5 X 0.8 X 20, 8.8, 2-83
Screw, Hex, M5 X 0.80 X 10, Fmg, 2-99, 3-27
Screw, Hex, M5 X 0.80 X 12, Ss, 3-13, 3-63
Screw, Hex, M5 X 0.80 X 16, Fmg, 3-49
Screw, Hex, M5 X 0.80 X 16, Ss, 3-47
Screw, Hex, M5 X 0.80 X 20, 8.8, 2-85, 3-27
Screw, Hex, M6 X 1.0 X 16, Fmg, 2-81
Screw, Hex, M6 X 1.0 X 20, 9.8, Sems, 2-13, 2-17
Screw, Hex, M6 X 1.0 X 20, Ss, 2-63, 2-93
Screw, Hex, M6 X 1.0 X 25, Ss, 2-111, 2-115
Screw, Hex, M6 X 1.00 X 10, Fmg, 3-3
Screw, Hex, M6 X 1.00 X 12, Ss, 2-89, 3-27, 3-61
Screw, Hex, M6 X 1.00 X 16, 8.8, 2-9, 2-19, 2-25, 2-27, 2-29, 2-31, 2-43, 2-45, 2-71, 2-79, 2-85
Screw, Hex, M6 X 1.00 X 16, Fmg, 2-7, 2-45, 2-85, 2-101, 3-19, 3-65
Screw, Hex, M6 X 1.00 X 16, Ss, 3-19
Screw, Hex, M6 X 1.00 X 20, 8.8, 2-23, 2-63
Screw, Hex, M6 X 1.00 X 20, 9.8, Sems, 2-45, 2-65, 3-27, 3-47
Screw, Hex, M6 X 1.00 X 20, Ss, 2-41, 2-111, 2-115, 2-123, 2-125
Screw, Hex, M6 X 1.00 X 25, 8.8, 2-15
Screw, Hex, M6 X 1.00 X 25, 9.8 Sems, 2-35, 2-37, 2-43, 2-45, 2-57, 2-59, 2-65
Screw, Hex, M6 X 1.00 X 25, 9.8, Sems, 3-65
Screw, Hex, M6 X 1.00 X 25, Fmg, 2-151
Screw, Hex, M6 X 1.00 X 35, 8.8, 2-25, 2-27, 2-29
Screw, Hex, M6 X 1.00 X 35, Ss, 3-27
Screw, Hex, M6 X 1.00 X 50, 8.8, 2-69
Screw, Hex, M6 X 1.00 X 55, Fl, Ss, 2-125
Screw, Hex, M6 X 1.00 X 60, 8.8, 2-79, 3-57, 3-59
Screw, Hex, M6X1.00X16, Ss, 2-43
Screw, Hex, M8 X 1.25 X 110, Ss, 2-105, 3-15
Screw, Hex, M8 X 1.25 X 120, 8.8, Fl, 2-61
Screw, Hex, M8 X 1.25 X 130, 8.8, 2-95, 2-97
Screw, Hex, M8 X 1.25 X 16, 8.8, 2-61
Screw, Hex, M8 X 1.25 X 16, 8.8 (CE Only), 2-43, 2-45
Screw, Hex, M8 X 1.25 X 16, Ss, 2-95, 2-97, 2-121, 2-127, 3-55
Screw, Hex, M8 X 1.25 X 20, 8.8, 2-9, 2-15, 2-19, 2-21, 2-39, 2-43, 2-45, 2-47, 2-61, 2-67, 2-69, 2-75
Screw, Hex, M8 X 1.25 X 20, Ss, 2-9, 2-71, 2-89, 2-95, 2-97, 2-99, 2-101, 2-111, 2-115, 2-117, 2-121, 2-127, 2-131, 2-155, 3-5, 3-27, 3-29, 3-37, 3-39, 3-41, 3-51
Screw, Hex, M8 X 1.25 X 20, Ss, Sems, 2-15, 2-21, 2-118, 2-125, 2-129, 3-19
Screw, Hex, M8 X 1.25 X 25, 8.8, 2-35, 2-37, 2-43, 2-45, 2-57, 2-59, 2-61, 2-65, 2-121, 2-127, 2-131
Screw, Hex, M8 X 1.25 X 25, 9.8, Sems, 2-7, 2-9, 2-21, 2-45, 2-47, 2-65, 2-71, 2-73, 2-79, 2-91, 2-117, 2-129, 2-133, 2-151, 3-55, 3-65
Screw, Hex, M8 X 1.25 X 25, Fmg, 2-101, 3-3, 3-19
Screw, Hex, M8 X 1.25 X 25, Ss, 2-47, 2-83, 2-87, 2-93, 2-95, 2-97, 2-101, 2-125, 2-131, 3-7, 3-11, 3-15, 3-55
Screw, Hex, M8 X 1.25 X 30, 8.8, 2-61, 2-121, 2-127
Screw, Hex, M8 X 1.25 X 30, 9.8, Sems, 2-69, 2-71, 2-151, 2-153, 3-59, 3-65

Screw, Hex, M8 X 1.25 X 30, Ss, 2-101, 2-103, 2-131
Screw, Hex, M8 X 1.25 X 35, 8.8, 2-79, 2-121, 2-127
Screw, Hex, M8 X 1.25 X 35, 9.8, Sems, 2-45, 2-65, 3-65
Screw, Hex, M8 X 1.25 X 35, Fl, Ss, 2-103, 2-131
Screw, Hex, M8 X 1.25 X 40, 8.8, Fl, 2-61
Screw, Hex, M8 X 1.25 X 40, Ss, Nl, 2-83
Screw, Hex, M8 X 1.25 X 45, Ss, 2-41, 2-63, 2-107
Screw, Hex, M8 X 1.25 X 50, 8.8, 2-83
Screw, Hex, M8 X 1.25 X 50, Fl, Ss, 2-101
Screw, Hex, M8 X 1.25 X 60, 8.8, 2-103
Screw, Hex, M8 X 1.25 X 60, 8.8, Fl, 2-9, 2-39
Screw, Hex, M8 X 1.25 X 60, Fl, 2-99
Screw, Hex, M8 X 1.25 X 70, 8.8, 2-79
Screw, Hex, M8 X 1.25 X 90, 8.8, 2-61, 2-107
Screw, Motor, Hyd [En], 4-11
Screw, Mtg [Ehpr98], 4-17, 4-21
Screw, Pan, 12-16 X 0.50, F/ Plstc (ec-H20 only), 2-118
Screw, Pan, M4 X 0.7 X 35, Ss, 2-83
Screw, Pan, M8 X 1.25 X 25, Blk, 2-9, 2-13, 2-15, 2-17, 2-21
Screw, Pan, Phl, 06-20 X 0.50, Fmg/Ab, 2-15, 2-21
Screw, Pan, Phl, 06-32 X 0.38, G1, 2-117
Screw, Pan, Phl, 12-16 X 0.50, F/ Plstc, 2-117, 2-125, 3-66
Screw, Pan, Phl, M3 X 0.50 X 20, 4.8, 2-89
Screw, Pan, Phl, M4 X 0.70 X 10, Ss, 2-109, 2-113
Screw, Pan, Phl, M4 X 0.70 X 16, 4.8, 2-43
Screw, Pan, Phl, M4 X 0.70 X 16, Ss, 2-21, 3-3
Screw, Pan, Phl, M4 X 0.70 X 20, 4.8, 2-15, 2-91
Screw, Pan, Phl, M4 X 0.70 X 20, Ss, 2-91, 3-27
Screw, Pan, Phl, M5 X 0.80 X 12, Ss, 2-15, 2-89, 2-123, 3-19, 3-61
Screw, Pan, Phl, M5 X 0.80 X 16, 4.8, 2-15
Screw, Pan, Phl, M5 X 0.80 X 16, Tcut,Ss, 4-27
Screw, Pan, Phl, M5 X 0.80 X 20, Ss, 3-23, 3-33, 3-37, 3-39, 3-41, 3-42, 3-43
Screw, Pan, Phl, M5 X 0.80 X 45, 4.8, 3-51
Screw, Pan, Phl, M6 X 1.00 X 16, Ss, 2-103
Screw, Pan, Phl, M6 X 1.00 X 20, 4.8, 2-7
Screw, Pan, Phl, M6 X 1.00 X 35, Ss, 2-5
Screw, Set, Soc, 10-24 X 0.25, Nl, 2-89
Screw, Soc, .25-20 X 0.75, Al, 2-17
Screw, Soc, .38-16 X 1.50, Al, 2-23
Screw, Soc, .50-13 X 1.50, Al, 2-75
Screw, Soc, M12 X 1.75 X 55, 10.9, 2-23
Screw, Soc, M16 X 2.0 X 50, 12.9, 2-75
Screw, Soc, M4 X 0.70 X 16, 6-30
Screw, Soc, M6 X 1.00 X 25, 12.9, 2-25, 2-27, 2-29
Screw, Soc, M6 X 1.00 X 45, 12.9, 2-25, 2-27
Screw, Soc, M8 X 1.25 X 25, 12.9, 2-111, 2-115
Screw, Soc, M8 X 1.25 X 35, 12.9, 2-111, 2-115
Screw, Soc, M8 X 1.25 X 70, 12.9, 2-29
Screw, Valve, Steering, 4-13
Seal Kit [Buna], 4-25
Seal Kit [Vitron], 4-25
Seal Kit, Cartridge, 2-155, 4-15, 4-17, 4-19, 4-21
Seal Kit, Motor [Cl], 3-9, 4-11
Seal Kit, Motor, Hyd, Gear [Barns], 2-129
Seal Kit, Oil, 4-25
Seal Kit, Pump, Hyd, 4-7, 4-9
Seal Kit, Steering [Cl], 4-13
Seal Kit, Valve [Ehpr98], 4-17, 4-21
Seal Replmt Kit, 4-10
Seal, Afmkt, Bulb, 90, 0.50D, 02 Ft, 2-15
Seal, Afmkt, Bulb, Str, .50d F/11ga 03ft, 2-43
Seal, Afmkt, Bulb, Str, .50D F/11Ga 08Ft, 2-151
Seal, Afmkt, Bulb, Str, 0.58d 08ft, 2-65, 3-65
Seal, Afmkt, Bulb, Str, 1.0D F/11Ga 08Ft, 2-19
Seal, Afmkt, Ure, Adh, 0.38, 0.38w 02ft, 2-65
Seal, Bulb, Str, .50hi .50w 058.0l, Adh, 2-117
Seal, Cam Shaft, Front, 6-5
Seal, Cap, 6-5
Seal, Case, Oil, Rear, 6-3
Seal, Door, Dump, 2-93
Seal, Drive, Rear, Grease Cav, 2-75
Seal, Foam, 0.50, 2-9, 2-21
Seal, Foam, 1.18, 2-9, 2-21
Seal, Oil, 6-3, 6-12
Seal, Oil, Cshft, 5-5
Seal, Org, .069 X 03.06id, 2-149
Seal, Org, .072 X 00.35id #04, 4-15, 4-17
Seal, Org, .078 X 00.47id #06, 4-15, 4-17
Seal, Org, .078 X 00.47id 06, 4-19, 4-21
Seal, Org, Bolt, Cover, Camshaft Hsng, 5-11
Seal, Org, Cap, 5-3
Seal, Org, Cap, Fltr, Oil, 5-8
Seal, Org, Hsng, Oil Pump, 5-7
Seal, Org, Lpg, Mixer, 6-28
Seal, Org, Oil Pump, 5-7
Seal, Org, Press Switch / Drain Plug, 5-7, 5-8
Seal, Org, Sensor, Temp [Epr], 2-31, 2-33
Seal, Org, Water Pump, 5-7
Seal, Panl, Instmt, 2-9
Seal, Rbr, Clsd, 0.13, Instmt Panl, 2-13
Seal, Ring, Pipe, Suc, Oil Pump, 5-7
Seal, Seat, Valve, 5-3
Seal, Shaft, Drain Plug, 2-125
Seal, Shroud, Front, 2-19
Seal, Ure, 0.38, 0.75w 13.2l Adh, 2-133
Seal, Ure, 0.38, 0.75w 33.0l Adh, 2-133
Seal, Wire, 14/16ga [Wp / Mp280 Sealed], 4-24
Sealant, Tube, Ds, 5-8
Seat, 4-29
Seat (See Breakdowns), 2-15
Seat, Rotator, Valve, 5-3
Seat, Spring, Valve, 5-3
Seat, Spring, Valve, 0.333, 5-3
Seat, Suspension, W/1 Arm And Belt, 2-15
Seat, Valve, Exhaust, [+0.2mm], 5-3
Seat, Valve, Exhaust, [+0.4mm], 5-3
Seat, Valve, Exhaust, Std, 5-3
Seat, Valve, Intake, [+0.2mm], 5-3
Seat, Valve, Intake, [+0.4mm], 5-3
Seat, Valve, Intake, Std, 5-3
Seatbelt, 4-29
Seatbelt, Retractable [Deluxe Seat], 2-15
Send-Unit, Fuel [2007], 2-69
Send-Unit, Water, Temp,04npt[113oh/195d], 2-153
Sensor [T Map], 2-25, 2-27, 2-29
Sensor [Tmap], 6-25
Sensor, Camshaft [Mit], 6-25
Sensor, Exhaust, Tailpipe, 2-41, 2-63, 6-25
Sensor, Hyd, 3000 Psi (Replaced by 9007155), 2-155
Sensor, Level, Liq, 14vdc 01a .62-11, 2-117, 3-55
Sensor, Oxygen [Gm 1.6L/3.0L 2007], 2-41
Sensor, Position, Cshft, 2-23, 5-7
Sensor, Spd / Dir, 6-30vdc, 2-83
Sensor, Spd, Timing Wheel [3.0l], 6-25
Sensor, Temp [Epr], 2-31, 2-33
Sensor, Temp, Coolant, 2-23, 6-25
Sensor, Temp, Water [Rework For 1.6gm], 2-23
Shaft, 2-77
Shaft Wldt, Brake, 2-79
Shaft Wldt, Pedal, Brake, 2-79
Shaft, Arm , Rocker, 6-9
Shaft, Arm, Rocker, 6-9
Shaft, Brush, Idler, 2-95, 2-97
Shaft, Cap, Rocker, 6-9
Shaft, Left, Balancer, 6-11
Shaft, Motor, Hyd, 4-5
Shaft, Output, 4-10
Shaft, Output, Motor, Hyd [En], 4-11
Shaft, Pump, 4-7
Shaft, Pump, Water, 4-3
Shaft, Right, Balancer, 6-11
Shaft, Spring, Rocker, 6-9
Shaker Wldt, 2-89
Sheave Assy Kit, Repair, 2-39
Sheave, Cshft, 5-5
Sheave, Mach [Gm1.6l 2615rpm Fan], 3-65
Sheave, Mach [Gm1.6l], 2-39
Sheave, Mach [Mit 2615rpm Fan], 2-61
Shield, Heat, Gas/Lpg, Replmt, 2-41

Shield, Heat, Gas/Lpg, Replmt, CE (CE Only), 2-41
Shield, Heat, Gas/Lpg, Replmt, TJ (Japan Only), 2-41
Shield, Heat, Lower [Mit 20/24m], 6-16
Shield, Heat, Upper [Mit 20/24m], 6-16
Shield, Manifold, Exhaust, 5-9
Shield, Starter [1.6l], 2-23
Shield, Tray, Drip [Mit 2013], 2-63
Shim Kit, 4-7
Shim, Washer, 0.88d 0.51b .020, 2-129
Shim, Washer, 0.88d 0.51b .060, 2-129
Shock Absorber, 2.3 Strk, 2-83
Shoe Set, Brake [1 Set=1pkg=2 Shoes], 2-77
Shoe, Plstc, Sqge, 14.0, 3-49
Shrd Wldt,Fan,G/Lp, Replmt [CE] (CE Only), 2-45
Shrd Wldt,Fan,G/Lp, Replmt [M20/M30/T20], 2-45, 2-65
Shrd Wldt,Fan,G/Lp, Replmt [TJ] (Japan Only), 2-45, 2-65
Shroud Wldt, Fan, 16.25d [Side X Side], 2-45
Shroud Wldt, Fan, Gas/Lp, Replmt, 2-43
Shroud Wldt, Fan, Gas/Lp, Replmt, Ce (CE Only), 2-43
Shroud Wldt, Fan, Gas/Lp, Replmt, TJ (Japan Only), 2-43
Shroud Wldt, Fan, Venturi, 16.4d, 2-43
Shroud, Eng, 2-21
Shroud, Fan, 2-65, 3-65
Shroud, Front, 2-19
Shroud, Rh, 2-15
Side Door Inner Skirt, 1-1
Side Door Outer Skirt, 1-1
Skirt, Debris, Radiator, 2-43, 2-45
Skirt, Eng Fan, Gas / Lp, 2-65
Skirt, Neo, .06, 03.35w 12.90l, 04/ Hole, 2-101
Skirt, Neo, .06, 06.38w 48.00l, 06/ Hole, 2-101
Skirt, Neo, .06, 06.85w 27.95l, 08/ Hole, 2-109, 2-113
Skirt, Neo, .06, 08.40w 58.50l, 12/ Hole, 2-101
Skirt, Neo, .06, 12.00w 53.50l, 10/ Hole, 2-101
Skirt, Neo, .13, 08.25w 13.98l, 02/ Hole, 2-101
Skirt, Neo, .18, 10.37w 27.95l, 12/ H&S, 2-109, 2-113
Skirt, Rbr, .37, 04.50w 48.00l, 06/ Hole, 2-101
Sleeve, 0.31b 0.50d 0.3l, Ss, 2-111, 2-115, 2-125
Sleeve, 0.49b 0.68d 1.2l [304ss], 2-111, 2-115, 3-55
Sleeve, Dashpo, Pump, Hyd, Gear, 4-5
Sleeve, Nyl, #37 05.0l, 2-75
Sleeve, Nyl, 2.38id 25.0l, 2-75
Sleeve, P/M, 0.31b 0.50d 0.3l [430ss], 2-121, 2-127
Sleeve, P/M, 0.31b 0.50d 0.7l [430ss], 2-105, 2-121, 2-127
Sleeve, P/M, 0.31b 0.50d 0.9l [430ss], 2-41, 2-63
Sleeve, P/M, 0.34b 0.63d 0.6l, Bnz, 2-107
Sleeve, P/M, 0.34b 0.63d 1.2l, Bnz, 2-105
Sleeve, P/M, 0.37b 0.50d 0.6l [430ss], 3-11
Sleeve, P/M, 0.47b 0.75d 0.5l [430ss], 2-99
Sleeve, Pump, Water, 4-3
Sleeve, Rbr, 3.50b 3.58d 1.8l, 3-5
Solenoid, #10, 12vdc, 4-15, 4-17, 4-19, 4-21
Solenoid, #8, 12vdc, 4-15, 4-17, 4-19, 4-21
Solenoid, 12v, Valve, Hyd [Cec], 4-22
Spacer, 3-7, 3-9
Spacer Plate, 4-10
Spacer, Alternator [Mit 2.0/2.4l], 6-20
Spacer, Belt, Balancer, Train, 6-11
Spacer, Coil, #8, 4-15, 4-17
Spacer, Crankfshaft, 2-61
Spacer, Fan, Taper [2007], 2-39
Spacer, Fan, Taper [Mit 2013], 2-61
Spacer, Hub, Keyed, 3-7, 3-9
Spacer, Pad, Rbr, 2-103
Spacer, Plstc, Nyl, 2-15
Spacer, Pump, Water, 2-61
Spacer, Ring, Throttle [Mit 40mm], 6-28
Spacer, Rnd, .38b .88d .38l (CE ONLY), 2-15
Spacer, Sqge, Side Brush, Rbr, 3-9
Spacer, Strap, Adj, Alternator, 2-39
Spacer, Valve, Steering, 4-13
Sparkplug, 5-12
Sparkplug [Gm], 1-1
Sparkplug [Gm, 1pick=1plug], 1-1
Spool, Pilot, Dual, Hyd, 4-15, 4-17
Spool, Pilot, Hyd, 4-15, 4-17, 4-19, 4-21
Spring, 2-77, 4-5
Spring Kit, Scu [Cl], 4-13
Spring, 3/4 X 16 [Gm1.6L 2010 Lpg], 2-33
Spring, Cmpr, 0.72od .06wir 02.3l, 2-17
Spring, Cmpr, 0.90od .04wir 02.0l, 2-105
Spring, Dsl, 1.00od 0.50id 1.70l, 2-107
Spring, Extn, 0.75od X 0.09wir, 2.5l, 2-111, 2-115
Spring, Extn, 0.75od X 0.12wir, 4.3l, 2-83
Spring, Extn, 0.75od 0.09wir 02.5l, 2-85
Spring, Extn, 0.88od 0.14wir 09.0l, 2-103
Spring, Extn, 2.00od 0.25wir 07.5l, 2-99
Spring, Flat, .08, 4.50w X 07.0l, 2-103
Spring, Flat, Retainer, Angled Screen, 2-87
Spring, Motor, Hyd, 4-5
Spring, Tors, 0.75id .06wir 02.8coil, 2-79
Spring, Tors, 1.13id .12wir 2.3coil, Rh, 2-79
Spring, Valve, 5-3
Spring, Valve, Relief, Oil Press, 5-7
Spring, Wir, 0.08d, Parking Brake, 2-79
Spring, Wir, 0.16d, Brush Retaining, 2-5
Sprocket Assy, Cshft, 6-9
Sprocket, Camshaft, 5-11, 6-9
Sprocket, Crankshaft, 5-11
Sprocket, Cshft, 6-11
Sprocket, Pump, Oil, 6-9
Sprocket, Shaft, Balancer, 6-11
Squeegee Assy, Sba, Linatex, 3-7
Squeegee Assy, Sba, Ure, 3-7
Squeegee Kit, Rear, Replmt [M30], 2-105
Squeegee Wldt, Rear, 2-105
Stand-Off, Hex, M8 X M8, Metal, 2-49, 2-51
Starter, 12vdc [Delco] (Mar. 2006 and Newer), 5-5
Starter, Motor [Mit 2.0/2.4l], 6-20
Steer-Control, Hyd05, 06.1 2030, 4-13
Steer-Control, Hyd05, 06.1 2030 (See Breakdowns), 2-17
Stem, Valve, Hyd, 4-15, 4-17, 4-19, 4-21
Stem, Valve, Hyd [4w2p], 4-15, 4-17, 4-19, 4-21
Stop, Rotation, 2-107
Strainer, Hyd, 025gpm 100mesh 03psi, 1-1, 2-153
Strainer, Soltn, 20mesh, Cyl, 3.5d 09.5l, 3-5
Strap, Adj, Alternator, 2-39
Strap, Door, Dump, 2-93
Strap, Mtg, Motor, .12 4.00w, 2-89
Strap, Mtg, Tank, Lpg, 2-71
Strap, Mtg, Tank, Lpg, Hinge, 2-71
Strap, Rbr, Tie-Down, 19.0l, 2/ Hook, 2-73
Strap, Retaining, Hose, 2-121, 2-127
Strap, Sppt, 2-83
Strap, Static, W/Grommet, .19 1.1w 25.0l, 2-101
Strap, Tank, Gas, 2-69
Strip, Flap, Recirculation, 2-101
Strip, Mtg, Seal, 2-19
Strip, Non Slip, 0.50w 06.0l, 2-105
Strip, Rbr, 0.06 01.00w 04.0l, 2-89
Strip, Rbr, 0.06 03.54w 03.5l [Neo/60], 3-27
Strip, Rbr, 0.06 04.00w 05.0l [Neo/60], 2-89
Stud, 6-5
Stud, .31-18 2.75l M8 X 1.25, Ss, 2-105
Stud, Ball, .39d .31-16, Gasspring, 2-15
Stud, M05-0.8, 2-29, 6-30
Stud, M10 X 1.50 [35], 2-39, 2-41
Stud, M10-1.25 X 50, Full Thrd [Mit], 6-25
Stud, M8-1.25 X 30 [Mit Double End], 6-15
Stud, M8-1.25 X 35 [Mit Double End], 6-15
Stud, M8-1.25 X 40 [Mit], 6-16
Stud, M8-1.25 X 50 Full Thrd [Mit], 6-15
Stud, Manifold, Intake, M8 X 28, 6-16
Stud, Manifold, M8 X 28, 5-9
Stud, Manifold, M8 X 96, 5-9
Stud, Starter, M08 X 1.25, 5-5
Stud, Wheel, .50-20 X 1.50l, 0.370th, 2-75
Switch Assy, Press, 13.0, 17.5l Tube, 2-125
Switch Assy, Press, Dbl, 17.5l, 3-5

Switch Assy, Press, Dbl, 26.2l, 3-5
Switch Kit, Pump, Repair,, 4-24
Switch, Ignition [Ku], 2-13
Switch, Indicator, Oil Press, 2-23, 5-7
Switch, Indicator, Oil Press [2010], 2-23, 5-7
Switch, Press, 0006psi Dpdt, 2-23
Switch, Press, 0008psi Spdt, 2-91
Switch, Press, 0070psi Spst Nc 12vdc 08a, 2-71
Switch, Press, 50 Psi, Pm02, 3-29
Switch, Press, Adj [4-16 In Wtr], 2-91
Switch, Press, Hyd, 18-24Psi, Spst, No (CE Only), 2-153
Switch, Pressure, Oil, 6-12
Switch, Rocker, Dpdt, Mom / Off / Mom, 2-13
Switch, Rocker, Dpdt, On / None / On, 3-51
Switch, Rocker, Dpdt, On / Off / On, 2-13
Switch, Rocker, Prgrsv, 3-53
Switch, Rocker, Spst, Mom, 3-27
Switch, Seat, 4-29
Switch, Seat, No [Delta 6440-04], 2-15
Switch, Snap, 15a No, Rlr, 2-85
Switch, Temp [160f], 2-89
Switch, Temp, Sealed, Nc, 2-89

T

Taillight, 12vdc, 2-91
Tank, Coolant, 03.30w 4.7hi 04.7l,1liter, 2-47
Tank, Coolant, 03.6W 04.1HI 05.5L,1Liter, 2-47, 2-67
Tank, Detgt, Trimmed, 3-5
Tank, Fuel, 11.2gal, Gas, Replmt [2007], 2-69
Tank, Lpg, 33lb, W/ Gauge [Empty, Liq], 2-71
Tank, Recvy, 2-125
Tank, Soltn [M30], 2-117
Tape, Warning, Left, Blk/Yel [33Mtr] (CE Only), 2-208
Tape, Warning, Rh, Blk/Yel [33Mtr] (CE Only), 2-208
Tensioner, 6-9
Tensioner, Timing, Belt, 6-11
Terminal, Bullet, Mal, .157d, 12ga, 3-39, 3-41, 3-42, 3-43
Terminal, Fem, Mp280, Sealed, 18-16ga, 4-24
Terminal, Tab, .25 .19h .84l, 2-23
Thermostat Kit, Coolant, Replmt [Mitsub], 6-22
Thermostat, W/ Hsng And Seal, 5-3
Thrust Bearing, 4-10
Thurst, Case, 6-5
Tie, Cable, 6.0l, 1.25d Max, 3-33, 3-42, 3-43
Tie, Cable, Nyl, 07.3l .19w 1.8 Max D, 2-13, 2-45, 2-75, 2-97, 3-29, 3-42, 3-43, 3-53
Tie, Cable, Nyl, 14.5l .30w 4.0 Max D, 4-27
Tie, Cable, Nyl, 15.3l . W 4.5 Max D, 2-89, 3-23, 3-29
Tire Assy, Solid, 18.0 X 5.0, Idler (Standard), 2-77
Tire Assy, Solid, 18.0 X 5.0,Hi Traction (Option), 2-77
Tire Assy, Solid, 18.0X5.0, Non-Marking (Option), 2-77
Tire, Drive, Scrbr, Non-Skid, 18.0X6.0, 2-75
Tire, Drive, Scrbr, Pu, Grey, 18.0X6.0 (Optional Polyurethane), 2-75
Tire, Idler, Scrbr, Pu, Grey, 18.0X5.0 (Polyurethane), 2-77
Tower Wldt, Lift, Lh, Replmt [M30], 2-7
Tower Wldt, Lift, Lh, Replmt, Ce (CE Only), 2-7
Tower Wldt, Lift, Lh, Replmt, TJ (Japan Only), 2-7
Tower Wldt, Lift, Rh, Replmt [M30], 2-7
Tower Wldt, Lift, Rh, Replmt, CE (CE Only), 2-7
Tower Wldt, Lift, Rh, Replmt, TJ (Japan Only), 2-7
Track Assy, Slide, 4-29
Transport Kit, Ci [M20/M30}, 3-61
Tray Wldt, Fuel, 2-69
Tray Wldt, Lpg, 2-71
Tray, Perma-Filter, 2-89
Tread, Non-Skid, 01.9w 08.0l, 2-7
Tread, Non-Skid, 02.2w 11.5l, 3-13
Tread, Non-Skid, 03.0w 11.6l, 2-7, 2-9, 2-81
Tube [Pcv], 5-3
Tube Assy, Plug, Drain, 2-125
Tube Kit, Hyd, Case Drain [M30], 2-97
Tube Kit, Tank, Recvy, Replmt, 2-127
Tube Kit, Tank, Soltn, Replmt, 2-121
Tube Wldt, Arm, Safety, 2-85
Tube Wldt, Leg, Ohg, Lh, Pntd, 3-45
Tube Wldt, Leg, Ohg, Rh, Pntd, 3-45
Tube Wldt, Plug, Drain, 2-125
Tube Wldt, Tee, 2-35, 2-37
Tube Wldt, Tee [Mit 2013], 2-57, 2-59
Tube Wldt, Torque, 2-99
Tube, 0.32id 0.50od 00.4l, Ss, 2-121, 2-127
Tube, 0.77id 1.75od 00.7l, Stl, Pntd, 2-75
Tube, 00.38d 00.26b 00.3l Stl Plt, 2-81
Tube, 00.50d 00.38b 00.6l Stl, 2-83
Tube, 2.90Id 3.00OD 02.4L, Ss, 2-121, 2-127
Tube, Acrylic, Clr, 3.25id 3.50od 01.0l, 2-127
Tube, Bleed, Air, .62od 2.2l .12npt, Alm, 2-25, 2-31
Tube, Coolant, 1.3d, Lower, 2-47
Tube, Coolant, 1.3d, Lower [Mit 2013], 2-67
Tube, Cooling, Line [Mit], 6-23, 6-26
Tube, Distribution, Water, 45.0l, 2-123
Tube, Ds, 5-8
Tube, Exhaust, Flng, 1.5d, 2-41
Tube, Exhaust, Flng, 1.5d [M20/T20 2007], 2-63
Tube, Hyd, 06, Sqge Lift, 2-151
Tube, Hyd, 08 Jf08/Jf08, 2-95
Tube, Hyd, Brush Return, W/ Cd [M30], 2-97
Tube, Hyd, Main Return, 2-151
Tube, Hyd, Main Return [G/Lp Mit2013], 2-151
Tube, Hyd, Rear Sqge [M20], 2-151
Tube, Pump, Water, 6-22
Tube, Rnd, 1.75d 0.77b 01.1l, Stl, Pntd, 2-75
Tube, Vacuum, 2-91
Tube, Vinyl, Pump, Water, 4-3
Tube, Wand, Vacuum, Metal, 3-49
Tube, Water, Line [Mit], 6-22
Tubing Connctr.Kit, Gorman Pmp, 4-23

U

Upper Hsg Kit, Pump, Repair,, 4-24
Urethane Front Squeegee, 1-2
Urethane Rear Squeegee, 1-2
Urethane Side Brush Squeegee, 1-2
Urethane Side Squeegee, 1-2

V

Valve Assy [Proportional], 4-17, 4-21
Valve Assy, Relief [Cl], 4-13
Valve Assy, Water, Solenoid , 12vdc, 2-123
Valve Assy, Water, Solenoid, 12vdc, 3-13, 3-33
Valve Kit, 4-25
Valve Kit, Poppet, Gorman Rupp, 4-23
Valve Stem, N.O.Valve, Hyd, 4-22
Valve, By-Pass, Oil Fltr, 5-8
Valve, Check, 4-15, 4-17, 4-19, 4-21
Valve, Check, 0002psi [FaST Ii+], 4-30
Valve, Check, 0005psi [FaST Ii+], 4-30
Valve, Check, 0005psi Bm06/Bm08, 3-19
Valve, Check, 0005psi Pm04/Bm06, 3-29
Valve, Check, 2gpm .5psi Bm08/Bm08, 3-33
Valve, Check, Pump, Water, 4-3
Valve, Cntrl, Hyd, Solenoid, 03/16gpm, 4-19, 4-21
Valve, Cntrl, Hyd, Solenoid, 03/16gpm (See Breakdowns), 3-15
Valve, Cntrl, Hyd, Solenoid, 12vdc 10gpm, 4-17
Valve, Cntrl, Hyd, Solenoid, 12vdc 10gpm (See Breakdowns), 2-155
Valve, Cntrl, Solenoid, 4-15, 4-17
Valve, Exhaust, 5-3, 6-9
Valve, Gasket, Pcv, 6-4
Valve, Hyd Cartridge 10no/-0, 4-22

Valve, Hyd, Check, 5000psi Jm08/Om08, 3-15
Valve, Hyd, Press Washer, 3-57, 3-59
Valve, Hyd, Solenoid, 12vdc, 4-15
Valve, Hyd, Solenoid, 12vdc (See Breakdowns), 2-155
Valve, Inlet, 6-9
Valve, Intake, 5-3
Valve, Lock Off, 2-31
Valve, Lock Off [Gm 1.6L 2010], 2-33
Valve, Lpg, Press Relief [Rego], 2-71
Valve, Motor, Hyd, 4-5
Valve, Needle, 3-55
Valve, Pcv, 6-4
Valve, Relief, 4-15, 4-17, 4-19, 4-21
Valve, Relief, 1100 Psi, 2-155
Valve, Relief, 3000 Psi, 4-7
Valve, Relief, 4000 Psi, 4-7
Valve, Relief, Oil Press, 5-7
Valve, Seal, Stem, 6-9
Valve, Shutoff, 3-51
Valve, Solenoid, 12vdc, Water Flow, 3-23
Valve, Spring, 6-9
Valve, Spring, Lock, 6-9
Valve, Spring, Retainer, 6-9
Valve, Spring, Seat, 6-9
Valve, Stem, No, 4-15, 4-17, 4-19, 4-21
Valve, Vent, Air, Float Type, 3-29
Valve, Water, Solenoid, 12vdc 6.0mm Pf04, 3-19
Valve, Water, Solenoid, 12vdc Pf08/Pf08, 3-3

W

Wand Kit, Vacuum, Sqge, Ci [M30], 3-49
Wand, Clean- Out, 3-51
Wand, Str, Ss, 28l, 3-53
Washer, 6-9, 6-21
Washer, 1/4 Flat [Mit], 6-27
Washer, Belleville, .31, 2-83
Washer, Belt, Balancer, Train, 6-11
Washer, Bolt, 6-7
Washer, Flat 3/8, Sae, 6-17
Washer, Flat, .781b 1.63od .16, Stl, Blk, 2-75
Washer, Flat, #10 Ss, 2-83
Washer, Flat, 0.25 Std, 2-81, 2-83
Washer, Flat, 0.25, Fendr, 2-43, 2-45, 2-65, 2-101, 2-133
Washer, Flat, 0.25, Sae, 2-15, 2-17, 2-25, 2-27, 2-29, 2-41, 2-63, 2-69, 2-71, 2-85, 2-133, 3-27, 3-47, 3-57, 3-59, 3-65
Washer, Flat, 0.25, Std, 2-9, 2-19, 2-23, 2-25, 2-27, 2-29, 2-31, 2-43, 2-45, 2-53, 2-55, 2-63, 2-65, 2-79
Washer, Flat, 0.27b 0.69d .05, Ss, 2-5, 2-43, 2-45, 2-89, 2-93, 2-101, 2-123, 2-125, 3-19, 3-27, 3-47, 3-61
Washer, Flat, 0.31 Sae, 2-83, 2-111, 2-115
Washer, Flat, 0.31, Hardened, 2-39
Washer, Flat, 0.31, Sae, 2-9, 2-15, 2-21, 2-39, 2-61, 2-63, 2-121, 2-127
Washer, Flat, 0.31, Ss, 2-111, 2-115
Washer, Flat, 0.31, Std, 2-9, 2-15, 2-17, 2-19, 2-35, 2-37, 2-39, 2-41, 2-43, 2-45, 2-47, 2-57, 2-59, 2-61, 2-65, 2-67, 2-69, 2-71, 2-75, 2-79, 2-95, 2-97, 2-99, 2-101, 2-121, 2-125, 2-127, 2-151, 3-11, 3-15, 3-45, 3-61, 3-65
Washer, Flat, 0.31, Std (CE Only), 2-43, 2-45
Washer, Flat, 0.32b 1.00d .12, Ss, 2-9, 2-15, 2-19, 2-21, 2-61, 2-87, 2-93, 2-118, 2-121, 2-127, 2-131, 2-155, 3-5, 3-27, 3-29, 3-37, 3-39, 3-41, 3-51
Washer, Flat, 0.38 Sae, 2-49, 2-51, 2-83
Washer, Flat, 0.38 Std, 2-83, 3-9, 3-45
Washer, Flat, 0.38, Hardened, 2-23, 2-31, 2-33
Washer, Flat, 0.38, Sae, 2-23, 2-39, 2-41, 2-107, 2-133, 2-149
Washer, Flat, 0.38, Std, 2-7, 2-15, 2-41, 2-43, 2-45, 2-63, 2-65, 2-71, 3-7, 3-63
Washer, Flat, 0.38b 0.88d .08, Ss, 2-41, 2-47, 2-63, 2-89, 2-93, 2-101, 2-103, 2-105, 2-107, 2-121, 2-127, 2-131, 3-7, 3-11, 3-55
Washer, Flat, 0.38b 1.25d .12, Neo, 2-87, 2-93
Washer, Flat, 0.40b 1.12d .12, Ss, 2-39, 2-43, 2-45, 2-65, 2-85, 2-89, 2-93, 2-107, 2-129, 2-133, 3-45
Washer, Flat, 0.41b 1.25d .12, Pye, 2-15
Washer, Flat, 0.44b 1.00d .08, Ss, 2-7, 2-103, 3-13, 3-55
Washer, Flat, 0.50 Sae, 2-49, 2-51
Washer, Flat, 0.50 Std, 2-49, 2-51
Washer, Flat, 0.50, Sae, 2-17, 2-23, 2-43, 2-77, 3-11, 3-63
Washer, Flat, 0.50, Std, 2-23
Washer, Flat, 0.53b 1.88d .12, Stl, Pl, 2-9, 2-23, 2-49, 2-51, 2-103, 2-105
Washer, Flat, 0.56b 1.38d .11, Ss, 2-99, 2-103, 2-111, 2-115
Washer, Flat, 0.62, Sae, 2-19
Washer, Flat, 0.66b 1.00d .12, Rbr, 3-3, 3-51
Washer, Flat, 0.69b 1.19d .06, Stl, Pl, 2-107
Washer, Flat, 0.75 Sae, 2-75
Washer, Flat, 0.78b 1.75d .18, Ss, 2-125
Washer, Flat, 0.79b 1.18d .06, Nyl, 2-121, 2-127
Washer, Flat, 0.81b 1.06d .06, Stl, 2-43, 2-45, 2-65
Washer, Flat, 06, 2-15, 2-43, 2-89, 3-49
Washer, Flat, 08, 3-27
Washer, Flat, 08, Ss, 4-27
Washer, Flat, 1.00, Sae, 2-77
Washer, Flat, 1.15b 1.75d .08, Stl, 2-13
Washer, Flat, 1.26b 1.88d .13, Stl, 3-13
Washer, flat, 1.26B 1.88D .13, Stl, Pl, 2-7, 2-91
Washer, Flat, 1.39b 2.12d .13, Stl, 2-75
Washer, Flat, 10, 2-15, 2-39, 2-73, 2-85, 3-27, 3-37, 3-39, 3-41, 3-42, 3-43, 3-51
Washer, Flat, 10, Ss, 3-3, 3-19, 3-47, 3-51, 3-53, 3-63
Washer, Flat, 2.16b 3.50d .16, Felt, 2-75
Washer, Flat, Belleville, .25, 2-111, 2-115
Washer, Flat, Belleville, .31, 2-61, 2-121, 2-127
Washer, Flat, Belleville, .38, 2-41, 2-83, 2-85, 2-103, 2-111, 2-115
Washer, Flat, Belleville, .50, 2-111, 2-115, 2-131
Washer, Flat, Belleville, M10, 2-87
Washer, Flat, Pump, Hyd, 4-7
Washer, Lock, 0.38, 6-17
Washer, Lock, Int- Ext, 0.31, 2-101
Washer, Lock, Int- Ext, 0.38, 2-39
Washer, Lock, Int, 0.25, 3-27
Washer, Lock, Int, 0.25, Ss, 3-55
Washer, Lock, Int, 0.38, 2-39
Washer, Lock, Int, 06, 2-89
Washer, Lock, Int, 08, Ss, 2-91, 4-27
Washer, Lock, M12 [Mit], 6-18
Washer, Lock, M6 [Mit], 6-28
Washer, Lock, M8 [Mit], 6-9, 6-21
Washer, Pump, Hyd [En], 4-7
Washer, Rbr, 4-3
Washer, Sheave, Cshft, 5-5
Washer, Shld, Nyl [8- 32], 2-13
Washer, Special, 6-10
Washer, Spring, 6-13
Washer, Sprkt, Camshaft, 5-11
Washer, Star, M10 [Mit], 6-25
Washer, Strainer, 6-7
Washer, Thrust, 0.34b 1.50d .06, 2-121, 2-127
Washer, Thrust, 0.61b 1.25d .06, Fgl, 2-111, 2-115
Washer, Thrust, 0.61b 1.25d .06, Fgl, 2-107, 2-109, 2-113, 3-7
Washer, Thrust, 1.00b 1.75d 0.13, Fbr, 3-11
Weight, Eccentric, 2-89
Wheel, 03.0d 1.38w 0.50b, 1-1, 2-107
Wheel, 04.0d 0.89w 0.64b, 2-105
Wheel, 06.0d 2.00w 1.19b, Gray Rbr, 2-7, 2-91, 3-13
Wheel, Steering, 14.3d 0.81b 36tooth, 2-17
Wire Set, Sparkplug [1.6l], 5-12
Wire Set, Sparkplug [Set Of 4, 1.6l], 1-1
Wire, 10ga 16.0l Blk .25ring /.38ring, 2-39
Wire, Tie [W/.25” Fir Tree Clip], 2-7