T260

Walk-behind Floor Scrubber

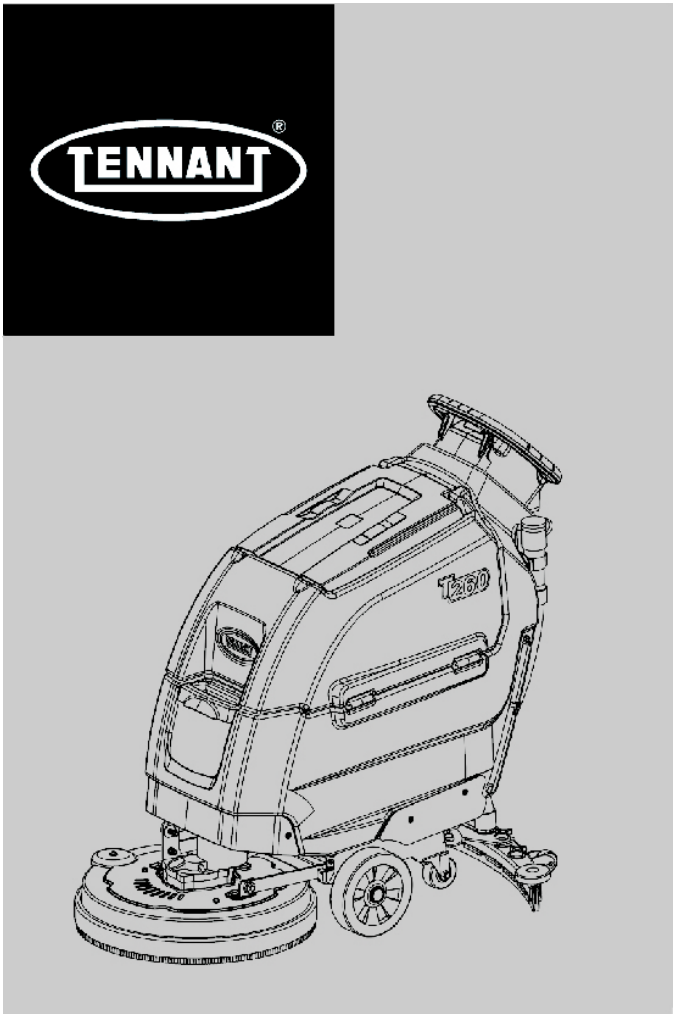

Parts Manual

Model Part No.:
TN8001004- SCRUBBER [T260 70CM, NA]

Tennant*True*® Parts

North America

To view, print or download
the parts manual, visit:

www.tennantco.com/manuals

9022826
Rev. 01 (01-2024)

STANDARD PARTS

WEAR PARTS 2
SERVICE PARTS 3
BRUSHES / PAD DRIVER AND PADS, 50 CM / 20 IN DISK 4
BATTERY AND CHARGER GROUP 5
MAIN FRAME GROUP 6
ELECTRICAL GROUP 8
CONTROL PANEL GROUP 10
WHEEL ASSEMBLY 12
MOTOR ASSEMBLY 14
SOLUTION TANK GROUP 16
SCRUB HEAD GROUP 18
HOSE GROUP 20
RECOVERY TANK GROUP 22
SQUEEGEE ADJUSTMENT GROUP 24
SQUEEGEE LIFT GROUP 26
SQUEEGEE ASSEMBLY, 50 CM / 20 IN 28

WEAR PARTS

	Ref.	Part No.	Mfr. Date	Description	Qty.
∇		9015731	( )	Blade Kit, 500mm, Linatex (Standard)	1
▲		1203953	( )	Blade, Sqge, Rear, 836l, Linatex[500mm] (Standard)	1
▲		1203954	( )	Blade, Sqge, Front, 788l, Linatex[500mm] (Standard)	1
∇		9015732	( )	Blade Kit, 500mm, Urethane (Optional)	1
▲		1215609	( )	Blade, Sqge, Rear, 836l, Urethane[500mm] (Optional)	1
▲		1215611	( )	Blade, Sqge, Front, 788l, Urethane[500mm (Optional)	1
∇		9015730	( )	Blade Kit, 500mm, Gum (Optional)	1
▲		1215610	( )	Blade, Sqge, Rear, 836l, Gum[500mm] (Optional)	1
▲		1215612	( )	Blade, Sqge, Front, 788l, Gum[500mm] (Optional)	1
		CN5006244	( )	Brush Assy, Disc, Scb, 50cm	1
		CN5006245	( )	Driver Assy, Pad, 50cm, 3 Lug	1
		1243338	( )	Pad, Polish, 20.0d, White [1pick=1ctn]	1
		1243339	( )	Pad, Buff, 20.0d, Red [1pick=1ctn]	1
		1243340	( )	Pad, Scb, 20.0d, Blu [1pick=1ctn]	1
		1243566	( )	Pad, Stripping, 20.0d, Brn [1pick=1ctn]	1
		1243661	( )	Pad, Strip, 20.0d Blk[Hi Prod1pick=1ctn]	1
		1243670	( )	Pad, Surf Prep, 20.0d Maroon[1pick=1ctn]	1

SERVICE PARTS

	Ref.	Part No.	Mfr. Date	Description	Qty.
∇		CN5002458	( )	Fan, Vacuum	1
▲		CN5001828	( )	Brush, Motor	1
∇		CN5005651	( )	Motor, Ele	1
▲		CN5001828	( )	Brush, Motor	1
		1010560	( )	Wheel, Bmpr, 80d X 25w, Non- Marking	1
		CN5001643	( )	Fuse, 5a	1
		CN5001647	( )	Fuse, 25a	1
		CN5001644	( )	Fuse, 30a	1
		CN5006221	( )	Cap, Hub, Dust, 28.5mmd 10.8mml	1
		CN5006220	( )	Cap, Tank, Soltn	1
		CN5002145	( )	Float, Level, Red, 6mm	1
		CN5004320	( )	Hose, Silicone, 13mmid X 19mmod	1
		CN5004321	( )	Hose, Silicone, 15mmid X 21mmod	1
		CN5002865	( )	Hose, Silicone, 8mmid X 12mmod	1
		CN5002836	( )	Hose, Sqge, Rear, 38mm Dia	1
		CN5006234	( )	Tray, Debris, Tank, Soltn	1
		CN5005711	( )	Tray, Debris, Tank, Recvy	1
		CN5004741	( )	Filter, Mesh	1
		CN4000673	( )	Seal, Washer, 42.0mmd 22.0mb 11mml	1
		CN5003686	( )	Gasket	1
		CN5006246	( )	Seal, Strip, 420mm X 18mm X 7mm	1
		CN5006241	( )	Cover, Skirt, Brush	1
		CN5004736	( )	Valve, Ball	1
		CN4000699	( )	Caster, Swivel	1
		630477	( )	Wheel, Pyu, 02.0d 0.38w, Gray	1
		CN5006078	( )	Shaft Wldt, Axle	1
		CN5002310	( )	Wheel, 200.0mmd 50.0mmw 42.0mmb	1
		1251238	( )	Battery, Agm, 12vdc 0135ah, Cn	1
		CN5006264	( )	Charger, 24v, 15ah	1
		1069835	( )	Cord, Power, Chrgr, 120vac [S8- Us/Jp]	1
		CN5003089	( )	Sensor, Level, Liq	1
		CN5001636	( )	Fuse,100a	1
		CN5002833	( )	Hose Assy, Drain, 38mmd 990mml	1
		CN5005723	( )	Cover, Debris, Tank, Recvy	1

BRUSHES / PAD DRIVER AND PADS, 50 CM / 20 IN DISK

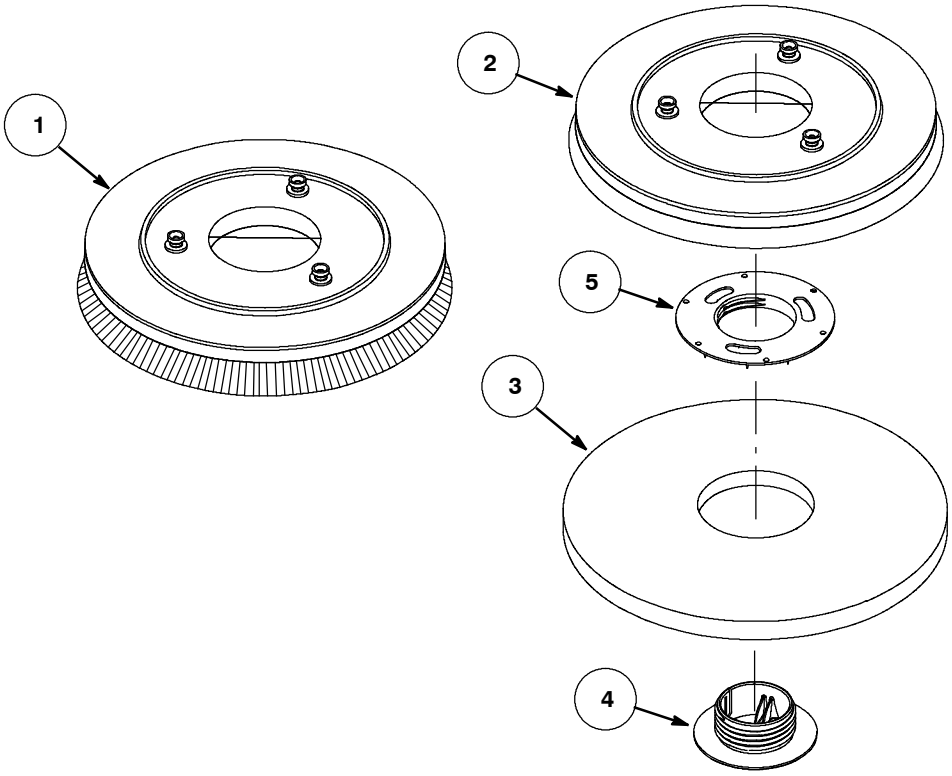

Ref.	Part No.	Mfr. Date	Description	Qty.
1	CN5006244	( )	Brush Assy, Disc, Scb, 50cm	1
2	CN5006245	( )	Driver Assy, Pad, 50cm, 3 Lug	1
3	1243338	( )	Pad, Polish, 20.0d, White [1pick=1ctn]	1
3	1243339	( )	Pad, Buff, 20.0d, Red [1pick=1ctn]	1
3	1243340	( )	Pad, Scb, 20.0d, Blu [1pick=1ctn]	1
3	1243566	( )	Pad, Stripping, 20.0d, Brn [1pick=1ctn]	1
3	1243661	( )	Pad, Strip, 20.0d Blk[Hi Prod1pick=1ctn]	1
3	1243670	( )	Pad, Surf Prep, 20.0d Maroon[1pick=1ctn]	1
4	MPVR04088	( )	Lock, Center, Pad Driver	1
5	SPPV00489	( )	Flange, Center Lock, Pad HolderVac	1

BATTERY AND CHARGER GROUP

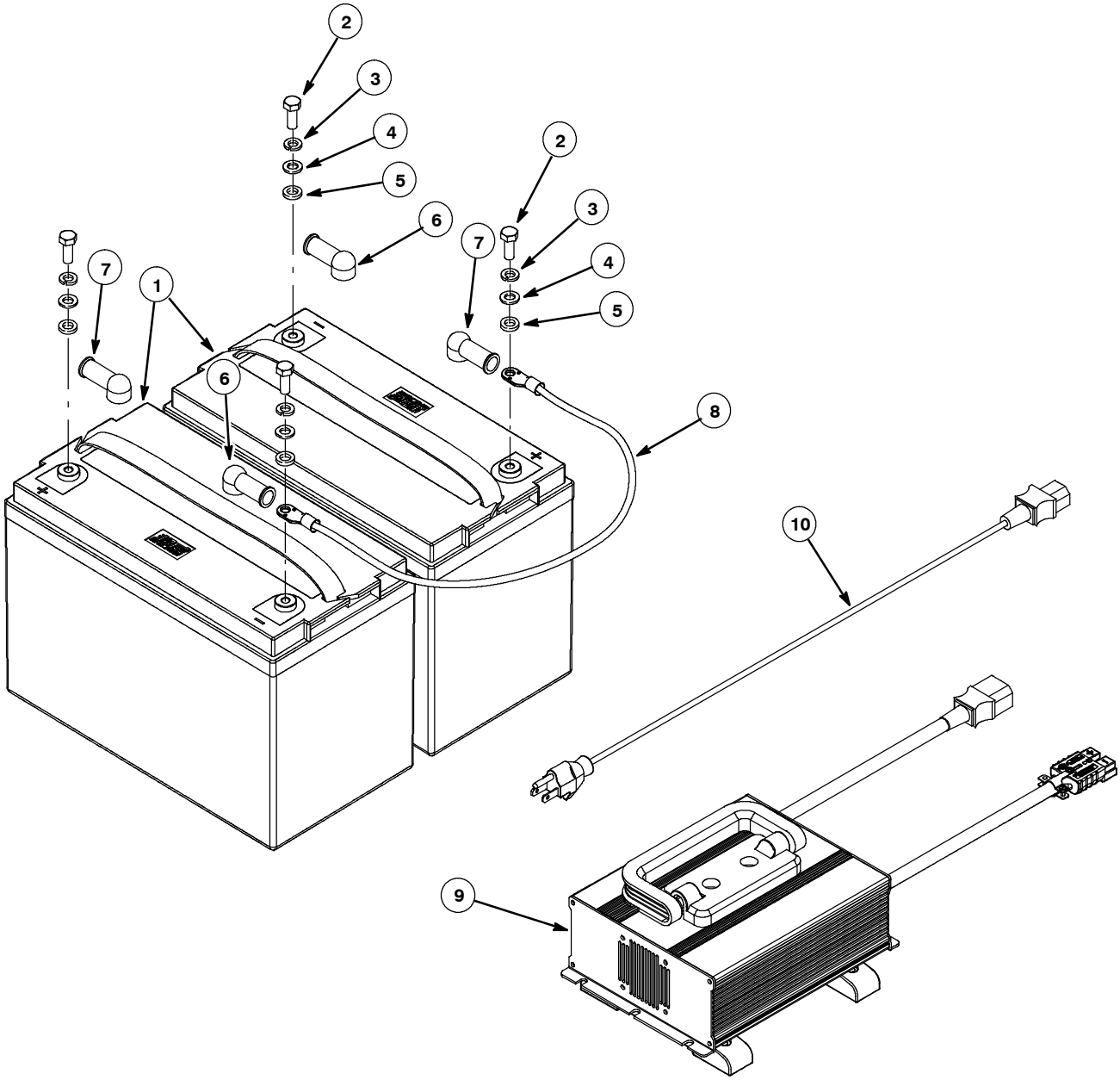

	Ref.	Part No.	Mfr. Date	Description	Qty.
∇	1	1251238	( )	Battery, Agm, 12vdc 0135ah, Cn	2
▲	2	09740	( )	Screw, Hex, M8 X 1.25 X 20, Ss	2
▲	3	CN4000406	( )	Washer, M8	2
▲	4	CN4000373	( )	Washer, M8	2
	5	CN5000789	( )	Gm50b Battery Booster Pad - D	4
	6	CN5002221	( )	Gm50b Battery Pile Head Cover (Black)	2
	7	CN5002220	( )	Gm50b Battery Pile Head Cover (Red)	2
	8	CN5003048	( )	R50b Harness 13	1
	9	CN5006264	( )	Charger, 24v, 15ah	1
	10	1069835	( )	Cord, Power, Chrgr, 120vac [S8- Us/Jp]	1

∇ ASSEMBLY

▲ INCLUDED IN ASSEMBLY

MAIN FRAME GROUP

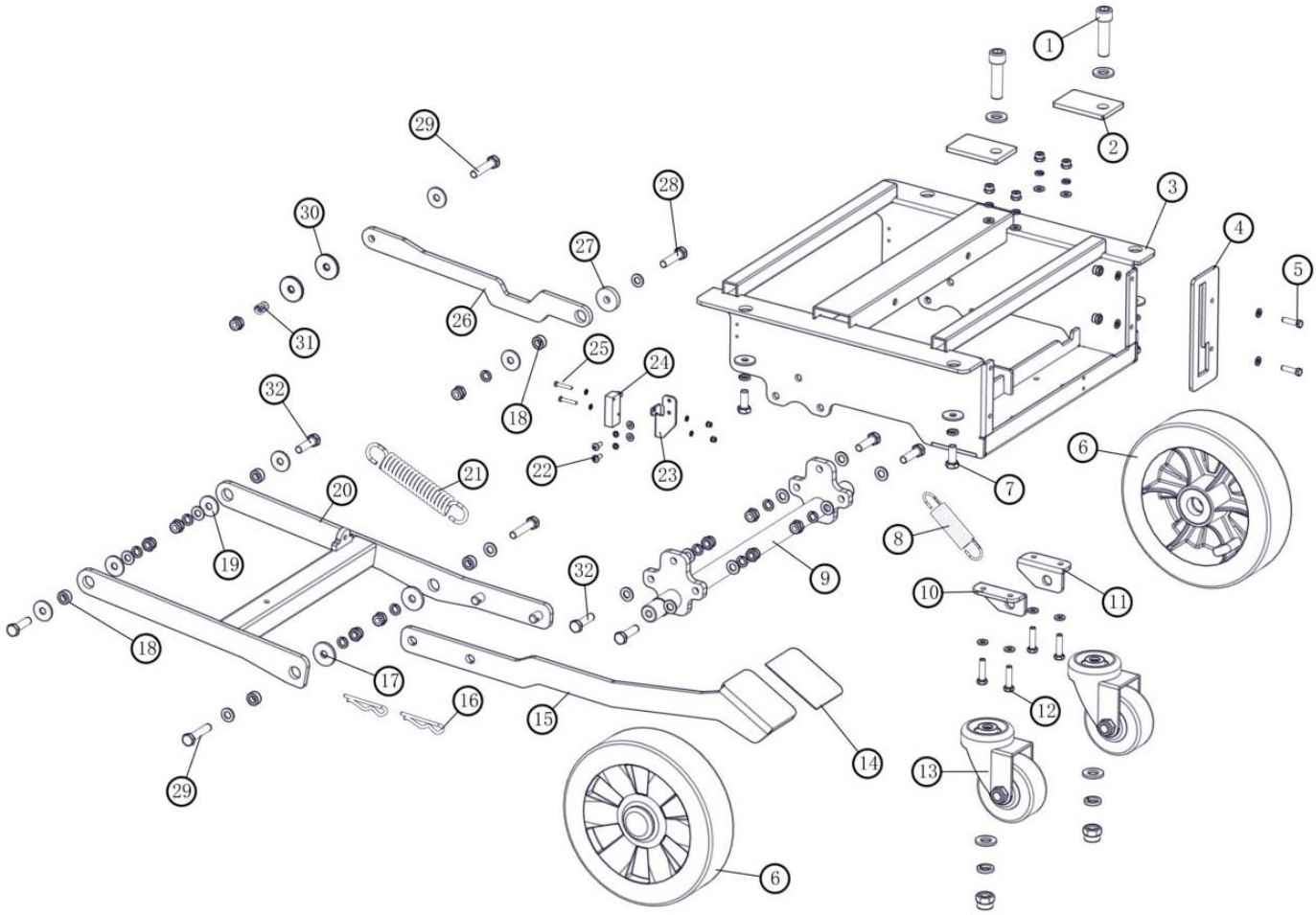

MAIN FRAME GROUP

Ref.	Part No.	Mfr. Date	Description	Qty.
1	CN4000228	( )	Screw, Soc, M12 X 45, 12.9	2
2	CN5006125	( )	Plate, Castor	2
3	CN5006077	( )	Frame Wldt	1
4	CN5006085	( )	Plate, Foot, Limiter	1
5	CN4000062	( )	Screw, Soc, M5 X 20	2
6	CN5002310	( )	Wheel, 200.0mmd 50.0mmw 42.0mmb	2
7	12273	( )	Screw, Hex, M8 X 1.25 X 20, Nl, Ss	4
8	CN5006067	( )	Spring, Extn, 20.0mmd 2.0mmwir 98.0mml	1
9	CN5006078	( )	Shaft Wldt, Axle	1
10	CN5006083	( )	Bracket, Lh	1
11	CN5006084	( )	Bracket, Rh	1
12	1016005	( )	Screw, Hex, M6 X 1.00 X 25, Nl, Fl, Ss	4
12	08712	( )	Nut, Hex, Lock, M6 X 1.00, Nl, Ss	4
13	CN4000699	( )	Caster, Swivel	2
14	CN4000766	( )	Pad, Brush Pedal, Non- Slip	1
15	CN5006236	( )	Plate, Pedal, Arm	1
16	CN4000904	( )	Pin, Cotter, 2x40	2
17	CN4000375	( )	Washer, M8	2
18	CN5005669	( )	Bushing, Brs, 8.2mmb 15.0mmd 7.0mml	5
19	CN4000374	( )	Washer, M8	5
20	CN5006235	( )	Arm Wldt, Lift	1
21	CN5006042	( )	Spring, Extn, 23.5mmd 3.5mmwir 146.0mml	1
22	49697	( )	Screw, Pan, Phl, M4 X 0.70 X 10, Ss	2
22	41579	( )	Washer, Flat, 08, Ss	2
23	CN5006089	( )	Bracket, Switch, Mtg	1
24	CN5006133	( )	Switch, Micro	1
25	06922	( )	Screw, Pan, Phl, M3 X 0.50 X 20, 4.8	2
25	579211	( )	Nut, Hex, Lock, M3 X 0.50, Nl, Ss	2
26	CN5006238	( )	Plate, Brush, Rh	1
27	CN5006086	( )	Washer, 28.0mmd 8.2mmb 6mmt	1
28	09023	( )	Screw, Hex, M8 X 1.25 X 35, Fl, Ss	1
28	08713	( )	Nut, Hex, Lock, M8 X 1.25, Nl, Ss	1
29	74440	( )	Screw, Hex, M8 X 1.25 X 40, Nl, Ss	3
29	08713	( )	Nut, Hex, Lock, M8 X 1.25, Nl, Ss	3
30	CN5005713	( )	Washer, 30.0mmd 8.2mmb 3mmt, Ptfe	2
31	CN5005977	( )	Spring, Cmpr, 12.0mmd 1.4mmwir 14.0mml	1
32	76570	( )	Screw, Hex, M8 X 1.25 X 30, 8.8	6
32	08713	( )	Nut, Hex, Lock, M8 X 1.25, Nl, Ss	6

ELECTRICAL GROUP

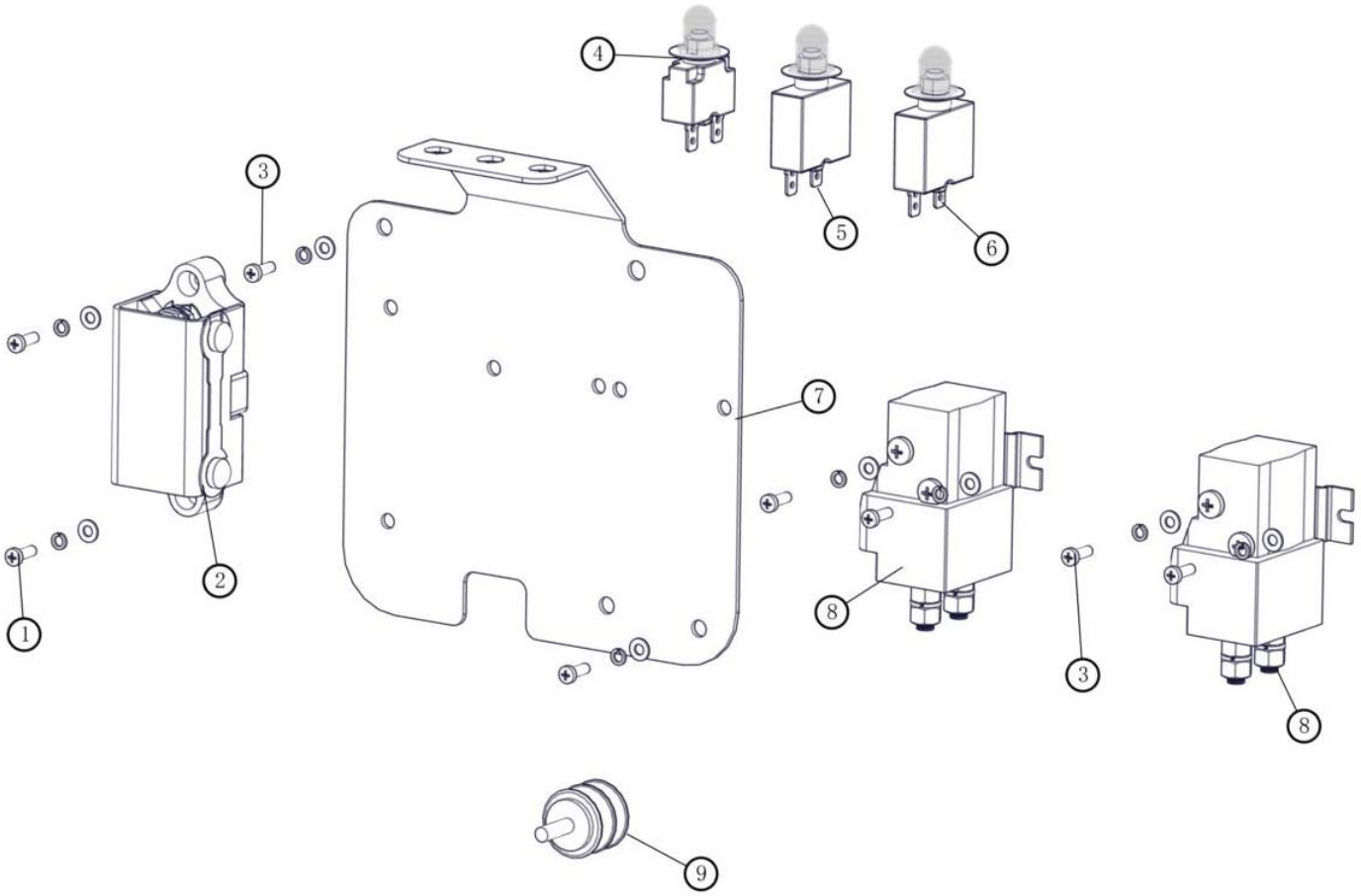

ELECTRICAL GROUP

Ref.	Part No.	Mfr. Date	Description	Qty.
1	CN4000194	( )	Screw, Pan, Phl, M4 X 14	2
1	41579	( )	Washer, Flat, 08, Ss	2
2	CN5001636	( )	Fuse,100a	1
3	579237	( )	Screw, Pan, Phl, M4 X 0.70 X 12, Ss	6
3	41579	( )	Washer, Flat, 08, Ss	6
4	CN5001643	( )	Fuse, 5a	1
5	CN5001647	( )	Fuse, 25a	1
6	CN5001644	( )	Fuse, 30a	1
7	CN5006242	( )	Bracket, Ele, Mtg	1
8	CN5001703	( )	Contactor, Sw60- 40p	2
9	CN5001698	( )	Knob, Head	1

CONTROL PANEL GROUP

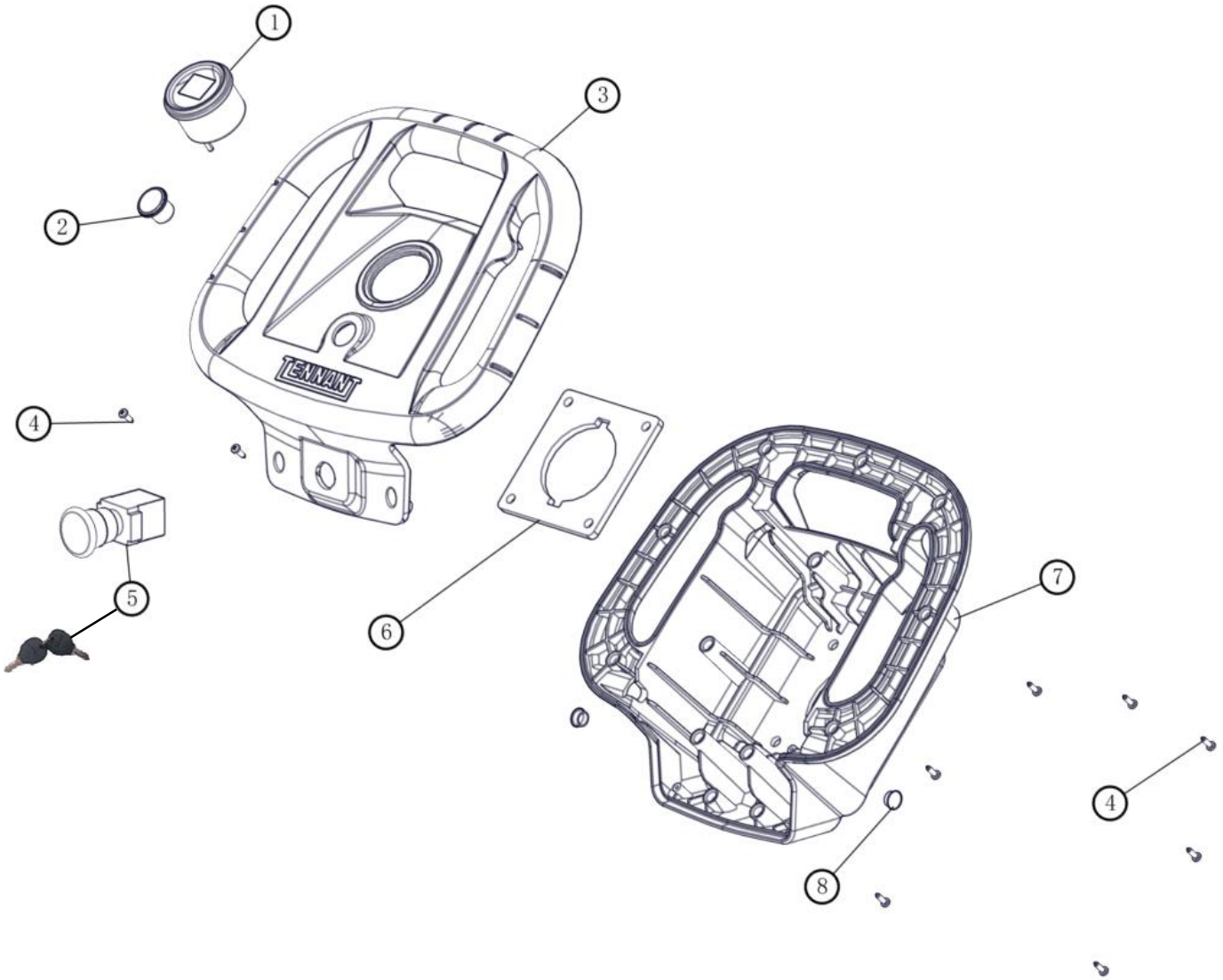

CONTROL PANEL GROUP

	Ref.	Part No.	Mfr. Date	Description	Qty.
	1	CN5006049	( )	Gauge, Battery	1
	2	CN5006233	( )	Switch, Light, Green	1
	3	CN5006222	( )	Housing, Handle, Cntrl, Top	1
	4	CN4001130	( )	Screw, Pan, Phl, M3.5 X 12, Fmg	9
∇	5	CN5001546	( )	Switch, Safety, Shutoff, W/ Key	1
▲		CN5001555	( )	Switch, E- Stop	1
▲		CN5001519	( )	Key	1
	6	CN5005689	( )	Plate, Handle	1
	7	CN5006223	( )	Housing, Handle, Cntrl, Bottom	1
	8	CN5006111	( )	Plug, Hole, Rnd, 13mm	2

∇ ASSEMBLY

▲ INCLUDED IN ASSEMBLY

WHEEL ASSEMBLY

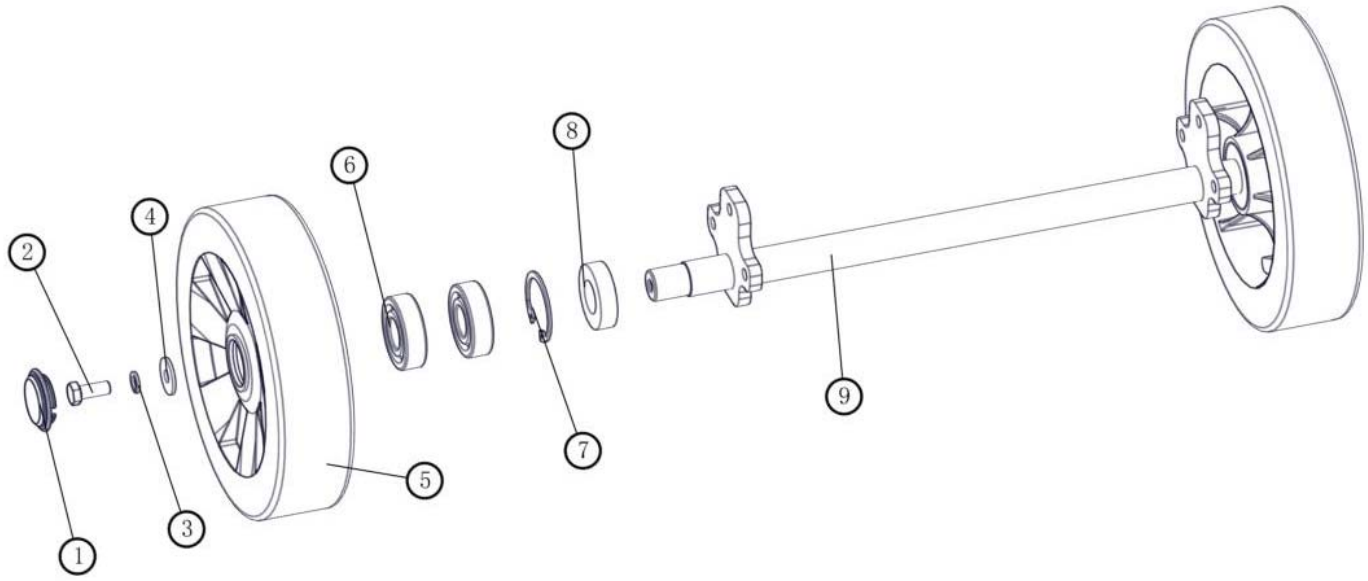

WHEEL ASSEMBLY

Ref.	Part No.	Mfr. Date	Description	Qty.
1	CN5006221	( )	Cap, Hub, Dust, 28.5mmd 10.8mml	2
2	12273	( )	Screw, Hex, M8 X 1.25 X 20, Nl, Ss	2
3	CN4000406	( )	Washer, M8	2
4	CN4000374	( )	Washer, M8	2
5	CN5002310	( )	Wheel, 200.0mmd 50.0mmw 42.0mmb	2
6	CN4000522	( )	Bearing, Ball	4
7	CN4000499	( )	Ring, Retaining, Int, 42mmd	2
8	CN4000673	( )	Seal, Washer, 42.0mmd 22.0mb 11mml	2
9	CN5006078	( )	Shaft Wldt, Axle	1

MOTOR ASSEMBLY

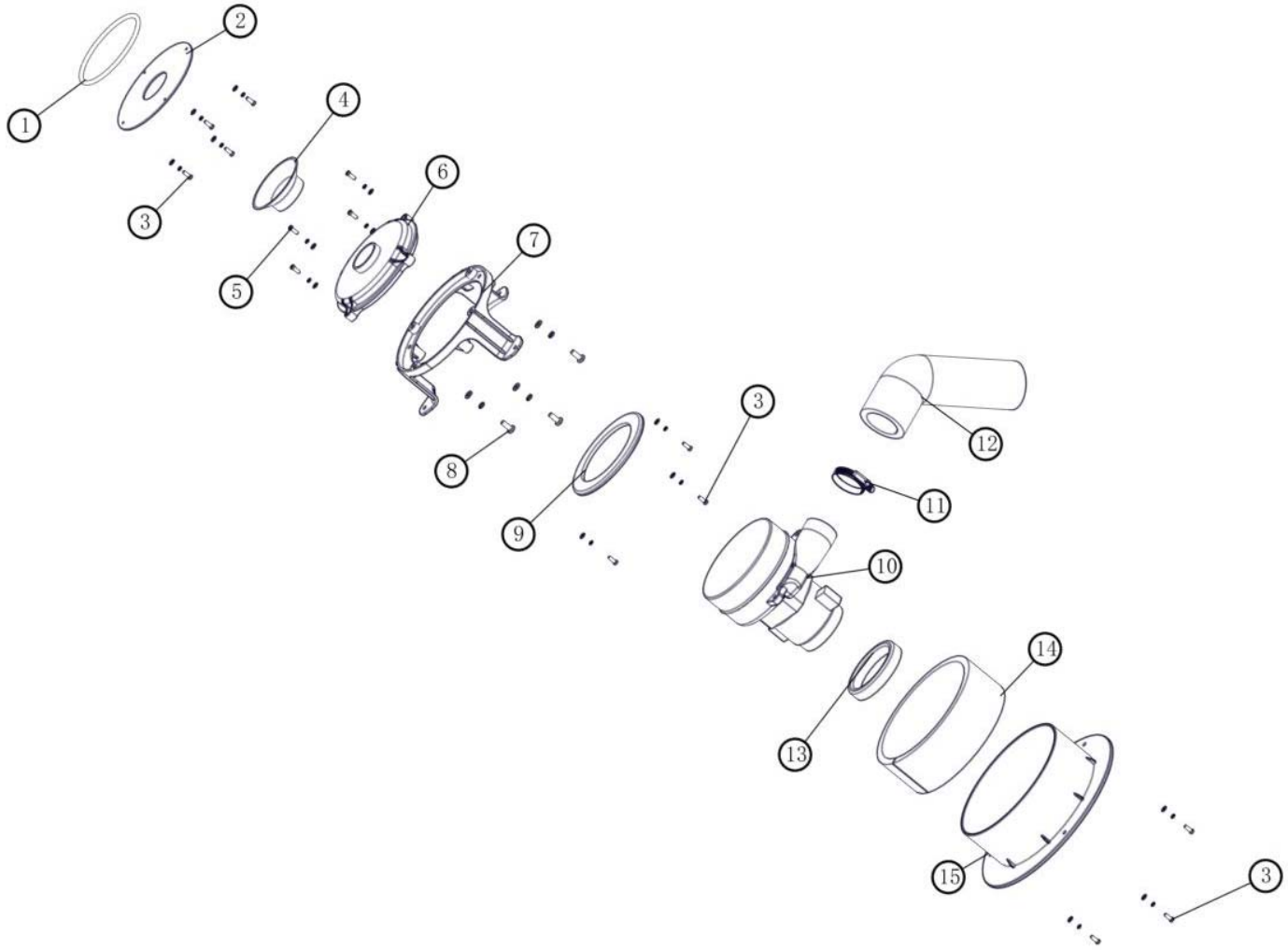

MOTOR ASSEMBLY

	Ref.	Part No.	Mfr. Date	Description	Qty.
	1	CN4000660	( )	Seal, Org, 5.3mm X 115mm Id	1
	2	CN5000511	( )	Plate, Motor	1
	3	579237	( )	Screw, Pan, Phl, M4 X 0.70 X 12, Ss	10
	3	41579	( )	Washer, Flat, 08, Ss	10
	4	CN5002337	( )	Fitting, Motor, Mount	1
	5	06929	( )	Screw, Pan, Phl, M4 X 0.70 X 25, 4.8	4
	5	41579	( )	Washer, Flat, 08, Ss	4
	6	CN5002144	( )	Cover, Motor, Vacfan	1
	7	CN5006115	( )	Mount, Vacfan	1
	8	CN4001030	( )	Screw, Pan, Phl, M6 X 20	3
	9	CN5002338	( )	Gasket, 145.0mm Od 105.0mm Id 6.4mm T	1
∇	10	CN5002458	( )	Fan, Vacuum	1
▲		CN5001828	( )	Brush, Motor	1
	11	CN4000009	( )	Clamp, Hose, Wormdrive, 33 - 57mm Id	1
	12	CN5003632	( )	Muffler, Exhaust, Vacfan	1
	13	CN5005973	( )	Dampener, Ring, 95.6od 77.0id 12.5t	1
	14	CN5006070	( )	Insulation, Acstc	1
	15	CN5006114	( )	Housing, Motor	1

∇ ASSEMBLY

▲ INCLUDED IN ASSEMBLY

SOLUTION TANK GROUP

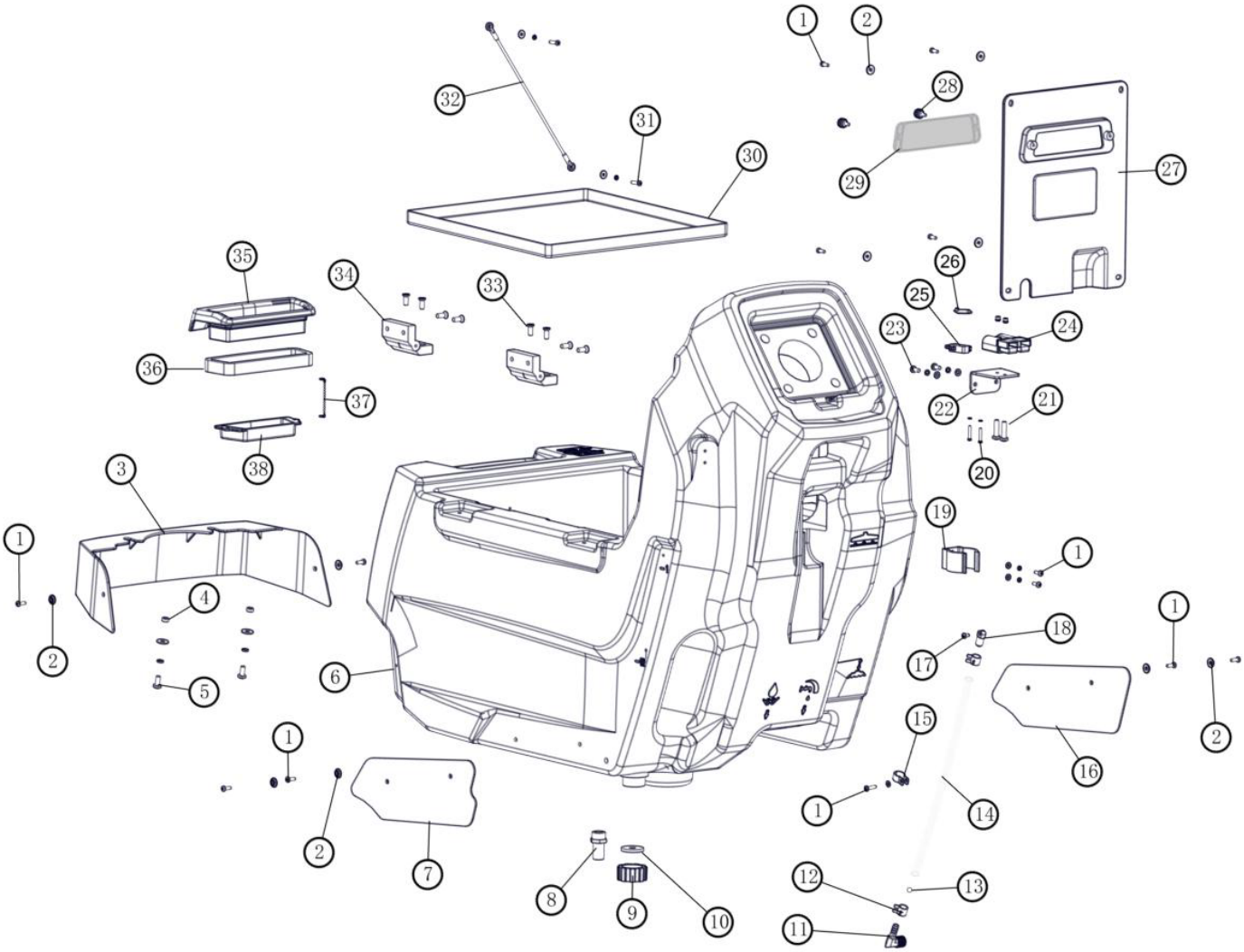

SOLUTION TANK GROUP

Ref.	Part No.	Mfr. Date	Description	Qty.
1	579237	( )	Screw, Pan, Phl, M4 X 0.70 X 12, Ss	16
2	CN5005283	( )	Washer, Nyl, Blk, 14.0mmd 4.5mmb 3.0mmt	11
3	CN5006225	( )	Shroud, Frame, Front	1
4	CN5006097	( )	Bushing, 9mmod 6mmid 4mmt	2
5	CN4000231	( )	Screw, M6 X 14	2
6	CN5006213	( )	Tank, Soltn, Rm- Tl	1
7	CN5006227	( )	Plate, Cover, Tank, Soltn, Lh	1
8	CN5001393	( )	Fitting	1
9	CN5001935	( )	Cap, Soltn, Tank	1
10	CN5002217	( )	Washer, Gasket	1
11	CN5001384	( )	Fitting, Brs, E90	1
12	CN4001008	( )	Clamp, Hose	2
13	CN5002145	( )	Float, Level, Red, 6mm	1
14	CN5002856	( )	Gm110 Transparent Tube, ?¨¦8	1
15	CN4000020	( )	Clamp, Cable, 24.0mmd, 1hole	1
16	CN5006228	( )	Plate, Cover, Tank, Soltn, Rh	1
17	CN4000194	( )	Screw, Pan, Phl, M4 X 14	1
18	CN5002029	( )	Fitting	1
19	CN5001942	( )	Clip, Hose	1
20	06929	( )	Screw, Pan, Phl, M4 X 0.70 X 25, 4.8	2
21	CN4000112	( )	Screw, Pan, Phl, M4 X 25	2
21	33932	( )	Nut, Hex, Lock, M4 X 0.70, Nl, Ss	2
22	CN5006100	( )	Bracket, Charging	1
23	09200	( )	Screw, Pan, Phl, M5 X 0.80 X 12, Ss	2
23	140011	( )	Washer, Flat, 0.21b 0.45d .03, Ss	2
24	CN5006059	( )	Cable, Charging	1
25	TN5100004	( )	Switch, Mircro	1
26	1013705	( )	Plate, Thread, Switch, M3 Nut, 96hr Pl	1
27	CN5006113	( )	Cover, Plt, Ele	1
28	CN4001106	( )	Screw, M4 X 10	2
29	CN5005734	( )	Cover, Wndw	1
30	CN5001940	( )	Tray, Battery	1
31	24265	( )	Screw, Pan, Phl, M4 X 0.70 X 16, Ss	2
32	CN4001158	( )	Cable, 320mml X 2.5mmd 6.5eye/6.5eye	1
33	16879	( )	Screw, Flt, Soc, M6 X 1.00 X 20, 10.9	8
34	CN4001141	( )	Hinge Assy	2
35	CN5006220	( )	Cap, Tank, Soltn	1
36	CN5006246	( )	Seal, Strip, 420mm X 18mm X 7mm	1
37	CN4000781	( )	Chain	2
37	CN4000048	( )	Screw, Phl	1
38	CN5006234	( )	Tray, Debris, Tank, Soltn	1
N/S	CN5006061	( )	R45 Wiring Harness 5	1

SCRUB HEAD GROUP

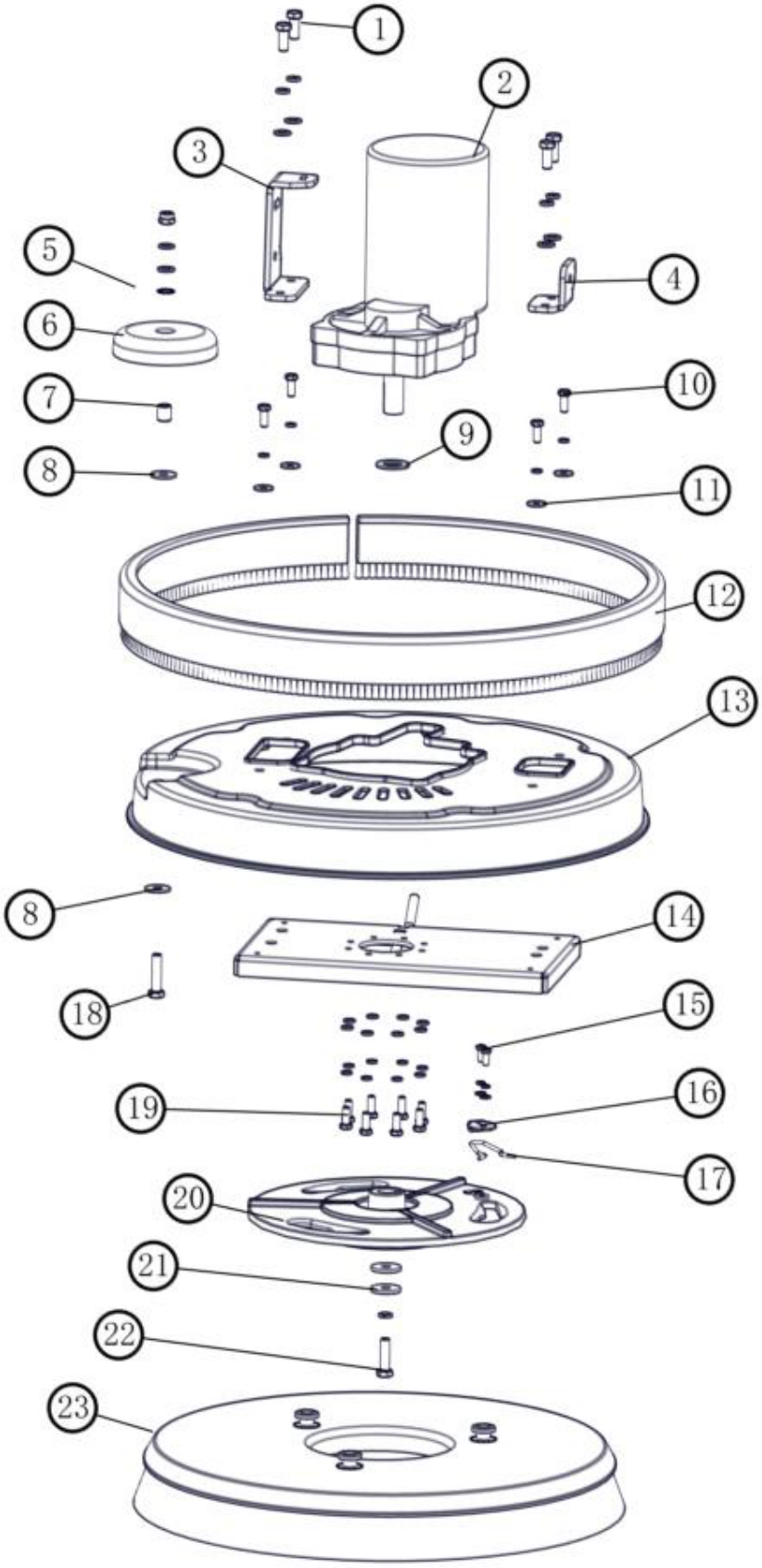

SCRUB HEAD GROUP

	Ref.	Part No.	Mfr. Date	Description	Qty.
	1	12273	( )	Screw, Hex, M8 X 1.25 X 20, Nl, Ss	4
∇	2	CN5005651	( )	Motor, Ele	1
▲		CN5001828	( )	Brush, Motor	1
	3	CN5006239	( )	Bracket, Brush	1
	4	CN5006090	( )	Bracket, Brush, Tray	1
	5	CN4000418	( )	Washer	1
	6	CN5001941	( )	Guide, Wheel, Blk	1
	7	CN5000974	( )	Bushing, Brs, 8.2mmb, 12.3mmd, 14mml	1
	8	CN4000374	( )	Washer, M8	2
	9	CN5005987	( )	Washer, Flat, 31.0mmd 18.2mmb 2.0mm	1
	10	11329	( )	Screw, Hex, M6 X 1.00 X 16, Nl, Ss	4
	11	01684	( )	Washer, Flat, 0.27b 0.69d .05, Ss	4
	12	CN5006241	( )	Cover, Skirt, Brush	1
	13	CN5006226	( )	Cover, Brush	1
	14	CN5006080	( )	Plate Wldt, Brush, Mtg	1
	15	09200	( )	Screw, Pan, Phl, M5 X 0.80 X 12, Ss	2
	15	140011	( )	Washer, Flat, 0.21b 0.45d .03, Ss	2
	16	CN5005707	( )	Plate, Clamp, Brush	1
	17	CN5005725	( )	Clip, Spring, Drive, Hub, Release	1
	18	1016399	( )	Screw, Hex, M8 X 1.25 X 30, Nl, Ss	1
	18	08713	( )	Nut, Hex, Lock, M8 X 1.25, Nl, Ss	1
	19	12277	( )	Screw, Hex, M6 X 1.00 X 20, Nl, Ss	8
	20	CN5005656	( )	Hub, Drive, 3 Lug, Alm	1
	21	CN4000375	( )	Washer, M8	2
	22	12333	( )	Screw, Hex, M8 X 1.25 X 25, Ss, Nl	1
	23	CN5006244	( )	Bush Assy, Disc, Scb, 50cm	1
	23	CN5006245	( )	Driver Assy, Pad, 50cm, 3 Lug	1

∇ ASSEMBLY

▲ INCLUDED IN ASSEMBLY

HOSE GROUP

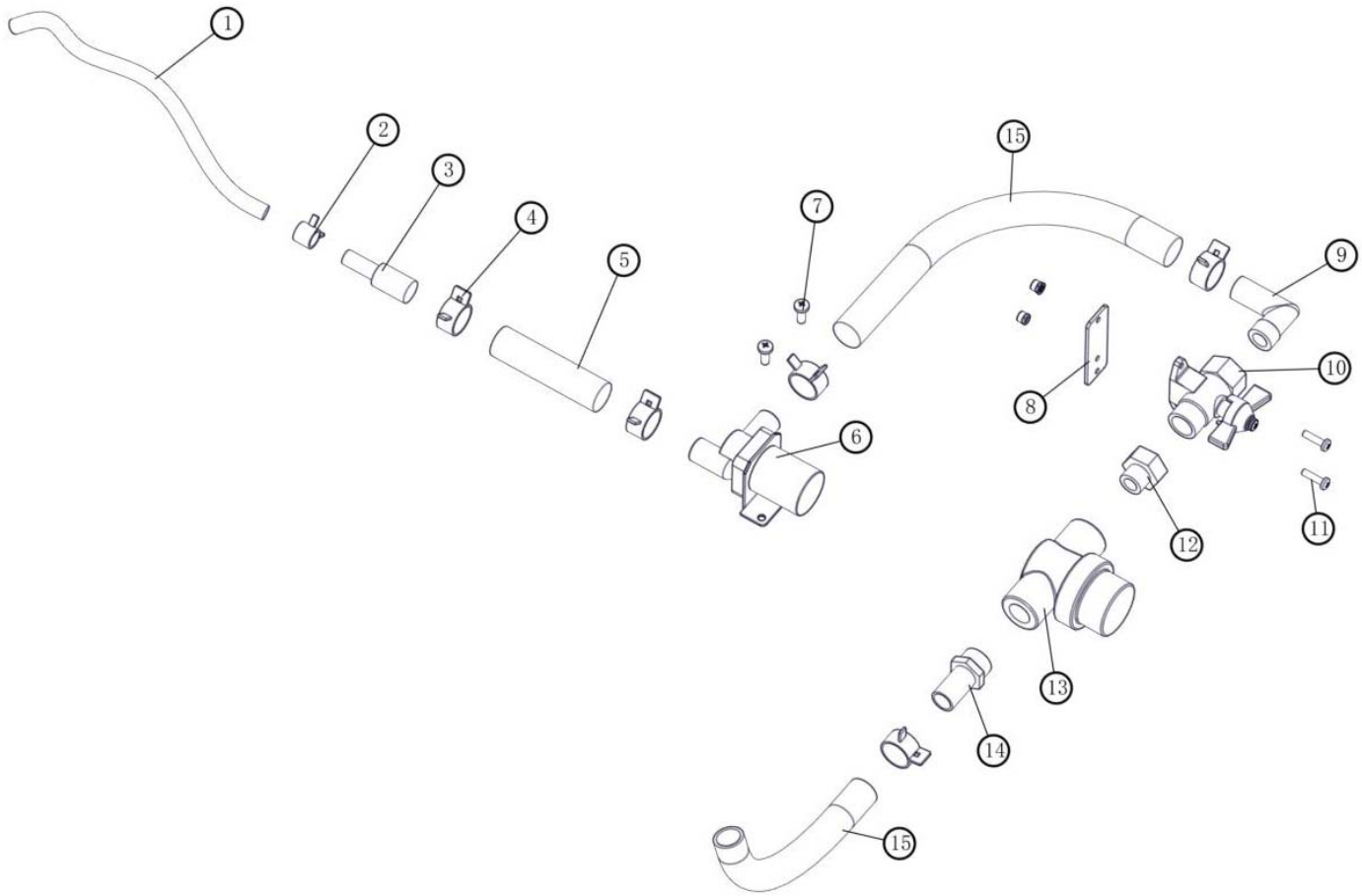

HOSE GROUP

Ref.	Part No.	Mfr. Date	Description	Qty.
1	CN5002865	( )	Hose, Silicone, 8mmid X 12mmod	1
2	CN5004738	( )	Clamp, Hose, Spring, 13mmd	1
3	CN5004737	( )	Fitting, Str, Adapter	1
4	CN5004739	( )	Clamp, Hose, Spring, 20mmd	5
5	CN5004321	( )	Hose, Silicone, 15mmid X 21mmod	1
6	CN5003085	( )	Solenoid Assy, 24vdc	1
7	06933	( )	Screw, Pan, Phl, M5x0.80x16, 4.8	2
8	CN5006088	( )	Plate, Water, Retaining	1
9	CN5001436	( )	Fitting, Brs, E90	1
10	CN5004736	( )	Valve, Ball	1
11	24265	( )	Screw, Pan, Phl, M4 X 0.70 X 16, Ss	2
12	CN5004733	( )	Fitting	1
13	CN5004741	( )	Filter, Mesh	1
14	CN5005002	( )	Fitting, Brs, Str	1
15	CN5004320	( )	Hose, Silicone, 13mmid X 19mmod	2

RECOVERY TANK GROUP

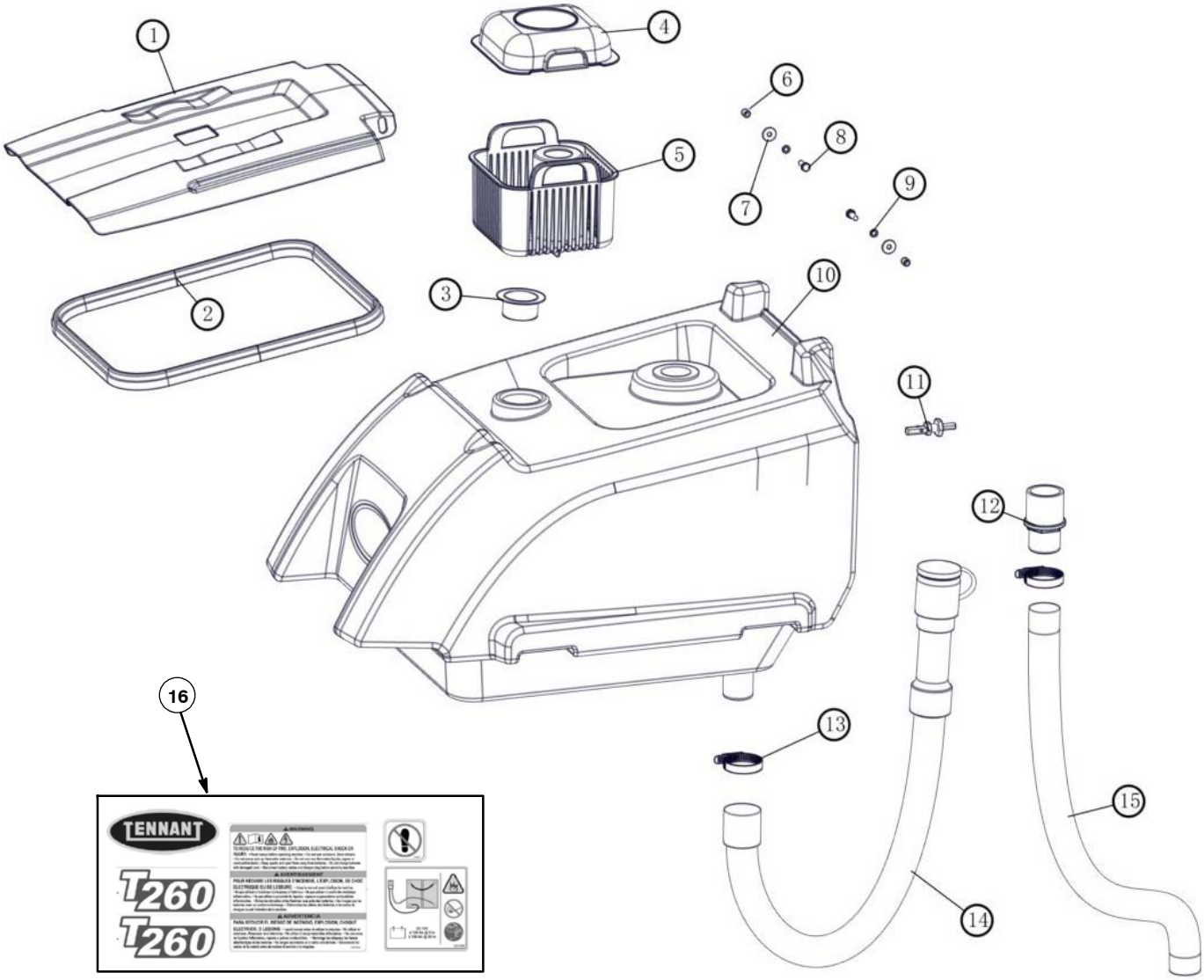

RECOVERY TANK GROUP

Ref.	Part No.	Mfr. Date	Description	Qty.
1	CN5006224	( )	Cover, Tank, Recvy	1
2	CN5003686	( )	Gasket	1
3	CN5006130	( )	Cover, Motor	1
4	CN5005723	( )	Cover, Debris, Tank, Recvy	1
5	CN5005711	( )	Tray, Debris, Tank, Recvy	1
6	CN5006096	( )	Bushing, Sleeve, 6.0mmb 9.0mmd 8.0mml	2
7	01684	( )	Washer, Flat, 0.27b 0.69d .05, Ss	2
8	11329	( )	Screw, Hex, M6 X 1.00 X 16, Nl, Ss	2
9	CN4000405	( )	Washer, M6	2
10	CN5006214	( )	Tank, Recvy, Rm- Tl	1
11	CN5003089	( )	Sensor, Level, Liq	1
12	CN5002179	( )	Adapter, Hose, Str	1
13	CN4000009	( )	Clamp, Hose, Wormdrive, 33 - 57mm Id	2
14	CN5002833	( )	Hose Assy, Drain, 38mmd 990mml	1
15	CN5002836	( )	Hose, Sqge, Rear, 38mm Dia	1
16	N/A	( )	Label Set [T260]	1

SQUEEGEE ADJUSTMENT GROUP

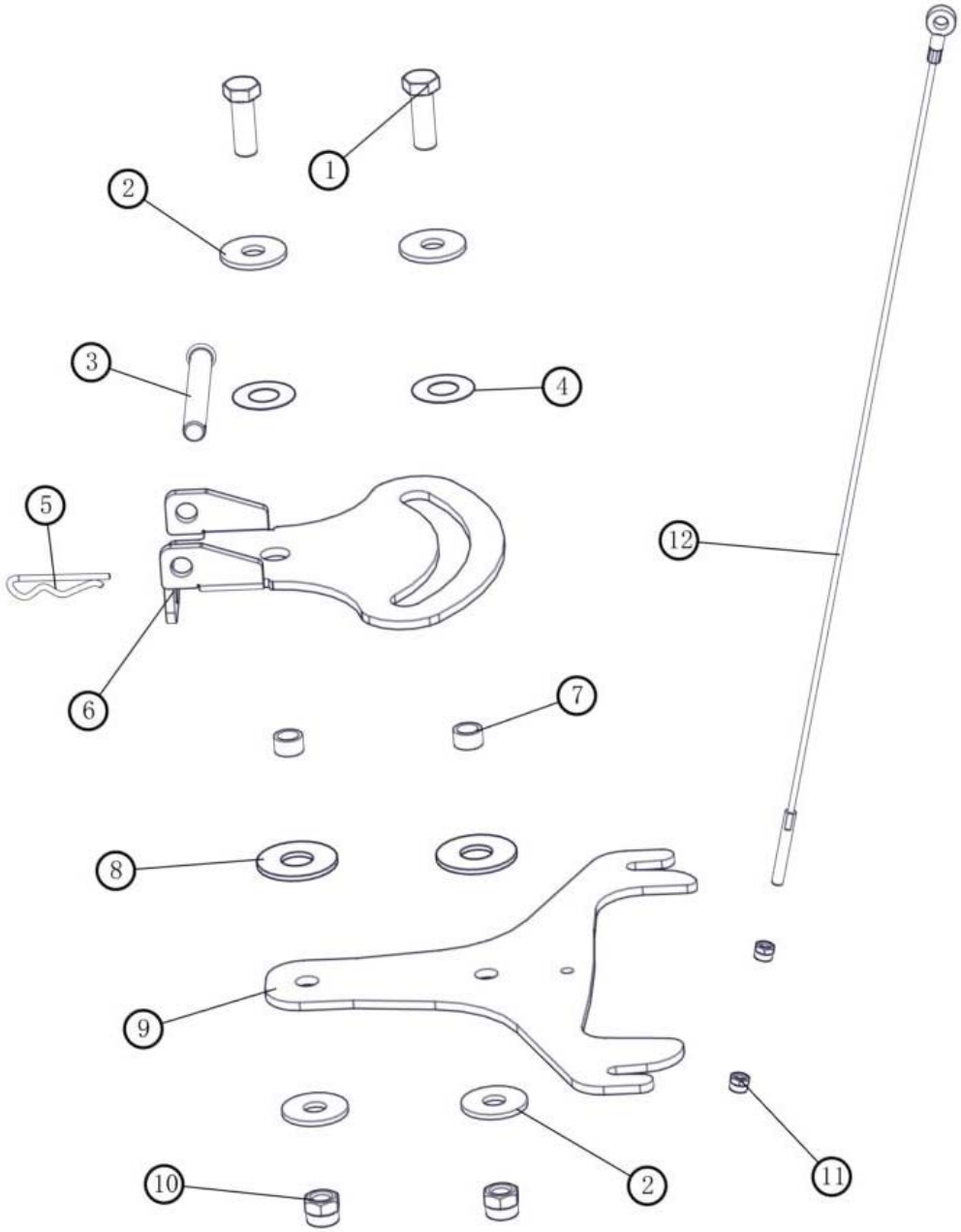

SQUEEGEE ADJUSTMENT GROUP

Ref.	Part No.	Mfr. Date	Description	Qty.
1	06968	( )	Screw, Hex, M12 X 1.75 X 35, 8.8	2
2	32493	( )	Washer, Flat, 0.56b 1.38d .11, Stl, Pl	4
3	CN4001142	( )	Pin, Clevis, 12mmd X 95mml	1
4	CN4001004	( )	Washer, 35mmd 17mmb 0.5mml	2
5	CN4000904	( )	Pin, Cotter, 2x40	1
6	CN5006094	( )	Bracket, Lift, Sqge	1
7	CN5006098	( )	Sleeve, 12mmb 16mmd 9.2mml	2
8	CN5004742	( )	Washer, 45mmd 18mmb 3mml	2
9	CN5006237	( )	Plate, Mtg, Sqge	1
10	09741	( )	Nut, Hex, Lock, M12 X 1.75, Nl, Ss	2
11	1007108	( )	Nut, Hex, Lock, M6 X 1.00, Kep, Ext	2
12	CN4001159	( )	Cable, 530mml X 3mmd 8.2eye/M6	1

SQUEEGEE LIFT GROUP

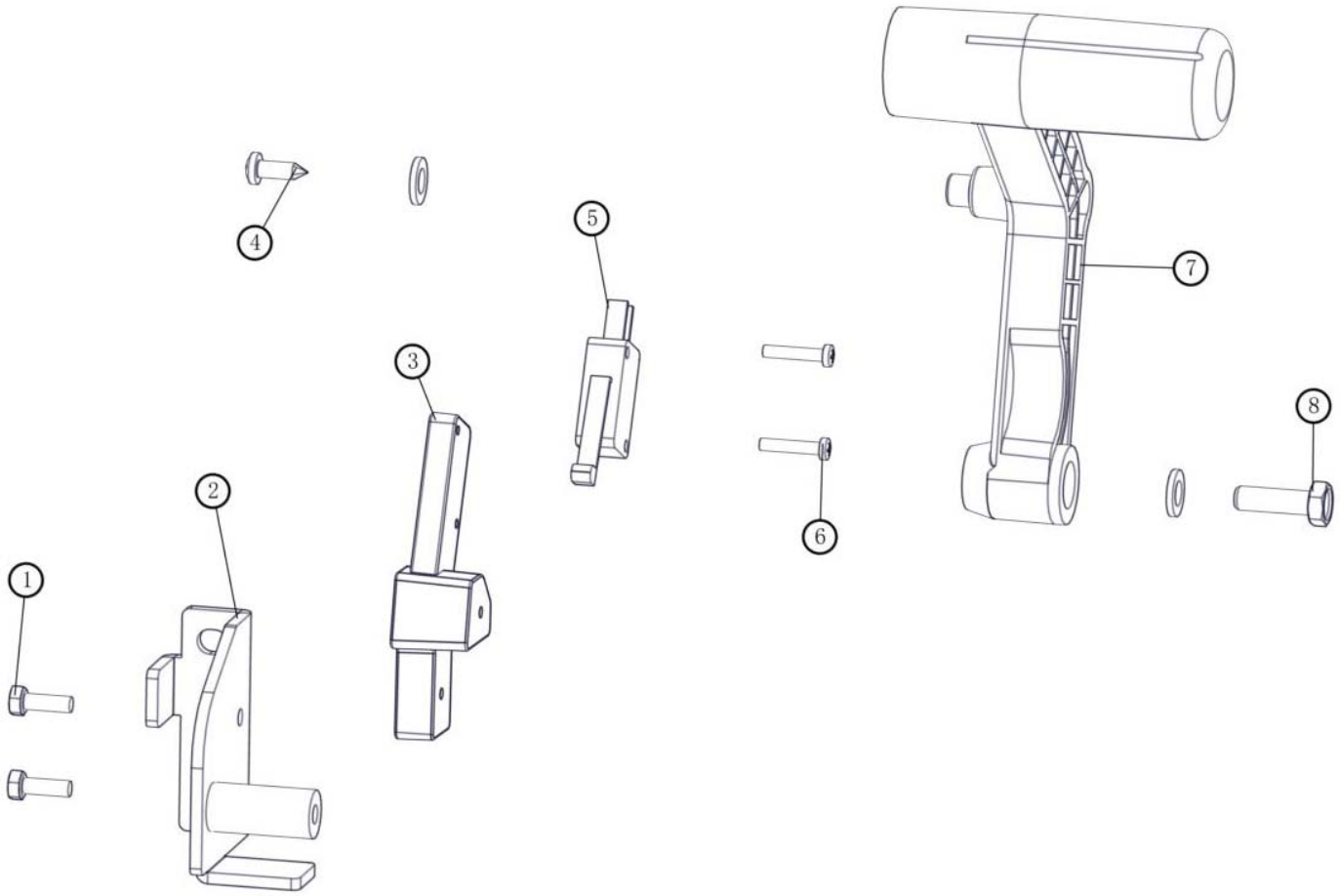

SQUEEGEE LIFT GROUP

Ref.	Part No.	Mfr. Date	Description	Qty.
1	579237	( )	Screw, Pan, Phl, M4 X 0.70 X 12, Ss	2
1	41579	( )	Washer, Flat, 08, Ss	2
2	CN5000028	( )	Bracket, Lifting, Suction	1
3	CN5006106	( )	Arm, Mtg, Switch, Alm	1
4	CN4000048	( )	Screw, Phl	1
5	CN5001521	( )	Switch, Micro	1
6	06921	( )	Screw, Pan, Phl, M3 X 0.50 X 16, 4.8	2
7	CN5001932	( )	Handle, Sqge, Lower, Lift	1
8	CN4000068	( )	Screw, Hex, M6 X 12	1

SQUEEGEE ASSEMBLY, 50 CM / 20 IN

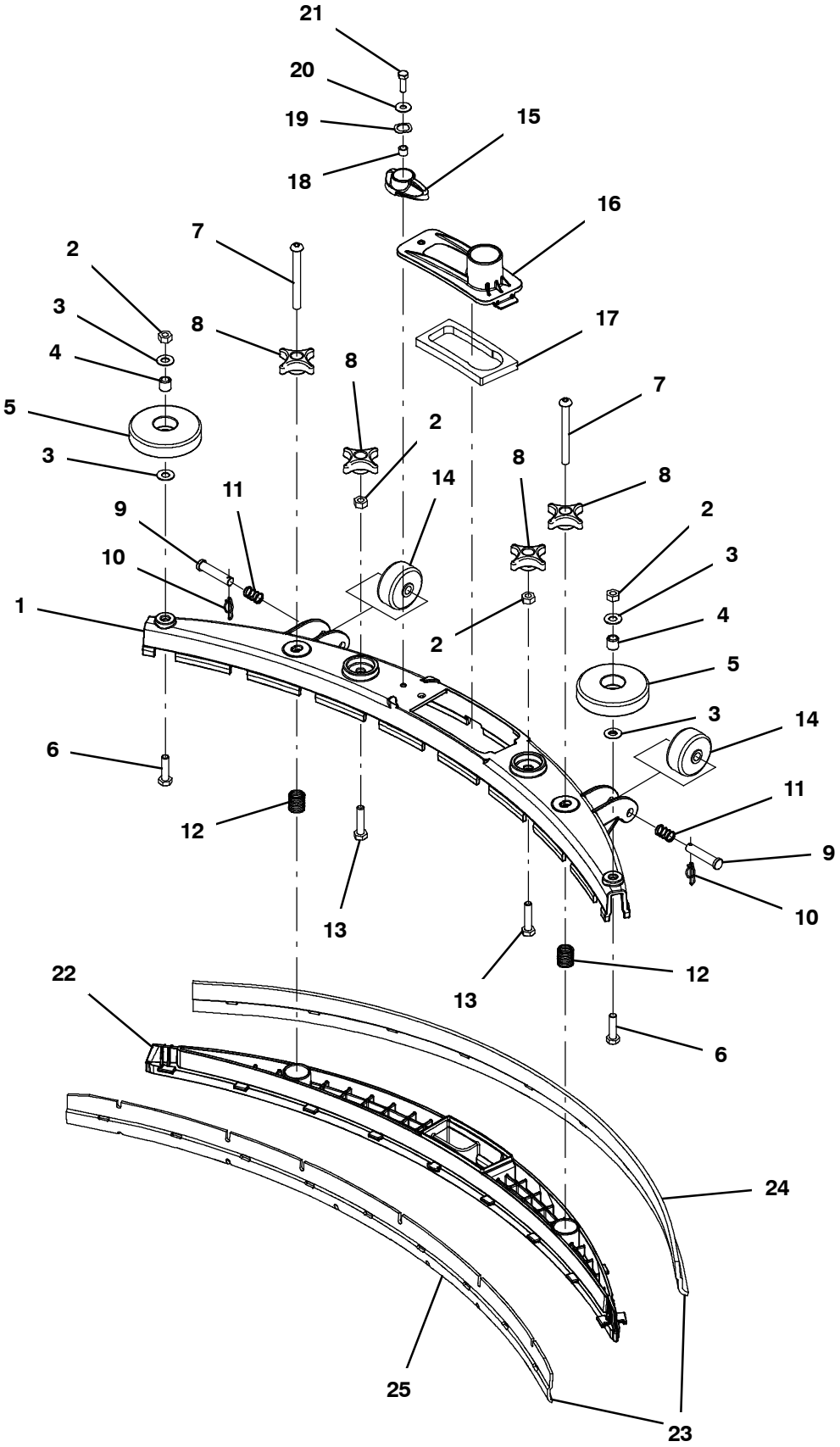

SQUEEGEE ASSEMBLY, 50 CM / 20 IN

	Ref.	Part No.	Mfr. Date	Description	Qty.
∇		9014172	( )	Squeegee Kit, Linatex, Ci [T300/E/Ss300]	1
▲	1	1230946	( )	Frame, Sqge, 50cm, Mach [T300]	1
▲	2	07786	( )	Nut, Hex, Std, M8 X 1.25, Ss	2
▲	3	140027	( )	Washer, Flat, 0.35b 0.75d .04, Ss	4
▲	4	222460	( )	Sleeve, P/M, 0.32b 0.50d 0.5l [430ss]	2
▲	5	1010560	( )	Wheel, Bmpr, 80d X 25w, Non- Marking	2
▲	6	1016399	( )	Screw, Hex, M8 X 1.25 X 30, Nl, Ss	2
▲	7	1255358	( )	Screw, Btn, M8 X 1.25 X 85, Ss	2
▲	8	1213677	( )	Knob, Star, 2.00od 4ear M8x1.25 [Yel]	4
▲	9	17461	( )	Pin, Clevis, 0.37d X 1.75l	2
▲	10	1216647	( )	Pin, Cotter, Hair, 0.38d .054 Wir	2
▲	11	1017091	( )	Spring, Cmpr, 0.50od .04wir 00.8l	2
▲	12	22290	( )	Spring, Cmpr, 0.72od .06wir 02.3l	2
▲	13	09026	( )	Screw, Hex, M8 X 1.25 X 40, Ss	2
▲	14	630477	( )	Wheel, Pyu, 02.0d 0.38w, Gray	2
▲	15	1222109	( )	Knob, Sqge, 58l, M6 X 1.00, Plstc	1
▲	16	1209631	( )	Cover, Trap, Water, Sqge	1
▲	17	1210756	( )	Gasket, Trap, Water, Sqge	1
▲	18	140154	( )	Sleeve, P/M, 0.25b 0.38d 0.3l, Pl	1
▲	19	140060	( )	Washer, .505 X .750 X 0.45 Wave	1
▲	20	01684	( )	Washer, Flat, 0.27b 0.69d .05, Ss	1
▲	21	12277	( )	Screw, Hex, M6 X 1.00 X 20, Nl, Ss	1
▲	22	1203638	( )	Retainer, Sqge [T300]	1
▲∇	23	9015731	( )	Blade Kit, 500mm, Linatex (Standard)	1
▲▲	24	1203953	( )	Blade, Sqge, Rear, 836l, Linatex[500mm] (Standard)	1
▲▲	25	1203954	( )	Blade, Sqge, Front, 788l, Linatex[500mm] (Standard)	1
∇	23	9015732	( )	Blade Kit, 500mm, Urethane (Optional)	1
▲	24	1215609	( )	Blade, Sqge, Rear, 836l, Urethane[500mm] (Optional)	1
▲	25	1215611	( )	Blade, Sqge, Front, 788l, Urethane[500mm (Optional)	1
∇	23	9015730	( )	Blade Kit, 500mm, Gum (Optional)	1
▲	24	1215610	( )	Blade, Sqge, Rear, 836l, Gum[500mm] (Optional)	1
▲	25	1215612	( )	Blade, Sqge, Front, 788l, Gum[500mm] (Optional)	1

∇ ASSEMBLY

▲ INCLUDED IN ASSEMBLY