M30
(Diesel)

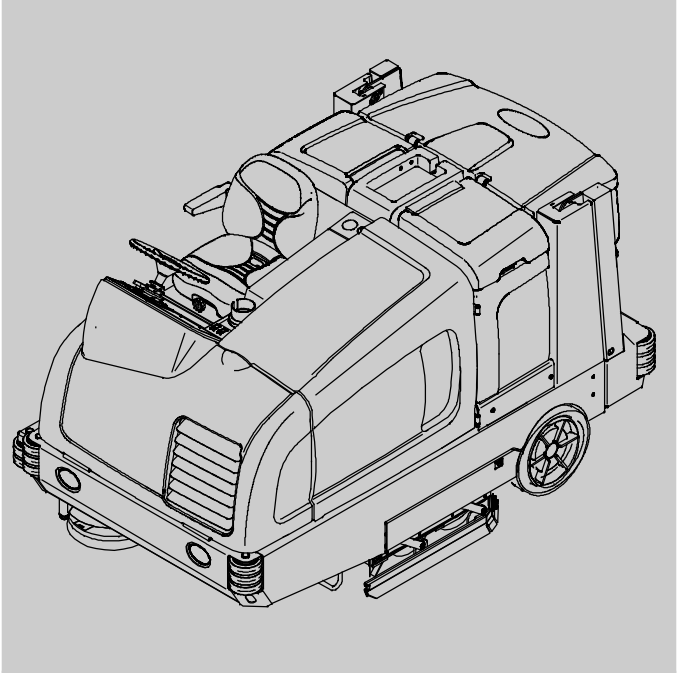

Scrubber- Sweeper Parts Manual

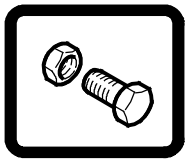

FaST® Foam Scrubbing Technology

ecH2O® An ORBIO™ Technology

The Safe Scrubbing Alternative®
ES® Extended Scrub System
Tennant*True®* *Parts*
Hygenic® Fully Cleanable Tanks
FloorSmart® Integrated Cleaning System
IRIS® a Tennant Technology

CE

Global

For the latest Parts manuals and other language Operator manuals, visit:

www.tennantco.com/manuals

9003952
Rev. 16 (5-2016)

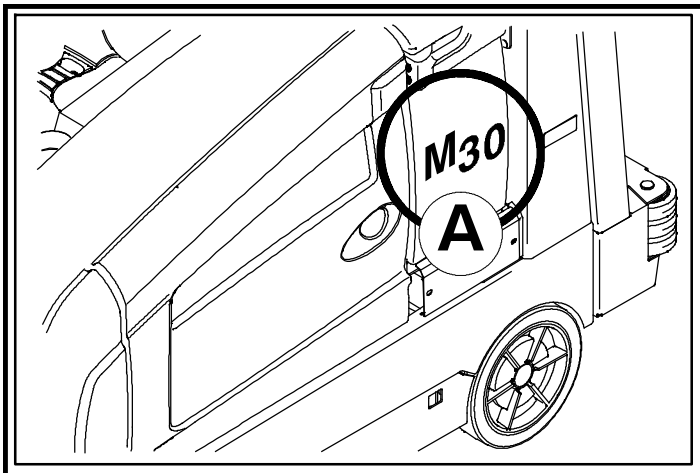

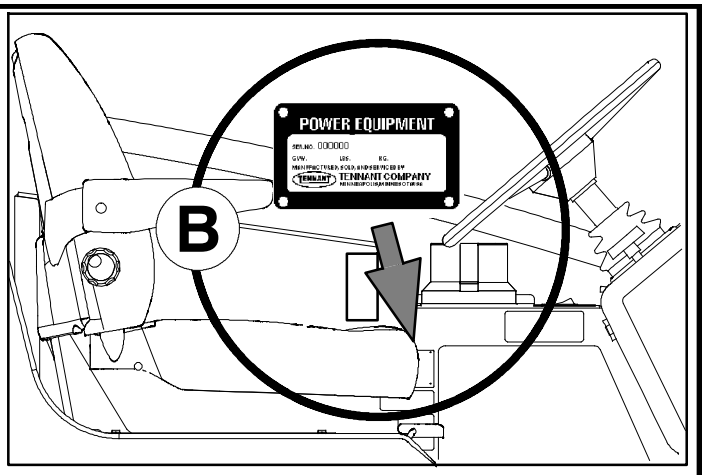

Ref	Part No.	Serial Number	Description	Qty.
1	82681	(000000-)	Bracket Wldt, Lpg Mount	1
▽ 2	63810	(000000-)	Latch Assy, Lpg Tank Mtg, W/Nut	4
▲ 3	51839	(000000)	Nut Adjustable, Lpg Tank Mtg	2
4	49263	(000000-)	Tie, Cable	3
5	82556	(000000- 001039)	Bracket, Vaporizer	1
6	54930	(000000)	Vaporizer, LPG	1

D

C

EN

HOW TO ORDER PARTS - See diagram above

Only use TENNANT Company supplied or equivalent parts. Parts and supplies may be ordered online, by phone, by fax or by mail.

Follow the steps below to ensure prompt delivery.

1. **(A)** Identify the machine model.
2. **(B)** Identify the machine serial number from the data plate.
3. **(C)** Ensure the proper serial number is used from the parts list.
4. Identify the part number and quantity. Do not order by page or reference numbers.
5. Provide your name, company name, customer ID number, billing and shipping address, phone number and purchase order number.
6. Provide detail shipping instructions.

(D) ▽ - Identifies an assembly
▲ - Identifies parts included in assembly

Please fill out at time of installation for future reference.

Model No. - _____

Serial No. - _____

Machine Options - _____

Sales Rep. - _____

Sales Rep. phone no. - _____

Customer ID Number - _____

Installation Date - _____

Tennant Company
PO Box 1452
Minneapolis, MN 55440
Phone: (800) 553-8033 or
(763) 513-2850
www.tennantco.com

Tennant N.V.
Industrielaan 6 5405 AB
P.O. Box 6 5400 AA Uden -
The Netherlands
europe@tennantco.com
www.tennantco.com

テナントカンパニー日本支店
〒210–0916神奈川県川崎市幸区南幸町2–9サンカビル5F
TEL:044–556–1201 FAX:044–556–1202
www.tennant.co.jp

Thermo-Sentry, Touch-N-Go, 1-STEP, Clean-Wedge, Variable Drain Valve, EasyOpen, Grip-N-Go, MaxPro2, Dura-Track, SmartRelease, InstantAccess, Duramer, FaST-PAK, ES, FloorSmart and ErgoSpace are trademarks of Tennant Company.

Specifications and parts are subject to change without notice.

Copyright © 2008 - 2016 TENNANT Company, Printed in U.S.A.

BG

КАК ДА ПОРЪЧВАМЕ ЧАСТИ - Вижте схемата по-горе

Използвайте само части, доставени от TENNANT или техни еквиваленти. Частите и доставките могат да се поръчат онлайн, по телефон, факс или по пощата.

Следвайте долупосочените стъпки, за да си осигурите бърза и точна доставка.

1. **(A)** Посочете модела на машината.
2. **(B)** Посочете серийния номер на машината от табелката с техническите данни.
3. **(C)** Уверете се, че сте използвали точния сериен номер от списъка с части.
4. Посочва номера на частта и количеството. Не поръчвайте части според страницата или референтните номера.
5. Посочете своето име, наименованието на фирмата, клиентския номер, адреса за получаване на сметката и доставката, тел.номер и номера на поръчката.
6. Посочете подробни инструкции за доставката.

(D) ▽ - посочва начин на монтаж
▲ - посочва частите, включени в монтажа

Моля, попълнете по време на монтажа за бъдеща справка.

Модел Э - _____
Сериен Э - _____
Опции на машината - _____
Търговски представител - _____
Тел. Э на търг. представител - _____
Клиентски Э - _____
Дата на монтаж - _____

CN

如何订购部件 – 参见下表

仅使用 TENNANT 公司提供的或同等部件。部件和供应可以在线订购，通过电话、传真或邮件订购。
请遵循下面的步骤确保及时交付。

1. (A) 确定机器型号。
2. (B) 从数据标签确定机器序列号。
3. (C) 确保使用部件列表中的正确序列号。
4. 确定部件号和数量。
   不要按页面或参考编号订购。
5. 提供您的姓名、公司名称、客户 ID 号、付帐和送货地址、电话号码和采购单编号。
6. 提供详细的送货说明。

(D) ▽ – 确定组件
▲ – 确定组件中包含的组件

请在安装时填写供未来参考。

型号 – _____
序列号 – _____
机器选项 – _____
销售代表– _____
销售代表电话号码 – _____
客户 ID 编号 – _____
安装日期 – _____

CZ

OBJEDNÁVÁNÍ DÍLŮ - Viz schéma výše.

Pou ívejte pouze díly dodané společností TENNANT Company nebo jim odpovídající. Díly a materiál lze objednat online, telefonem, faxem nebo poštou.

Aby bylo zajištěno rychlé dodání, postupujte podle kroků uvedených ní e.

1. **(A)** Zjistěte model stroje.
2. **(B)** Zjistěte sériové číslo stroje z výrobního štítku.
3. **(C)** Pou ijte správné sériové číslo ze seznamu dílů.
4. Určete číslo a mno ství dílů.
   Neobjednávejte podle stran nebo referenčních čísel.
5. Uveďte jméno, název společnosti, číslo ID zákazníka, fakturační a dodací adresu, telefonní číslo a číslo objednávky.
6. Uveďte podrobné pokyny pro dodání.

(D) ▽ - označuje sestavu
▲ - označuje díly v sestavě

Vyplňte během sestavování pro budoucí potřebu.

Číslo modelu - _____
Sériové číslo - _____
Doplňky zařízení - _____
Obchodní zástupce - _____
Tel. č. obchodního zástupce - _____
Číslo ID zákazníka - _____
Datum instalace - _____

DE

BESTELLEN VON ERSATZTEILEN - Siehe oben stehendes Diagramm.

Verwenden Sie nur von TENNANT gelieferte oder gleichwertige Ersatzteile. Ersatz- und Verschleißteile können online, telefonisch, per Fax oder per E-Mail bestellt werden.

Befolgen Sie für eine umgehende Lieferung die folgenden Schritte.

1. **(A)** Geben Sie das Modell der Maschine an.
2. **(B)** Geben Sie die Seriennummer der Maschine an (auf dem Datenaufkleber).
3. **(C)** Achten Sie darauf, dass die richtigen Seriennummer aus der Ersatzteilliste verwendet wird.
4. Geben Sie die Ersatzteilnummer und die Menge an.
   Bestellen Sie nicht nach Seitenzahl oder Referenznummern.
5. Geben Sie Ihren Namen, den Firmennamen, die Kundennummer, die Rechnungs- und Lieferadresse, die Telefonnummer und die Einkaufsauftragsnummer an.
6. Erteilen Sie genaue Versandanweisungen.

(D) ▽ - steht für eine Einheit
▲ - steht für Einzelteile einer Einheit

Bitte bei der Inbetriebnahme als Referenzangabe ausfüllen.

Modellnr. - _____
Seriennr. - _____
Maschinenoptionen - _____
Verkäufer - _____
Telefonnummer des Verkäufers - _____
Kundennummer - _____
Installationsdatum - _____

DK

BESTILLING AF RESERVEDELE - Se ovenstående tabel.

Brug kun reservedele, der er fremstillet af TENNANT, eller dele af tilsvarende kvalitet. Reservedele og tilbehør kan bestilles online, pr. telefon, pr. fax eller pr. brev.

Følg nedenstående trin for at sikre hurtig levering.

1. **(A)** Identificér maskinmodellen.
2. **(B)** Identificér maskinens serienummer på datamærkaten.
3. **(C)** Kontrollér, at det rigtige serienummer bruges i reservedelslisten.
4. Identificér reservedelsnummeret og antallet. Bestil ikke efter side- eller referencenumre.
5. Angiv dit navn, firmanavn, kunde- id- nummer, faktureringsadresse og leveringsadresse, telefonnummer og indkøbsordrenummer.
6. Angiv detaljerede instruktioner til forsendelse.

(D) ▽ - identificerer en enhed
▲ - identificerer reservedele i en enhed

Udfyld venligst på installationstidspunktet til fremtidig brug.

Modelnr. - _____
Serienr. - _____
Maskinekstraudstyr - _____
Salgskonsulent. - _____
Salgskonsulentens tlf. - _____
Kunde- id- nr. - _____
Installationsdato - _____

EE

KUIDAS VARUOSI TELLIDA – vaadake alltoodud joonist

Kasutage ainult TENNANT Company poolt tarnitud või samaväärseid varuosi. Varuosi ja tarvikuid saab tellida Interneti, telefoni, faksi või posti teel.

Kiire kohaletoimetamise tagamiseks järgige alltoodud juhiseid.

1. **(A)** Märkige masina mudel.
2. **(B)** Märkige andmesildil olev masina seerianumber.
3. **(C)** Veenduge, et olete valinud varuosade loendist õige seerianumbri.
4. Märkige varuosa number ja kogus. Ärge tellige lehekülje- või viitenumbri alusel.
5. Märkige oma nimi, ettevõtte nimi, kliendinumber, arveldus- ja saatmisaadress, telefoninumber ja ostutellimuse number.
6. Lisage täpsed saatmisjuhised.

(D) ▽ - tähistab komplekti
▲ - tähistab komplektis olevaid osii

Palun täitke paigaldamise ajal edaspidiseks viitamiseks.

Mudeli number - _____
Seerianumber - _____
Masina lisavarustus - _____
Müügiesindus - _____
Müügiesinduse telefoninumber - _____
Kliendinumber - _____
Paigaldamise kuupäev - _____

ES

CÓMO SOLICITAR PIEZAS - Consulte el diagrama anterior.

Utilice sólo las piezas suministradas por TENNANT Company o piezas equivalentes. Puede solicitar las piezas a través de internet, por teléfono, por fax o por correo.

Siga los siguientes pasos para que la entrega sea rápida.

1. **(A)** Indique el modelo de máquina.
2. **(B)** Indique el número de serie de la etiqueta de datos.
3. **(C)** Asegúrese de que indica el número de serie correcto de la lista de piezas.
4. Indique la cantidad y el número de la pieza. No realice el pedidoindicando el número de página o el de referencia.
5. Incluya su nombre, el nombre de la empresa, el ID de cliente, las direcciones de envío y facturación, el número de teléfono y el número del pedido de compra.
6. Facilite instrucciones de envío.

(D) ▽ - identifica un conjunto
▲ - identifica piezas de un conjunto

Rellene estos datos cuando realice la instalación para utilizarlos como referencia en el futuro.

Nº modelo - _____
Nº serie - _____
Opciones de la máquina - _____
Vendedor - _____
Nº teléfono vendedor - _____
Nº cliente - _____
Fecha de instalación - _____

FI

KUINKA VARAOSIA TILATAAN - katso kuvaa yllä.

Käytä ainoastaan TENNANTIN toimittamia tai niitä vastaavia varaosia. Voit tilata varaosia ja tarvikkeita internetistä, puhelimitse, faksilla tai sähköpostilla.

Noudata seuraavia ohjeita täsmällisen toimituksen varmistamiseksi.

1. **(A)** Katso koneen malli.
2. **(B)** IKatso koneen sarjanumero sen tunnustarrasta.
3. **(C)** Varmista, että osaluettelosta, että käytät oikeaa sarjanumeroa.
4. Katso osanumero ja kappalemäärä. Älä tilaa ilmoittamalla sivu- tai viitenumeroita.
5. Ilmoita nimesi, yrityksesi nimi, asiakasnumero, laskutus- ja toimitusosoite, puhelinnumero ja ostotilauksen numero.
6. Ilmoita yksityiskohtaiset toimitusosoitteet.

(D) ▽ - tarkoittaa kokoonpanoa
▲ - tarkoittaa kokoonpanoon sisältyviä osia

Ole hyvä ja täytä ottaessasi koneen käyttöön myöhempiä tarpeita varten.

Mallinumero - _____
Sarjanumero - _____
Koneen lisävarusteet - _____
Myyntiedustaja - _____
Myyntiedustajan puhelinnumero - _____
Asiakasnumero - _____
Asennuspäivä - _____

FR

COMMENT COMMANDER DES PIÈCES DÉTACHÉES - Voir le schéma ci- dessus.

Utilisez uniquement des pièces fournies par la société TENNANT ou équivalentes. Les pièces et fournitures peuvent être commandées en ligne, par téléphone, fax, ou par courrier.

Suivez les étapes ci- dessous pour assurer une livraison rapide.

1. **(A)** Identifiez le modèle de la machine.
2. **(B)** Identifiez le numéro de série de la machine, à partir de l'étiquette signalétique.
3. **(C)** Assurez- vous que le numéro de série correct est utilisé à partir de la liste de pièces détachées.
4. Identifiez le numéro de pièce et la quantité. Ne commandez pas par page ou numéros de référence.
5. Fournissez votre nom, le nom de votre société, votre numéro d'identification de client, l'adresse de facturation et d'expédition, le numéro de téléphone et le numéro du bon de commande.
6. Fournissez des instructions d'expédition détaillées.

(D) ▽ - identifie un assemblage
▲ - identifie les pièces composant l'assemblage

A remplir au moment de l'installation à titre de référence.

Nº du modèle - _____
Nº de série - _____
Options de la machine - _____
Agent commercial - _____
Nº tél. de l'agent commercial - _____
Numéro d'identification client - _____
Date d'installation - _____

GR

ΤΡΟΠΟΣ ΠΑΡΑΓΓΕΛΙΑΣ ΑΝΤΑΛΛΑΚΤΙΚΩΝ - Βλ. παραπάνω διάγραμμα.

Χρησιμοποιήστε μόνο ανταλλακτικά παρεχόμενα από την TENNANT Company ή ισοδύναμα. Τα ανταλλακτικά και αναλώσιμα μπορούν να παραγγελθούν online, τηλεφωνικά, με φαξ ή ταχυδρομικά.

Ακολουθήστε τα παρακάτω βήματα για να εξασφαλίσετε την έγκαιρη αποστολή τους.

1. **(A)** Βρείτε το μοντέλο μηχανήματος.
2. **(B)** Βρείτε τον αριθμό σειράς του μηχανήματος από την ετικέτα στοιχείων.
3. **(C)** Βεβαιωθείτε ότι χρησιμοποιείται ο σωστός αριθμός σειράς από τον κατάλογο ανταλλακτικών.
4. Βρείτε κωδικό ανταλλακτικού και ποσότητα. Μην παραγγέλνετε βάσει σελίδας ή αριθμών αναφοράς.
5. Δώστε το όνομα σας, όνομα εταιρείας, ID (κωδικό) πελάτη, διεύθυνση τιμολόγησης και αποστολής, αριθμό τηλεφώνου και αριθμό εντολής προμήθειας.
6. Δώστε λεπτομερείς πληροφορίες αποστολής.

(D) ▽ - υποδηλώνει υποσύστημα
▲ - υποδηλώνει τα μέρη που περιλαμβάνονται στο υποσύστημα

Παρακαλούμε συμπληρώστε κατά την ώρα της εγκατάστασης για μελλοντική αναφορά.

Αρ. Μοντέλου - _____
Αρ. σειράς - _____
Επιλογές Μηχανήματος - _____
Εκπ. πωλήσεων - _____
Τηλ. εκπροσώπου πωλήσεων - _____
Αριθμός πελάτη - _____
Ημερομηνία εγκατάστασης - _____

HU

HOGYAN RENDELJÜNK ALKATRÉSZEKET - Lásd: fenti diagramm.

Kizárólag TENNANT vagy azzal egyenértékű cserealkatrészeket használjon. Az alkatrészeket és anyagokat meg lehet rendelni az Interneten keresztül, vagy telefonon, faxon és e-mailben.

A pontos szállítás érdekében kövesse az alábbi lépéseket.

1. **(A)** Adja meg a gép típusát.
2. **(B)** Az adatcímke alapján adja meg a gép gyártási számát.
3. **(C)** Ügyeljen arra, hogy a megfelelő gyártási számot válassza ki az alkatrészlistáról.
4. Adja meg a rendelési számot és a mennyiséget. A rendeléshez ne az oldalszámot vagy a hivatkozási számot használja.
5. Adja meg a nevét, a cége nevét, az ügyfélazonosító számát, a számlázási és szállítási címét, a telefonszámát és a rendelési számot.
6. Adjon részletes szállítási utasításokat.

(D) ▽ - a jel csomagra utal
▲ - a jel a csomagban található alkatrészekre utal

A későbbi visszakeresések érdekében kérjük, hogy a rovatokat az első üzembehelyezéskor töltse ki.

Típusszám - _____
Gyártási szám. - _____
A gép felszereltsége - _____
Kereskedelmi képviselő - _____
Kereskedelmi képviselő telefonszáma - _____
Ügyfél azonosító száma - _____
Üzembehelyezés dátuma - _____

IT

COME ORDINARE LE PARTI - Vedere schema precedente.

Utilizzare solo ricambi forniti da TENNANT o equivalenti. Ricambi e forniture possono essere ordinati online, per telefono, via fax o per posta elettronica.

Per ottenere una consegna rapida, seguire i passaggi indicati di seguito.

1. **(A)** Identificare il modello della macchina.
2. **(B)** Identificare il numero di serie della macchina dall'etichetta dei dati.
3. **(C)** Utilizzare il numero di serie corretto presente nell'elenco delle parti di ricambio.
4. Identificare numero di parte e quantità. Non ordinare per numero di pagina o di riferimento.
5. Fornire nome del contatto, nome della società, numero di ID cliente, indirizzo di fatturazione e di spedizione, numero di telefono e numero di ordine di acquisto.
6. Fornire istruzioni dettagliate per la spedizione.

(D) ▽ - identifica un gruppo
▲ - identifica parti comprese in un gruppo

Compilare il modulo al momento dell'installazione per poterlo consultare in futuro in caso di necessità.

N. Modello - _____
N. Serie - _____
Opzioni della macchina - _____
Venditore - _____
Tel. venditore - _____
Numero ID cliente - _____
Data di installazione - _____

JP

パーツの発注方法 ?上記の図を参照してください

TENNANT社製のパーツまたは同等品のみをお使いください。
パーツやサプライ品のご注文は、オンライン、電話、FAX、または手紙でお願いいたします。
確実にお届けできるように、以下の情報お知らせください。

1. **(A)** 製品のモデル名をお知らせください。
2. **(B)** 製品のデータラベルに印刷されているシリアル番号をお知らせください。
3. **(C)** パーツリストを参照して、シリアル番号が正しいかご確認ください。
4. パーツ番号と数量をお知らせください。マニュアル/カタログのページ番号や参照番号でのご注文はご遠慮ください。
5. お客様のお名前、会社名、顧客ID番号、請求/発送先住所、電話番号、注文書番号をお知らせください。
6. 発送に関するご希望があれば、明記してください。

(D) ∇ - アセンブリを示します
▲ - アセンブリに含まれるパーツを示します

後日確認できるように、設置時に記入してください。

モデルNo. - _____
シリアルNo. - _____
製品のオプション- _____
販売代理店 - _____
販売代理店の電話番号 - _____
顧客ID番号 - _____
設置日 - _____

LT

KAIP UŽSISAKYTI DALIS - žr. diagramà viršuje

Naudokite tik "Tennant" kompanijos tiekiamas arba lygiavertes joms dalis. Dalis galite užsisakyti internetu, telefonu, faksu bei elektroniniu paštu.

Kad užsakymas būtų greitai įvykdytas, laikykitės išvardytų taisyklių.

1. **(A)** Nurodykite mašinos modelį.
2. **(B)** Norodykite mašinos serijos numerį, kurį rasite ant duomenų žymės.
3. **(C)** Įsitikinkite, kad nurodomas tikslus serijos numeris iš dalių sàrašo.
4. Nurodykite dalies numerį ir reikiamà kiekį. Neužsakinėkite pagal puslapius ar nuorodos numerius.
5. Nurodykite savo vardà, kompanijos pavadinimà, kliento ID numerį, sàskaitos išrašymo ir vežimo adresà, telefono numerį ir pirkimo užsakymo numerį.
6. Nurodykite išsamias gabenimo instrukcijas.

(D) ∇ - žymi sistemà
▲ - nurodo sistemos dalis

Prašome užpildyti montavimo metu, siekiant gauti informacijà ateityje.

Modelio nr. - _____
Serijos nr. - _____
Mašinos parinktys - _____
Prekybos atstovas - _____
Komivojažieriaus tel. nr. - _____
Pirkėjo ID numeris - _____
Sumontavimo data - _____

LV

KĀ PASŪTĪT REZERVES DETAĻAS - Skat. diagrammu iepriekš

izmantojiet tikai TENNANT Company piegādātās vai tām līdzvērtīgas rezerves detaļas. Daļas un piegādi var pasūtīt internetā, pa tālruni, pa faksu vai pastu.

Lai nodrošinātu savlaicīgu piegādi, sekojiet zemāk aprakstītajiem soļiem.

1. **(A)** Nosakiet mašīnas modeli.
2. **(B)** Nosakiet mašīnas sērijas numuru uz tehnisko datu uzlīmes.
3. **(C)** Pārliecinieties, ka tiek uzrakstīts attiecīgais sērijas numurs no detaļu saraksta.
4. Nosakiet detaļas numuru un skaitu. Veicot pasūtījumus neatsaucieties uz lappušu vai norādes numuriem.
5. Uzrakstiet savu vārdu, uzņēmuma nosaukumi, klienta identitātes numuru, adresi rēķina piesūtīšanai un piegādei un pirkuma pasūtījuma numuru.
6. Sniedziet detalizētu informāciju par piegādi.

(D) ∇ - nosaka ierīci i
▲ - nosaka detaļas, kas ir komplektā ar ierīci

Veicot uzstādīšanu, lūdzam pierakstīst attiecīgo informāciju izmantošanai turpmāk.

Modeļa Nr. - _____
Sērijas Nr. - _____
Iekārtas papildaprīkojums- _____
Pārdošanas pārst. - _____
Pārdošanas pārst. tālr. Nr. - _____
Klienta identitātes numuru- _____
Uzstādīšanas datums- _____

NL

HOE ONDERDELEN TE BESTELLEN - Zie schema hierboven.

Gebruik alleen onderdelen die door TENNANT Company zijn geleverd of soortgelijke onderdelen. Onderdelen en voorraden kunnen online, per telefoon, fax of schriftelijk besteld worden.

Volg de stappen hieronder om een juiste levering te garanderen.

1. **(A)** Bepaal het machinemodel.
2. **(B)** Lees het serienummer van de machine af van het gegevenslabel.
3. **(C)** Zorg dat het juiste serienummer wordt gebruikt uit de onderdelenlijst.
4. Bepaal het artikelnummer en het aantal. Bestel niet aan de hand van pagina's of referentienummers
5. Geef uw naam, bedrijfsnaam, klantnummer, factuur- en leveringsadres, telefoonnummer en bestelnummer op.
6. Geef gedetailleerde leveringsinstructies op.

(D) ∇ - geeft een eenheid aan
▲ - geeft de onderdelen van de eenheid aan

Vul tijdens installatie de onderstaande gegevens in voor eventueel toekomstig gebruik.

Modelnr. - _____
Serienr. - _____
Machine- opties - _____
Verkoopvert. - _____
Telnr. verkoopvert. - _____
Klantnummer - _____
Installatiedatum - _____

NO

HVORDAN BESTILLE DELER - Se diagram over.

Bruk kun deler levert av TENNANT Company eller ekvivalente deler. Deler og forsyninger kan bestilles online, per telefon, per faks eller per post.

Følg trinnene under for å sikre rask levering.

1. **(A)** Angi maskinmodellen.
2. **(B)** Angi maskinens serienummer fra typeskiltet.
3. **(C)** Forsikre deg om at korrekt serienummer brukes fra delelisten.
4. Angi delenummer og antall. Bestill ikke ut fra side- eller referansenumre.
5. Angi ditt navn, firmanavn, kunde- ID- nummer, fakturerings- og forsendelsesadresse, telefonnummer og innkjøpsordrenummer.
6. Angi detaljerte forsendelsesinstruksjoner.

(D) ▽ - angir en delegruppe
▲ - angir deler inkludert i en delegruppe

Fyll ut ved installasjonstidspunkt for fremtidig bruk.

Modellnr. - _____
Serienr.. - _____
Maskinens tillegg - _____
Salgsrep. - _____
Salgsrep. telefonnr. - _____
Kunde- ID- nummer - _____
Installasjonsdato - _____

PL

JAK ZAMAWIAĆ CZĘŚCI - patrz schemat powyżej.

Należy używać wyłącznie części dostarczanych przez firmę TENNANT Company lub równoważnych. Części i dostawy mogą być zamawiane online, przez telefon, faksem lub pocztą.

Aby zapewnić szybką dostawę, należy przestrzegać następujących wskazówek.

1. **(A)** Określić model maszyny.
2. **(B)** Określić numer seryjny maszyny znajdujący się na tabliczce znamionowej.
3. **(C)** Odszukać ten numer seryjny w wykazie części.
4. Określić numer części i ilość. Nie zamawiać na podstawie numeru strony lub liczby porządkowej wykazu.
5. Podać swoje nazwisko, nazwę firmy, numer identyfikacyjny klienta, adres dostawy i dostarczenia rachunku, numer telefonu i numer zamówienia zakupu.
6. Podać dokładne instrukcje dotyczące dostawy.

(D) ▽ - oznacza zespół
▲ - oznacza część w zespole

Prosimy wpisać datę instalacji do późniejszego wykorzystania.

Nr modelu- _____
Nr seryjny - _____
Opcje maszyny - _____
Przedst. sprzedaży - _____
Nr tel. przedst. sprzed. - _____
Nr ident. klienta - _____
Data instalacji - _____

PTG

COMO ENCOMENDAR PEÇAS - Consulte o diagrama acima.

Utilize apenas peças fornecidas pela TENNANT Company ou equivalentes. As peças e consumíveis podem ser encomendados online, por telefone, fax ou correio.

Siga os passos abaixo para garantir uma entrega rápida.

1. **(A)** Identifique o modelo da máquina.
2. **(B)** Identifique o número de série da máquina que se encontra na etiqueta de dados.
3. **(C)** Certifique- se de que usa o número de série correcto da lista de peças.
4. Identifique o número de produto e a quantidade. Não encomende através de números de página ou de referência.
5. Forneça o seu nome, o nome da empresa, o número de ID do cliente, os endereços de facturação e entrega, o número de telefone e o número da nota de encomenda.
6. Forneça instruções de entrega detalhadas.

(D) ▽ - identifica uma unidade
▲ - identifica peças incluídas numa unidade

Preencha na altura da instalação para futura referência.

Modelo nº - _____
Nº de série - _____
Opções da máquina - _____
Vendedor - _____
Telefone do vendedor - _____
Número de ID do cliente - _____
Data de instalação - _____

RU

КАК ЗАКАЗАТЬ ЗАПЧАСТИ - См. схему ниже.

Используйте только запчасти, поставляемые компанией TENNANT или их аналоги. Запасные части и расходные материалы можно заказать в режиме онлайн, телефоном, факсом или электронной почтой.

Для своевременной доставки следуйте описанным ниже инструкциям.

1. **(A)** Укажите модель машины.
2. **(B)** Укажите серийный номер машины, обозначенный на табличке технических данных.
3. **(C)** Удостоверьтесь, что надлежащий серийный номер перечислен в списке запчастей.
4. Укажите номер детали и нужное количество. Не используйте номера страниц или ссылок.
5. Укажите свое имя, название компании, идентификационный номер покупателя, расчетный адрес и адрес доставки, телефонный номер и номер заказа на покупку.
6. Укажите подробные сведения о доставке.

(D) ▽ - означает узел
▲ - обозначает деталь узла

Во время установки заполните, пожалуйста, эти сведения для того, чтобы ссылаться в дальнейшем.

Модель Э - _____
Серийный Э - _____
Опции машины - _____
Торговый представитель - _____
Телефон торгового представителя - _____
Идент. номер покупателя - _____
Дата установки - _____

SE

BESTÄLLNING AV RESERVDELAR - Se ovanstående schema.

Använd endast delar från Tennant Company eller likvärdiga. Delar och material kan beställas online, telefoniskt, per fax eller post.

Följ nedanstående steg för en snabb leverans.

1. **(A)** Identifiera maskinens modell.
2. **(B)** Identifiera maskinens serienummer på typskylten.
3. **(C)** Kontrollera att rätt serienummer används från dellistan.
4. Identifiera artikelnumret och mängden. Beställ inte med hjälp av sido- eller referensnummer.
5. Uppge ditt namn, företagets namn, kundens ID- nummer, faktura- och leveransadress, telefonnummer och ordernumret vid inköp.
6. Ge detaljerade transportanvisningar.

(D) ▽ - identifierar en modul
▲ - identifierar delar som ingår i en modul

Fyll i vid installation och spar för framtida bruk.

Modellnr. - _____
Serienr. - _____
Tilvalsutrustning - _____
Försäljare - _____
Försäljarens tel.nr. - _____
Kundnummer - _____
Installationsdatum - _____

SK

POSTUP PRI OBJEDNÁVANÍ ČASTÍ - Pozri vyššie uvedený diagram.

Vyu ívajte výhradne dielce dodané spoločnos ou TENNANT, alebo ich ekvivalenty. Dielce a polo ky je mo né objedna online, telefonicky, faxom, alebo poštou.

Na zabezpečenie promptného doručenia sa riaďte nasledovnými krokmi.

1. **(A)** Identifikujte model stroja.
2. **(B)** Z etikety s údajmi identifikujte sériové číslo stroja.
3. **(C)** Ubezpečte sa, e ste zadali správne sériové číslo zo zoznamu dielcov.
4. Identifikujte číslo dielu a mno stvo. Neobjednávajte pomocou čísel strán, alebo referenčných čísel.
5. Zadajte Vaše meno, meno spoločnosti, ID číslo zákazníka, fakturačnú a prepravnú adresu, telefónne číslo a objednávacie číslo dielu.
6. Uveďte podrobné prepravné pokyny.

(D) ▽ - identifikuje sadu
▲ - identifikuje časti sady

Vyplňte prosím pri inštalácii pre prípad potreby v budúcnosti.

č. modelu - _____
Sériové č. - _____
Zvláštne príslušenstvo stroja - _____
Obchodné zastúpenie - _____
Obch. zastúpenie tel. č. - _____
ID č. zákazníka - _____
Dátum inštalácie - _____

SL

NAROČANJE NADOMESTNIH DELOV - glejte zgornjo sliko.

Uporabljajte samo originalne nadomestne dele Tennant ali enakovredne dele. Dele in potrošni material lahko naročite prek spleta, po telefonu, faksu ali pošti.

Za zagotovitev čimbolj hitre dostave sledite spodnjim navodilom.

1. **(A)** Ugotovite model stroja.
2. **(B)** Na ploščici s podatki poiščite serijsko številko stroja.
3. **(C)** Poskrbite, da na seznamu nadomestnih delov poiščete pravilno serijsko številko.
4. Poiščite številko dela in potrebno količino. Pri naročilih ne navajajte strani ali referenčne številke.
5. Navedite svoje ime, ime podjetja, ID številko stranke, naslova za dostavo in izdajo računa, telefonsko številkoin številko naročila.
6. Navedite podrobna navodila za dostavo.

(D) ▽ - označuje sklop
▲ - označuje dele sklopa

Prosimo, da ob vgradnji izpolnite te podatke, da vam bodo v prihodnje na voljo.

Št. modela - _____
Serijska številka - _____
Dodatna oprema stroja - _____
Prodajni predstavnik - _____
Telefonska št. prodajnega predstavnika - _____
Številka stranke - _____
Datum vgradnje - _____

TR

PARÇALARIN SİPARİŞ EDİLMESİ - Yukarıdaki şemaya bakın.

Yalnızca TENNANT Company'den sağlanan veya eşdeğerde parçalar kullanın. Parça veya sarf malzemeleri çevrimiçi olarak, telefonla, faksla veya postayla sipariş edilebilir.

Zamanında teslimatı sağlamak için aşağıdaki adımları izleyin.

1. **(A)** Makine modelini belirtin.
2. **(B)** Veri etiketinden makine seri numarasını belirtin.
3. **(C)** Parça listesinden uygun seri numarasının kullanıldığından emin olun.
4. Parça numarasını ve miktarını belirtin. Sayfa veya referans numaralarını kullanarak sipariş vermeyin.
5. Adınızı, şirketinizin adını, müşteri kimlik numaranızı, faturalama ve sevkıyat adreslerini, telefon numarasını ve satın alma siparişi numarasını belirtin.
6. Ayrıntılı sevkıyat talimatlarını belirtin.

(D) ▽ - bir tertibatı belirtir
▲ - tertibattaki parçaları belirtir

İleri tarihlerde başvurmak için lütfen kurulum sırasında doldurun.

Model No. - _____
Seri No. - _____
Makine Seçenekleri - _____
Satış Temsilcisi - _____
Satış Temsilcisi telefon no. - _____
Müşteri Kimlik Numarası - _____
Kurulum Tarihi - _____

General Recommended Maintenance Items

	Ref.	Part No.	Serial Number	Description	Qty.
▽		9004505	(000000-)	Maint Kit, 400Hr, Dsl [M30]	1
▲		369746	(000000-)	Element, Fltr, Air [Dn]	1
▲		55849	(000000-)	Element, Fltr, Oil, Spin- On [Ku]	1
▲		1017126	(000000-)	Element, Fltr, Fuel [Dn]	1
▲		393244	(000000-)	Belt, V, 42.0L [Hc41]	1
▲		31613	(000000-)	Strainer, Hyd, 025gpm 100mesh 03psi	1
▲		1021579	(000000-)	Filter Assy, Hyd, 10mic	1
		1048295AM	(000000-)	Filter, Panl, Syn, 4.2 X 20.0 X 30.0	1
		1027290	(000000-)	Filter, Soltn, 20mesh, Pm12 3.1d 02.6l	1
		87866	(000000-)	Key, Ignition [Set Of 2]	1
		20833	(000000-)	Wheel, 03.0d 1.38w 0.50b	2
		372571	(000000-)	Belt, V, 42.5l [3v]	1
		1024586	(000000-)	Side Door Inner Skirt	2
		1019295	(000000-)	Side Door Outer Skirt	2
		1033269	(000000-)	Front Tabbed Skirt	1
		1033549	(000000-)	Rear Skirt	1
		1033548	(000000-)	Rear Recirculation Flap	1
		1035067	(000000-)	Linard Front Squeegee - Std.	1
		1035052	(000000-)	Linatex Rear Squeegee - Std.	1
		83874	(000000-)	Linatex Rear Squeegee End Gasket	2
		1031011	(000000-)	Linatex Side Squeegee	2
		1025005	(000000- 001278)	Linatex Side Brush Squeegee	1
		1046980	(001279- 004481)	Blade, Sqge, Side Brush, Linatex	1
		1073414	(004482-)	Blade, Sqge, Side Brush, Linatex	1
		1047238	(001279- 004481)	Blade, Sqge, Side Brush, Linatex	1
		1073415	(004482-)	Blade, Sqge, Side Brush, Linatex	1
		1038681	(000000-)	Urethane Front Squeegee	1
		1038680	(000000-)	Urethane Rear Squeegee	1
		1031823	(000000-)	Urethane Side Squeegee	2
		1027716	(000000- 001278)	Urethane Side Brush Squeegee	1
		1059091	(001279- 004481)	Blade, Sqge, Side Brush, Urethane	1
		1073413	(004482-)	Blade, Sqge, Side Brush, Urethane	1
		1059092	(001279- 004481)	Blade, Sqge, Side Brush, Urethane	1
		1073416	(004482-)	Blade, Sqge, Side Brush, Urethane	1
		16411	(000000-)	Paint, Airdry, Off- White, 12oz (Not Europe)	1
		16412	(000000-)	Paint, Airdry, Teal, 12oz, Solid (Not Europe)	1
		377540	(000000-)	Paint, Airdry, Blk, 12oz (Not Europe)	1
		377538	(000000-)	Paint, Airdry, Gray, 12oz [Enamel] (Not Europe)	1
		377537	(000000-)	Paint, Airdry, Iron Gray,12oz[Pwdr Coat] (Not Europe)	1
		1057710	(000000-)	Oil, Hyd [El, Iso 100, 01gal]	1
		1057711	(000000-)	Oil, Hyd [El, Iso 100, 05gal]	1
		1069019	(000000-)	Oil, Hyd [El, Iso 68, 01gal]	1
		1069020	(000000-)	Oil, Hyd [El, Iso 68, 05gal]	1
		1057707	(000000-)	Oil, Hyd [El, Iso 32, 01gal]	1
		1057708	(000000-)	Oil, Hyd [El, Iso 32, 05gal]	1
		99321	(000000-)	Oil, Hydraulic 68 [20l] (CE ONLY)	1

SECTION 2

Contents **Page**

Fig. 1 - Brushes, Replacement, Scrub Head 2-3
Fig. 2 - Brushes, Replacement, Side Brush 2-4
Fig. 3 - Main Frame Group 2-6
Fig. 4 - Operator Station 2-8
Fig. 5 - Operator Station Insulation Group 2-10
Fig. 6 - Instrument Panel Group 2-12
Fig. 7 - Seat Group 2-14
Fig. 8 - Steering Group 2-16
Fig. 9 - Front Cover Group 2-18
Fig. 10 - Engine Cover Group 2-20
Fig. 11 - Engine and Mount Group Diesel . . 2-22
Fig. 12 - Engine Fuel Tank Group, Diesel . . 2-24
Fig. 13 - Engine Fuel Line Group, Diesel . . 2-26
Fig. 14 - Engine Air Cleaner Group 2-28
Fig. 15 - Engine Alternator Group, Diesel . . 2-30
Fig. 16 - Engine Muffler Group, Diesel 2-32
Fig. 17 - Engine Radiator Group, Diesel (000000- 001249) 2-34
Fig. 18 - Engine Radiator Group, Diesel (001250- 004037) 2-36
Fig. 19 - Engine Radiator Group, Diesel (004038-) 2-38
Fig. 20 - Engine Radiator Hose Group, Diesel (001250-) 2-40
Fig. 21 - Battery and Electrical Group 2-42
Fig. 22 - Wheel Group, Front Drive 2-44
Fig. 23 - Wheel and Brake Group 2-46
Fig. 24 - Brake Pedal Linkage Group 2-48
Fig. 25 - Directional Pedal and Linkage Group 2-50
Fig. 26 - Hopper Lift Arms Group 2-52
Fig. 27 - Hopper and Debris Screen Group 2-54
Fig. 28 - Hopper Cover and Dust Filter Group 2-56
Fig. 29 - Hopper Bumper Group 2-58
Fig. 30 - Hopper Dump Door Group 2-60
Fig. 31 - Brush Drive Group, Left Side 2-62
Fig. 32 - Brush Drive Group, Right Side . . . 2-64
Fig. 33 - Brush Head Lift Group 2-66
Fig. 34 - Brush Head Skirt Group 2-68
Fig. 35 - Squeegee Lift Group, Rear 2-70
Fig. 36 - Squeegee Group, Rear 2-72
Fig. 37 - Squeegee Linkage Group, Rear . . 2-74
Fig. 38 - Squeegee Group, Right Side 2-76
Fig. 39 - Squeegee Lift Group, Right Side . 2-78
Fig. 40 - Squeegee Group, Left Side 2-80
Fig. 41 - Squeegee Lift Group, Left Side . . 2-82
Fig. 42 - Solution Tank Group 2-84
Fig. 43 - Solution Tank Drain Group 2-88
Fig. 44 - Solution Control Group 2-90
Fig. 45 - Recovery Tank Group 2-92
Fig. 46 - Recovery Tank Drain Group 2-94
Fig. 47 - Vacuum Fan Group, Scrubbing (000000- 004454) 2-96
Fig. 48 - Vacuum Fan Group, Scrubbing (004455-) 2-98
Fig. 49 - Vacuum Fan Group, Sweeping . . 2-100
Fig. 50 - Hydraulic Schematic (000000- 001462) 2-102
Fig. 51 - Hydraulic Schematic (001463-) 2-104
Fig. 52 - Hydraulic Hose Group, Steering and Propel 2-106
Fig. 53 - Hydraulic Hose Group, Pump and Vacuum Fan (000000- 004454) 2-108
Fig. 54 - Hydraulic Hose Group, Pump and Vacuum Fan (004455-) . 2-110
Fig. 55 - Hydraulic Hose Group, Brush and Hopper 2-112
Fig. 56 - Hydraulic Hose Group, Squeegee Lift 2-114
Fig. 57 - Hydraulic Pumps Group 2-116
Fig. 58 - Hydraulic Cooler and Tubes Group2-118
Fig. 59 - Hydraulic Reservoir Group 2-120
Fig. 60 - Hydraulic Valve Group 2-122
Fig. 61 - Electrical Schematic, (000000- 001544) 2-124
Fig. 62 - Electrical Schematic, (001545- 003999) 2-131
Fig. 63 - Electrical Schematic, (004000-) 2-138
Fig. 64 - Electrical Schematic, Diesel Engine Harness 2-145
Fig. 65 - Electrical Wire Harness Group, Main 2-146
Fig. 66 - Electrical Wire Harness Group, Headlight 2-153
Fig. 67 - Electrical Wire Harness Group, Hopper 2-154
Fig. 68 - Electrical Wire Harness Group, Hopper Cover 2-156
Fig. 69 - Electrical Wire Harnesses Group, Diesel Engine 2-158
Fig. 70 - Label Group 2-160

Fig. 1 - Brushes, Replacement, Scrub Head

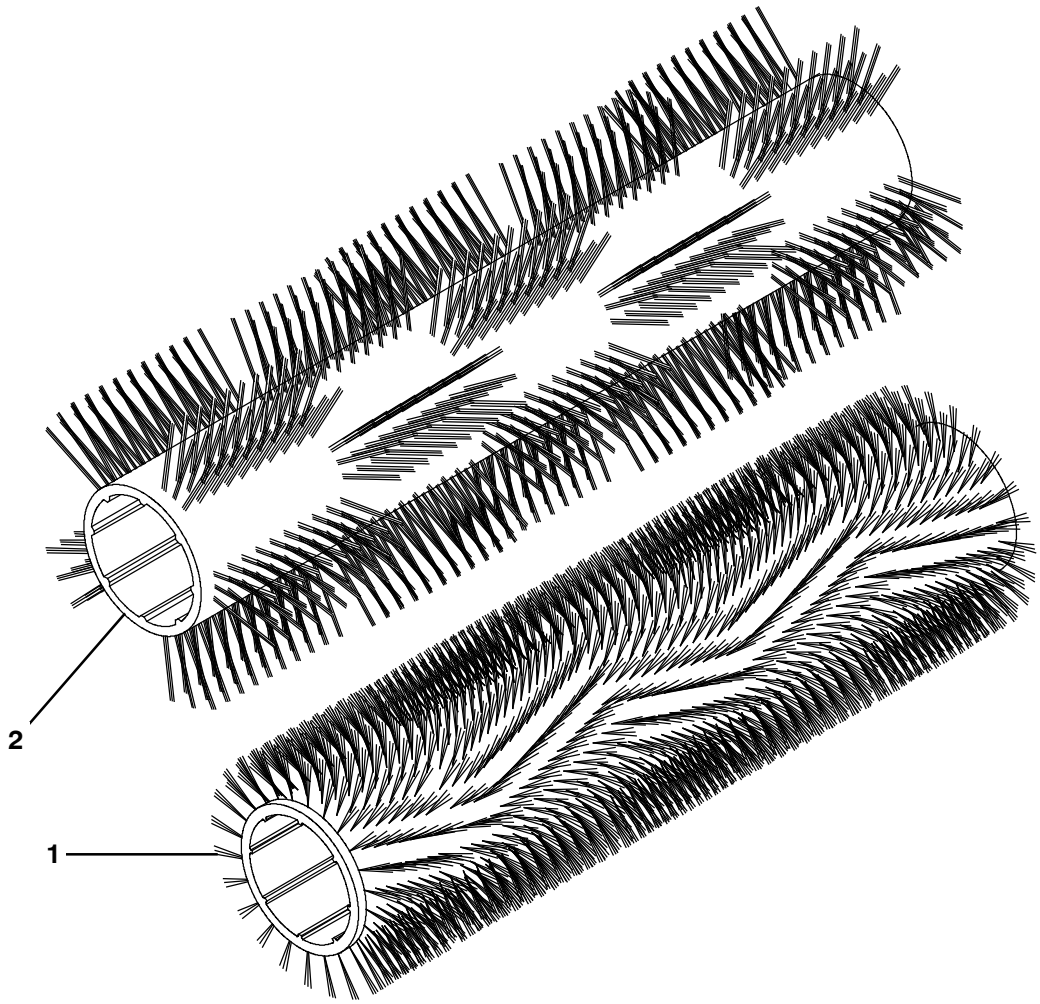

354408 - M30

Ref.	Part No.	Serial Number	Description	Qty.
1	1033375	(000000-)	Brush, Sweep / Scrub, 48L, 24 Sr, Polypropylene	2
1	1033372	(000000-)	Brush, Sweep / Scrub, 48L, 24 Sr,Super Abrasive	2
1	1033246	(000000-)	Brush, Sweep / Scrub, 48L, 24 Sr, Polyester	2
1	1033374	(000000-)	Brush, Sweep / Scrub, 48L, 24 Sr, Heavy Duty Polypropy-lene	2
2	1038430	(000000-)	Brush, Sweep / Scrub, 48L, Wndw, Polypropylene	2
2	1059641	(000000-)	Brush, Sweep / Scrub, 48L, Wndw, Super Abrasive	2

Fig. 2 - Brushes, Replacement, Side Brush

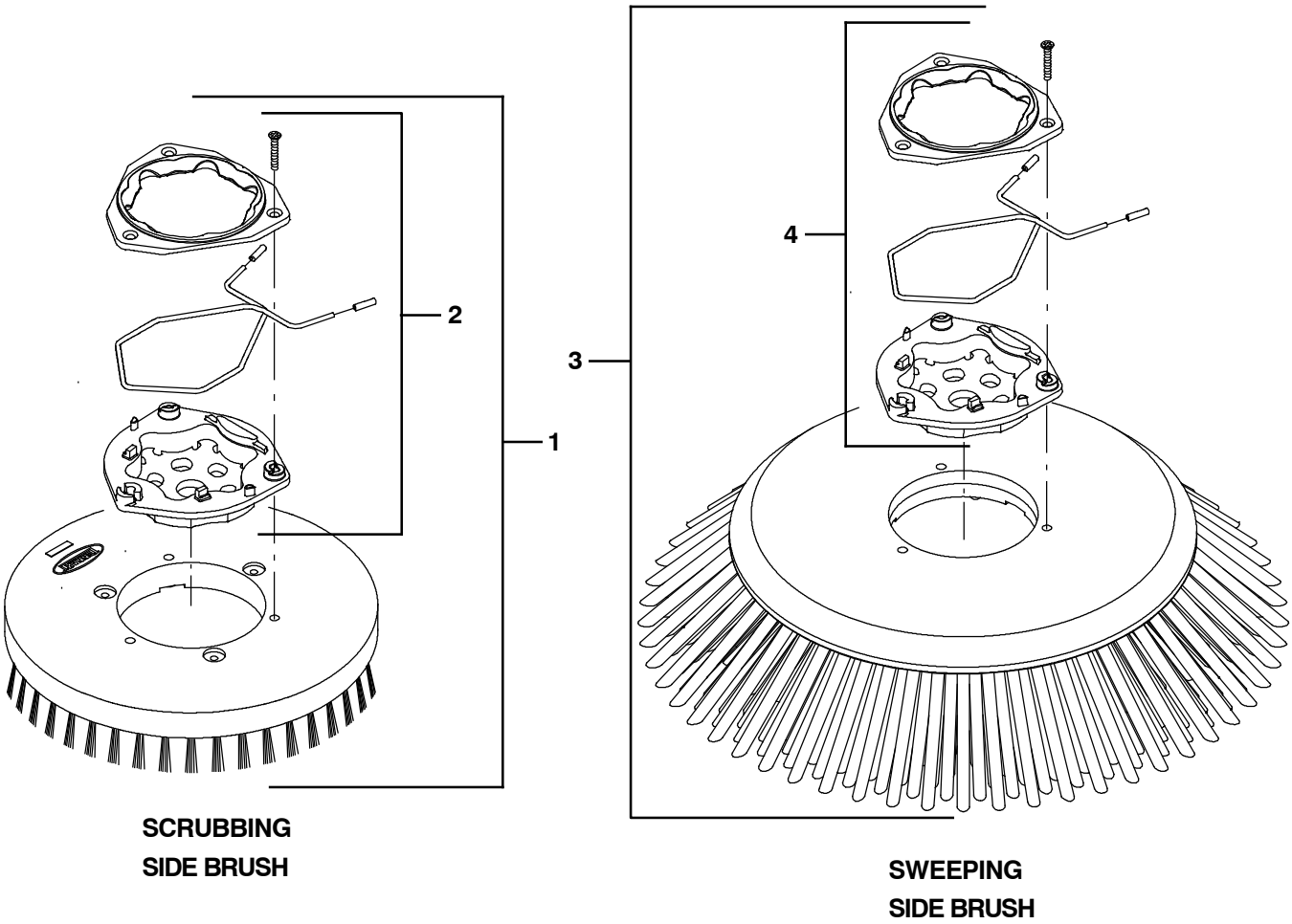

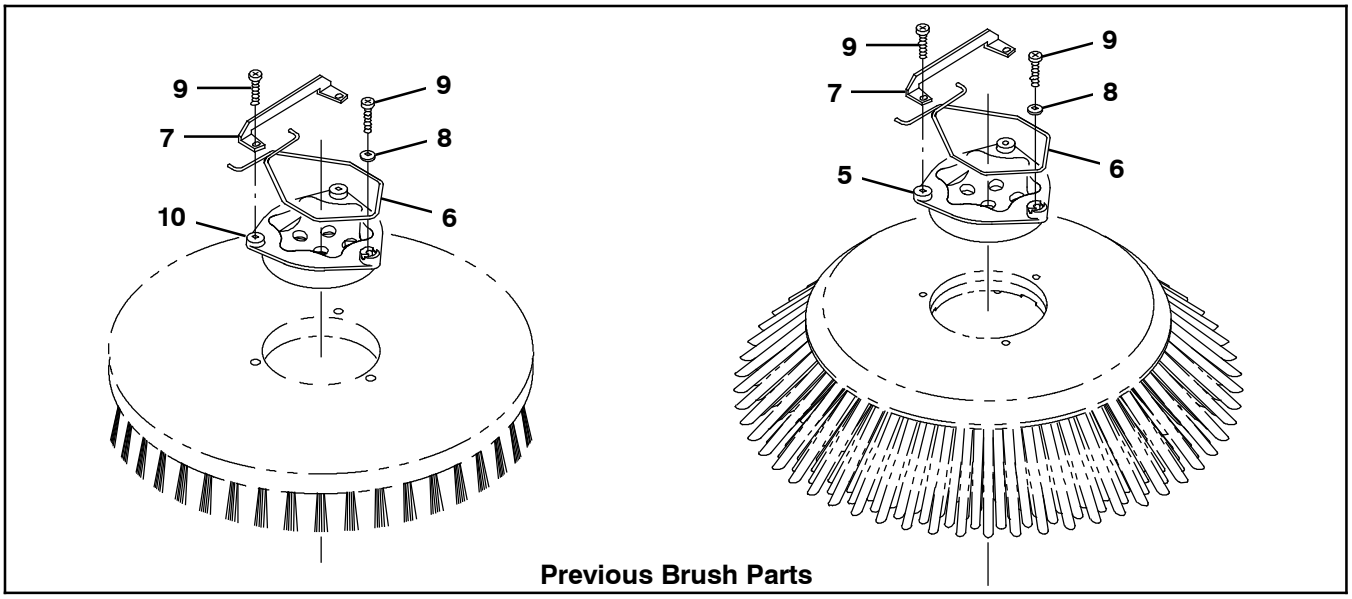

Previous Brush Parts

354584

Fig. 2 - Brushes, Replacement, Side Brush

	Ref.	Part No.	Serial Number	Description	Qty.
▽	1	1220235	(000000-)	Brush Assy, Disk, Scb, 16.0d, Nylon	1
▲	2	9014662	(000000-)	Brush Kit, Hub Assy, Drive, Ci [Hdpe In]	1
▽	1	1220236	(000000-)	Brush Assy, Disk, Scb, 16.0d, Heavy Duty Polypropylene	1
▲	2	9014662	(000000-)	Brush Kit, Hub Assy, Drive, Ci [Hdpe In]	1
▽	1	1221543	(000000-)	Brush Assy, Disk, Scb, 16.0d, Super Abrasive	1
▲	2	9014662	(000000-)	Brush Kit, Hub Assy, Drive, Ci [Hdpe In]	1
▽	3	1220185	(000000-)	Brush Assy, Disk, Swp, 24.0d, Polypropylene	1
▲	4	9014666	(000000-)	Brush Kit, Hub Assy, Drive, Ci [Uhmw]	1
				Previous Brush Parts	
	5	1017368	(000000-)	Hub, Drive, Brush, Disk, 3hole 5.8bc	1
	6	14838	(000000-)	Spring, Wir, 0.16d, Brush Retaining	1
	7	24299	(000000-)	Bracket, Retainer, Spring	1
	8	01684	(000000-)	Washer, Flat, 0.27b 0.69d .05, Ss	1
	9	32746	(000000-)	Screw, Pan, Phl, M6 X 1.00 X 35, Ss	3
	10	15539	(000000-)	Hub, Drive, Brush, Disk, 3hole 5.8bc[6t]	1
		1042500	(000000-)	Brush Assy, Disk, Scrub, 16.0 D, Heavy Duty Polypropylene (Replaced by 1220236)	1
		1042504	(000000-)	Brush Assy, Disk, Scrub, 16.0 D, Super Abrasive (Replaced by 1221543)	1
		1042499	(000000-)	Brush Assy, Disk, Scrub, 16.0D, Nylon (Replaced by 1220235)	1
		1027688	(000000-)	Brush Assy, Disk, Sweep, 24.oD, Polypropylene (Replaced by 1220185)	1

Fig. 3 - Main Frame Group

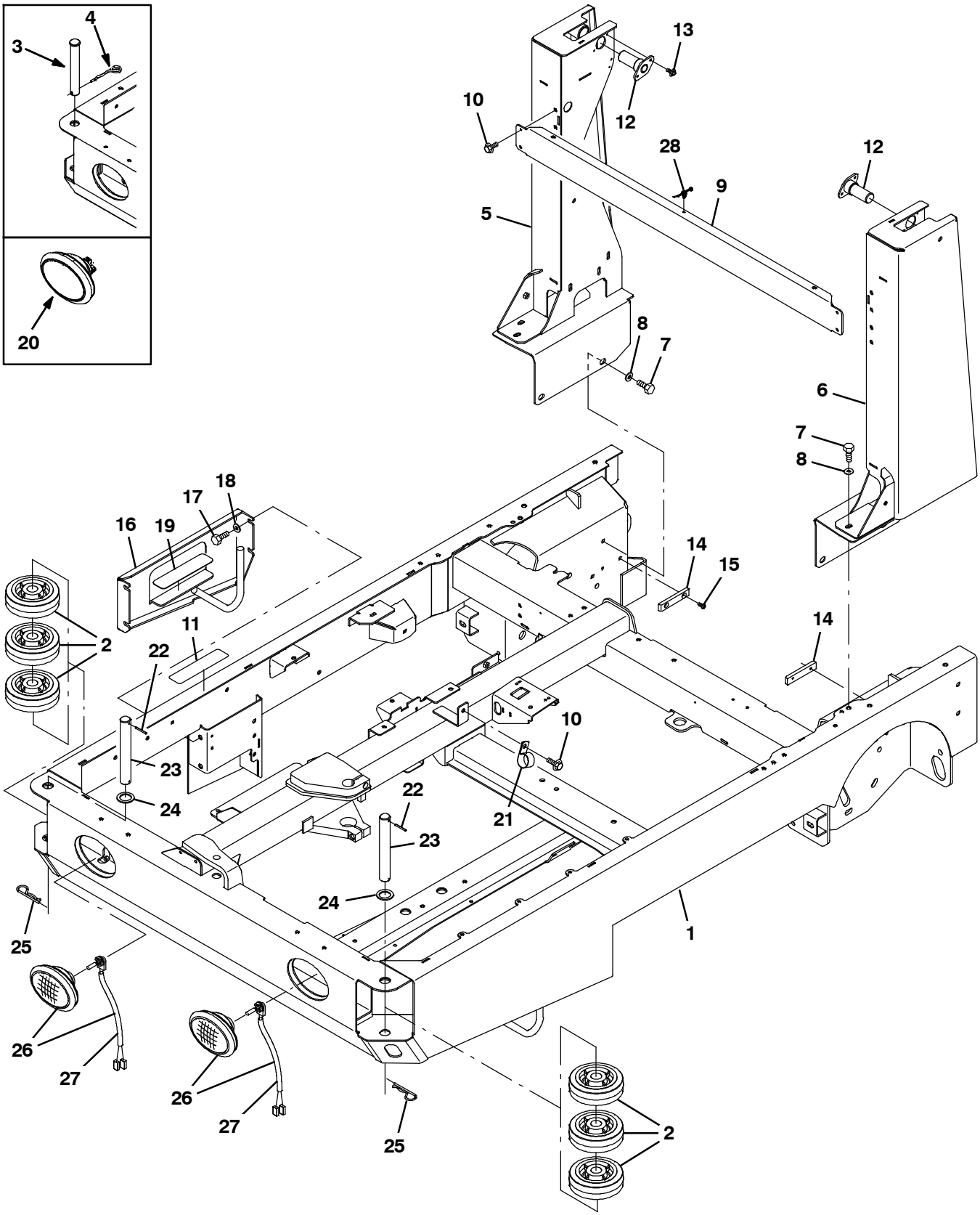

354600

Fig. 3 - Main Frame Group

	Ref.	Part No.	Serial Number	Description	Qty.
	1	9003987	(000000-)	Frame Wldt, Main, Replmt [M30]	1
	2	1060130	(000000-)	Wheel, 06.0D 2.00W 1.19B, Gray Rbr	6
	3	9006334	(000000- 001248)	Pin Kit, Wheel, Ci [M20/T20/M30]	2
	4	761490	(000000- 001248)	Pin, Cotter, hair, Dbl	2
	5	9003988	(000000-)	Tower Wldt, Lift, Rh, Replmt [M30]	1
	5	9004991	(000000-)	Tower Wldt, Lift, Rh, Replmt, TJ (Japan Only)	1
	5	9004992	(000000-)	Tower Wldt, Lift, Rh, Replmt, CE (CE Only)	1
	6	9003989	(000000-)	Tower Wldt, Lift, Lh, Replmt [M30]	1
	6	9004989	(000000-)	Tower Wldt, Lift, Lh, Replmt, TJ (Japan Only)	1
	6	9004990	(000000-)	Tower Wldt, Lift, Lh, Replmt, Ce (CE Only)	1
	7	39283	(000000-)	Screw, Hex, M10 X 1.50 X 25, 8.8	10
	8	32492	(000000-)	Washer, Flat, 0.38, Std	10
	9	1032174	(000000-)	Channel, Upper, Tower, Lift	1
	10	1037346	(000000-)	Screw, Hex, M8 X 1.25 X 25, 9.8, Sems	5
	11	58819	(000000-)	Tread, Non- Skid, 03.0w 11.6l	1
	12	1019251	(000000-)	Pin Wldt, Pivot, Hppr	2
	13	361339	(000000-)	Screw, Hex, M6 X 1.00 X 16, Fmg	4
	14	1024648	(000000-)	Block, Centering	2
	15	09164	(000000-)	Screw, Pan, Phl, M6 X 1.00 X 20, 4.8	4
	16	1027916	(000000-)	Panel Wldt, Filler	1
	17	12317	(000000-)	Screw, Hex, M10 X 1.50 X 30, Ss	4
	18	01686	(000000-)	Washer, Flat, 0.44b 1.00d .08, Ss	4
	19	363458	(000000-)	Tread, Non- Skid, 01.9w 08.0l	1
▽	20	1019225	(000000- 001486)	Headlight, 12vdc, 27watt, 2.1a, Oval (Rpl by 1060942)	2
▲		1031826	(000000- 001486)	Lamp, 12vdc [Speaker]	1
▲		1031827	(000000- 001486)	Receptacle, Lamp [Speaker]	1
	21	53466	(000000-)	Clamp, Cable, Stl, 1.50d X 1.00w, 1hole	1
	22	23146	(001249-)	Pin, Roll, .187d X 1.62l, .187/.192	2
	23	1053838	(001249-)	Pin, 30mmd X 215mml	2
	24	1062566	(001249-)	Washer, Flat, 1.26B 1.88D .13, Stl, Pl	2
	25	34411	(001249-)	Pin, Cotter, Hair, 1.00d .178 Wir	2
▽	26	1060942	(001487-)	Headlight, 12Vdc, Oval, Halogen	2
▲	27	9007513	(001487-)	Lamp, Halogen [Speaker]	1
	28	1210807	(000000-)	Wire, Tie [W/.25” Fir Tree Clip]	1

Fig. 4 - Operator Station

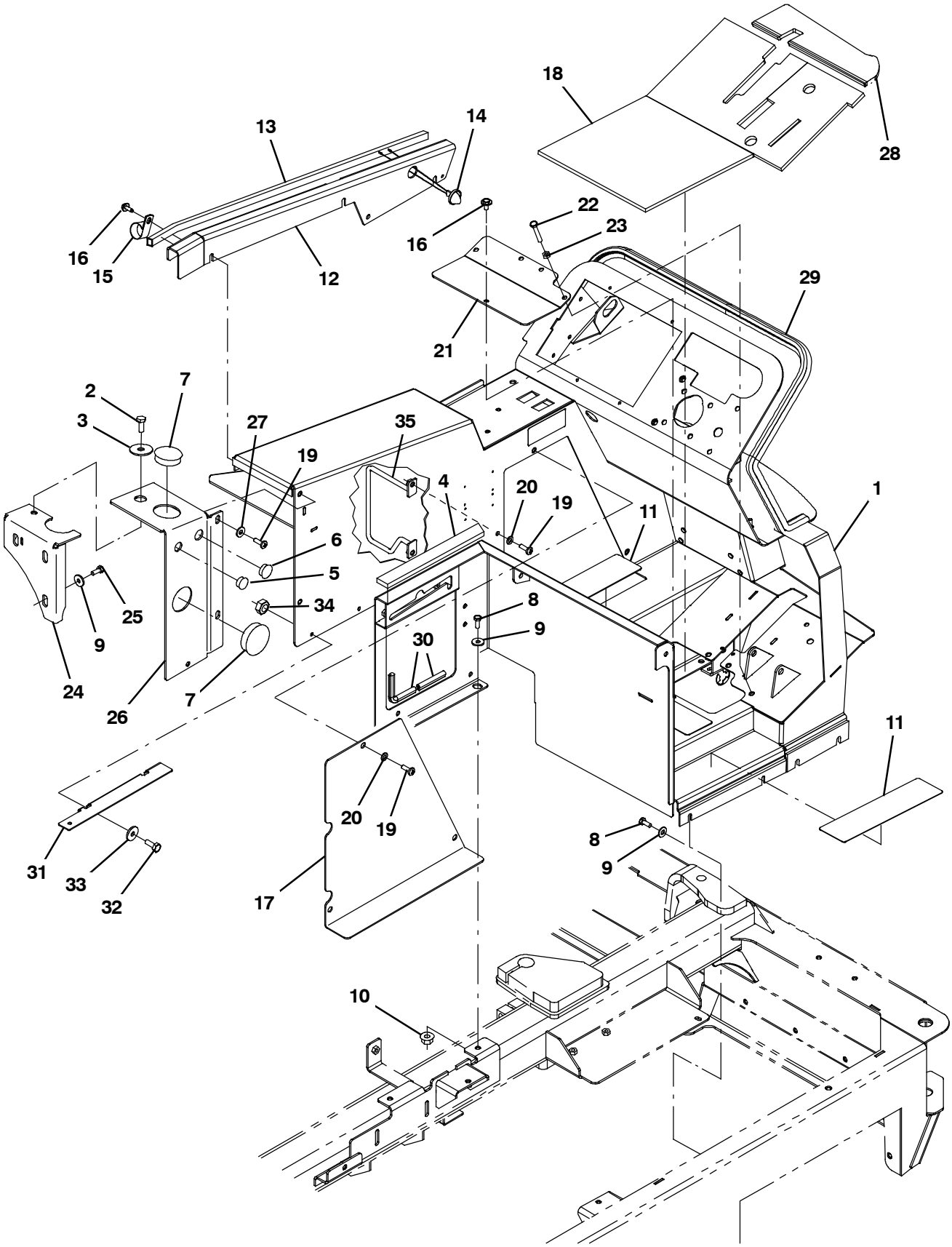

354601 - D

Fig. 4 - Operator Station

Ref.	Part No.	Serial Number	Description	Qty.
1	9002410	(000000-)	Panel Wldt, Dsl, Replmt	1
1	9002383	(000000-)	Panel Wldt, Dsl W/ Es, Replmt	1
1	9002382	(000000-)	Panel Wldt, Dsl, Replmt [W/Fast]	1
1	9003424	(000000-)	Panel Wldt, Dsl, Replmt, Tj	1
1	9003427	(000000-)	Panel Wldt, Dsl, Replmt, Tj[W/Fast]	1
1	9003430	(000000-)	Panel Wldt, Dsl, Replmt, Tj, W/ Es	1
1	9003437	(000000-)	Panel Wldt, Dsl, Replmt, Ce[M&T20]	1
1	9003438	(000000-)	Panel Wldt, Dsl, Replmt, Ce[W/Fast]	1
1	9003439	(000000-)	Panel Wldt, Dsl, Replmt, Ce, W/ Es	1
2	39283	(000000-)	Screw, Hex, M10 X 1.50 X 25, 8.8	1
3	04414	(000000-)	Washer, Flat, 0.53b 1.88d .12, Stl, Pl	1
4	1030585	(000000-)	Seal, Afmkt, Bulb, 90, 0.75d F/11ga 01ft	1
5	82727	(000000-)	Plug, Hole, Rnd, 0.88h .03- .12, Blk Nyl	1
6	01493	(000000-)	Plug, Hole, Rnd, 1.00h .03- .12, Blk Nyl	1
7	1030017	(000000-)	Plug, Hole, Rnd, 2.50h .03- .25, Blk Nyl	2
8	16931	(000000-)	Screw, Hex, M8 X 1.25 X 20, 8.8	6
9	1017218	(000000-)	Washer, Flat, 0.32b 1.00d .12, Ss	9
10	07791	(000000-)	Nut, Hex, Flng, M8 X 1.25	1
11	58819	(000000-)	Tread, Non- Skid, 03.0w 11.6l	2
12	1034762	(000000-)	Panel, Adj	1
13	1030593	(000000-)	Seal, Afmkt, Bulb, 90, 0.75d F/11ga 08ft	1
14	9004492	(000000-)	Light Assy, Panel, Side	1
15	53466	(000000-)	Clamp, Cable, Stl, 1.50d X 1.00w, 1hole	5
16	1037346	(000000-)	Screw, Hex, M8 X 1.25 X 25, 9.8, Sems	6
17	1021834	(000000-)	Panel, Access, Door	1
18	1027218	(000000-)	Mat, Floor	1
19	1031665	(000000-)	Screw, Pan, M8 X 1.25 X 25, Blk	5
20	39349	(000000-)	Washer, Flat, 0.31, Sae	3
21	1022699	(000000-)	Panel, Access, Floor	1
22	363976	(000000-)	Screw, Hex, M8 X 1.25 X 60, 8.8, Fl	1
23	39311	(000000-)	Nut, Hex, Std, M8 X 1.25	1
24	1035997	(000000-)	Bracket Wldt, Mtg, Tank	1
25	09740	(000000-)	Screw, Hex, M8 X 1.25 X 20, Ss	3
26	1033975	(000000-)	Bracket, Mtg	1
27	32491	(000000-)	Washer, Flat, 0.31, Std	2
28	1027267	(000000-)	Mat, Floor	1
29	1020904	(000000-)	Seal, Panl, Instmt	1
30	1020168	(000000-)	Molding, Afmkt, Trim, Pvc, .08 .11, 01ft	1

Fig. 5 - Operator Station Insulation Group

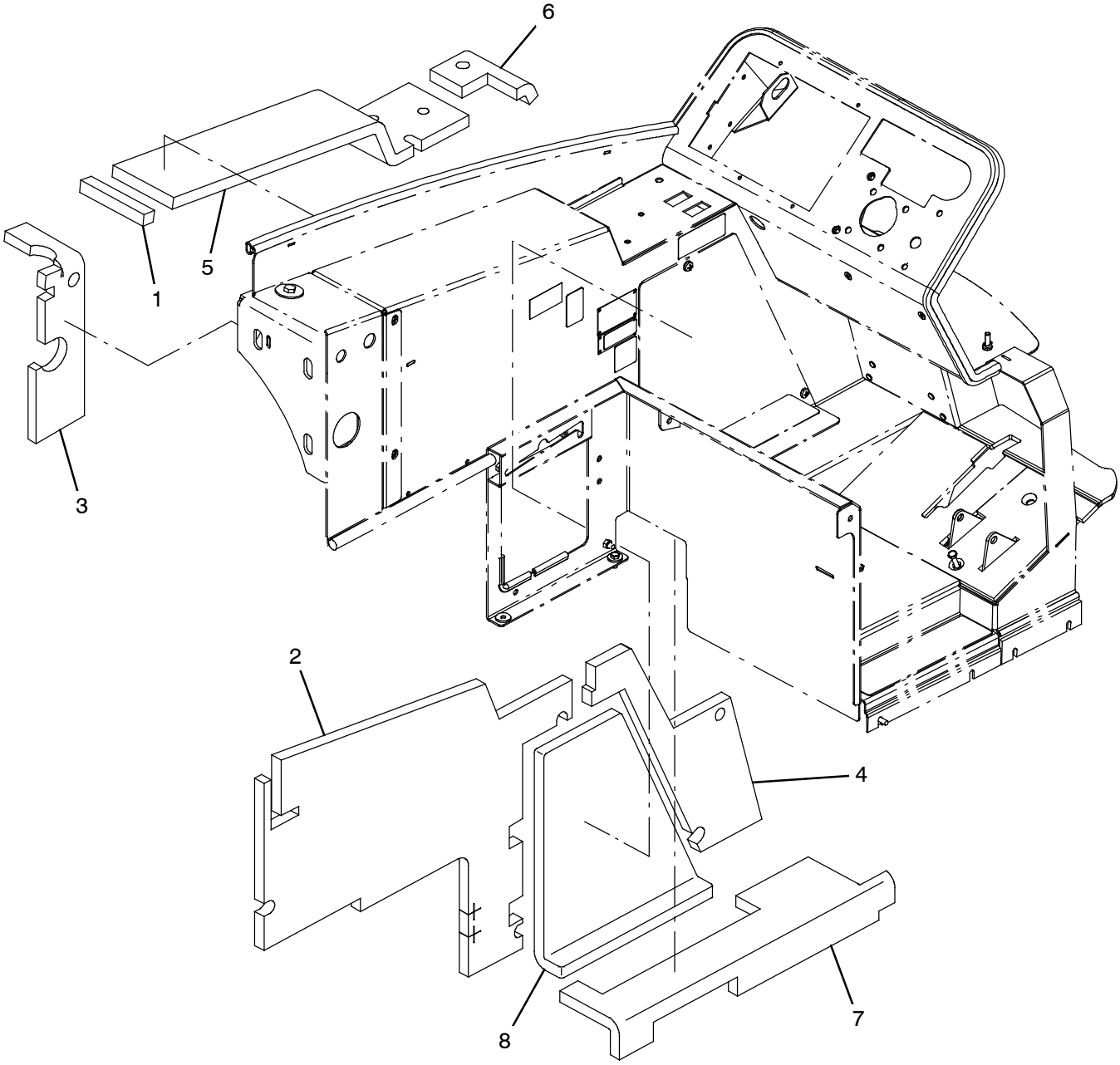

354602

Fig. 5 - Operator Station Insulation Group

Ref.	Part No.	Serial Number	Description	Qty.
1	1034769	(000000-)	Insulation, Flame- Retardant, 0.75- 0.88	1
2	1034765	(000000-)	Insulation, Flame- Retardant, 0.75- 0.88	1
3	1040841	(000000-)	Insulation, Flame- Retardant, 0.75- 0.88	1
4	1023464	(000000-)	Insulation, Flame- Retardant, 0.75- 0.88	1
5	1034764	(000000-)	Insulation, Flame- Retardant, 0.75- 0.88	1
6	1034766	(000000-)	Insulation, Flame- Retardant, 0.75- 0.88	1
7	1034768	(000000-)	Insulation, Flame- Retardant, 0.75- 0.88	1
8	1023569	(000000-)	Insulation, Flame- Retardant, 0.75- 0.88	1

Fig. 6 - Instrument Panel Group

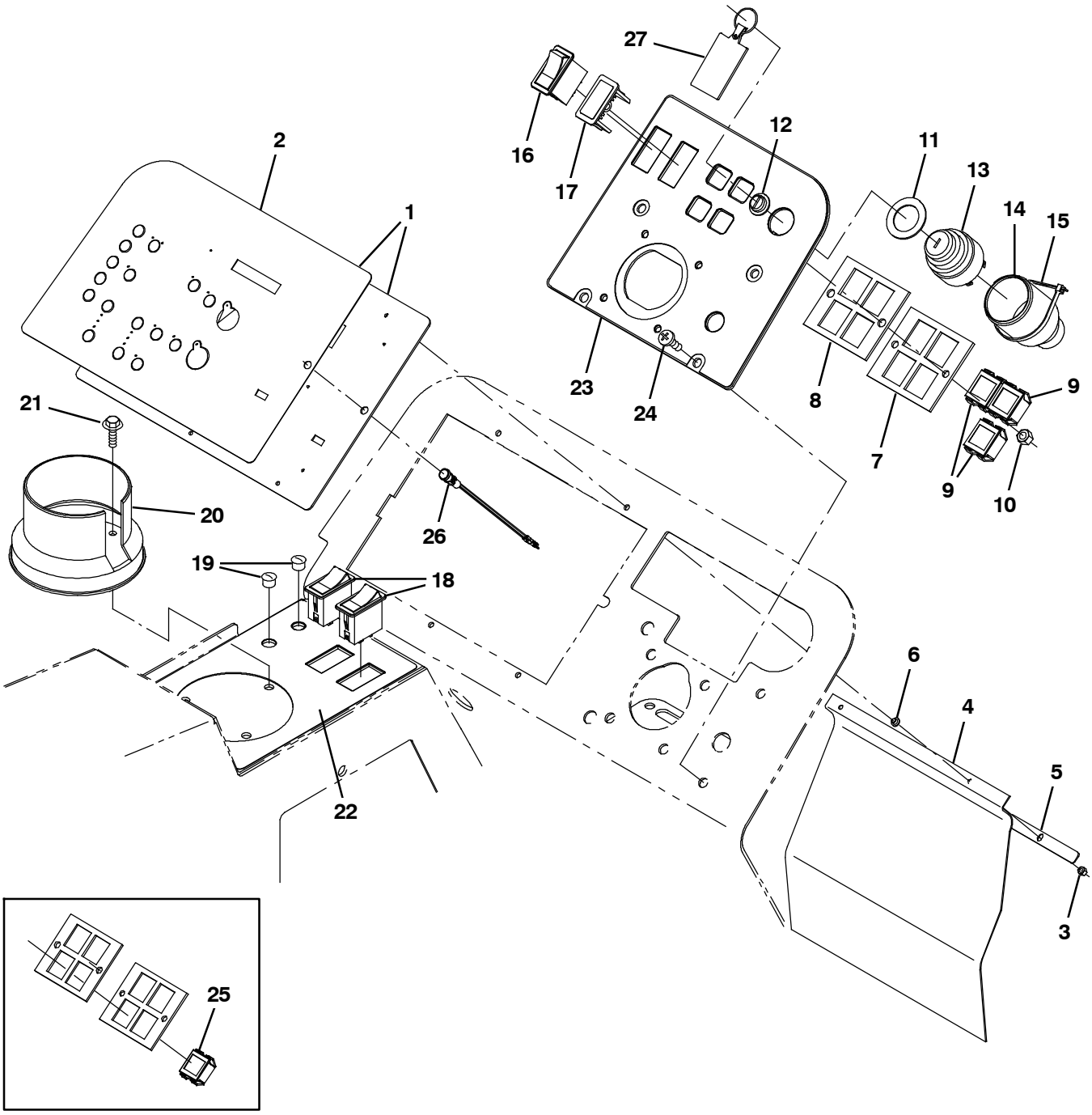

354410 - D

Fig. 6 - Instrument Panel Group

	Ref.	Part No.	Serial Number	Description	Qty.
▽	1	9003453	(000000-)	Panel Kit, Instmt, Repair [M20/M30]	1
▲	2	9002435	(000000-)	Label Kit, Panel, Replmt [M20/M30]	1
▽	1	9007912	(000000-)	Panel, Kit, Instmt Replmt [M20/M30 ec- H20]	1
▲	2	9007913	(000000-)	Label Kit, Panel, Replmt [M20/M30 ec- H20]	1
	3	16968	(000000-)	Nut, Hex, Lock, #08- 32, Nl	4
	4	1028769	(000000-)	Flap, Battery	1
	5	1028772	(000000-)	Bar, Flat, Ss 0.06, 00.50 X 10.00l, 2sl	1
	6	1029362	(000000-)	Washer, Shld, Nyl [8- 32]	4
	7	361071	(000000-)	Plate, Mtg, Light	1
	8	361073	(000000-)	Seal, Rbr, Clsd, 0.13, Instmt Panl	1
	9	361075	(000000-)	Light, Panl, 14vdc, 1.1 X 1.0	3
	10	08712	(000000-)	Nut, Hex, Lock, M6 X 1.00, Nl, Ss	2
	11	73736	(000000-)	Washer, Flat, 1.15b 1.75d .08, Stl	1
	12	382516	(000000-)	Boot, .63id .29l .90w	1
▽	13	87536	(000000-)	Switch, Ignition [Ku]	1
▲		87866	(000000-)	Key, Ignition [Set Of 2]	1
	14	383165	(000000-)	Boot, Switch, Ignition	1
	15	49266	(000000-)	Tie, Cable, Nyl, 07.3l .19w 1.8 Max D	2
	16	392171	(000000-)	Switch, Rocker, Dpdt, On / Off / On	1
	17	398501	(000000-)	Plug, Hole, Rt, Rocker Switch, .87 X 1.7	1
	18	398508	(000000-)	Switch, Rocker, Dpdt, Mom / Off / Mom	2
	19	56992	(000000-)	Plug, Hole, Rnd, 0.50h .03- .12, Blk Nyl	1
	20	223599	(000000-)	Cup Holder, Rwk	1
	21	1040467	(000000-)	Screw, Hex, M6 X 1.0 X 20, 9.8, Sems	3
	22	1027284	(000000-)	Label, Switch, Rocker	1
	23	9004881	(000000-)	Panel, Instmt, Rh, Dsl, Replmt	1
	24	1031665	(000000-)	Screw, Pan, M8 X 1.25 X 25, Blk	4
	25	361075	(000000- 001138)	Light, Panl, 14vdc, , 1.1 X 1.0	1
	26	1041822	(000000-)	Light, Led, .312D, 2 Volt [Tri- Color] (ec- H20 only)	1
	27	1075003	(000000-)	Keychain, Rectangle, Parts & Service	1

Fig. 7 - Seat Group

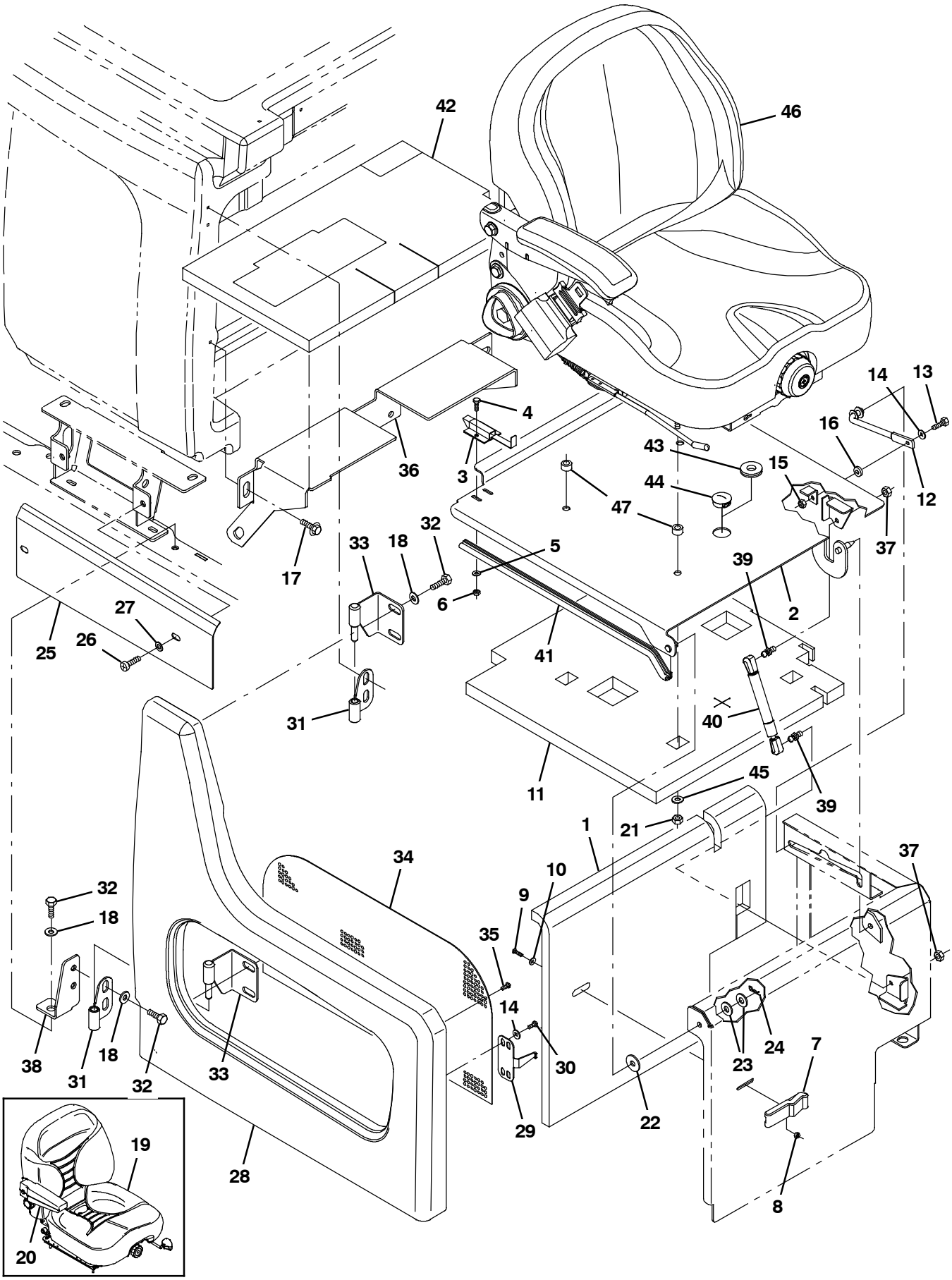

354603

Fig. 7 - Seat Group

	Ref.	Part No.	Serial Number	Description	Qty.
	1	1034767	(000000-)	Insulation, Flame- Retardant, 0.75- 0.88	1
	2	1019228	(000000-)	Plate Wldt, Seat	1
	3	1025736	(000000-)	Latch	1
	4	06933	(000000-)	Screw, Pan, Phl, M5 X 0.80 X 16, 4.8	2
	5	19066	(000000-)	Washer, Flat, 10	2
	6	06549	(000000-)	Nut, Hex, Lock, M5 X 0.80, Nl	2
	7	49800	(000000-)	Latch	1
	8	02850	(000000-)	Nut, Hex, Lock, M4 X 0.70, Nl	4
	9	06928	(000000-)	Screw, Pan, Phl, M4 X 0.70 X 20, 4.8	4
	10	19064	(000000-)	Washer, Flat, 06	2
	11	1023499	(000000-)	Insulation, Flame- Retardant, 1.0	1
	12	223080	(000000-)	Arm Wldt, Safety, Sppt, Seat, .38d 06.5d	1
	13	06944	(000000-)	Screw, Hex, M6 X 1.00 X 25, 8.8	1
	14	32483	(000000-)	Washer, Flat, 0.25, Sae	4
	15	08708	(000000-)	Nut, Hex, Lock, M6 X 1.00, Nl	1
	16	21851	(000000-)	Spacer, Plstc, Nyl	1
	17	1020341	(000000-)	Screw, Hex, M8 X 1.25 X 20, Ss, Sems	3
	18	1017218	(000000-)	Washer, Flat, 0.32b 1.00d .12, Ss	9
▽	19	1022105	(000000- 004257)	Seat, Suspension, W/1 Arm And Belt	1
▲		1066893	(000000- 004257)	Seatbelt, Retractable [Deluxe Seat]	1
▲		1048955	(000000- 004257)	Switch, Seat, No [Delta 6440- 04]	1
▲	20	1072815	(000000- 004257)	Armrest, Rh	1
	21	32983	(000000-)	Nut, Hex, Lock, .31- 18, Nl (NA ONLY)	4
	21	01760	(000000-)	Nut, Hex, Lock, .31- 18, Nl, Thin (CE ONLY)	4
	22	364749	(000000-)	Washer, Flat, 0.41b 1.25d .12, Pye	1
	23	32492	(000000-)	Washer, Flat, 0.38, Std	2
	24	08085	(000000-)	Pin, Cotter, Hair, 0.31d .058 Wir	1
	25	1036220	(000000-)	Cover, Lower, Rh	1
	26	1031665	(000000-)	Screw, Pan, M8 X 1.25 X 25, Blk	2
	27	39349	(000000-)	Washer, Flat, 0.31, Sae	2
	28	1033230	(000000-)	Shroud, Rh	1
	29	1026825	(000000-)	Bracket, Latch, Shrd, Seat	1
	30	09200	(000000-)	Screw, Pan, Phl, M5 X 0.80 X 12, Ss	2
	31	1024464	(000000-)	Hinge Wldt, Shrd, Rh	2
	32	16931	(000000-)	Screw, Hex, M8 X 1.25 X 20, 8.8	8
	33	1024425	(000000-)	Hinge Wldt, Shrd, Rh	2
	34	1036345	(000000-)	Grill, Lh	1
	35	222267	(000000-)	Screw, Pan, Phl, 06- 20 X 0.50, Fmg/Ab	6
	36	1039705	(000000-)	Bracket, Sppt, Seat	1
	37	01760	(001299-)	Nut, Hex, Lock, .31- 18, Nl, Thin	2
	38	1036832	(000000-)	Bracket, Mtg, Hinge, Rh	1
	39	58494	(001299-)	Stud, Ball, .39d .31- 16, Gasspring	2
	40	368391	(001299-)	Gasspring, 180lb, 03.0strk	1
	41	1031206	(001299-)	Seal, Afmkt, Bulb, 90, 0.50D, 02 Ft	1
	42	1047132	(000000-)	Insulation, Acstc, 1.0, 21.8 X 12.5 Adh	1
	43	10632- 8	(001139-)	Grommet, Rbr, 0.75id, F/1.3h, .12 Matl (CE ONLY)	1
	44	76888	(001139-)	Plug, Hole, Rnd, 1.25h .03- .12, Blk Nyl (NA ONLY)	1
	45	32491	(000000-)	Washer, Flat, 0.31, Std	4
	46	1072456	(004258-)	Seat (See Breakdowns)	1
	47	1051052	(004258-)	Spacer, Rnd, .38b .88d .38l (CE ONLY)	4

Fig. 8 - Steering Group

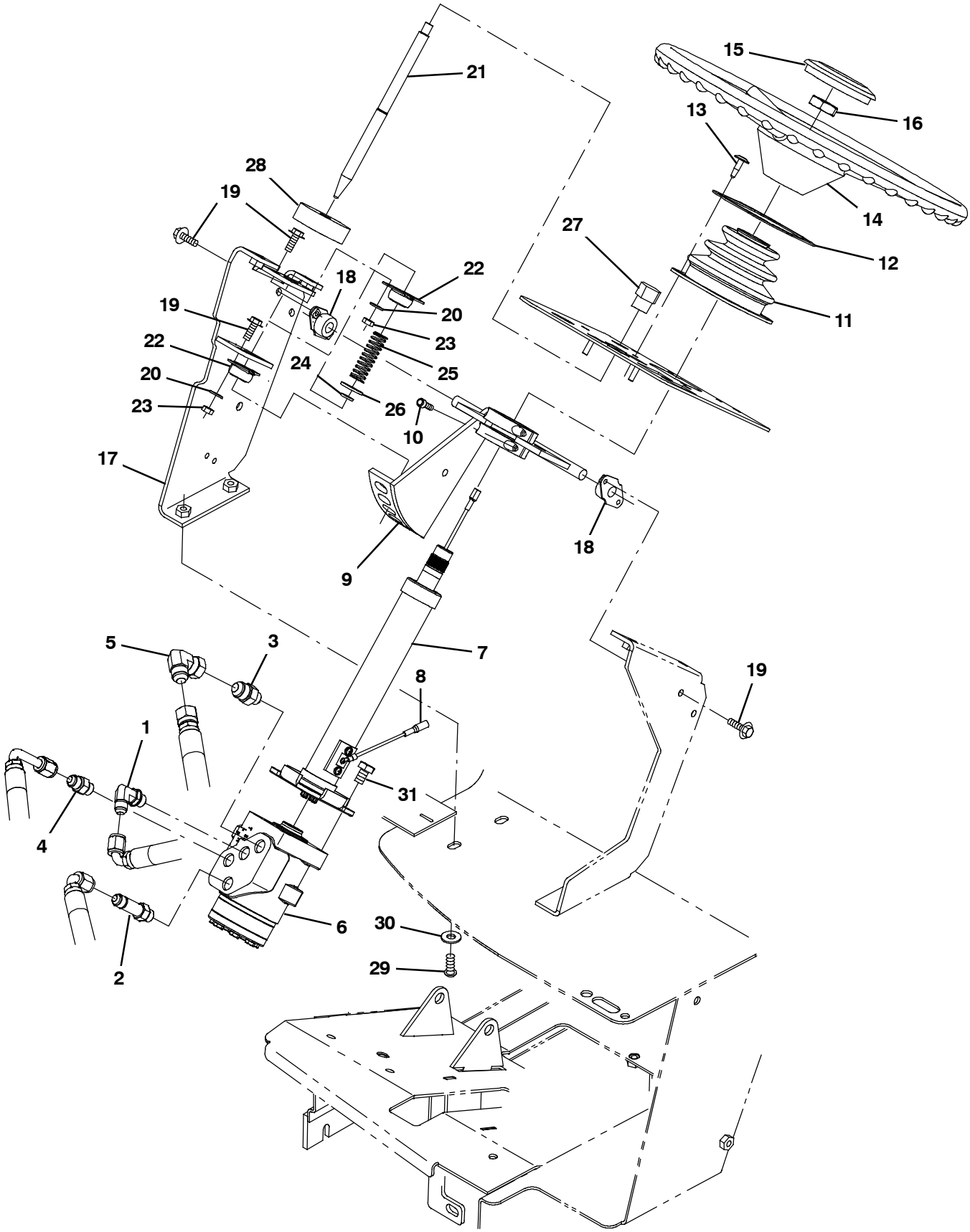

354412

Fig. 8 - Steering Group

	Ref.	Part No.	Serial Number	Description	Qty.
	1	56820	(000000-)	Fitting, Hyd, E90, Jm06/Om06	1
	2	59577	(000000-)	Fitting, Hyd, Str, Jm06/Om06, Long	1
	3	56835	(000000-)	Fitting, Hyd, Str, Jm08/Om06	1
	4	56690	(000000-)	Fitting, Hyd, Str, Jm06/Om06	1
	5	17980	(000000-)	Fitting, Hyd, E90, Jf08/Jm08	1
	6	1024260	(000000-)	Steer- Control, Hyd05, 06.1 2030 (See Breakdowns)	1
▽	7	1021265	(000000-)	Column, Steering, 09.9L 0.86D 36Tooth	1
▲	8	388153	(000000-)	Contact Kit, W/ Brush [En]	4
▽	9	73027	(000000-)	Bracket Wldt, Steering, Tilt	1
▲	10	01681	(000000-)	Screw, Soc, .25- 20 X 0.75, Al	4
	11	70622	(000000-)	Boot, Bellows, 3.1l 4.4w 2.8h 1hole, Neo	1
	12	70623	(000000-)	Retainer, Boot, Steering Column	1
	13	72970	(000000-)	Rivet, Plstc, .250d X 0.90	4
	14	1058996	(000000-)	Wheel, Steering, 14.3d 0.81b 36tooth	1
	15	1024478	(000000-)	Button, Cntrl, Horn	1
	16	56185	(000000-)	Nut, Hex, Jam, M20 X 1.5	1
	17	1024695	(000000-)	Bracket Wldt, Tilt, Rh	1
	18	70709	(000000-)	Bearing, Flng, 2hole, 0.50b	2
	19	1040467	(000000-)	Screw, Hex, M6 X 1.0 X 20, 9.8, Sems	8
	20	32483	(000000-)	Washer, Flat, 0.25, Sae	4
	21	1023926	(000000-)	Pin, Locking, Steering, Tilt	1
	22	47585	(000000-)	Bearing, Flng, 2hole, 0.50b [Nyl]	2
	23	08708	(000000-)	Nut, Hex, Lock, M6 X 1.00, Nl	4
	24	70717	(000000-)	Ring, Retaining, Ext, 0.50d, Hd	1
	25	22290	(000000-)	Spring, Cmpr, 0.72od .06wir 02.3l	1
	26	32486	(000000-)	Washer, Flat, 0.50, Sae	1
	27	04706	(000000-)	Knob, Tee, 2.5 X 1.0 1.1l 0.38- 16, Plstc	1
	28	75968	(000000-)	Insulation, Acstc, Rnd, 0.8, 02.5d 0.5h	1
	29	1031665	(000000-)	Screw, Pan, M8 X 1.25 X 25, Blk	2
	30	32491	(000000-)	Washer, Flat, 0.31, Std	2
	31	06960	(000000-)	Screw, Hex, M10 X 1.5 X 16, 8.8	4

Fig. 9 - Front Cover Group

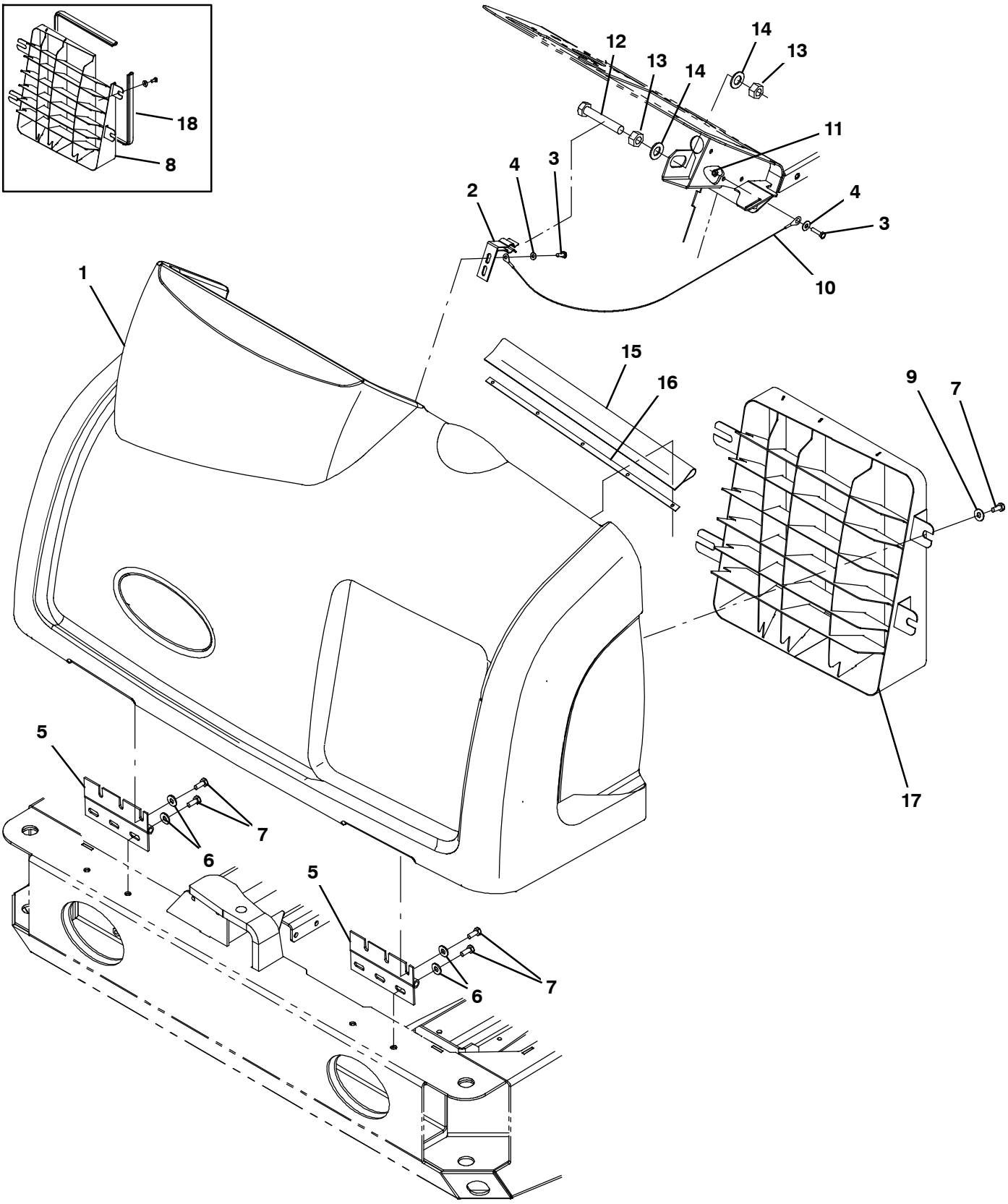

354604

Fig. 9 - Front Cover Group

Ref.	Part No.	Serial Number	Description	Qty.
1	1034844	(000000-)	Shroud, Front	1
2	1008916	(000000-)	Bracket Wldt, Latch	1
3	06942	(000000-)	Screw, Hex, M6 X 1.00 X 16, 8.8	3
4	32490	(000000-)	Washer, Flat, 0.25, Std	2
5	71941	(000000-)	Hinge, .38pin .12 3.5w 06.5l, 6/0.38sl	2
6	32491	(000000-)	Washer, Flat, 0.31, Std	8
7	16931	(000000-)	Screw, Hex, M8 X 1.25 X 20, 8.8	12
8	1037717	(000000- 001249)	Grill Wldt, Front	1
9	1017218	(000000-)	Washer, Flat, 0.32b 1.00d .12, Ss	4
10	74352	(000000-)	Cable, Glv .09d 042.0l .38eye /.38eye	1
11	08708	(000000-)	Nut, Hex, Lock, M6 X 1.00, Nl	1
12	06988	(000000-)	Screw, Hex, M16 X 2.00 X 90, 8.8	1
13	07782	(000000-)	Nut, Hex, Std, M16 X 2.00	2
14	15331	(000000-)	Washer, Flat, 0.62, Sae	2
15	1046245	(000000-)	Seal, Shroud, Front	1
16	1037971	(000000-)	Strip, Mtg, Seal	1
17	1046090	(001250-)	Grill Wldt, Front	1
18	1031557	(000000- 001249)	Seal, Afmkt, Bulb, Str, 1.0D F/11Ga 08Ft	1

Fig. 10 - Engine Cover Group

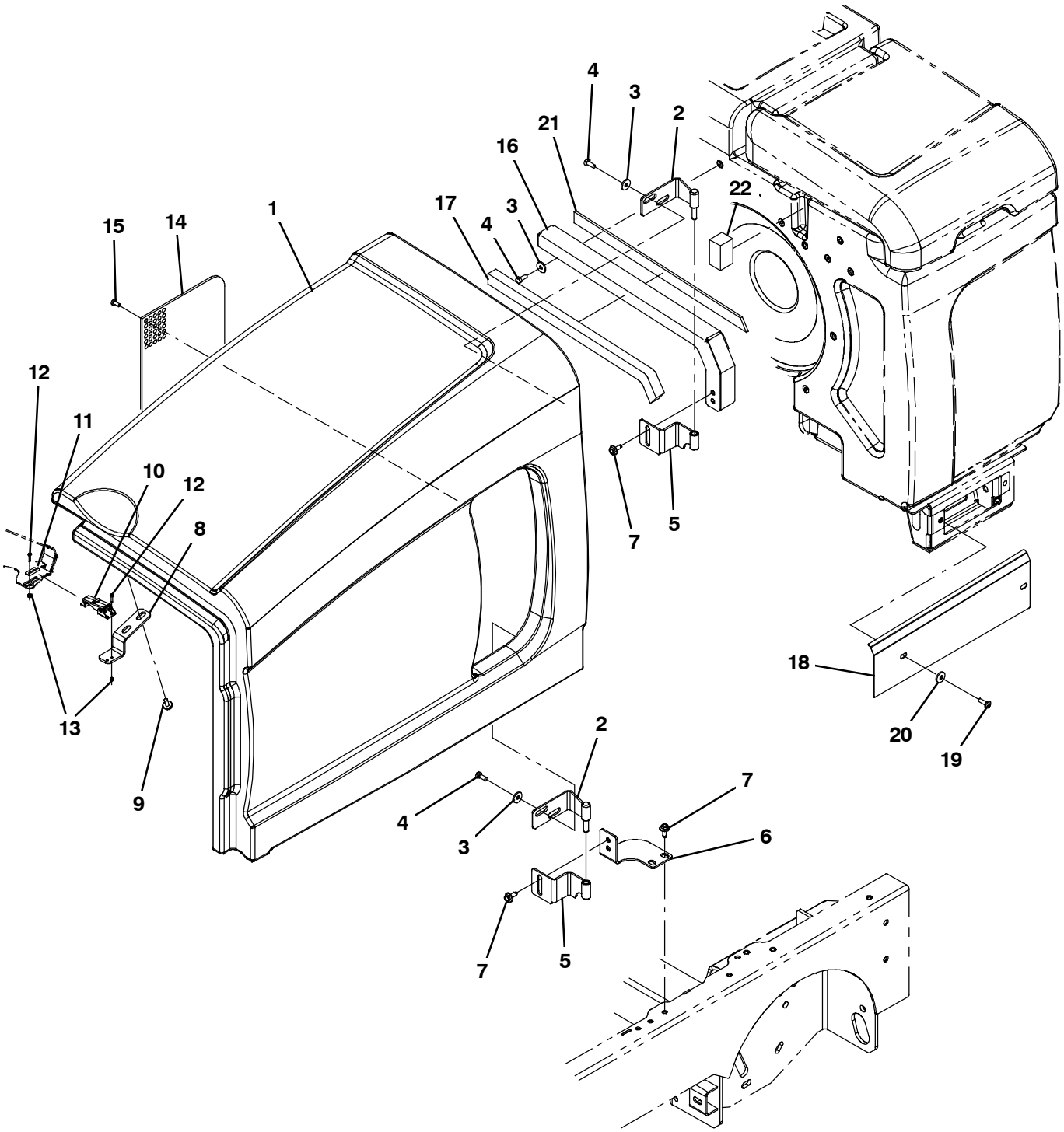

354605

Fig. 10 - Engine Cover Group

	Ref.	Part No.	Serial Number	Description	Qty.
	1	1033912	(000000-)	Shroud, Eng	1
	2	1036249	(000000-)	Hinge Wldt, Lh, Pin	2
	3	1017218	(000000-)	Washer, Flat, 0.32b 1.00d .12, Ss	6
	4	16931	(000000-)	Screw, Hex, M8 X 1.25 X 20, 8.8	6
	5	1036227	(000000-)	Hinge Wldt, Lh, Tube	2
	6	1040222	(000000-)	Bracket, Mtg, Hinge, Lh	1
	7	1037346	(000000-)	Screw, Hex, M8 X 1.25 X 25, 9.8, Sems	6
	8	1020186	(000000-)	Bracket, Latch, Cover	1
	9	1020341	(000000-)	Screw, Hex, M8 X 1.25 X 20, Ss, Sems	2
	10	384418	(000000-)	Latch, Door [Southco 91- 562- 07]	1
	11	384419	(000000-)	Bracket, Latch, Keeper	1
	12	24265	(000000-)	Screw, Pan, Phl, M4 X 0.70 X 16, Ss	4
	13	33932	(000000-)	Nut, Hex, Lock, M4 X 0.70, Nl, Ss	4
	14	1036345	(000000-)	Grill, Lh	1
	15	222267	(000000-)	Screw, Pan, Phl, 06- 20 X 0.50, Fmg/Ab	6
	16	1040187	(000000-)	Channel, Mtg, Seal, Shrd, Lh	1
	17	1047191	(000000-)	Channel, Mtg, Seal, Shrd, Lh	1
	18	1037340	(000000-)	Cover, Lower, Lh	1
	19	1031665	(000000-)	Screw, Pan, M8 X 1.25 X 25, Blk	2
	20	39349	(000000-)	Washer, Flat, 0.31, Sae	2
	21	1047295	(000000-)	Seal, Foam, 0.50	1
	22	1047192	(000000-)	Seal, Foam, 1.18	1
	9	9008395	(000000- 003999)	Screw, Hex, M07- 1.00 X 20.0, 8.8	6
▲		393982	(004000-)	Element, Fltr, Oil, Spin- On (Mits)	1
▽	1	9014202	(004583-)	Engine, Block, Long [Mits 12mm] (See Engine Breakdown)	1
▲		393982	(004000-)	Element, Fltr, Oil, Spin- On (Mits)	1
▲		393982	(004000-)	Element, Fltr, Oil, Spin- On (Mits)	1
▽	1	9014202	(004583-)	Engine, Block, Long [Mits 12mm] (See Engine Breakdown)	1
▲		393982	(004000-)	Element, Fltr, Oil, Spin- On (Mits)	1

Fig. 11 - Engine and Mount Group Diesel

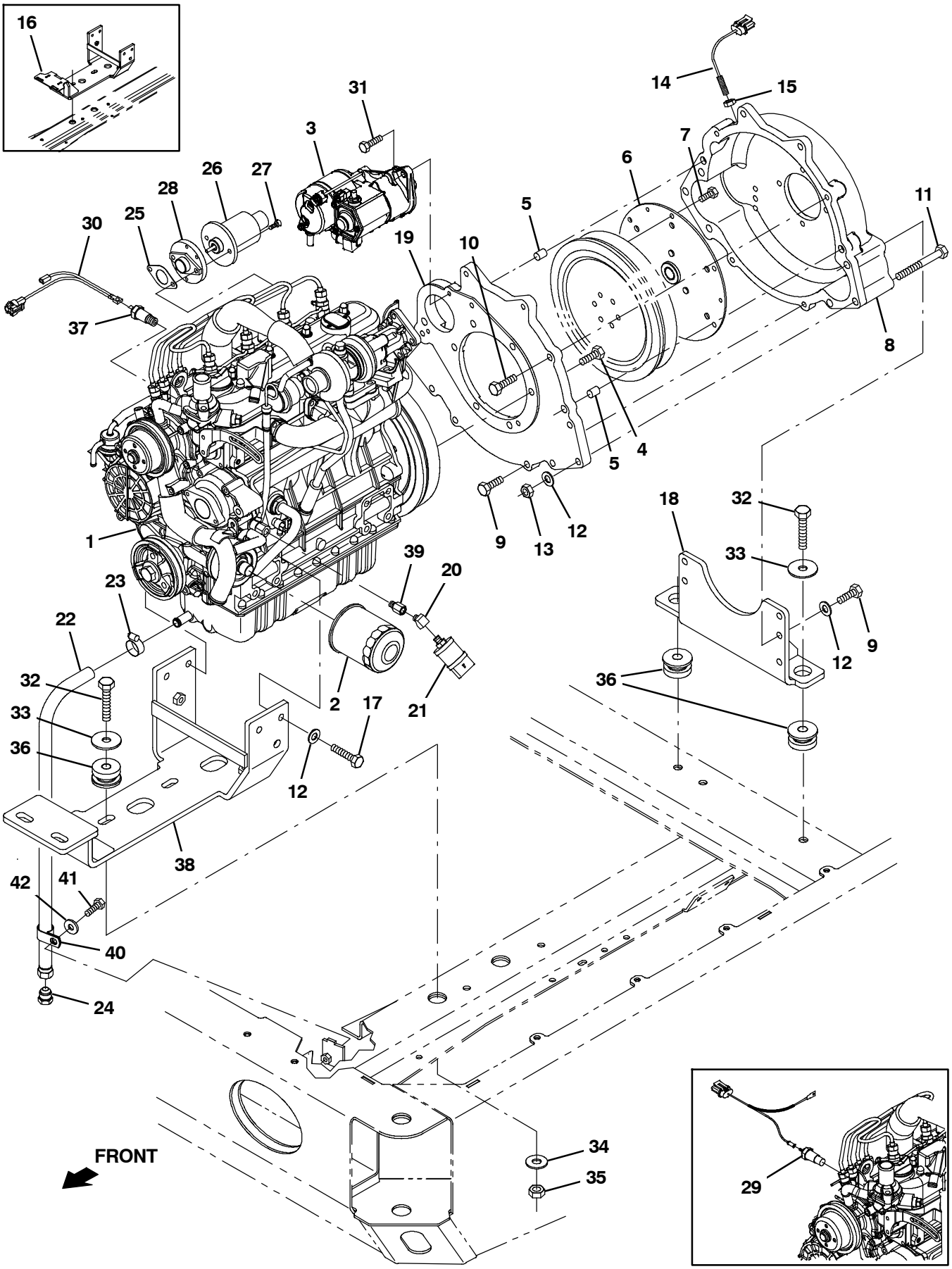

354703

Fig. 11 - Engine and Mount Group Diesel

	Ref.	Part No.	Serial Number	Description	Qty.
▽	1	1035902	(000000-)	Engine, Dsl, Turbo [Kubota M30] (See Engine Breakdown)	1
▲	2	55849	(000000-)	Element, Fltr, Oil, Spin- On [Ku]	1
▲	3	74405	(000000-)	Starter, 12vdc [Kubota] (See Engine Breakdown)	1
	4	07299	(000000-)	Screw, Hex, M10 X 1.25 X 25, 8.8	6
	5	54911- 16	(000000-)	Pin, Dowel, Cyl Block [1pk=4]	2
	6	19252	(000000-)	Coupling, Drive, Flex, 09.5d /13tooth	1
	7	16735	(000000-)	Screw, Hex, M8 X 1.25 X 16, 8.8	6
	8	58566	(000000-)	Housing, Flywheel, Mach [1505, Kubo]	1
	9	39283	(000000-)	Screw, Hex, M10 X 1.50 X 25, 8.8	5
	10	39284	(000000-)	Screw, Hex, M10 X 1.50 X 35, 8.8	2
	11	06966	(000000-)	Screw, Hex, M10 X 1.50 X 110, 8.8	5
	12	32485	(000000-)	Washer, Flat, 0.38, Sae	12
	13	41430	(000000-)	Nut, Hex, Lock, M10 X 1.5, Nl	5
	14	380521	(000000-)	Magnet, Pickup	1
	15	20171	(000000-)	Nut, Hex, Jam, .38- 24	1
	16	1043391	(000000- 001249)	Bracket Wldt, Mtg, Eng, Front, Dsl	1
	17	07299	(000000-)	Screw, Hex, M10 X 1.25 X 25, 8.8	4
	18	1023074	(000000-)	Bracket Wldt, Mtg, Eng, Rear, Dsl	1
	19	55837	(000000-)	Adapter, Hsng, Flywheel [1505, Kubo]	1
	20	24976	(000000-)	Fitting, Brs, E45, Pf02/Pm02	1
	21	1055106	(000000-)	Switch, Press, 0006psi Dpdt	1
	22	1027273	(000000-)	Hose, 0300, 08, Jf08str / None, 19.0	1
	23	63810	(000000-)	Clamp, Hose, Wormdrive, 0.56- 1.06d, .56w	1
	24	16376	(000000-)	Fitting, Hyd, Plug, Jm08	1
	25	70165	(000000-)	Gasket, Solenoid, Throttle [Ku]	1
	26	71385	(000000-)	Actuator, Govnr, Dsl	1
	27	71388	(000000-)	Screw, Soc, M6 X 1.00 X 16, 12.9	4
	28	393401	(000000-)	Adapter, Actuator, Govnr, Eng, Dsl	1
	29	60711	(000000- 001121)	Switch, Temp, Water, 06pmt 235deg [Fd] (Replaced by 9005789)	1
	30	1038203	(000000-)	Harness, Temp, Eng, Switch [M30]	1
	31	76570	(000000-)	Screw, Hex, M8 X 1.25 X 30, 8.8	2
	32	06972	(000000-)	Screw, Hex, M12 X 1.75 X 60, 8.8	4
	33	04414	(000000-)	Washer, Flat, 0.53b 1.88d .12, Stl, Pl	4
	34	32493	(000000-)	Washer, Flat, 0.50, Std	2
	35	08711	(000000-)	Nut, Hex, Lock, M12 X 1.75, Nl	2
	36	51176	(000000-)	Isolator, Vib, .50d	4
	37	1050757	(001122-)	Switch, Thermostat, Water	1
	38	1046810	(001250-)	Bracket Wldt, Mtg, Eng, Front, Dsl	1
	39	1071502	(000000-)	Fitting, Brs, Str, Pf02/Pm02 [Bspt]	1
	40	69234	(000000-)	Clamp, Cable, Stl, 1.00d X 0.75w, 1hole	1
	41	09010	(000000-)	Screw, Hex, M8 X 1.25 X 25, Ss	1
	42	01685	(000000-)	Washer, Flat, 0.38b 0.88d .08, Ss	1

Fig. 12 - Engine Fuel Tank Group, Diesel

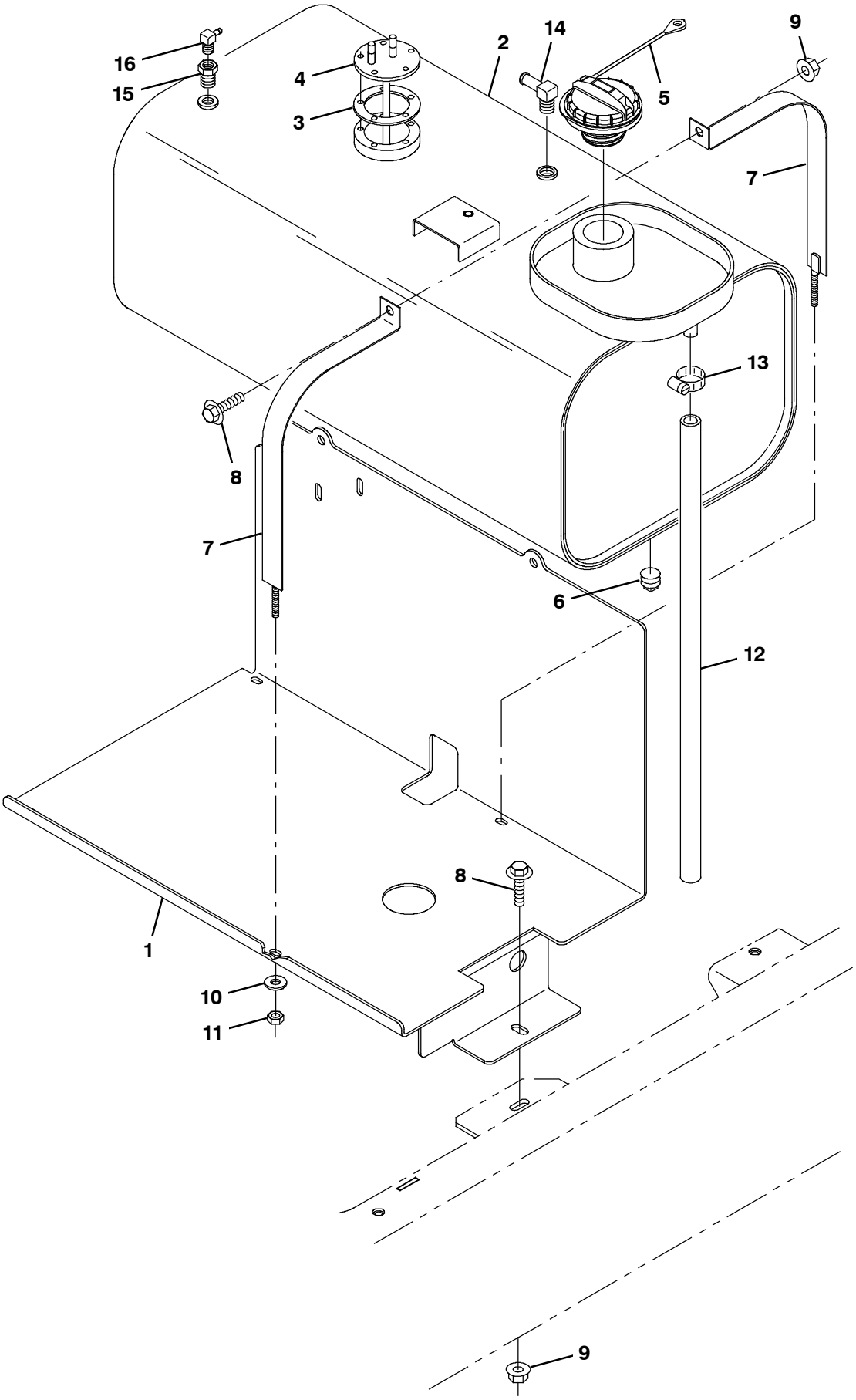

354704

Fig. 12 - Engine Fuel Tank Group, Diesel

	Ref.	Part No.	Serial Number	Description	Qty.
	1	1035796	(000000-)	Tray Wldt, Fuel	1
▽	2	9003934	(000000-)	Tank, Fuel, 11.2Gal, Dsl, Replmt, NA[08]	1
▲	3	1033897	(000000-)	Gasket, Sender, Fuel	1
▲	4	1033901	(000000-)	Send- Unit, Fuel [2007]	1
▲	5	1032812	(000000-)	Cap, Fuel, Tank	1
▲	6	48126	(000000-)	Fitting, Pipe, Plug, Pm02, Sq Head	1
▽	2	9003939	(000000-)	Tank, Fuel, 11.2Gal, Dsl, Replmt, CE[08]	1
▲	3	1033897	(000000-)	Gasket, Sender, Fuel	1
▲	4	1033901	(000000-)	Send- Unit, Fuel [2007]	1
▲	5	1032812	(000000-)	Cap, Fuel, Tank	1
▲	6	48126	(000000-)	Fitting, Pipe, Plug, Pm02, Sq Head	1
▽	2	9003958	(000000-)	Tank, Fuel, 11.2Gal, Dsl, Replmt, TJ[08]	1
▲	3	1033897	(000000-)	Gasket, Sender, Fuel	1
▲	4	1033901	(000000-)	Send- Unit, Fuel [2007]	1
▲	5	1032812	(000000-)	Cap, Fuel, Tank	1
▲	6	48126	(000000-)	Fitting, Pipe, Plug, Pm02, Sq Head	1
	7	1025229	(000000-)	Strap, Tank, Gas	2
	8	1037354	(000000-)	Screw, Hex, M8 X 1.25 X 30, 9.8, Sems	2
	9	08709	(000000-)	Nut, Hex, Lock, M8 X 1.25, Nl	3
	10	32483	(000000-)	Washer, Flat, 0.25, Sae	3
	11	32981	(000000-)	Nut, Hex, Lock, .25- 20, Nl	2
	12	1023482	(000000-)	Hose, Fuel, 0.50id, 21.0l	1
	13	54333	(000000-)	Clamp, Hose, Wormdrive, 0.31- 0.88d, .31w	1
	14	9000355	(000000-)	Fitting, Brs, E90, Em05/Pm04	1
	15	17414	(000000-)	Fitting, Hyd, Str, Pf02/Pm04	1
	16	32183	(000000-)	Fitting, Brs, E90, Bm03/Pm02	1

Fig. 13 - Engine Fuel Line Group, Diesel

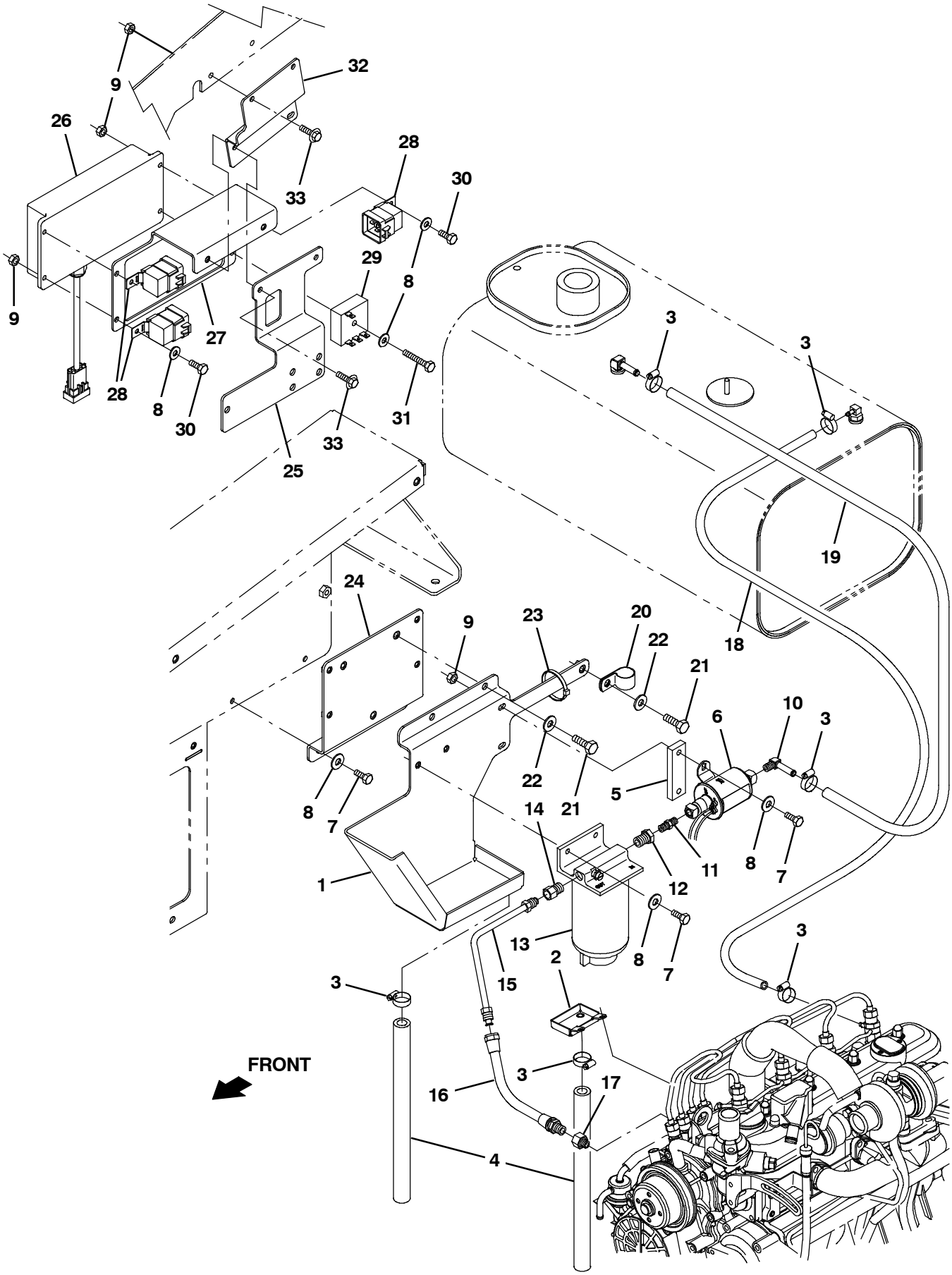

354705

Fig. 13 - Engine Fuel Line Group, Diesel

	Ref.	Part No.	Serial Number	Description	Qty.
	1	1032512	(000000-)	Tray Wldt, Drip, Dsl	1
	2	1032424	(000000-)	Tray Wldt, Drip, Fuel	1
	3	54333	(000000-)	Clamp, Hose, Wormdrive, 0.31- 0.88d, .31w	6
	4	1006416	(000000-)	Hose, Afmkt, Pvc, Clr, 0.38id, 03ft	1
	5	364779	(000000-)	Bar, Flat, Stl 0.38, 01.00 X 03.3l	1
	6	59015	(000000-)	Pump, Fuel	1
	7	06942	(000000-)	Screw, Hex, M6 X 1.00 X 16, 8.8	6
	8	32490	(000000-)	Washer, Flat, 0.25, Std	10
	9	08708	(000000-)	Nut, Hex, Lock, M6 X 1.00, Nl	12
	10	53029	(000000-)	Fitting, Brs, E90, Em05/Pm02	1
	11	47566	(000000-)	Fitting, Hyd, Str, Pm02/Pm02	1
	12	17414	(000000-)	Fitting, Hyd, Str, Pf02/Pm04	1
▽	13	1016827	(000000-)	Filter Assy, Fuel, Dsl	1
▲		1017126	(000000-)	Element, Fltr, Fuel [Dn]	1
	14	78043	(000000-)	Fitting, Brs, Str, If05/Pm04	1
	15	1040575	(000000-)	Fuelline, .31d 05if/05if, Stl	1
	16	70173	(000000-)	Hose, 0050, 04, If05str / Im05str, 10.0	1
	17	365066	(000000-)	Fitting, Hyd, Str, Metric, Om10/If05	1
	18	87738	(000000-)	Hose, Fuel, 0.18id, 29.0l	1
	19	365190	(000000-)	Hose, Fuel, 0.31id, 22.0l	1
	20	69234	(000000-)	Clamp, Cable, Stl, 1.00d X 0.75w, 1hole	1
	21	16931	(000000-)	Screw, Hex, M8 X 1.25 X 20, 8.8	2
	22	32491	(000000-)	Washer, Flat, 0.31, Std	3
	23	49266	(000000-)	Tie, Cable, Nyl, 07.3l .19w 1.8 Max D	2
	24	1029082	(000000-)	Bracket, Mtg, Ecu [M20/T20 2007]	1
	25	1059488	(000000-)	Bracket, Mtg, Coolant, Tank, Dsl [2010]	1
	26	1040835	(000000-)	Control, Govnr [All Purpose]	1
	27	1027922	(000000-)	Bracket, Mtg, Govnr Control, Dsl	1
	28	56186	(000000-)	Relay, 12vdc, 040a, Spdt No	3
	29	379656	(000000-)	Timer, 12vdc, 1a [10s Sgl Shot]	1
	30	06943	(000000-)	Screw, Hex, M6 X 1.00 X 20, 8.8	3
	31	06947	(000000-)	Screw, Hex, M6 X 1.00 X 40, 8.8	1
	32	1040644	(000000-)	Bracket, Cntrl, Dsl [M30]	1
	33	1036892	(000000-)	Screw, Hex, M6 X 1.00 X 25, 9.8 Sems	4

Fig. 14 - Engine Air Cleaner Group

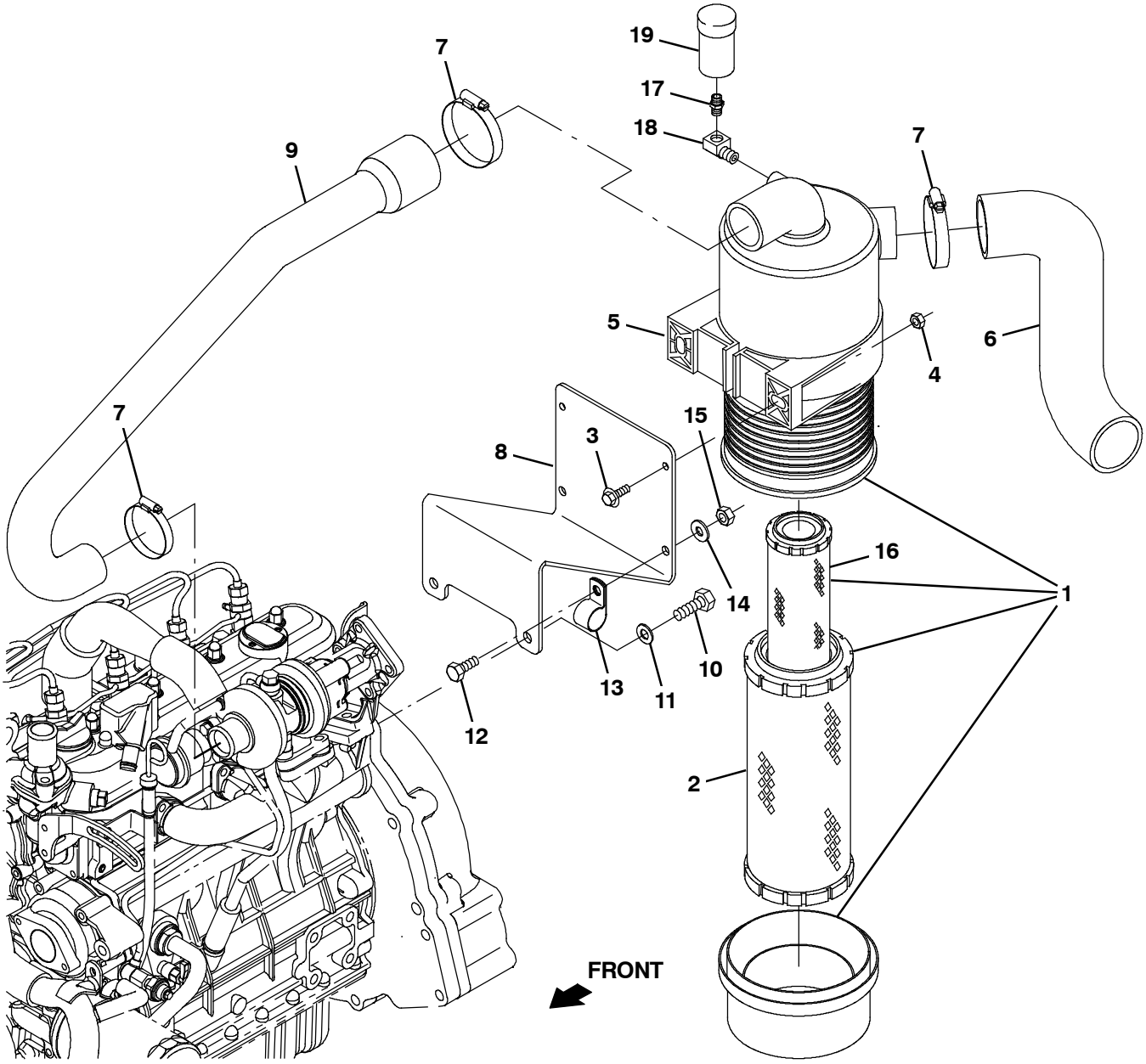

354706

Fig. 14 - Engine Air Cleaner Group

	Ref.	Part No.	Serial Number	Description	Qty.
▽	1	369745	(000000-)	Filter Assy, Air	1
▲	2	369746	(000000-)	Element, Fltr, Air [Dn]	1
	3	1036892	(000000-)	Screw, Hex, M6 X 1.00 X 25, 9.8 Sems	2
	4	08708	(000000-)	Nut, Hex, Lock, M6 X 1.00, Nl	2
	5	369747	(000000-)	Clamp, Mtg, Fltr, Air	1
	6	1020949	(000000-)	Hose, Intake, Mold, 2.00id [Epdm]	1
	7	14432	(000000-)	Clamp, Hose, Wormdrive, 1.81- 2.75d, .50w	3
	8	1037288	(000000-)	Bracket, Mtg, Air Fltr, Dsl [M30]	1
	9	1036155	(000000-)	Hose, Intake, Mold,1.8id 1.3id [Epdm]	1
	10	39284	(000000-)	Screw, Hex, M10 X 1.50 X 35, 8.8	2
	11	32485	(000000-)	Washer, Flat, 0.38, Sae	2
	12	16931	(000000-)	Screw, Hex, M8 X 1.25 X 20, 8.8	1
	13	69234	(000000-)	Clamp, Cable, Stl, 1.00d X 0.75w, 1hole	1
	14	32491	(000000-)	Washer, Flat, 0.31, Std	1
	15	08709	(000000-)	Nut, Hex, Lock, M8 X 1.25, Nl	1
	16	398279	(000000-)	Element, Fltr, Air, Safety (Option)	1
	17	51560- 5	(000000-)	Fitting, Brs, Str, Pm02, Service (CE Only)	1
	18	11984	(000000-)	Fitting, Pipe, E90, Pf02/Pm02 (CE Only)	1
	19	03026	(000000-)	Indicator, Service, Fltr, Air [20h20 Dn] (CE Only)	1

Fig. 15 - Engine Alternator Group, Diesel

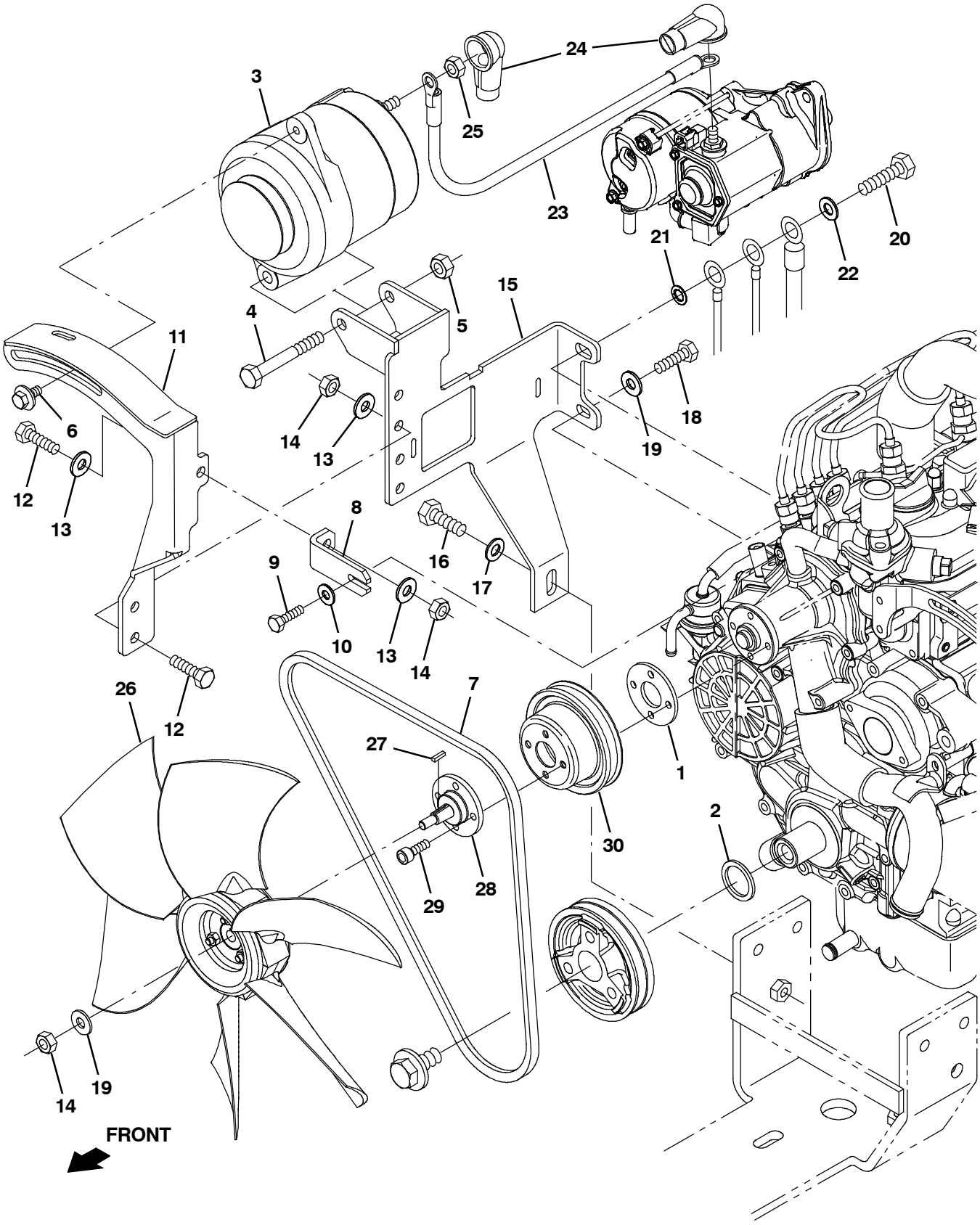

354707

Fig. 15 - Engine Alternator Group, Diesel

Ref.	Part No.	Serial Number	Description	Qty.
1	1039212	(000000-)	Spacer, Fan	1
2	1039208	(000000-)	Washer, Flat, 1.10b 1.50d .12, Stl, Pl	1
3	392611	(000000-)	Alternator, 12vdc, 075a [Valeo]	1
4	35707	(000000-)	Screw, Hex, .38- 16 X 3.00, G5	1
5	59156	(000000-)	Nut, Hex, Lock, .38- 16, Nl, Ss	1
6	16953	(000000-)	Screw, Hex, .31- 18 X 0.75, Sems	1
7	393244	(000000-)	Belt, V, 42.0L [Hc41]	1
8	1036859	(000000-)	Bracket, Sppt, Alternator, Dsl	1
9	06946	(000000-)	Screw, Hex, M6 X 1.00 X 35, 8.8	1
10	32483	(000000-)	Washer, Flat, 0.25, Sae	1
11	1036847	(000000-)	Arm Wldt, Alternator, Dsl	1
12	39277	(000000-)	Screw, Hex, M8 X 1.25 X 25, 8.8	3
13	32490	(000000-)	Washer, Flat, 0.25, Std	4
14	08709	(000000-)	Nut, Hex, Lock, M8 X 1.25, Nl	4
15	1036844	(000000-)	Bracket Wldt, Mtg, Alternator, Dsl	1
16	39283	(000000-)	Screw, Hex, M10 X 1.50 X 25, 8.8	1
17	32485	(000000-)	Washer, Flat, 0.38, Sae	1
18	76570	(000000-)	Screw, Hex, M8 X 1.25 X 30, 8.8	1
19	32491	(000000-)	Washer, Flat, 0.31, Std	2
20	33612	(000000-)	Screw, Hex, M10 X 1.25 X 35, 8.8	1
21	32988	(000000-)	Washer, Lock, Int, 0.38	1
22	32485	(000000-)	Washer, Flat, 0.38, Sae	1
23	1029689	(000000-)	Cable, 06ga 16.0l Red .38ring /.38ring	1
24	1016314	(000000-)	Boot, 90deg .50id 1.00id 2.50l, Red	2
25	41361	(000000-)	Nut, Hex, Std, M8 X 1.25, Brs	1
26	1031566	(000000-)	Fan, Cooling, 14.1d, 6 Blade, 0.5b Taper	1
27	00960	(000000-)	Key, Sq, 0.12 X 0.12, 0.50l	1
28	1035341	(000000-)	Spacer, Fan, Dsl [M20/T20]	1
29	71388	(000000-)	Screw, Soc, M6 X 1.00 X 16, 12.9	4
30	55847	(000000-)	Sheave, Fan	1

Fig. 16 - Engine Muffler Group, Diesel

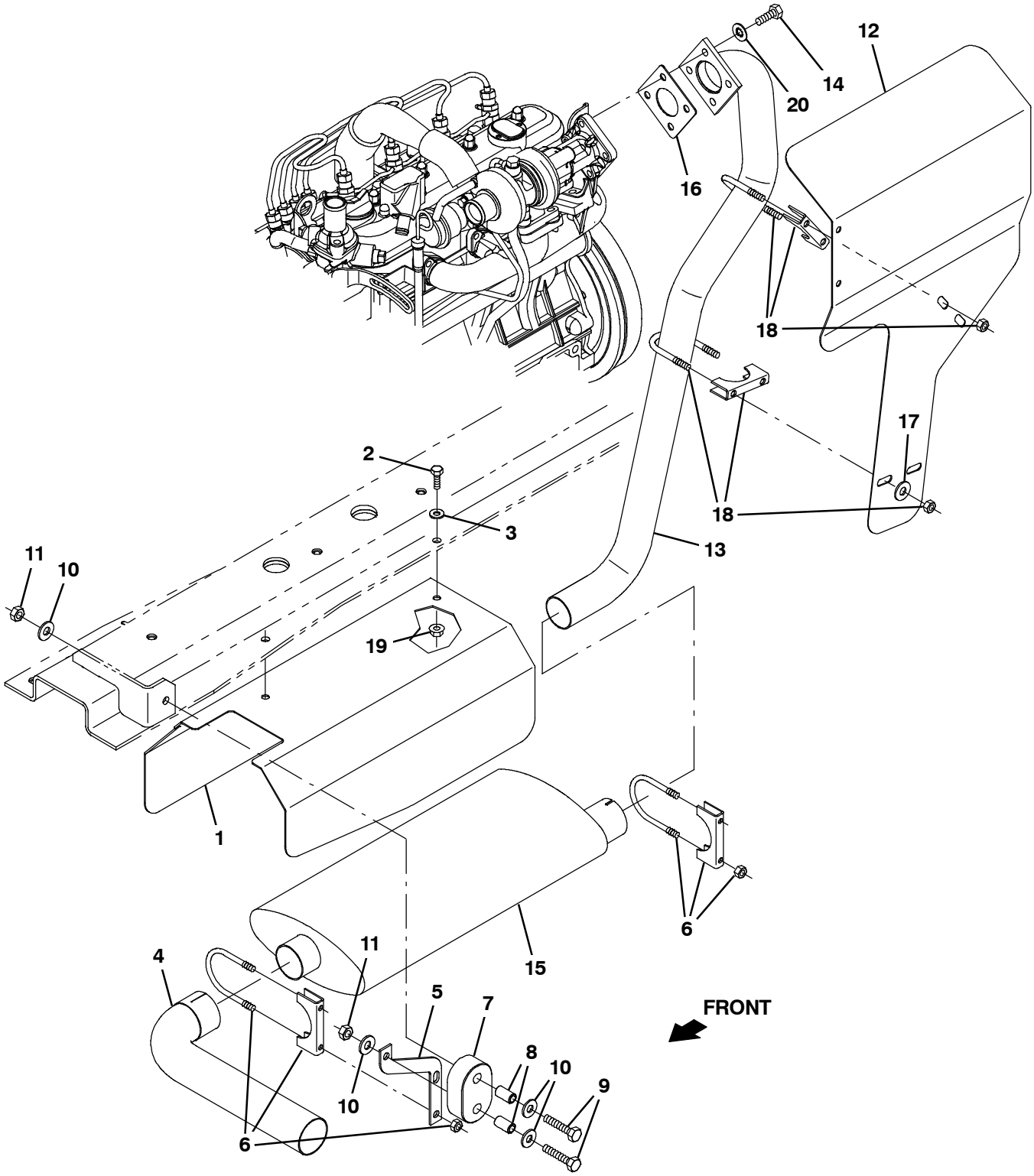

354708

Fig. 16 - Engine Muffler Group Diesel

Ref.	Part No.	Serial Number	Description	Qty.
1	1028994	(000000-)	Channel, Shield, Muffler	1
2	08716	(000000-)	Screw, Hex, M6 X 1.00 X 20, Ss	2
3	32483	(000000-)	Washer, Flat, 0.25, Sae	2
4	1045871	(000000-)	Tube, Exhaust, 1.9 D	1
5	1045892	(000000-)	Plate, Mtg, Muffler, Dsl [M30]	1
6	05881	(000000-)	Clamp, Muffler, 2.00D	2
7	1013031	(000000-)	Isolator, Rbr	1
8	222496	(000000-)	Sleeve, P/M, 0.31b 0.50d 0.9l [430ss]	2
9	222505	(000000-)	Screw, Hex, M8 X 1.25 X 45, Ss	2
10	01685	(000000-)	Washer, Flat, 0.38b 0.88d .08, Ss	4
11	08713	(000000-)	Nut, Hex, Lock, M8 X 1.25, Nl, Ss	2
12	9003991	(000000-)	Plate, Shield, Heat, Dsl, Replmt [M30]	1
12	9005052	(000000-)	Plate, Shield, Heat, Dsl, Replmt, TJ (Japan Only)	1
12	9005053	(000000-)	Plate, Shield, Heat, Dsl, Replmt, Ce (CE Only)	1
13	1045848	(000000-)	Tube Wldt, Exhaust, Dsl [M30]	1
14	16931	(000000-)	Screw, Hex, M8 X 1.25 X 20, 8.8	4
15	21726	(000000-)	Muffler, 3.2 8.0w 17.0l 1.9/1.8id	1
16	51332	(000000-)	Gasket [Ku]	1
17	32491	(000000-)	Washer, Flat, 0.31, Std	2
18	24012	(000000-)	Clamp, Muffler, 1.62D	2
19	07790	(000000-)	Nut, Hex, Flng, M6 X 1.00	2
20	32984	(000000-)	Washer, Lock, Int, 0.31	4

Fig. 17 - Engine Radiator Group, Diesel (000000-001249)

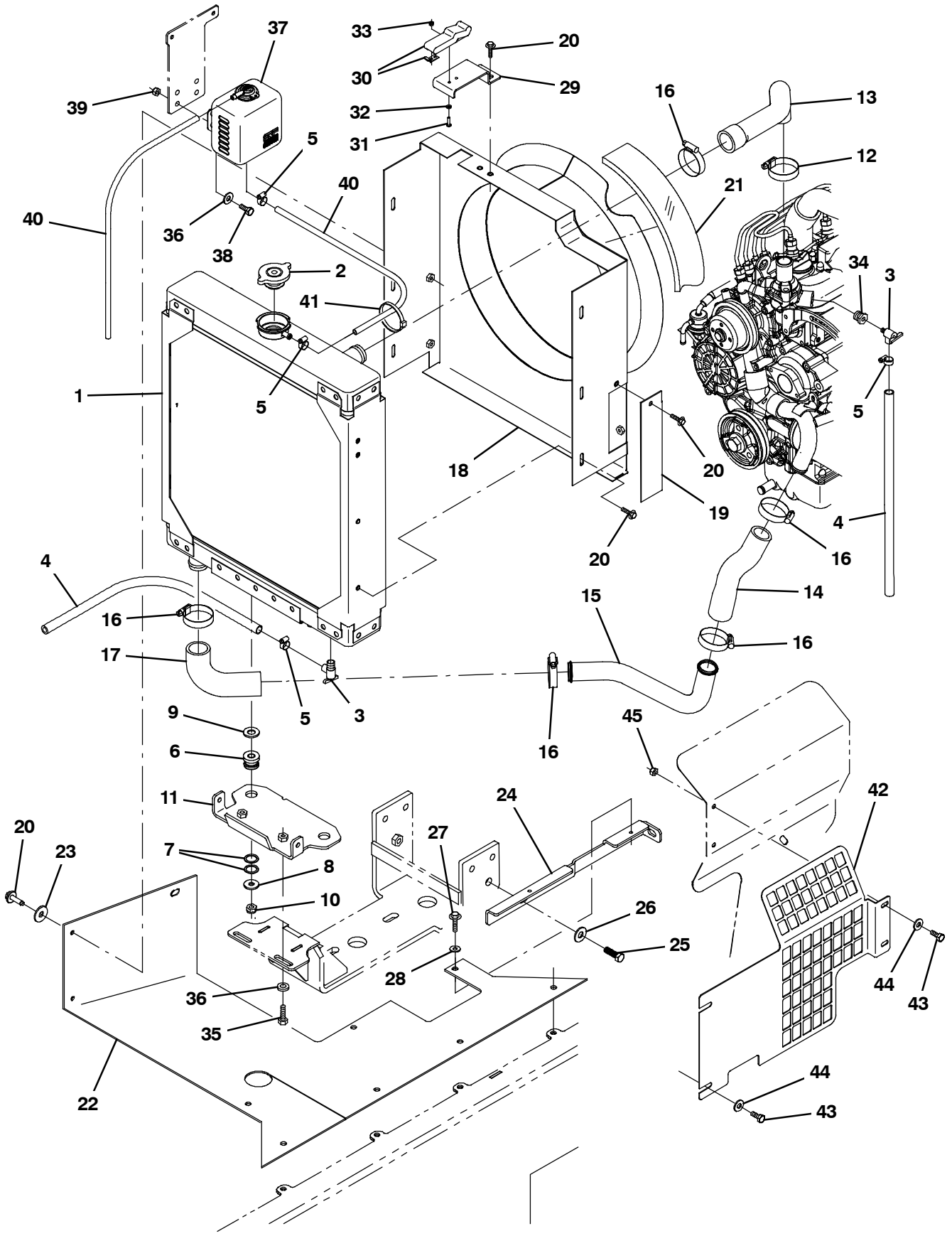

354709

Fig. 17 - Engine Radiator Group, Diesel (000000-001249)

Ref.	Part No.	Serial Number	Description	Qty.
1	1045316	(000000-001249)	Radiator Kit, Replmt, Ci	1
2	1045764	(000000-001249)	Cap, Radiator, 14Psi [Stant]	1
3	51305	(000000-001249)	Fitting, Draincock, E90, .25npt	2
4	73471	(000000-001249)	Hose, Pvc, Clr, 0.38id 0.56od 022.0l	2
5	43844	(000000-001249)	Clamp, Hose, Wormdrive, 0.25-0.62d, .31w	4
6	54274	(000000-001249)	Isolator, Vib, Bshg, 1.1d 0.6l .4b 0.78h	2
7	09832	(000000-001249)	Washer, Flat, 0.81b 1.06d .06, Stl	4
8	1014563	(000000-001249)	Washer, Flat, 0.40b 1.12d .12, Ss	2
9	32486	(000000-001249)	Washer, Flat, 0.50, Sae	2
10	41430	(000000-001249)	Nut, Hex, Lock, M10 X 1.5, Nl	2
11	1035976	(000000-001249)	Bracket, Sppt, Radiator, Upper	1
12	11399	(000000-001249)	Clamp, Hose, Wormdrive, 0.81-1.50d, .50w	1
13	1044084	(000000-001249)	Hose, Radiator, Upper, Dsl	1
14	1041054	(000000-001249)	Hose, Rbr, Adapter, 1.25id 1.12id	1
15	1041494	(000000-001249)	Tube, Radiator, Lower, Dsl [M30]	1
16	79381	(000000-001249)	Clamp, Hose, Wormdrive, 1.25-2.00D, .50W	5
17	1007482	(000000-001249)	Hose, Rbr, E90, 1.25id 1.25id 04.2 03.1	1
18	9003990	(000000-001249)	Plate, Guard, Fan Shrd, Dsl, Replmt [M30]	1
18	9005054	(000000-001249)	Plate, Guard, Fan Shrd, Dsl, Replmt, Tj (Japan Only)	1
18	9005055	(000000-001249)	Plate, Guard, Fan Shrd, Dsl, Replmt, Ce (CE Only)	1
19	1045433	(000000-001249)	Bracket, Cover	1
20	1036892	(000000-001249)	Screw, Hex, M6 X 1.00 X 25, 9.8 Sems	10
21	1044898	(000000-001249)	Insulation, Acstc, 0.05, 46.6 X 2.13	1
22	1043937	(000000-001249)	Skirt, Debris, Dsl, Radiator	1
23	41178	(000000-001249)	Washer, Flat, 0.25, Fendr	3
24	1043908	(000000-001249)	Bracket, Mtg, Skirt, Rbr, Dsl	1
25	39283	(000000-001249)	Screw, Hex, M10 X 1.50 X 25, 8.8	1
26	32485	(000000-001249)	Washer, Flat, 0.38, Sae	1
27	361339	(000000-001249)	Screw, Hex, M6 X 1.00 X 16, Fmg	2
28	32483	(000000-001249)	Washer, Flat, 0.25, Sae	2
29	1043891	(000000-001249)	Bracket, Mtg, Latch, Dsl	1
30	49800	(000000-001249)	Latch	1
31	06927	(000000-001249)	Screw, Pan, Phl, M4 X 0.70 X 16, 4.8	2
32	19064	(000000-001249)	Washer, Flat, 06	2
33	02850	(000000-001249)	Nut, Hex, Lock, M4 X 0.70, Nl	2
34	150006	(000000-001249)	Fitting, Brs, Str, Pf04/Pm06, Bshg	1
35	39277	(000000-001249)	Screw, Hex, M8 X 1.25 X 25, 8.8	2
36	32491	(000000-001249)	Washer, Flat, 0.31, Std	6
37	1023853	(000000-001249)	Tank, Coolant, 03.30w 4.7hi 04.7l,1liter	1
38	16931	(000000-001249)	Screw, Hex, M8 X 1.25 X 20, 8.8	4
39	08709	(000000-001249)	Nut, Hex, Lock, M8 X 1.25, Nl	4
40	1015041	(000000-001249)	Hose, Afmkt, Coolant Recvy, 05ft	1
41	49266	(000000-001249)	Tie, Cable, Nyl, 07.3l .19w 1.8 Max D	3
42	1046314	(000000-001249)	Guard, Fan, Dsl, Ce (CE Only)	1
43	06942	(000000-001249)	Screw, Hex, M6 X 1.00 X 16, 8.8 (CE Only)	4
44	32490	(000000-001249)	Washer, Flat, 0.25, Std (CE Only)	4
45	08708	(000000-001249)	Nut, Hex, Locl, M6 X 1.00, Nl (CE Only)	2

Fig. 18 - Engine Radiator Group, Diesel (001250-004037)

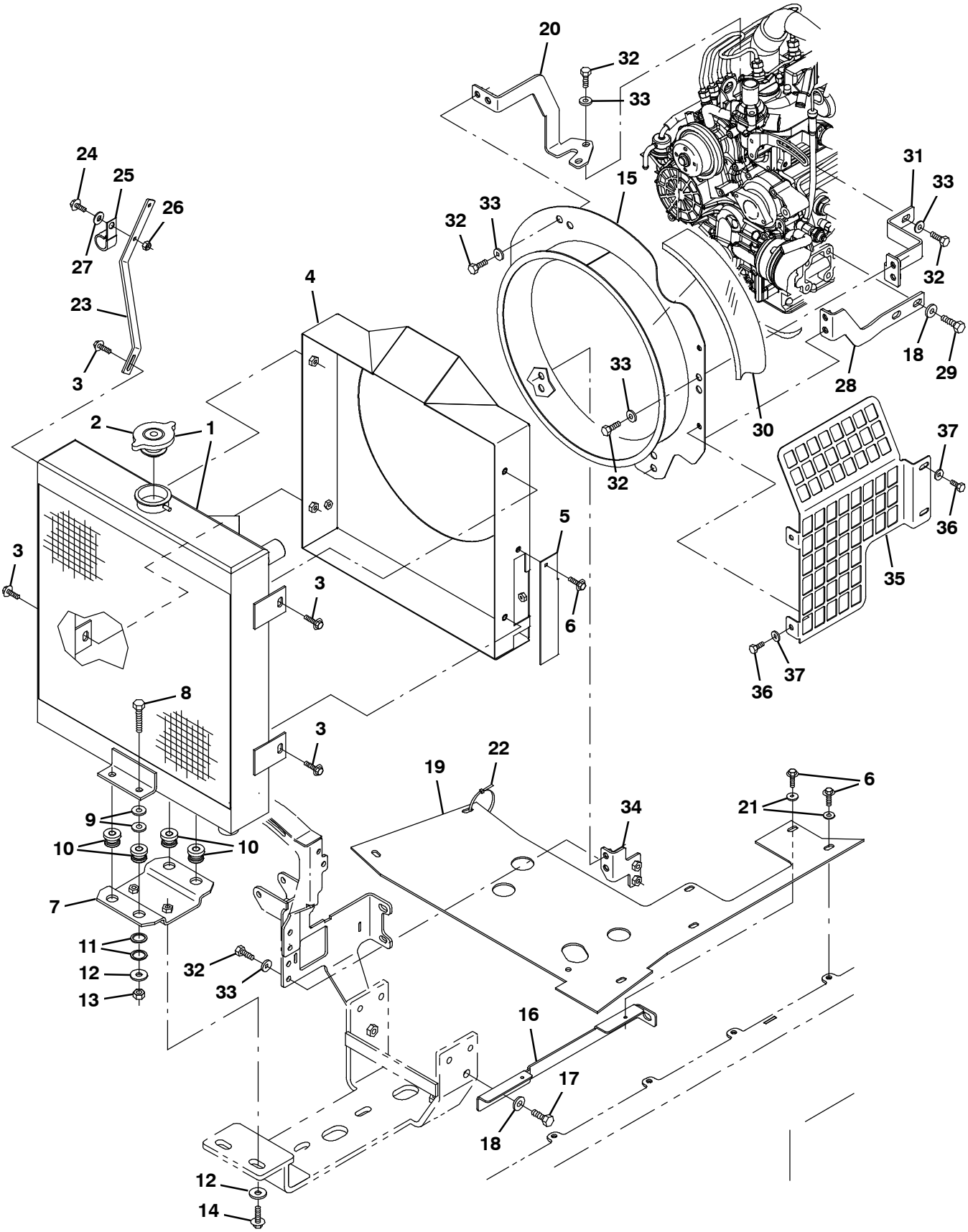

354709

Fig. 18 - Engine Radiator Group, Diesel (001250-004037)

	Ref.	Part No.	Serial Number	Description	Qty.
▽	1	1045940	(001250-004037)	Radiator, W/ Hyd Cooler [Side X Side]	1
▲	2	1045764	(001250-004037)	Cap, Radiator, 14 Psi [Stant]	1
	3	1037346	(001250-004037)	Screw, Hex, M8 X 1.25 X 25, 9.8, Sems	4
	4	9006814	(001250-004037)	Shrd Wldt,Fan,Dsl, Replmt [M20/M30/T20]	1
	4	9006815	(001250-004037)	Shrd Wldt,Fan,Dsl, Replmt [Ce]	1
	4	9006816	(001250-004037)	Shrd Wldt,Fan,Dsl, Replmt [Tj]	1
	5	1045433	(001250-004037)	Bracket, Cover	1
	6	1036892	(001250-004037)	Screw, Hex, M6 X 1.00 X 25, 9.8 Sems	6
	7	1046962	(001250-004037)	Bracket, Mtg, Radiator	1
	8	06962	(001250-004037)	Screw, Hex, M10 X 1.50 X 45, 8.8	4
	9	32492	(001250-004037)	Washer, Flat, 0.38, Std	8
	10	54274	(001250-004037)	Isolator, Vib, Bshg, 1.1d 0.6l .4b 0.78h	4
	11	09832	(001250-004037)	Washer, Flat, 0.81b 1.06d .06, Stl	8
	12	1014563	(001250-004037)	Washer, Flat, 0.40b 1.12d .12, Ss	6
	13	41430	(001250-004037)	Nut, Hex, Lock, M10 X 1.5, Nl	4
	14	1037355	(001250-004037)	Screw, Hex, M8 X 1.25 X 35, 9.8, Sems	2
	15	1046801	(001250-004037)	Shroud Wldt, Fan, Dsl	1
	16	1043908	(001250-004037)	Bracket, Mtg, Skirt, Rbr, Dsl	1
	17	39283	(001250-004037)	Screw, Hex, M10 X 1.50 X 25, 8.8	1
	18	32485	(001250-004037)	Washer, Flat, 0.38, Sae	3
	19	1049882	(001250-004037)	Skirt, Debris, Dsl, Radiator	1
	20	1046492	(001250-004037)	Bracket, Shrd, Fan, Upper	1
	21	41178	(001250-004037)	Washer, Flat, 0.25, Fendr	3
	22	49266	(001250-004037)	Tie, Cable, Nyl, 07.3l .19w 1.8 Max D	2
	23	1049355	(001250-004037)	Bracket, Mtg, Radiator	1
	24	06942	(001250-004037)	Screw, Hex, M6 X 1.00 X 16, 8.8	1
	25	30407	(001250-004037)	Clip, Keeper, Open	1
	26	08708	(001250-004037)	Nut, Hex, Lock, M6 X 1.00, Nl	1
	27	32490	(001250-004037)	Washer, Flat, 0.25, Std	1
	28	1046247	(001250-004037)	Bracket, Shrd, Fan, Lh	1
	29	07299	(001250-004037)	Screw, Hex, M10 X 1.25 X 25, 8.8	2
	30	1044898	(001250-004037)	Insulation, Acstc, 0.05, 46.6 X 02.1	1
	31	1046282	(001250-004037)	Bracket, Shrd, Fan, Upper, Lh	1
	32	16931	(001250-004037)	Screw, Hex, M8 X 1.25 X 20, 8.8	13
	33	32491	(001250-004037)	Washer, Flat, 0.31, Std	13
	34	1046261	(001250-004037)	Bracket, Shrd, Fan, Rh	1
	35	1050913	(001250-004037)	Guard, Fan, Dsl, (CE Only)	1
	36	06942	(001250-004037)	Screw, Hex, M6 X 1.00 X 16, 8.8 (CE Only)	4
	37	32490	(001250-004037)	Washer, Flat, 0.25, Std (CE Only)	4

Fig. 19 - Engine Radiator Group, Diesel (004038-)

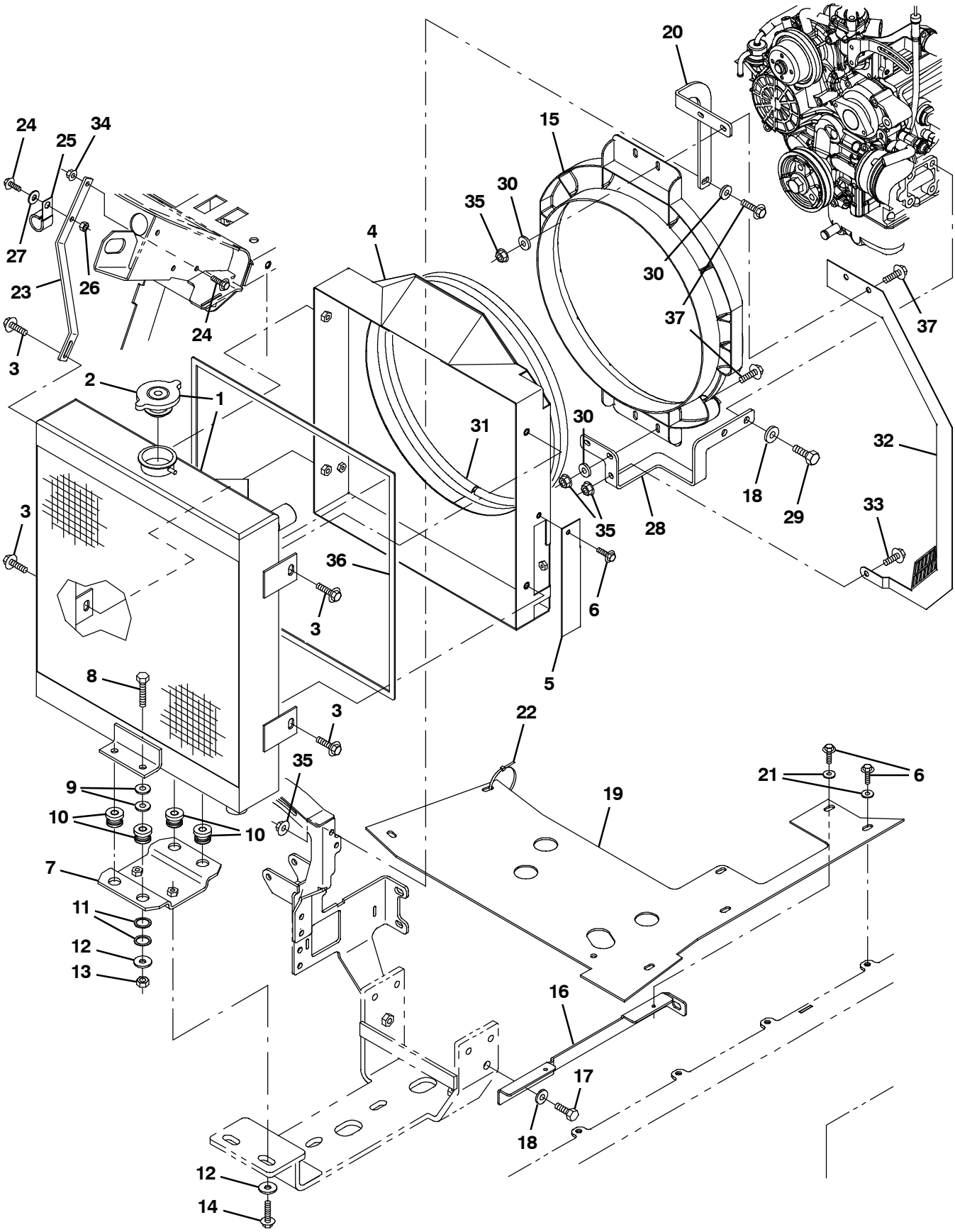

354709 - M30

Fig. 19 - Engine Radiator Group, Diesel (004038-)

	Ref.	Part No.	Serial Number	Description	Qty.
▽	1	1045940	(004038-)	Radiator, W/ Hyd Cooler [Side X Side]	1
▲	2	1045764	(004038-)	Cap, Radiator, 14Psi [Stant]	1
	3	1037346	(004038-)	Screw, Hex, M8 X 1.25 X 25, 9.8, Sems	4
	4	1058699	(004038-)	Shroud Wldt, Fan, Eng, Dsl	1
	5	1045433	(004038-)	Bracket, Cover	1
	6	1036892	(004038-)	Screw, Hex, M6 X 1.00 X 25, 9.8 Sems	6
	7	1046962	(004038-)	Bracket, Mtg, Radiator	1
	8	39285	(004038-)	Screw, Hex, M10 X 1.50 X 40, 8.8	4
	9	32492	(004038-)	Washer, Flat, 0.38, Std	8
	10	54274	(004038-)	Isolator, Vib, Bshg, 1.1d 0.6l .4b 0.78h	4
	11	09832	(004038-)	Washer, Flat, 0.81b 1.06d .06, Stl	8
	12	1014563	(004038-)	Washer, Flat, 0.40b 1.12d .12, Ss	6
	13	41430	(004038-)	Nut, Hex, Lock, M10 X 1.5, Nl	4
	14	1037355	(004038-)	Screw, Hex, M8 X 1.25 X 35, 9.8, Sems	2
	15	1054428	(004038-)	Shroud, Fan	1
	16	1043908	(004038-)	Bracket, Mtg, Skirt, Rbr, Dsl	1
	17	39283	(004038-)	Screw, Hex, M10 X 1.50 X 25, 8.8	1
	18	32485	(004038-)	Washer, Flat, 0.38, Sae	3
	19	1049882	(004038-)	Skirt, Debris, Dsl, Radiator	1
	20	1058732	(004038-)	Bracket, Mtg, Fan, Shrd, Upper, Dsl	1
	21	41178	(004038-)	Washer, Flat, 0.25, Fendr	3
	22	49266	(004038-)	Tie, Cable, Nyl, 07.3l .19w 1.8 Max D	2
	23	1049355	(004038-)	Bracket, Mtg, Radiator	1
	24	1040467	(004038-)	Screw, Hex, M6 X 1.00 X 20, 9.8, Sems	2
	25	30407	(004038-)	Clip, Keeper, Open	1
	26	08708	(004038-)	Nut, Hex, Lock, M6 X 1.00, Nl	1
	27	32490	(004038-)	Washer, Flat, 0.25, Std	1
	28	1058730	(004038-)	Bracket, Mtg, Fan, Shrd, Lower, Dsl	1
	29	07299	(004038-)	Screw, Hex, M10 X 1.25 X 25, 8.8	2
	30	32492	(004038-)	Washer, Flat, 0.38, Std	7
	31	376735	(004038-)	Seal, Bulb, Str, 0.38h .75w Adh, 52 L	1
	32	1064434	(004038- 004102)	Bracket, Shrd, Radiator, Dsl, Ce	1
	32	1073176	(004103-)	Bracket, Shrd, Radiator, Dsl, Ce	1
	33	1020341	(004038-)	Screw, Hex, M8 X 1.25 X 20, Ss, Sems	1
	34	07790	(004038-)	Nut, Hex, Flng, M6 X 1.00	1
	35	07791	(004038-)	Nut, Hex, Flng, M8 X 1.25	6
	36	367812	(004038-)	Seal, Rbr, Clsd, .13, .38w 72.0l, Adh	1
	37	1037346	(004038-)	Screw, Hex, M8 X 1.25 X 25, 9.8, Sems	5

Fig. 20 - Engine Radiator Hose Group, Diesel (001250-)

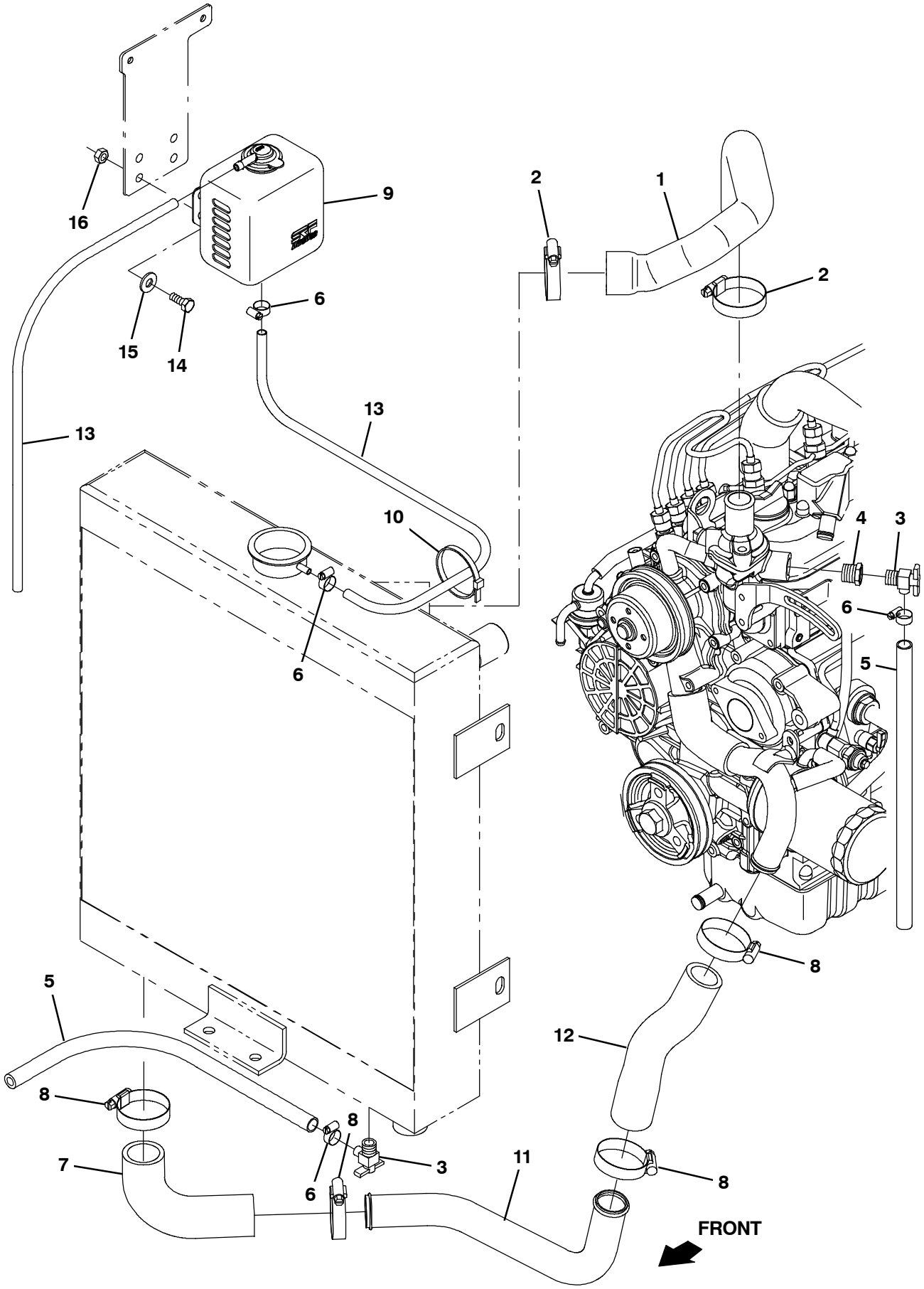

356405 - M30

Fig. 20 - Engine Radiator Hose Group, Diesel (001250-)

Ref.	Part No.	Serial Number	Description	Qty.
1	1071195	(001250-)	Hose, Radiator, Upper, Dsl	1
2	11399	(001250-)	Clamp, Hose, Wormdrive, 0.81- 1.50d, .50w	2
3	51305	(001250-)	Fitting, Draincock, E90, .25npt	2
4	150006	(001250-)	Fitting, Brs, Str, Pf04/Pm06, Bshg	1
5	73471	(001250-)	Hose, Pvc, Clr, 0.38id 0.56od 022.0l	2
6	43844	(001250-)	Clamp, Hose, Wormdrive, 0.25- 0.62d, .31w	4
7	1007482	(001250-)	Hose, Rbr, E90, 1.25id 1.25id 04.2 03.1	1
8	79381	(001250-)	Clamp, Hose, Wormdrive, 1.25- 2.00D, .50W	4
9	1023853	(001250- 001320)	Tank, Coolant, 03.30w 4.7hi 04.7l,1liter	1
9	1054382	(001321-)	Tank, Coolant, 03.6W 04.1Hl 05.5L,1Liter	1
10	49266	(001250-)	Tie, Cable, Nyl, 07.3l .19w 1.8 Max D	2
11	1041494	(001250-)	Tube, Radiator, Lower, Dsl [M30]	1
12	1041054	(001250-)	Hose, Rbr, Adapter, 1.25id 1.12id	1
13	1015041	(001250-)	Hose, Afmkt, Coolant Recvy, 08ft	1
14	16931	(001250-)	Screw, Hex, M8 X 1.25 X 20, 8.8	2
15	32491	(001250-)	Washer, Flat, 0.31, Std	2
16	08709	(001250-)	Nut, Hex, Lock, M8 X 1.25, Nl	2

Fig. 21 - Battery and Electrical Group

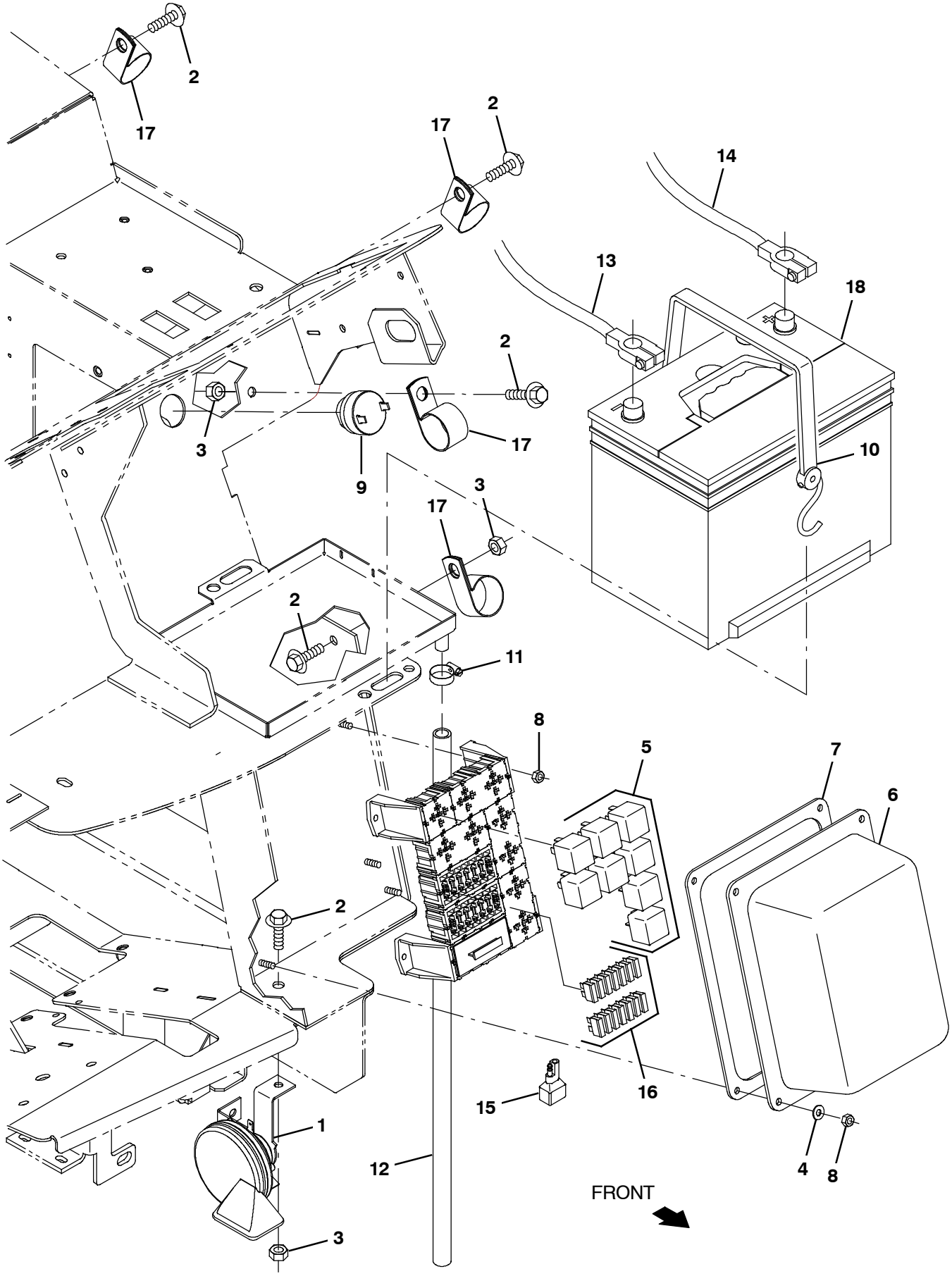

354606, D

Fig. 21 - Battery and Electrical Group

Ref.	Part No.	Serial Number	Description	Qty.
1	369704	(000000-)	Horn, 12vdc, Dba [Wolo]	1
2	1037346	(000000-)	Screw, Hex, M8 X 1.25 X 25, 9.8, Sems	5
3	08709	(000000-)	Nut, Hex, Lock, M8 X 1.25, Nl	3
4	19066	(000000-)	Washer, Flat, 10	4
5	57804	(000000-)	Relay, 12vdc, 040a, Spdt No	8
6	1024274	(000000-)	Cover, Fuse, Block	1
7	1026576	(000000-)	Gasket, .13, 07.68w 09.45l, Adh [Poron]	1
8	06549	(000000-)	Nut, Hex, Lock, M5 X 0.80, Nl	8
9	1021290	(000000-)	Alarm, Warning [Sonalert, St628]	1
10	33671	(000000-)	Strap, Rbr, Tie- Down, 19.0l, 2/ Hook	1
11	54333	(000000-)	Clamp, Hose, Wormdrive, 0.31- 0.88d, .31w	1
12	20778	(000000-)	Hose, Pvc, Clr, 0.50id 0.69od 030.0l	1
13	60295	(000000-)	Cable, Battery, 02ga 60.0l Blk .41ring	1
14	68869	(000000-)	Cable, Battery, 02ga 48.0l Red .41ring	1
15	222290	(000000-)	Diode, Ele, Plug	1
16	762514	(000000-)	Fuse, Blade, 15a, 32vdc	14
17	53466	(000000-)	Clamp, Cable, Stl, 1.50d X 1.00w, 1hole	4
18	10143	(000000-)	Battery, Wet, 12vdc 0600cca	1

Fig. 22 - Wheel Group, Front Drive

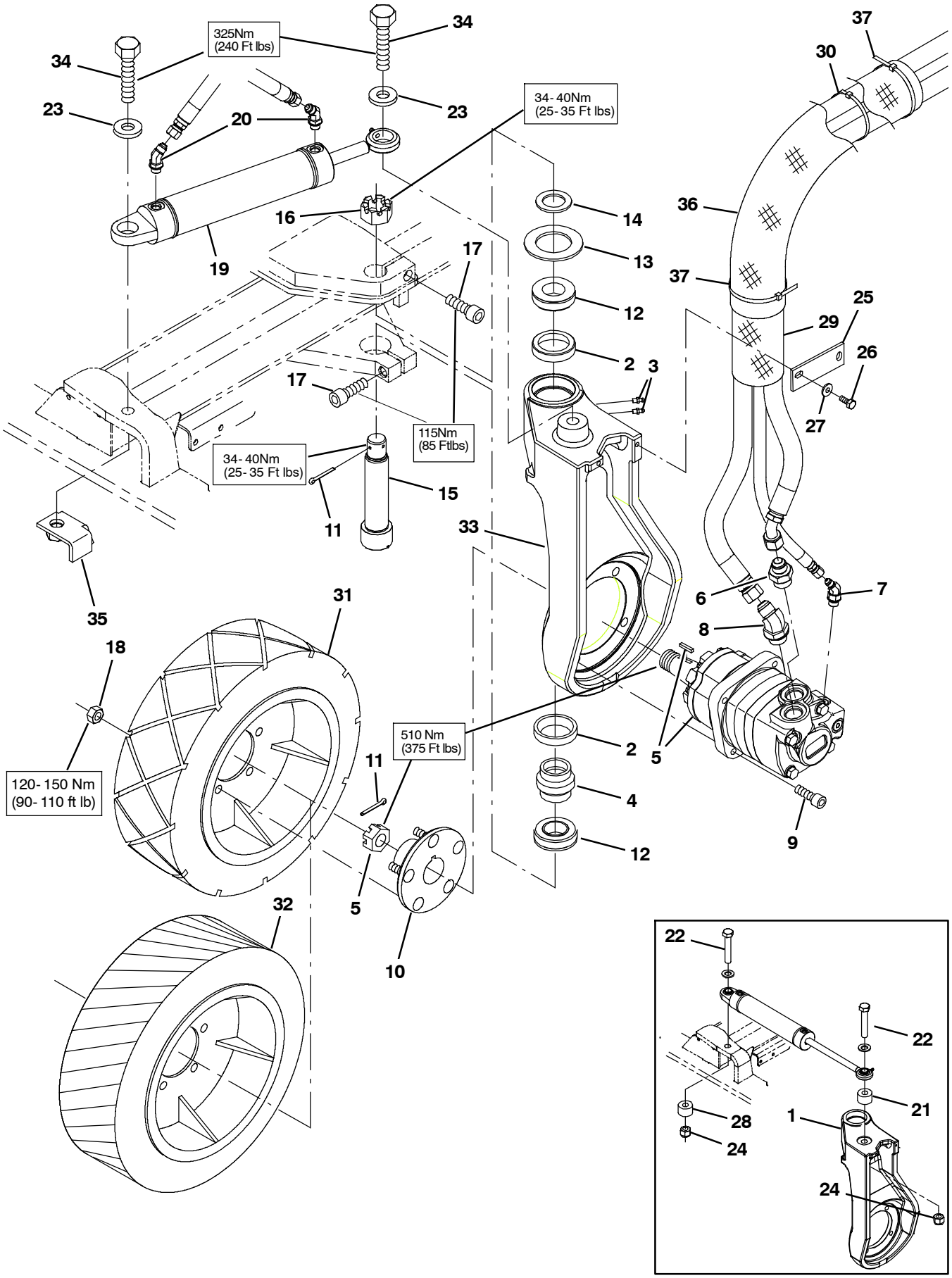

354607- M30

Fig. 22 - Wheel Group, Front Drive

	Ref.	Part No.	Serial Number	Description	Qty.
	1	9008248	(000000- 001653)	Housing Kit, Drive, Front, Replmt	1
	2	51338	(000000-)	Bearing, Cup, 2.56d 0.55w	2
	3	47801	(000000-)	Fitting, Grease, Str Pm04 .63l	2
	4	374560	(000000-)	Seal, Drive, Rear, Grease Cav	1
	5	379609	(000000-)	Motor, Hyd, Gear, Int 19.0 Bi- Dir 3000 (See Breakdowns)	1
	6	42223	(000000-)	Fitting, Hyd, Str, Jm10/Om12	1
	7	393215	(000000-)	Fitting, Hyd, E45, Jm04/Om06	1
	8	1024249	(000000-)	Fitting, Hyd, E45, Jm10/Om12	1
	9	19583	(000000-)	Screw, Soc, .50- 13 X 1.50, Al	4
▽	10	54087	(000000-)	Hub Assy, Wheel, 5 Bolt 4.50bc Taper B	1
▲		32126	(000000-)	Stud, Wheel, .50- 20 X 1.50l, 0.370th	5
	11	08180	(000000-)	Pin, Cotter, .125 X 2.00	2
	12	51339	(000000-)	Bearing, Cone, 1.38b 0.71w	2
	13	374563	(000000-)	Washer, Flat, 2.16b 3.50d .16, Felt	1
	14	54051	(000000-)	Washer, Flat, 1.39b 2.12d .13, Stl	1
	15	73281	(000000-)	Bolt, Shld, 1.37d X 5.13l,1.1- 18 Drilled	1
	16	54052	(000000-)	Nut, Hex, Sltd, 1.12- 18	1
	17	72926	(000000-)	Screw, Soc, M16 X 2.0 X 50, 12.9	2
	18	24339	(000000-)	Nut, Wheel, .50- 20 X 60 Angle	5
	19	1017903	(000000- 004454)	Cylinder, Hyd, 2.0b,15.2l,09.00strk,3000	1
	19	1034270	(004455-)	Cylinder, Hyd, 2.0b,15.2l,09.00strk,3000	1
	20	47522	(000000-)	Fitting, Hyd, E45, Jm06/Om06	2
	21	71340	(000000- 001653)	Tube, Rnd, 1.75d 0.77b 01.1l, Stl, Pntd	1
	22	71341	(000000- 001653)	Screw, Hex, .75- 10 X 4.00, 5	2
	23	39350	(000000- 004454)	Washer, Flat, 0.75 Sae	2
	23	1073487	(004455-)	Washer, Flat, .781b 1.63od .16, Stl, Blk	2
	24	32987	(000000- 001653)	Nut, Hex, Lock, .75- 10, Nl	2
	25	58842	(000000-)	Bar, Flat, Stl 0.19, 01.50 X 04.1l	1
	26	16931	(000000-)	Screw, Hex, M8 X 1.25 X 20, 8.8	2
	27	32491	(000000-)	Washer, Flat, 0.31, Std	2
	28	1034806	(000000-)	Tube, 0.77id 1.75od 00.7l, Stl, Pntd	1
	29	57315	(000000-)	Sleeve, Nyl, #37 05.0l	2
	30	49266	(000000-)	Tie, Cable, Nyl, 07.3l .19w 1.8 Max D	1
	31	1059343	(000000-)	Tire, Drive, Scrbr, Non- Skid, 18.0X6.0	1
	32	1061973	(000000-)	Tire, Drive, Scrbr, Pu, Grey, 18.0X6.0 (Optional Polyurethane)	1
	33	1071061	(001654-)	Housing, Sppt, Front Wheel	1
	34	77345	(001654-)	Screw, Hex, .75- 10 X 3.25, G5	2
	35	1060521	(001654-)	Bracket, Mtg, Sppt	1
	36	82832	(004000-)	Sleeve, Nyl, 2.38id 25.0l	1
	37	49266	(004000-)	Tie, Cable, Nyl, 07.3l .19w 1.8 Max D	2

Fig. 23 - Wheel and Brake Group

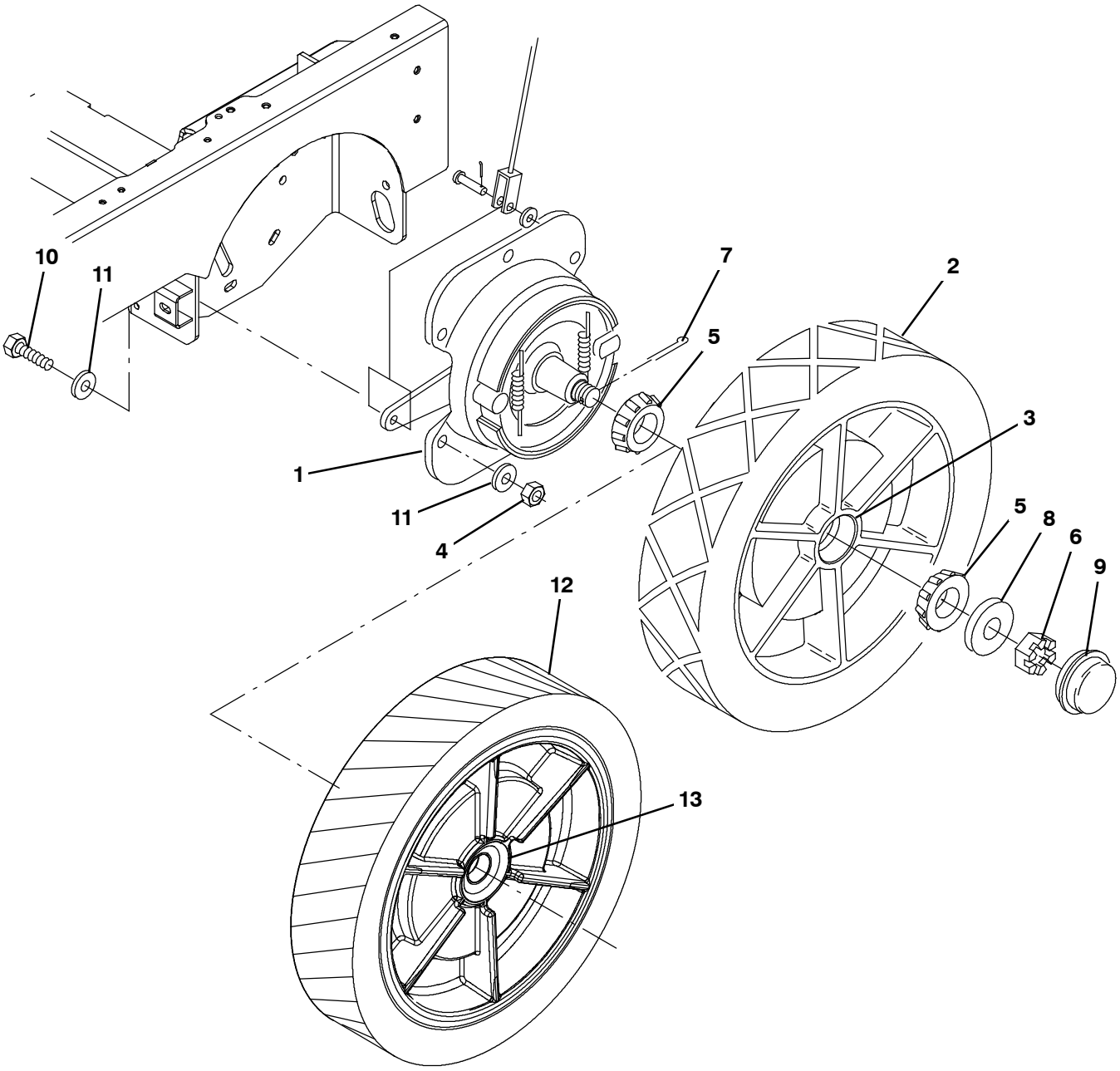

354608

Fig. 23 - Wheel and Brake Group

	Ref.	Part No.	Serial Number	Description	Qty.
▽	1	54577	(000000-)	Brake Assy, Drum, Mech, 07.9d [6600]]	2
▲		66211	(000000-)	Shoe Set, Brake [1 Set=1pkg=2 Shoes]	2
▲▽		66213	(000000-)	Brake Kit, Repair	1
▲▲		70161	(000000-)	Shaft	1
▲		70158	(000000-)	Spring	2
▽	2	1059544	(000000-)	Tire Assy, Solid, 18.0 X 5.0, Idler (Standard)	2
▲	3	51338	(000000-)	Bearing, Cup, 2.56d 0.55w	2
▽	2	1059344	(000000-)	Tire Assy, Solid, 18.0 X 5.0,Hi Traction (Option)	2
▲	3	51338	(000000-)	Bearing, Cup, 2.56d 0.55w	2
▽	2	1059545	(000000-)	Tire Assy, Solid, 18.0X5.0, Non- Marking (Option)	2
▲	3	51338	(000000-)	Bearing, Cup, 2.56d 0.55w	2
	4	08711	(000000-)	Nut, Hex, Lock, M12 X 1.75, Nl	12
	5	51339	(000000-)	Bearing, Cone, 1.38b 0.71w	4
	6	14242	(000000-)	Nut, Hex, Sltd, 1.00- 20	2
	7	08202	(000000-)	Pin, Cotter, .125 X 1.75	2
	8	32969	(000000-)	Washer, Flat, 1.00, Sae	2
	9	54390	(000000-)	Cap, Hub, Dust, 2.57d 0.77l	2
	10	06969	(000000-)	Screw, Hex, M12 X 1.75 X 40, 8.8	12
	11	32486	(000000-)	Washer, Flat, 0.50, Sae	24
▽	12	1062102	(000000-)	Tire, Idler, Scrbr, Pu, Grey, 18.0X5.0 (Polyurethane)	2
▲	13	51338	(000000-)	Bearing, Cup, 2.56d 0.55w	2

Fig. 24 - Brake Pedal Linkage Group

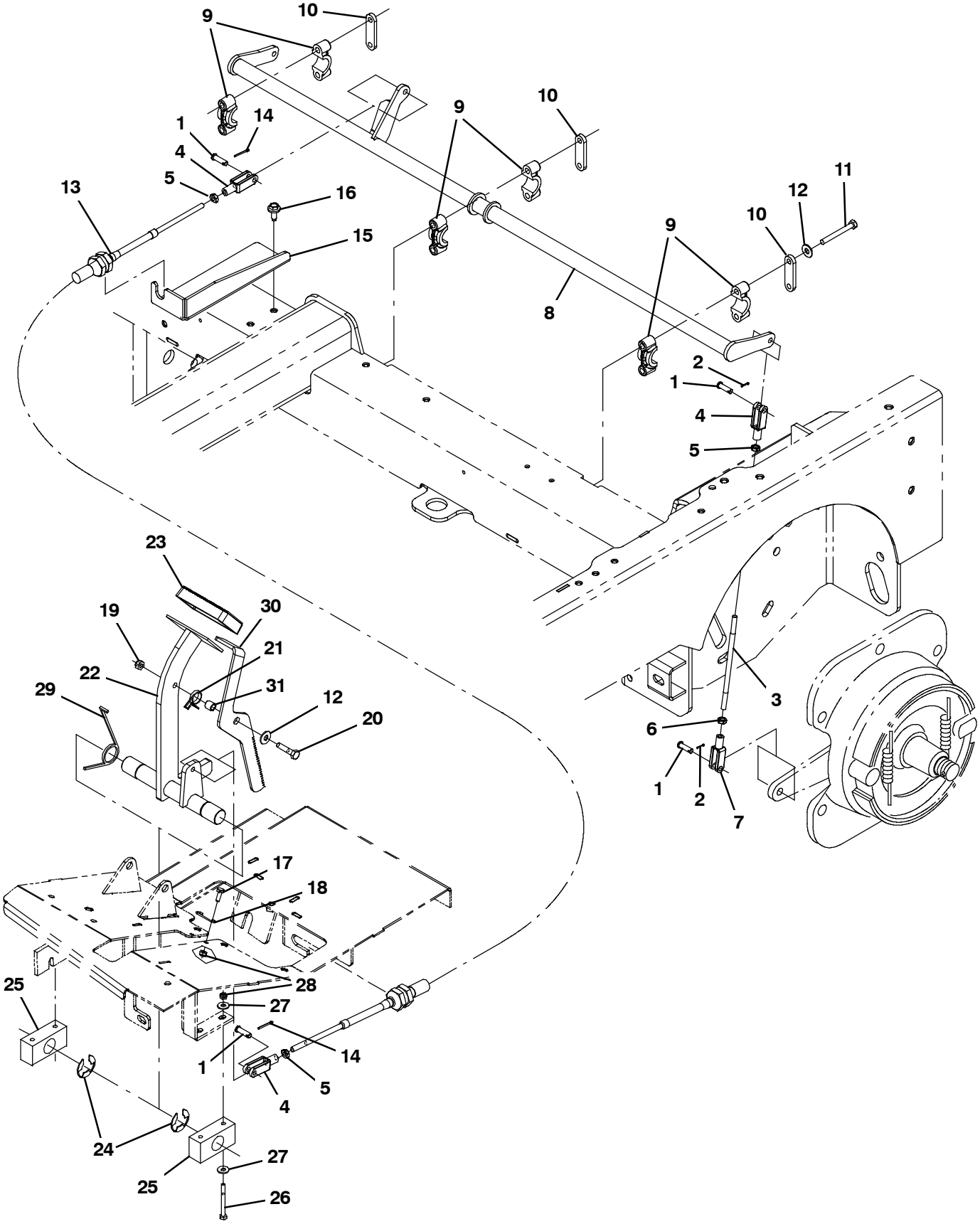

354609

Fig. 24 - Brake Pedal Linkage Group

Ref.	Part No.	Serial Number	Description	Qty.
1	69582	(000000-)	Pin, Clevis, 0.31d X 1.00l	6
2	08170	(000000-)	Pin, Cotter, .062 X 0.50	4
3	1034409	(000000-)	Rod, Thrd, 2 End, .31- 24 7.0l, Pl	2
4	58311	(000000-)	Clevis, Adj, 0.31pin, 0.31- 24	4
5	20170	(000000-)	Nut, Hex, Jam, .31- 24	4
6	381910	(000000-)	Nut, Hex, Jam, .31- 24, Lh	2
7	1037933	(000000-)	Clevis, Adj, 0.31pin, 0.31- 24, Lh	2
8	1033812	(000000-)	Shaft Wldt, Brake	1
9	381502	(000000-)	Bearing, Split, 1.00b	6
10	382224	(000000-)	Plate, Sppt	3
11	39279	(000000-)	Screw, Hex, M8 X 1.25 X 70, 8.8	6
12	32491	(000000-)	Washer, Flat, 0.31, Std	7
13	1034454	(000000-)	Cable, Push / Pull, 068.0l	1
14	08179	(000000-)	Pin, Cotter, .094 X 1.00	2
15	1022736	(000000-)	Bracket, Mtg, Cable	1
16	1037346	(000000-)	Screw, Hex, M8 X 1.25 X 25, 9.8, Sems	2
17	06942	(000000-)	Screw, Hex, M6 X 1.00 X 16, 8.8	2
18	71367	(000000-)	Spring, Wir, 0.08d, Parking Brake	1
19	08709	(000000-)	Nut, Hex, Lock, M8 X 1.25, Nl	1
20	06955	(000000-)	Screw, Hex, M8 X 1.25 X 35, 8.8	1
21	59009	(000000-)	Spring, Tors, 0.75id .06wir 02.8coil	1
22	1022243	(000000-)	Shaft Wldt, Pedal, Brake	1
23	51109	(000000-)	Pad, Pedal, Brake, 3.96l 2.36w 0.75	1
24	23788	(000000-)	Ring, Retaining, Ext, 0.98d, [E- Ring]	2
25	86751	(000000-)	Bearing, Pillowblock, 1.02b [Solid Pye]	2
26	06548	(000000-)	Screw, Hex, M6 X 1.00 X 60, 8.8	4
27	32490	(000000-)	Washer, Flat, 0.25, Std	8
28	08708	(000000-)	Nut, Hex, Lock, M6 X 1.00, Nl	6
29	54607	(000000-)	Spring, Tors, 1.13id .12wir 2.3coil, Rh	2
30	1025487	(000000-)	Pedal, Brake, Lock	1
31	46563	(000000-)	Bushing, Sleeve, 0.37b 0.50d 0.50l, Oib	1

Fig. 25 - Directional Pedal and Linkage Group

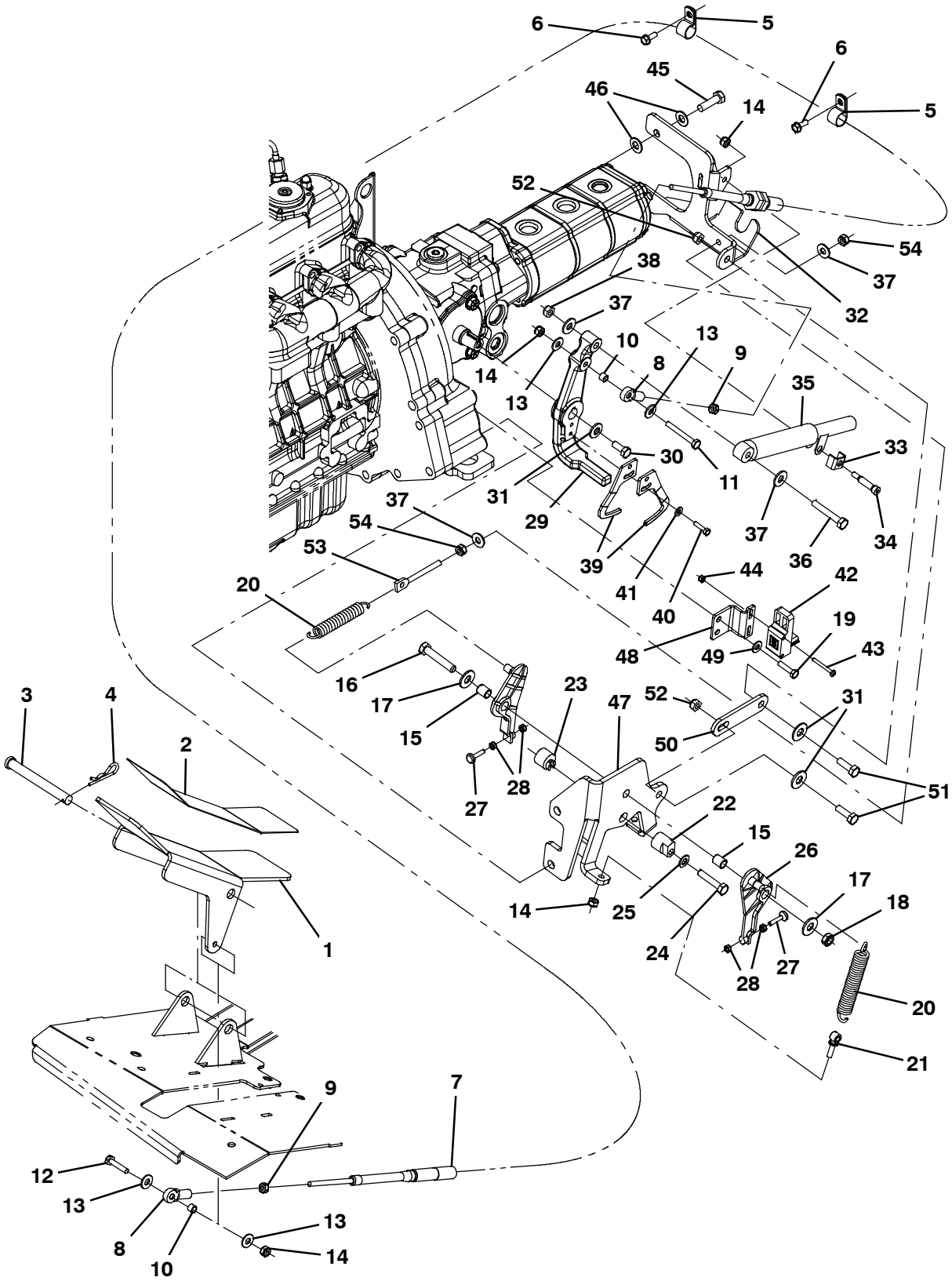

Ref.	Part No.	Serial Number	Description	Qty.
1	1025140	(000000-)	Pedal, Propel	1
2	58819	(000000-)	Tread, Non- Skid, 03.0w 11.6l	1
3	59668	(000000-)	Pin, Clevis, 0.50 D X 4.50l	1

354493 - D

Fig. 25 - Directional Pedal and Linkage Group

Ref.	Part No.	Serial Number	Description	Qty.
4	08182	(000000-)	Pin, Cotter, .125 X 1.00	1
5	67767	(000000-)	Clamp, Cable, Stl, 0.69d X 0.62w, 1h	2
6	361339	(000000-)	Screw, Hex, M6 X 1.0 X 16, Fmg	2
7	1022345	(000000-)	Cable, Push / Pull, 098.0l .25- 28/.25- 28	1
8	68866	(000000-)	Rod- End, .25- 28rh Fem 0.25b [Teflon]	2
9	01714	(000000-)	Nut, Hex, Std, .25- 28	2
10	65441	(000000-)	Tube, 00.38d 00.26b 00.3l Stl Plt	2
11	41399	(000000-)	Screw, Hex, .25- 20 X 2.25, Ss	1
12	42180	(000000-)	Screw, Hex, .25- 20 X 1.75, Ss	1
13	32490	(000000-)	Washer, Flat, 0.25 Std	5
14	41169	(000000-)	Nut, Hex, Lock, .25- 20, Nl, Ss	4
15	63234	(000000-)	Tube, 00.50d 00.38b 00.6l Stl	2
16	42467	(000000-)	Screw, Hex, .38- 16 X 2.00, Ss	1
17	32492	(000000-)	Washer, Flat, 0.38 Std	2
18	36643	(000000-)	Nut, Hex, Lock, .38- 16, Nl, Thin	1
19	21197	(000000-)	Screw, Hex, .38- 16 X 1.00, 5	2
20	11842	(000000-)	Spring, Extn, 0.75od X 0.12wir, 4.3l	2
21	48079	(000000-)	Bolt, Eye, .25- 20 X 1.40 X .25 Eye	1
22	53947	(000000-)	Cam, Centering, Pintle	1
23	54655	(000000-)	Cam, Centering, Pintle	1
24	74440	(000000-)	Screw, Hex, M8 X 1.25 X 40, Ss, Nl	1
25	39349	(000000-)	Washer, Flat, 0.31 Sae	1
26	53953	(000000-)	Arm, Cntrl, Pintle, Centering	2
27	54205	(000000-)	Bumper, Rbr, 0.5d 0.16t M5 X 08	2
28	50335	(000000-)	Nut, Hex, Std, M5 X 0.8, 8	4
29	1027233	(000000-)	Arm, Pintle	1
30	83879	(000000-)	Screw, Hex, .31- 24 X 0.75, Nl	1
31	41186	(000000-)	Washer, Belleville, .31	3
32	1027313	(000000-)	Bracket Wldt, Propel, Pintle	1
33	84170	(000000-)	Bracket, Retainer, Safety	1
34	16213	(000000-)	Bolt, Shld, .31d X 1.00, .25- 20	1
35	73411	(000000-)	Shock Absorber, 2.3 Strk	1
36	39278	(000000-)	Screw, Hex, M8 X 1.25 X 50, 8.8	1
37	32491	(000000-)	Washer, Flat, 0.31 Std	2
38	08709	(000000-)	Nut, Hex, Lock, M8 X 1.25, Nl	1
39	1022787	(000000-)	Arm [Positioning]	2
40	09252	(000000-)	Screw, Hex, M5 X 0.8 X 20, 8.8	2
41	01683	(000000-)	Washer, Flat, #10 Ss	2
42	1022779	(000000-)	Sensor, Spd / Dir, 6- 30vdc	1
43	09198	(000000-)	Screw, Pan, M4 X 0.7 X 35, Ss	2
44	33932	(000000-)	Nut, Hex, Lock, M4 X 0.7, Nl, Ss	2
45	21198	(000000-)	Screw, Hex, .38- 16 X 1.25, G5	2
46	32485	(000000-)	Washer, Flat, 0.38 Sae	4
47	1027692	(000000-)	Bracket, Propel, Dsl	1
48	1027742	(000000-)	Bracket, Mtg, Sensor	1
49	32483	(000000-)	Washer, Flat, 0.25, Sae	2
50	1032399	(000000-)	Strap, Sppt	1
51	09010	(000000-)	Screw, Hex, M8 X 1.25 X 25, Ss	2
52	08713	(000000-)	Nut, Hex, Lock, M8 X 1.25, Nl, Ss	2
53	386088	(000000-)	Bolt, Eye, M8X1.25, 2.75L	1
54	07786	(000000-)	Nut, Hex, Std, M8 X 1.25, Ss	2

Fig. 26 - Hopper Lift Arms Group

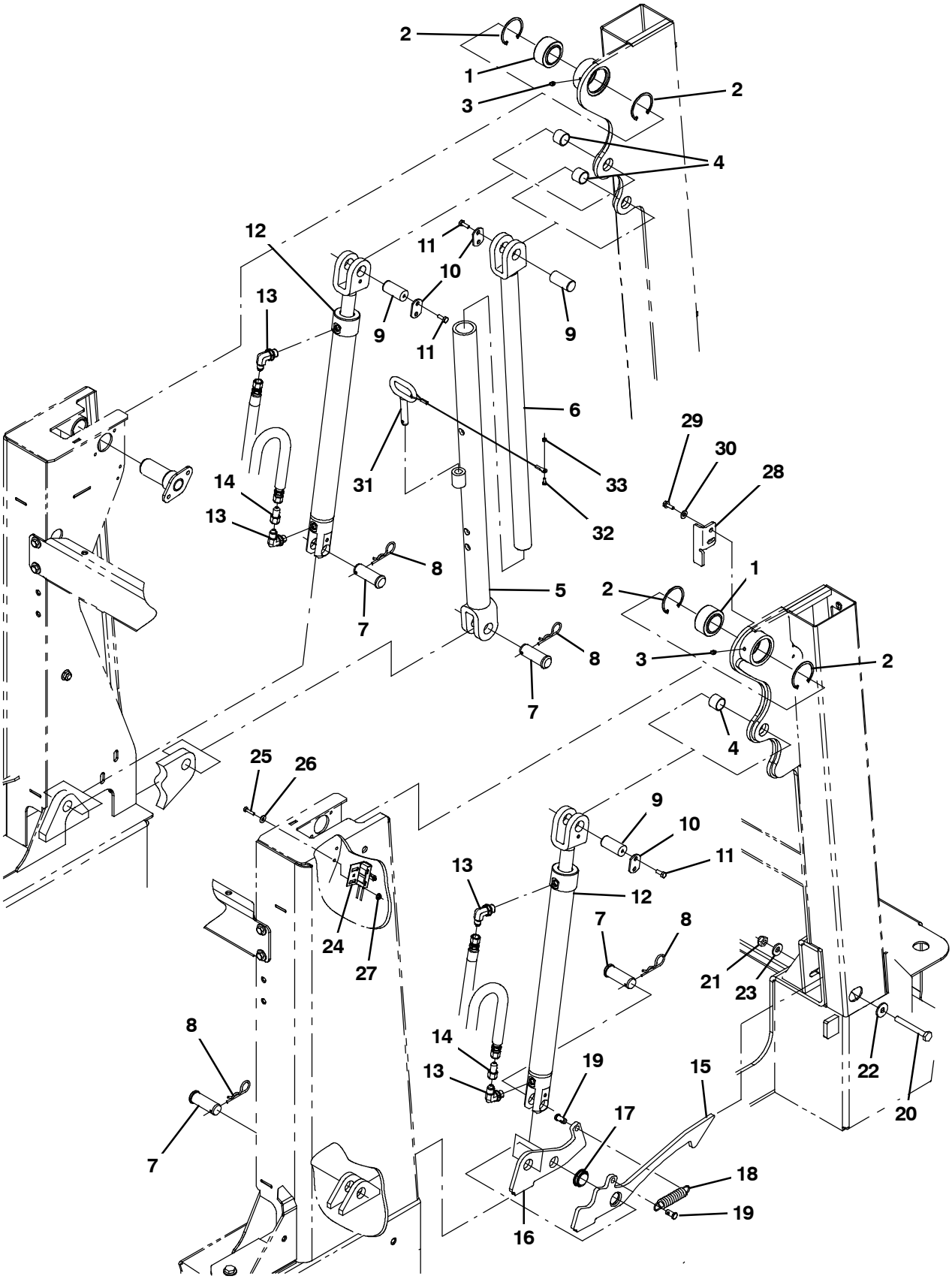

354610

Fig. 26 - Hopper Lift Arms Group

Ref.	Part No.	Serial Number	Description	Qty.
1	42120- 1	(000000-)	Bearing, Self Align, 1.25b 2.00d	2
2	59542	(000000-)	Ring, Retaining, Int, 2.00d	4
3	07259	(000000-)	Fitting, Grease, Str Pm04 .47l	2
4	364587	(000000-)	Bushing, Sleeve, 0.88b 1.00d 0.75l, Bnz	3
5	1040818	(000000-)	Tube Wldt, Arm, Safety	1
6	1040820	(000000-)	Rod Wldt, Arm, Safety	1
7	1018227	(000000-)	Pin, Clevis, 0.88d X 2.25l	4
8	02942	(000000-)	Pin, Cotter, Hair, 0.62d .120 Wir	4
9	1018226	(000000-)	Pin, 0.87d 01.8l, 1/M6 X 1.0, 1cham,Stl	3
10	72897	(000000-)	Plate, Pin, Clevis, Upper	3
11	06942	(000000-)	Screw, Hex, M6 X 1.00 X 16, 8.8	6
12	1029646	(000000-)	Cylinder, Hyd, 2.0B 24.1L 15.00Strk 3000	2
13	77097	(000000-)	Fitting, Hyd, E90, Jm04/Om04	4
14	1025904	(000000-)	Fitting, Hyd, Rst, Jf04/Jm04, .028	2
15	1034227	(000000-)	Plate, Bellcrank, Hppr, Lock	1
16	1036271	(000000-)	Plate, Bellcrank	1
17	1037827	(000000-)	Bushing, Flng, 0.87b 1.25d 0.38l	1
18	87816	(000000-)	Spring, Extn, 0.75od 0.09wir 02.5l	1
19	41305	(000000-)	Pin, Clevis, 0.37d X 0.75l	2
20	06965	(000000-)	Screw, Hex, M10 X 1.50 X 80, 8.8	1
21	08714	(000000-)	Nut, Hex, Lock, M10 X 1.5, Nl, Ss	1
22	1014563	(000000-)	Washer, Flat, 0.40b 1.12d .12, Ss	1
23	41187	(000000-)	Washer, Flat, Belleville, .38	1
24	23211	(000000-)	Switch, Snap, 15a No, Rlr	1
25	09252	(000000-)	Screw, Hex, M5 X 0.80 X 20, 8.8	2
26	19066	(000000-)	Washer, Flat, 10	2
27	07789	(000000-)	Nut, Hex, Flng, M5 X 0.80	2
28	1018240	(000000-)	Bracket, Mtg, Switch	1
29	361339	(000000-)	Screw, Hex, M6 X 1.00 X 16, Fmg	2
30	32483	(000000-)	Washer, Flat, 0.25, Sae	2
31	1018266	(000000-)	Pin, Arm, Safety	1
32	09206	(000000-)	Screw, Hex, M4 X 0.70 X 12, 8.8	1
33	02850	(000000-)	Nut, Hex, Lock, M4 X 0.70, Nl	1

Fig. 27 - Hopper and Debris Screen Group

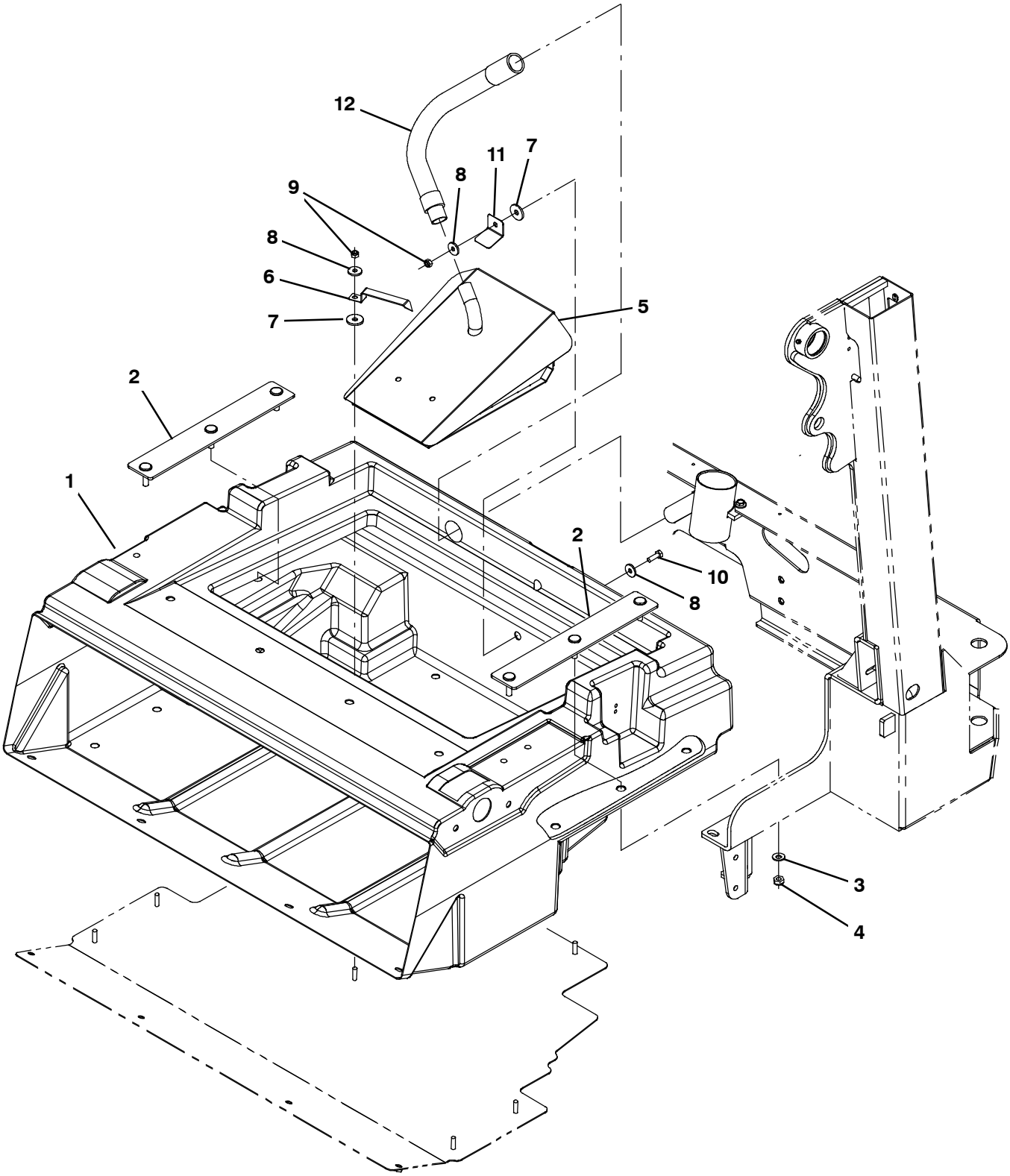

354611

Fig. 27 - Hopper and Debris Screen Group

Ref.	Part No.	Serial Number	Description	Qty.
1	1036419	(000000-)	Hopper, Debris [M30]	1
2	1018272	(000000-)	Bar, Mtg, Hppr	2
3	763042	(000000-)	Washer, Flat, Belleville, M10	6
4	08714	(000000-)	Nut, Hex, Lock, M10 X 1.5, Nl, Ss	6
5	1039163	(000000-)	Screen Wldt, Hppr	1
6	1044323	(000000-)	Spring, Flat, Retainer, Angled Screen	1
7	222268	(000000-)	Washer, Flat, 0.38b 1.25d .12, Neo	2
8	1017218	(000000-)	Washer, Flat, 0.32b 1.00d .12, Ss	3
9	08713	(000000-)	Nut, Hex, Lock, M8 X 1.25, Nl, Ss	2
10	09010	(000000-)	Screw, Hex, M8 X 1.25 X 25, Ss	1
11	1039215	(000000-)	Angle, Retainer	1
12	1018239	(000000-)	Hose Assy, W/1cuff, 1.0d 009l 1.0/	1

Fig. 28 - Hopper Cover and Dust Filter Group

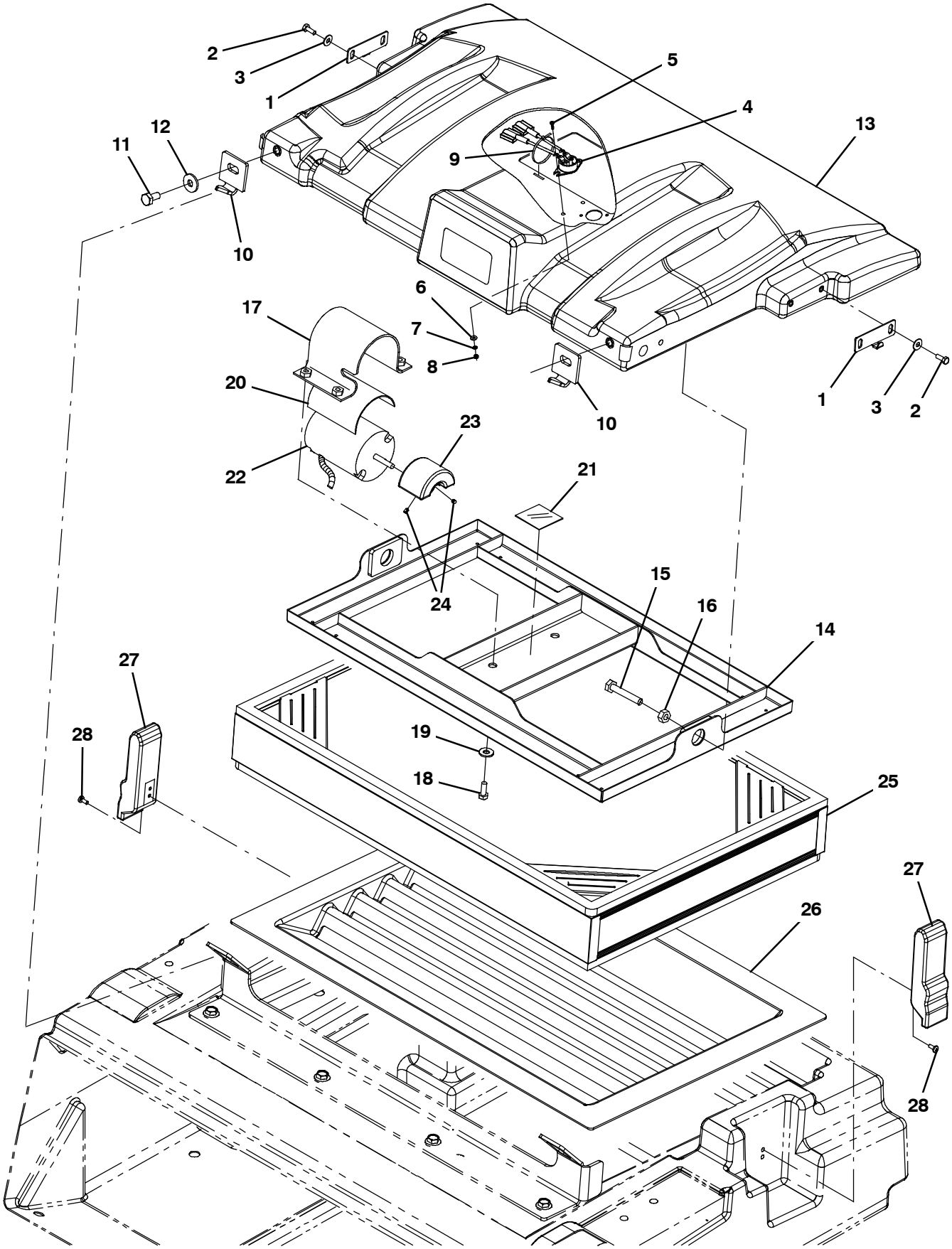

354612

Fig. 28 - Hopper Cover and Dust Filter Group

Ref.	Part No.	Serial Number	Description	Qty.
1	1046427	(000000-)	Bracket, Latch, Cover, Hppr	2
2	09744	(000000-)	Screw, Hex, M6 X 1.00 X 12, Ss	4
3	01684	(000000-)	Washer, Flat, 0.27b 0.69d .05, Ss	4
4	1036611	(000000- 001544)	Switch, Temp [160f]	1
4	1056298	(001545-)	Switch, Temp, Sealed, Nc	1
5	06922	(000000-)	Screw, Pan, Phl, M3 X 0.50 X 20, 4.8	2
6	19064	(000000-)	Washer, Flat, 06	2
7	32975	(000000-)	Washer, Lock, Int, 06	2
8	01754	(000000-)	Nut, Hex, Std, M3 X 0.50, 8	2
9	763116	(000000-)	Tie, Cable, Nyl, 15.3l . W 4.5 Max D	1
10	1018207	(000000-)	Bar, Mtg, Hppr Cover	2
11	09291	(000000-)	Screw, Hex, M10 X 1.50 X 20, Ss	2
12	1014563	(000000-)	Washer, Flat, 0.40b 1.12d .12, Ss	2
13	1041006	(000000-)	Cover, Hppr	1
14	1037235	(000000-)	Shaker Wldt	1
15	06963	(000000-)	Screw, Hex, M10 X 1.50 X 60, 8.8	2
16	39312	(000000-)	Nut, Hex, Std, M10 X 1.50	2
17	1037671	(000000-)	Strap, Mtg, Motor, .12 4.00w	1
18	09740	(000000-)	Screw, Hex, M8 X 1.25 X 20, Ss	4
19	01685	(000000-)	Washer, Flat, 0.38b 0.88d .08, Ss	4
20	36658	(000000-)	Strip, Rbr, 0.06 04.00w 05.0l [Neo/60]	1
21	36661	(000000-)	Strip, Rbr, 0.06 01.00w 04.0l	1
22	1041920	(000000- 001515)	Motor, Ele [12vdc, Shaker]	1
22	1059542	(001516-)	Motor, Ele, 12Vdc, Shakr	1
23	1049242	(000000- 001515)	Weight, Eccentric	1
23	1053320	(001516-)	Weight, Eccentric	1
24	20634	(000000-)	Screw, Set, Soc, 10- 24 X 0.25, Nl	2
25	1048295AM	(000000-)	Filter, Panl, Syn, 4.2 X 20.0 X 30.0	1
26	1037947	(000000-)	Tray, Perma- Filter	1
27	360824	(000000-)	Latch	2
28	09200	(000000-)	Screw, Pan, Phl, M5 X 0.80 X 12, Ss	4

Fig. 29 - Hopper Bumper Group

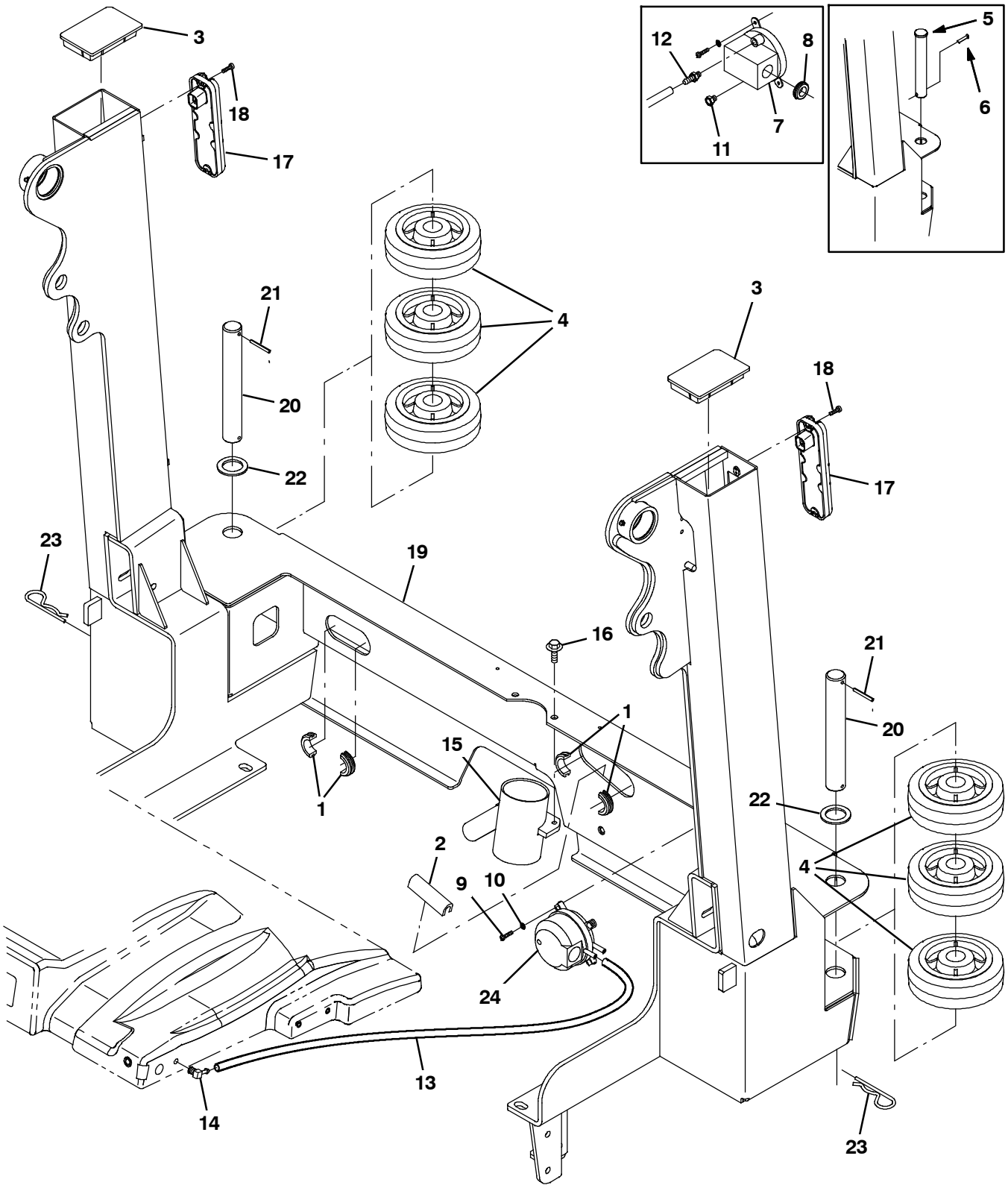

354613

Fig. 29 - Hopper Bumper Group

Ref.	Part No.	Serial Number	Description	Qty.
1	10632- 13	(000000-)	Grommet, Rbr, 1.50id, F/1.8h, .19 Matl	2
2	50646	(000000-)	Molding, Trim, Pvc, .18- .31 07.5l	1
3	1018293	(000000-)	Cap, Arm, Lift	2
4	1021047	(000000-)	Wheel, 06.0d 2.00w 1.19b, Gray Rbr	6
5	9006334	(000000- 001248)	Pin Kit, Wheel, Ci [M20/T20/M30]	2
6	08171	(000000- 001248)	Pin, Cotter, .156 X 2.00	2
7	39924	(000000- 001419)	Switch, Press, 0008psi Spdt	1
8	10632- 4	(000000- 001419)	Grommet, Rbr, 0.62id, F/0.9h, .06 Matl	1
9	12323	(000000-)	Screw, Pan, Phl, M4 X 0.70 X 20, Ss	2
10	02938	(000000-)	Washer, Lock, Int, 08, Ss	2
11	40607	(000000- 001419)	Fitting, Brs, Str, Bm03/Pm02	1
12	82739	(000000- 001419)	Fitting, Brs, Breather [02mp]	1
13	1031575	(000000-)	Hose, Afmkt, Vacuum, 0.16id, 03ft	1
14	32183	(000000-)	Fitting, Brs, E90, Bm03/Pm02	1
15	1036240	(000000-)	Tube, Vacuum	1
16	1037346	(000000-)	Screw, Hex, M8 X 1.25 X 25, 9.8, Sems	2
17	1018208	(000000-)	Taillight, 12vdc	2
18	06928	(000000-)	Screw, Pan, Phl, M4 X 0.70 X 20, 4.8	4
19	1045529	(000000-)	Hopper Wldt, Lift [M30]	1
20	1053838	(001249-)	Pin, 30mmd X 215mml	2
21	23146	(001249-)	Pin, Roll, .187d X 1.62l, .187/.192	2
22	1062566	(001249-)	Washer, flat, 1.26B 1.88D .13, Stl, Pl	2
23	34411	(001249-)	Pin, Cotter, Hair, 1.00d .178 Wir	2
24	1052885	(001420-)	Switch, Press, Adj [4- 16 In Wtr]	1

Fig. 30 - Hopper Dump Door Group

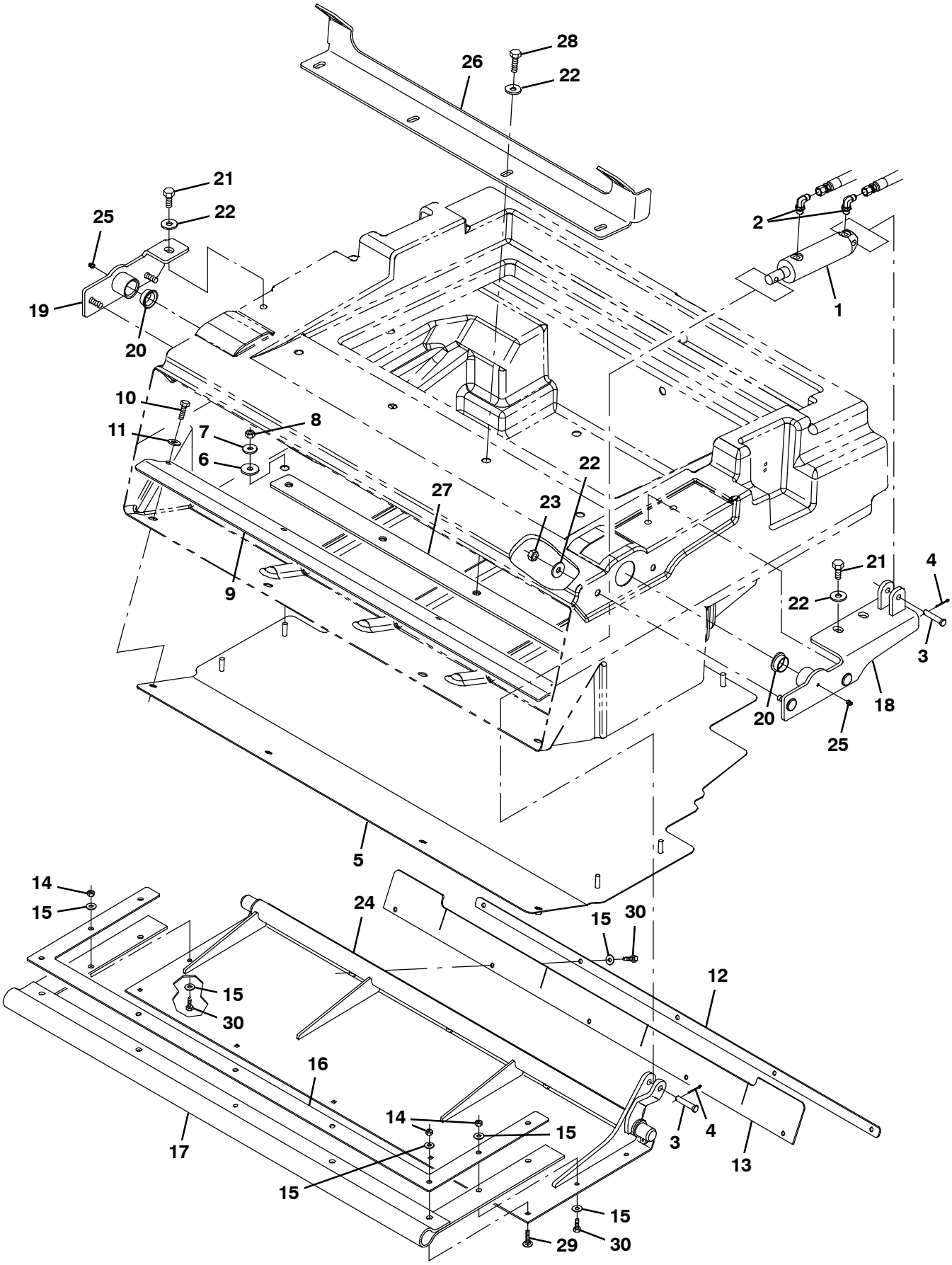

354614

Fig. 30 - Hopper Dump Door Group

Ref.	Part No.	Serial Number	Description	Qty.
1	1038115	(000000-)	Cylinder, Hyd, 1.5B 07.8L 02.75Strk 2500	1
2	77097	(000000-)	Fitting, Hyd, E90, Jm04/Om04	2
3	17461	(000000-)	Pin, Clevis, 0.37d X 1.75l	2
4	08179	(000000-)	Pin, Cotter, .094 X 1.00	2
5	1037843	(000000-)	Plate, Bottom, Hppr	1
6	222268	(000000-)	Washer, Flat, 0.38b 1.25d .12, Neo	4
7	1017218	(000000-)	Washer, Flat, 0.32b 1.00d .12, Ss	4
8	08713	(000000-)	Nut, Hex, Lock, M8 X 1.25, Nl, Ss	4
9	1034694	(000000-)	Bracket, Lip, Hppr	1
10	09010	(000000-)	Screw, Hex, M8 X 1.25 X 25, Ss	4
11	01685	(000000-)	Washer, Flat, 0.38b 0.88d .08, Ss	4
12	1034700	(000000-)	Strap, Door, Dump	1
13	1034701	(000000-)	Seal, Door, Dump	1
14	08712	(000000-)	Nut, Hex, Lock, M6 X 1.00, Nl, Ss	9
15	01684	(000000-)	Washer, Flat, 0.27b 0.69d .05, Ss	14
16	1034686	(000000-)	Plate, Retainer	1
17	1038126	(000000-)	Gasket, Door, Dump	1
18	1038123	(000000-)	Bracket Wldt, Pivot, Hppr Door, Lh	1
19	1038134	(000000-)	Bracket Wldt, Pivot, Hppr, Rh	1
20	367313	(000000-)	Bushing, Flng, 1.00b 1.13d 0.50l	2
21	09291	(000000-)	Screw, Hex, M10 X 1.50 X 20, Ss	3
22	1014563	(000000-)	Washer, Flat, 0.40b 1.12d .12, Ss	11
23	08714	(000000-)	Nut, Hex, Lock, M10 X 1.5, Nl, Ss	4
24	1038121	(000000-)	Door Wldt, Hppr [M30]	1
25	07259	(000000-)	Fitting, Grease, Str Pm04 .47l	2
26	1044993	(000000-)	Bracket, Cover, Hopper	1
27	1018253	(000000-)	Bracket, Cover	1
28	12317	(000000-)	Screw, Hex, M10 X 1.50 X 30, Ss	4
29	379791	(000000-)	Bolt, Carriage, M06 X 1.0 X 30	5
30	08716	(000000-)	Screw, Hex, M6 X 1.0 X 20, Ss	9

Fig. 31 - Brush Drive Group, Left Side

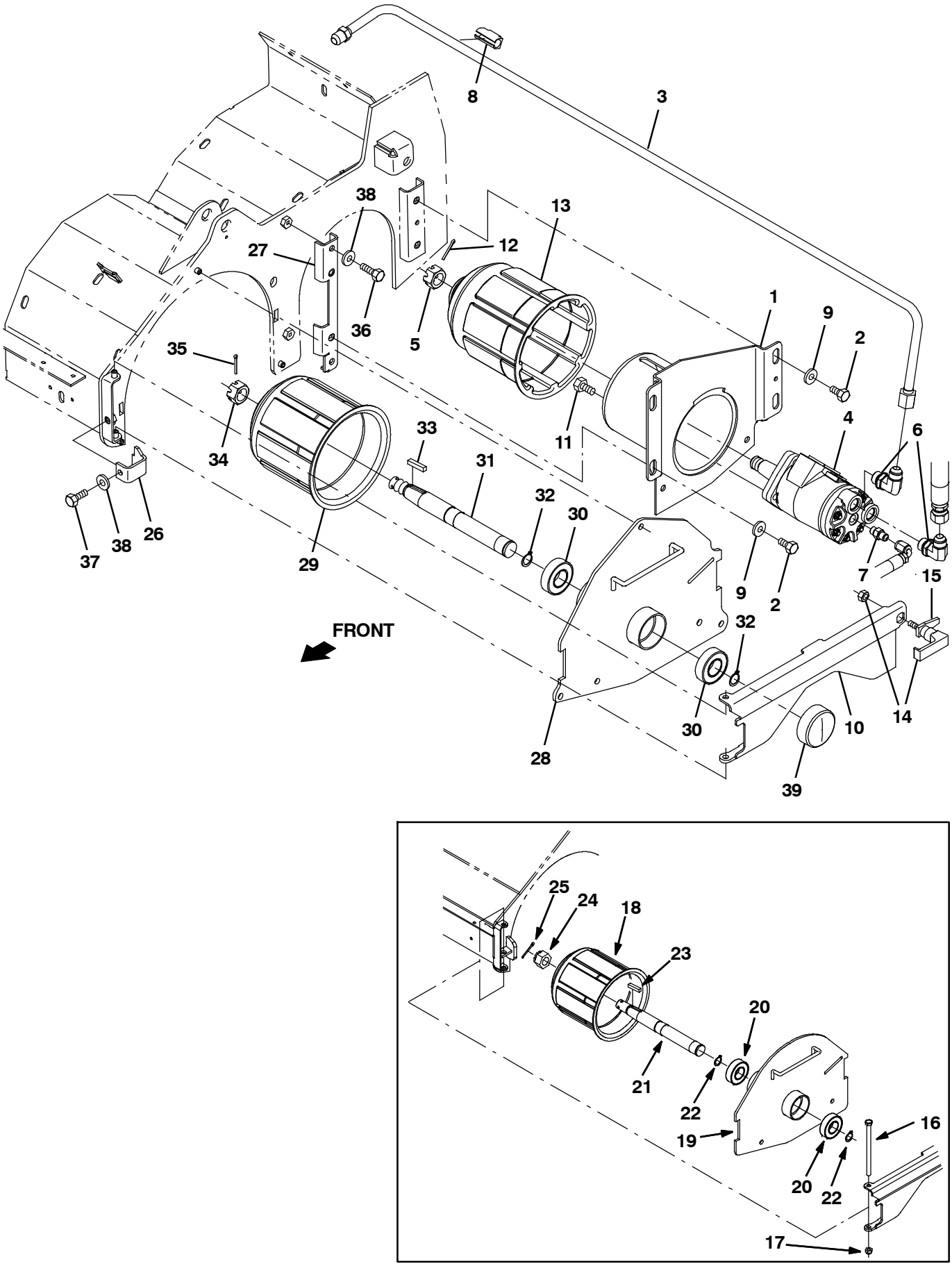

354615

Fig. 31 - Brush Drive Group, Left Side

	Ref.	Part No.	Serial Number	Description	Qty.
	1	1021019	(000000-)	Housing Wldt, Brush, Drive	1
	2	15675	(000000-)	Screw, Hex, M8 X 1.25 X 16, Ss	4
	3	1034243	(000000-)	Tube, Hyd, 08 Jf08/Jf08	1
	4	71729	(000000- 001966)	Motor, Hyd, Gear, Int 04.5 Bi- Dir 1500 (See Breakdowns)	1
▽	4	1068811	(001967-)	Motor, Hyd, Gear, Int 04.5 Bi- Dir 1500	1
▲	5	39527	(000000-)	Nut, Hex, Sltd, .75- 16	1
	6	44868	(000000-)	Fitting, Hyd, E90, Jm08/Om08	2
	7	55586	(000000-)	Fitting, Hyd, Str, Jm04/Om04	1
	8	1026080	(000000-)	Clamp, Hyd, 0.50d	1
	9	32491	(000000-)	Washer, Flat, 0.31, Std	4
	10	1029964	(000000-)	Door Wldt, Brush	1
	11	01762	(000000-)	Screw, Hex, .38- 16 X 0.75, Nl	4
	12	08175	(000000-)	Pin, Cotter, .125 X 1.25	1
	13	87631	(000000- 001966)	Plug Wldt, Drive, Brush, Sweep	1
	13	1057643	(001967-)	Plug Wldt, Drive, Brush, Sweep	1
	14	65695	(000000-)	Latch	1
	15	1026352	(000000-)	Pawl, Str	1
	16	70563	(000000- 001964)	Screw, Hex, M8 X 1.25 X 130, 8.8	1
	17	08713	(000000- 001964)	Nut, Hex, Lock, M8 X 1.25, Nl, Ss	11
▽		9006398	(000000- 001964)	Idler Assy, Brush, Replmt [M20/T20, M30]	1
▲	18	25686	(000000- 001964)	Plug Wldt, Drive, Brush	1
▲	19	1038258	(000000- 001964)	Door Wldt, Brush, Idler	1
▲	20	13534	(000000- 001964)	Bearing, Ball, 0.98b 2.05d 0.59w	2
▲	21	56078	(000000- 001964)	Shaft, Brush, Idler	1
▲	22	09005	(000000- 001964)	Ring, Retaining, Ext, 1.00d, Basic	2
▲	23	00927	(000000- 001964)	Key, Sq, 0.25 X 0.25, 1.25l	1
▲	24	12295	(000000- 001964)	Nut, Hex, Sltd, M20 X 2.5, 8	
▲	25	08175	(000000- 001964)	Pin, Cotter, .125 X 1.25	
	26	1054682	(001965-)	Bracket, Retainer, Lh	1
	27	1054575	(001965-)	Bracket, Sppt	1
▽		9012832	(001965-)	Idler Door Kit, Replmt [M20/T20/M30] (CE ONLY)	1
▲	28	1054857	(001965-)	Door Wldt, Brush, Idler	1
▲	29	25686	(001965-)	Plug Wldt, Drive, Brush	1
▲	30	13534	(001965-)	Bearing, Ball, 0.98b 2.05d 0.59w	2
▲	31	56078	(001965-)	Shaft, Brush, Idler	1
▲	32	09005	(001965-)	Ring, Retaining, Ext, 1.00d, Basic	2
▲	33	00927	(001965-)	Key, Sq, 0.25 X 0.25, 1.25l	1
▲	34	12295	(001965-)	Nut, Hex, Sltd, M20 X 2.5, 8	
▲	35	08175	(001965-)	Pin, Cotter, .125 X 1.25	
	36	09010	(001965-)	Screw, Hex, M8 X 1.25 X 25, Ss	2
	37	09740	(001965-)	Screw, Hex, M8 X 1.25 X 20, Ss	1
	38	32491	(001965-)	Washer, Flat, 0.31, Std	4
	39	1074807	(001965-)	Cap, Vinyl, 57mmid X 23mml	1

Fig. 32 - Brush Drive Group, Right Side

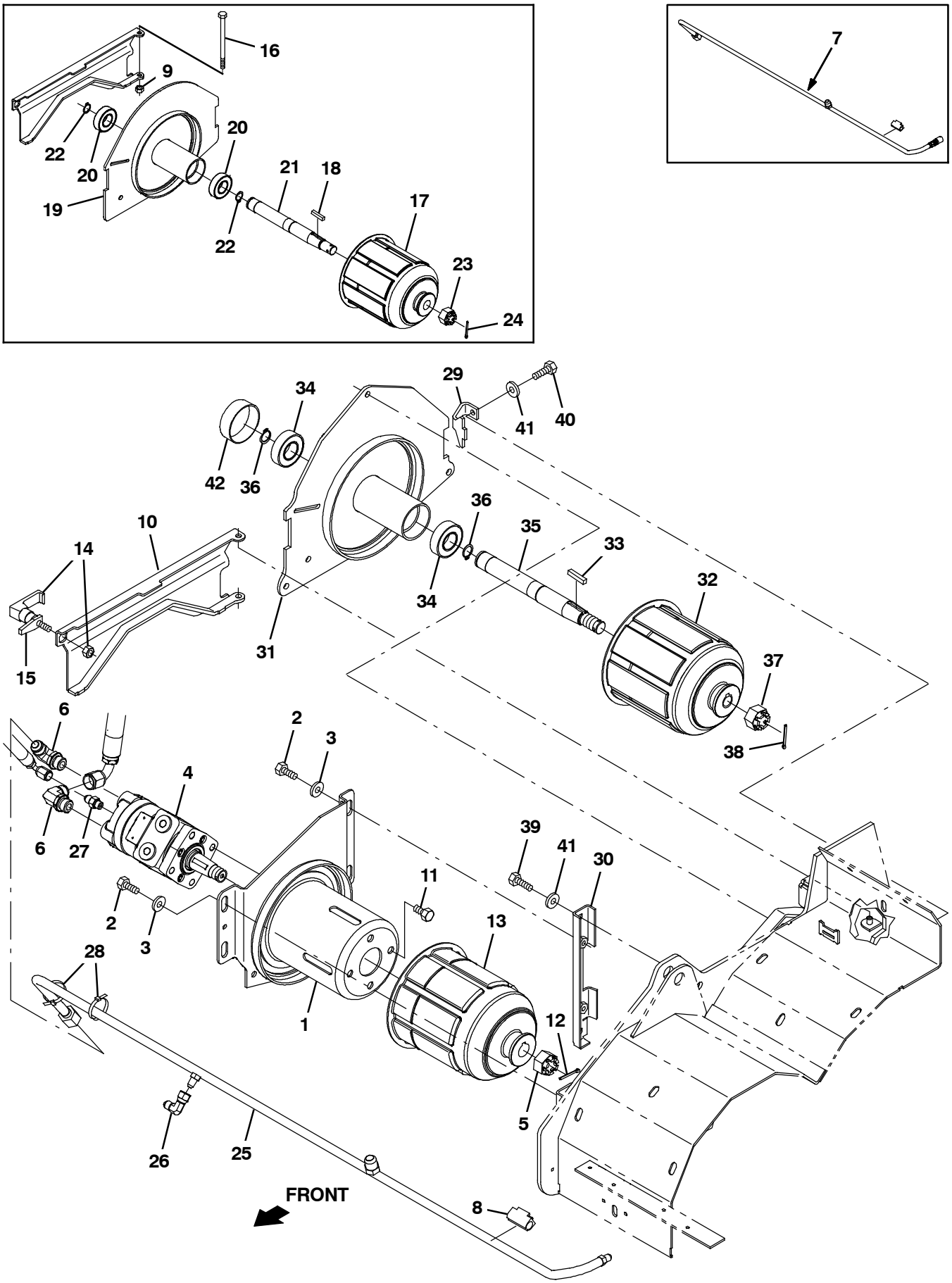

354616

Fig. 32 - Brush Drive Group, Right Side

	Ref.	Part No.	Serial Number	Description	Qty.
	1	1021019	(000000-)	Housing Wldt, Brush, Drive	1
	2	15675	(000000-)	Screw, Hex, M8 X 1.25 X 16, Ss	4
	3	32491	(000000-)	Washer, Flat, 0.31, Std	4
	4	71729	(000000- 001966)	Motor, Hyd, Gear, Int 04.5 Bi- Dir 1500 (See Breakdowns)	1
▽	4	1068811	(001967-)	Motor, Hyd, Gear, Int 04.5 Bi- Dir 1500	1
▲	5	39527	(000000-)	Nut, Hex, Sltd, .75- 16	1
	6	44868	(000000-)	Fitting, Hyd, E90, Jm08/Om08	2
	7	9006384	(000000- 001220)	Tube Kit, Hyd, Case Drain [M30]	1
	8	1026080	(000000-)	Clamp, Hyd, 0.50d	1
	9	08713	(000000-)	Nut, Hex, Lock, M8 X 1.25, Nl, Ss	1
	10	1029964	(000000-)	Door Wldt, Brush	1
	11	01762	(000000-)	Screw, Hex, .38- 16 X 0.75, Nl	4
	12	08175	(000000-)	Pin, Cotter, .125 X 1.25	1
	13	87631	(000000- 001966)	Plug Wldt, Drive, Brush, Sweep	1
	13	1057643	(001967-)	Plug Wldt, Drive, Brush, Sweep	1
	14	65695	(000000-)	Latch	1
	15	1026352	(000000-)	Pawl, Str	1
	16	70563	(000000- 001964)	Screw, Hex, M8 X 1.25 X 130, 8.8	1
▽		9006398	(000000- 001964)	Idler Assy, Brush, Replmt [M20/T20, M30]	1
▲	17	25686	(000000- 001964)	Plug Wldt, Drive, Brush	1
▲	18	00927	(000000- 001964)	Key, Sq, 0.25 X 0.25, 1.25l	1
▲	19	1038258	(000000- 001964)	Door Wldt, Brush, Idler	1
▲	20	13534	(000000- 001964)	Bearing, Ball, 0.98b 2.05d 0.59w	2
▲	21	56078	(000000- 001964)	Shaft, Brush, Idler	1
▲	22	09005	(000000- 001964)	Ring, Retaining, Ext, 1.00d, Basic	2
▲	23	12295	(000000- 001964)	Nut, Hex, Sltd, M20 X 2.5, 8	1
▲	24	08175	(000000- 001964)	Pin, Cotter, .125 X 1.25	1
	25	1055153	(001221-	Tube, Hyd, Brush Return, W/ Cd [M30]	1
	26	39210	(001221-	Fitting, Hyd, E90, Jf04/Jm04	1
	27	55586	(001221-	Fitting, Hyd, Str, Jm04/Om04	1
	28	49266	(001221-	Tie, Cable, Nyl, 07.3l .19w 1.8 Max D	2
	29	1054610	(001965-)	Bracket, Retainer, Rh	1
	30	1054575	(001965-)	Bracket, Sppt	1
▽		9012832	(001965-)	Idler Door Kit, Replmt [M20/T20/M30] (CE ONLY)	1
▲	31	1054857	(001965-)	Door Wldt, Brush, Idler	1
▲	32	25686	(001965-)	Plug Wldt, Drive, Brush	1
▲	33	00927	(001965-)	Key, Sq, 0.25 X 0.25, 1.25l	1
▲	34	13534	(001965-)	Bearing, Ball, 0.98b 2.05d 0.59w	2
▲	35	56078	(001965-)	Shaft, Brush, Idler	1
▲	36	09005	(001965-)	Ring, Retaining, Ext, 1.00d, Basic	2
▲	37	12295	(001965-)	Nut, Hex, Sltd, M20 X 2.5, 8	1
▲	38	08175	(001965-)	Pin, Cotter, .125 X 1.25	1
	39	09010	(001965-)	Screw, Hex, M8 X 1.25 X 25, Ss	2
	40	09740	(001965-)	Screw, Hex, M8 X 1.25 X 20, Ss	1
	41	32491	(001965-)	Washer, Flat, 0.31, Std	3
	42	1074807	(001965-)	Cap, Vinyl, 57mmid X 23mml	1

Fig. 33 - Brush Head Lift Group

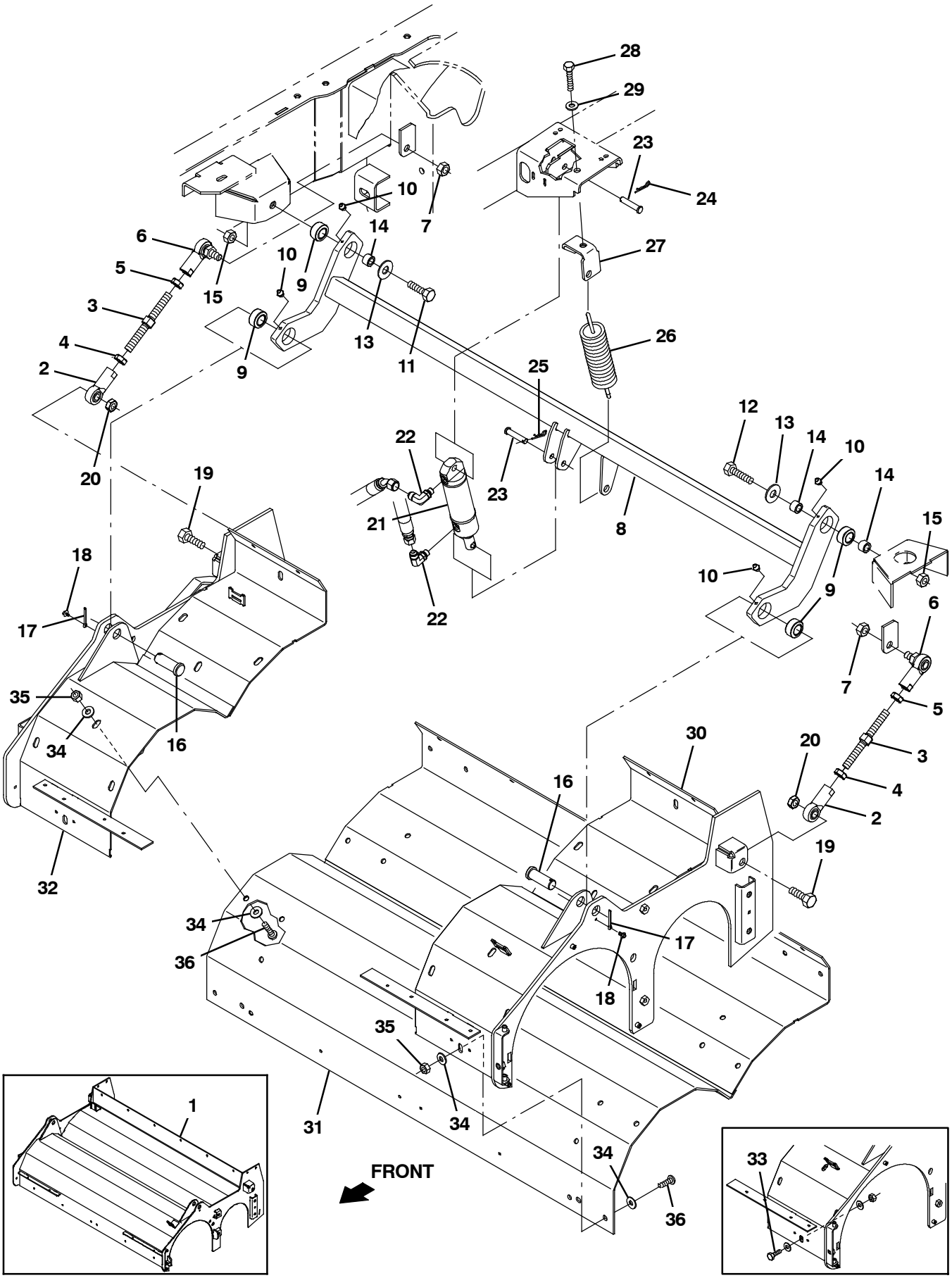

354617

Fig. 33 - Brush Head Lift Group

Ref.	Part No.	Serial Number	Description	Qty.
1	1033248	(000000- 001964)	Housing Wldt, Swp, Scb	1
2	67555	(000000-)	Rod- End, 0.50- 20rh Fem 0.50b	2
3	1014705	(000000-)	Rod, Thrd, 2 End, .50- 20 04.9l, Rh / Lh	2
4	48985	(000000-)	Nut, Hex, Jam, .50- 20	2
5	71369	(000000-)	Nut, Hex, Jam, .50- 20, Lh	2
6	382099	(000000-)	Rod- End, 0.50- 20lh Fem 0.50- 20stud	2
7	51824	(000000-)	Nut, Hex, Lock, .50- 20, Nl, Thin	2
8	1033258	(000000-)	Tube Wldt, Torque	1
9	42120	(000000-)	Bearing, Self Align, 0.75b 1.25d	4
10	07259	(000000-)	Fitting, Grease, Str Pm04 .47l	4
11	06969	(000000-)	Screw, Hex, M12 X 1.75 X 40, 8.8	1
12	06972	(000000-)	Screw, Hex, M12 X 1.75 X 60, 8.8	1
13	41619	(000000-)	Washer, Flat, 0.56b 1.38d .11, Ss	2
14	1025100	(000000-)	Sleeve, P/M, 0.47b 0.75d 0.5l [430ss]	3
15	09741	(000000-)	Nut, Hex, Lock, M12 X 1.75, Nl, Ss	2
16	04733- 12	(000000-)	Pin, Clevis, 0.75d X 2.00l	2
17	08236	(000000-)	Pin, Cotter, .156 X 1.25	2
18	223198	(000000-)	Screw, Hex, M5 X 0.80 X 10, Fmg	2
19	39811	(000000-)	Screw, Hex, .50- 13 X 1.50, G5	2
20	36644	(000000-)	Nut, Hex, Lock, .50- 13, Nl, Thin	2
21	1038137	(000000-)	Cylinder, Hyd, 1.5b 07.8l 02.80strk 2500	1
22	77098	(000000-)	Fitting, Hyd, E90, Jm06/Om04	2
23	17461	(000000-)	Pin, Clevis, 0.37d X 1.75l	2
24	86866	(000000-)	Pin, Cotter, Hair, 0.38d .072 Wir	1
25	08179	(000000-)	Pin, Cotter, .094 X 1.00	1
26	1042686	(000000-)	Spring, Extn, 2.00od 0.25wir 07.5l	1
27	1027810	(000000-)	Bracket, Mtg, Spring	1
28	763090	(000000-)	Screw, Hex, M8 X 1.25 X 60, Fl	1
29	32491	(000000-)	Washer, Flat, 0.31, Std	1
30	1052342	(001965-)	Bracket Wldt, Brush Wrap, Lh	1
31	1069562	(001965-)	Plate Wldt, Wrap, Brush	1
32	1052124	(001965-)	Bracket Wldt, Brush Wrap Mtg, Rh	1
33	09740	(001965- 004469)	Screw, Hex, M8 X 1.25 X 20, Ss	10
34	32491	(001965-)	Washer, Flat, 0.31, Std	20
35	08713	(001965-)	Nut, Hex, Lock, M8 X 1.25, Nl, Ss	10
36	223470	(004470-)	Screw, Btn, M8 X 1.25 X 25, Ss	10

Fig. 34 - Brush Head Skirt Group

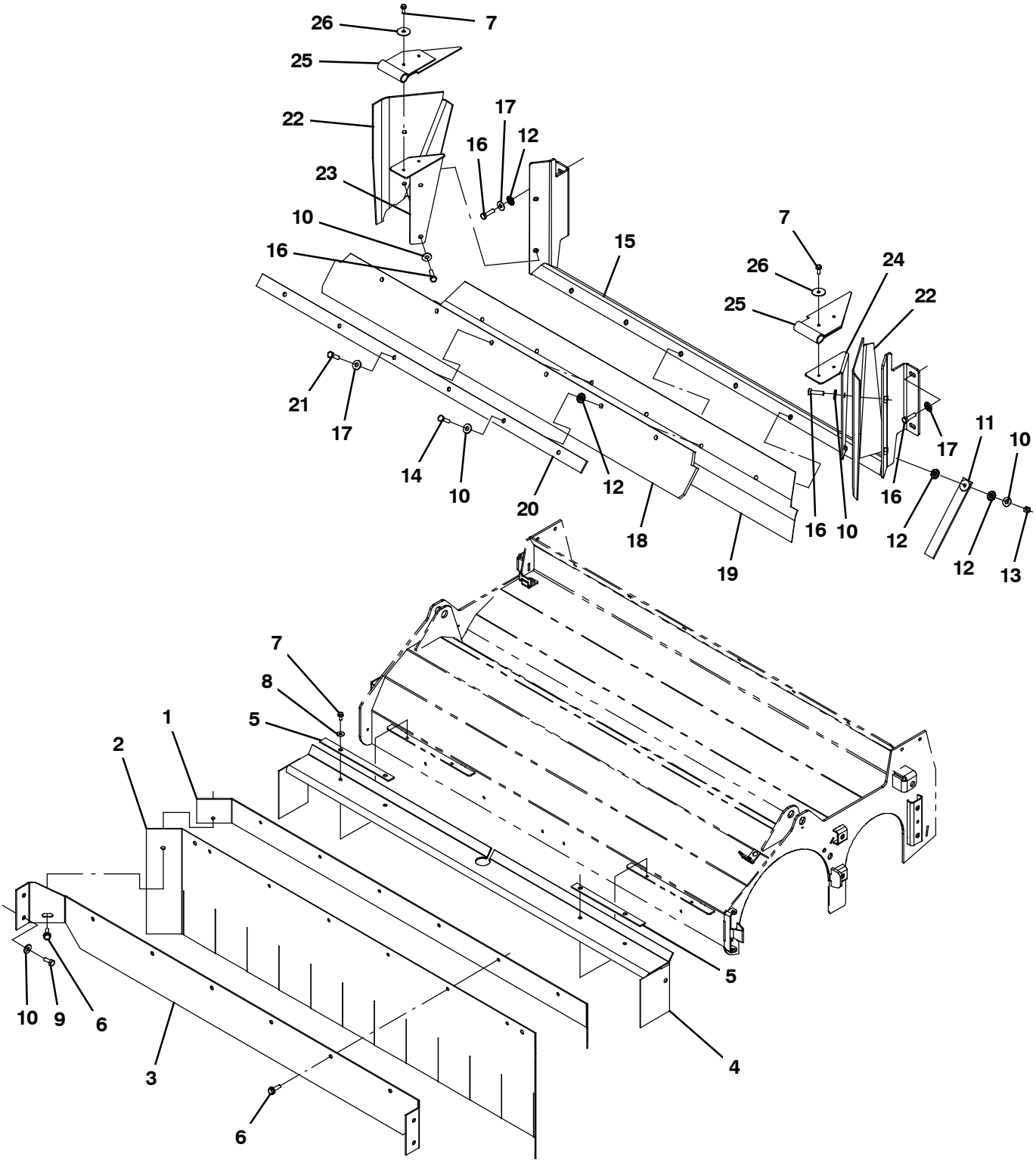

354618 - M30

Fig. 34 - Brush Head Skirt Group

Ref.	Part No.	Serial Number	Description	Qty.
1	1033267	(000000-)	Plate, Skirt, Front	1
2	1033269	(000000-)	Skirt, Neo, .06, 12.00w 53.50l, 10/ Hole	1
3	1033573	(000000-)	Retainer, Skirt, Front	1
4	1033265	(000000-)	Skirt, Neo, .06, 08.40w 58.50l, 12/ Hole	1
5	1022003	(000000-)	Retainer, Skirt, .12, 0.8w X 09.1l, Gray	2
6	76099	(000000-)	Screw, Hex, M8 X 1.25 X 25, Fmg	8
7	361339	(000000-)	Screw, Hex, M6 X 1.00 X 16, Fmg	10
8	01684	(000000-)	Washer, Flat, 0.27b 0.69d .05, Ss	6
9	09740	(000000-)	Screw, Hex, M8 X 1.25 X 20, Ss	4
10	01685	(000000-)	Washer, Flat, 0.38b 0.88d .08, Ss	10
11	71579	(000000-)	Strap, Static, W/Grommet, .19 1.1w 25.0l	1
12	41141	(000000-)	Washer, Lock, Int- Ext, 0.31	4
13	08713	(000000-)	Nut, Hex, Lock, M8 X 1.25, Nl, Ss	1
14	33401	(000000-)	Screw, Hex, M8 X 1.25 X 50, Fl, Ss	1
15	1033538	(000000-)	Bracket Wldt, Flap, Recirculation	1
16	09010	(000000-)	Screw, Hex, M8 X 1.25 X 25, Ss	8
17	32491	(000000-)	Washer, Flat, 0.31, Std	9
18	1033548	(000000-)	Skirt, Rbr, .37, 04.50w 48.00l, 06/ Hole	1
19	1033549	(000000-)	Skirt, Neo, .06, 06.38w 48.00l, 06/ Hole	1
20	1033550	(000000-)	Strip, Flap, Recirculation	1
21	09011	(000000-)	Screw, Hex, M8 X 1.25 X 30, Ss	5
22	1034328	(000000-)	Skirt, Neo, .13, 08.25w 13.98l, 02/ Hole	2
23	1039620	(000000-)	Retainer, Skirt, .12, Rh	1
24	1039622	(000000-)	Retainer, Skirt, .12, Lh	1
25	1039623	(000000-)	Skirt, Neo, .06, 03.35w 12.90l, 04/ Hole	2
26	41178	(000000-)	Washer, Flat, 0.25, Fendr	4

Fig. 35 - Squeegee Lift Group, Rear

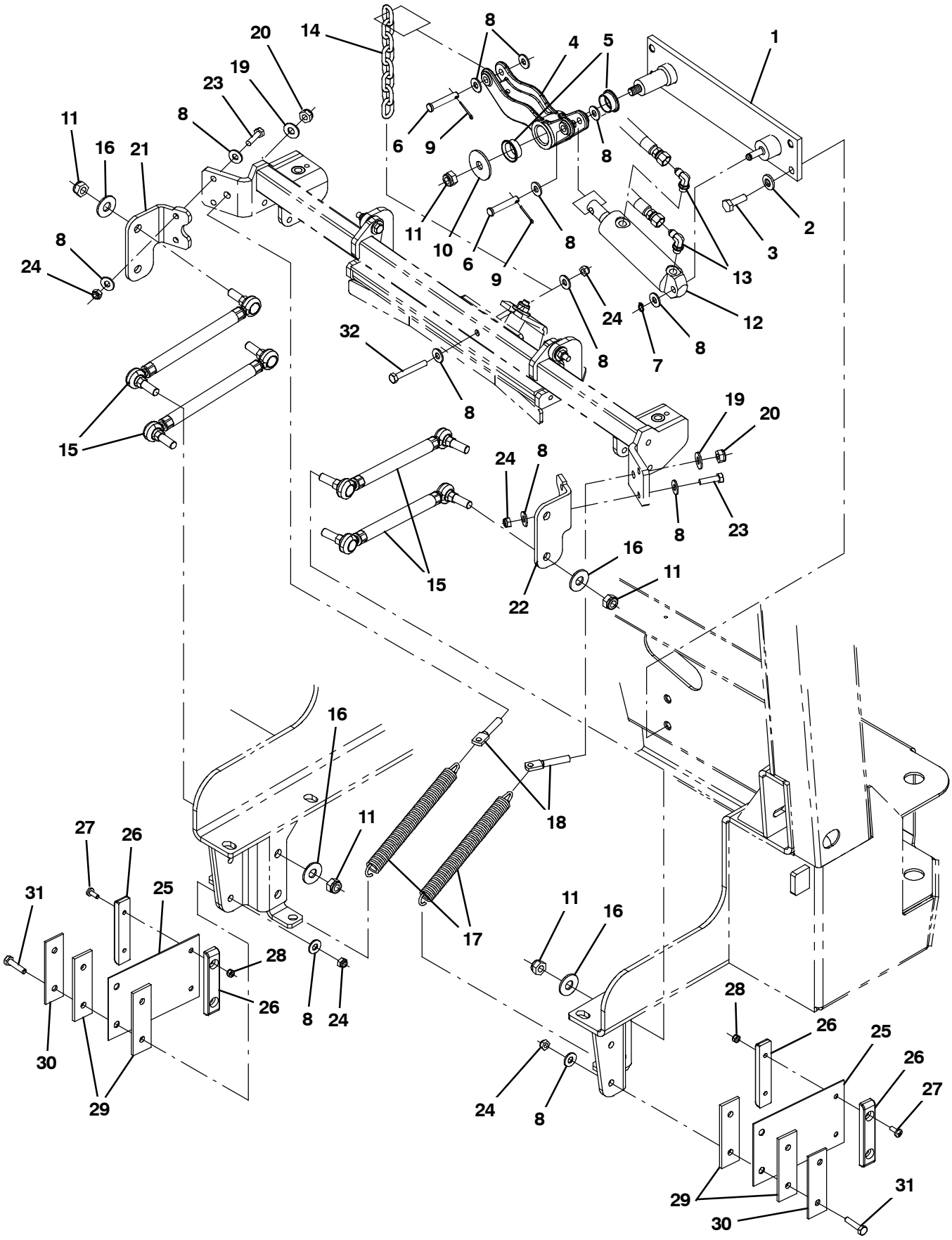

354619

Fig. 35 - Squeegee Lift Group, Rear

Ref.	Part No.	Serial Number	Description	Qty.
1	1021609	(000000-)	Plate Wldt, Lift, Sqge	1
2	41187	(000000-)	Washer, Flat, Belleville, .38	4
3	12317	(000000-)	Screw, Hex, M10 X 1.50 X 30, Ss	4
4	1025680	(000000-)	Bellcrank, Lift, Sqge	1
5	367313	(000000-)	Bushing, Flng, 1.00b 1.13d 0.50l	2
6	29584	(000000-)	Pin, Clevis, 0.37d X 2.00l	2
7	23524-1	(000000-)	Ring, Retaining, Ext, 0.38d, [Selflock]	1
8	01685	(000000-)	Washer, Flat, 0.38b 0.88d .08, Ss	19
9	08179	(000000-)	Pin, Cotter, .094 X 1.00	2
10	04414	(000000-)	Washer, Flat, 0.53b 1.88d .12, Stl, Pl	1
11	09741	(000000-)	Nut, Hex, Lock, M12 X 1.75, Nl, Ss	9
12	1038137	(000000-)	Cylinder, Hyd, 1.5b 07.8l 02.80strk 2500	1
13	77097	(000000-)	Fitting, Hyd, E90, Jm04/Om04	2
14	1023779	(000000-)	Chain, Str, 4/0, 08 Link	1
15	1026007	(000000-)	Link Assy, Rod-End, M12	4
16	41619	(000000-)	Washer, Flat, 0.56b 1.38d .11, Ss	8
17	46785-1	(000000-)	Spring, Extn, 0.88od 0.14wir 09.0l	2
18	386847	(000000-)	Bolt, Eye, M10 X 1.50 X 064mm, 07.10 Eye	2
19	01686	(000000-)	Washer, Flat, 0.44b 1.00d .08, Ss	2
20	08714	(000000-)	Nut, Hex, Lock, M10 X 1.5, Nl, Ss	2
21	1022372	(000000-)	Angle, Rh	1
22	1022442	(000000-)	Angle, Lh	1
23	09011	(000000-)	Screw, Hex, M8 X 1.25 X 30, Ss	4
24	08713	(000000-)	Nut, Hex, Lock, M8 X 1.25, Nl, Ss	8
25	71204	(000000-)	Spring, Flat, .08, 4.50w X 07.0l	2
26	1024648	(000000-)	Block, Centering	4
27	367770	(000000-)	Screw, Pan, Phl, M6 X 1.00 X 16, Ss	4
28	08712	(000000-)	Nut, Hex, Lock, M6 X 1.00, Nl, Ss	4
29	1024641	(000000-)	Spacer, Pad, Rbr	4
30	1024703	(000000-)	Retainer, Spring	2
31	09023	(000000-)	Screw, Hex, M8 X 1.25 X 35, Fl, Ss	4
32	06957	(000000-)	Screw, Hex, M8 X 1.25 X 60, 8.8	1

Fig. 36 - Squeegee Group, Rear

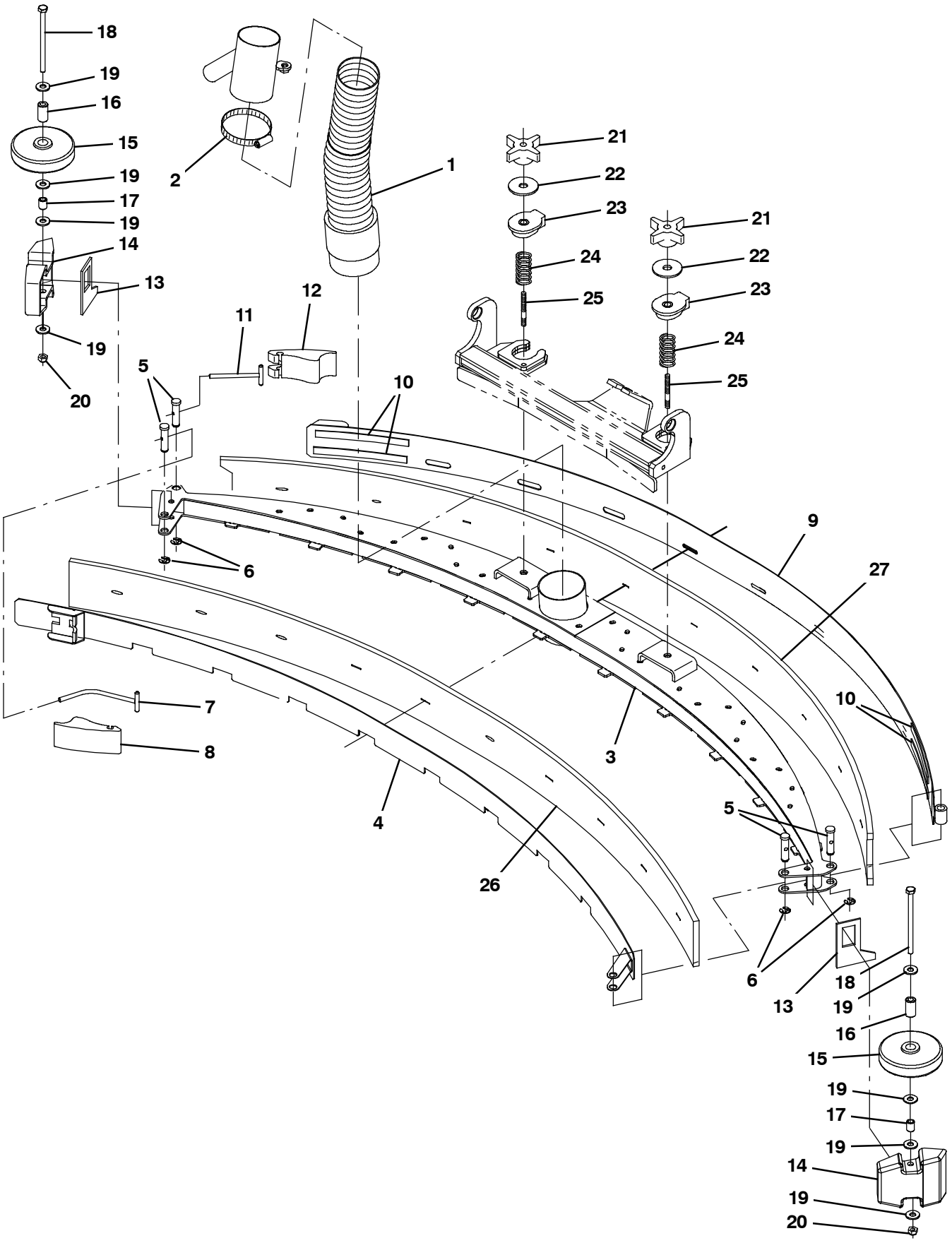

354620

Fig. 36 - Squeegee Group, Rear

	Ref.	Part No.	Serial Number	Description	Qty.
	1	1021511	(000000-)	Hose, Vacuum, 3.00id X 019.0l, 1cuff	1
	2	43555	(000000-)	Clamp, Hose, Wormdrive, 2.50- 3.50d, .50w	1
▽		9004496	(000000-	Squeegee Kit, Rear, Replmt [M30]	1
▲	3	1034862	(000000-)	Squeegee Wldt, Rear	1
▲	4	1035143	(000000-)	Clamp Wldt, Front	1
▲	5	21603	(000000-)	Pin, Grvd, 0.43d 01.8l [303ss]	4
▲	6	24555	(000000-)	Ring, Retaining, Ext, 0.38d, [E- Ring]	4
▲	7	386298	(000000-)	Pin Wldt, Front	1
▲	8	21601	(000000-)	Cam	1
▲	9	1035145	(000000-)	Clamp Wldt, Rear	1
▲	10	03495	(000000-)	Strip, Non Slip, 0.50w 06.0l	4
▲	11	21606	(000000-)	Bar Wldt, Retainer, Sqge, Rear	1
▲	12	21602	(000000-)	Cam, Rear	1
▲	13	83874	(000000-)	Gasket, Sqge	2
▲	14	386264	(000000-)	Bumper, Sqge	2
▲	15	363162	(000000-)	Wheel, 04.0d 0.89w 0.64b	2
▲	16	363301	(000000-)	Sleeve, P/M, 0.34b 0.63d 1.2l, Bnz	2
▲	17	80395	(000000-)	Sleeve, P/M, 0.31b 0.50d 0.7l [430ss]	2
▲	18	364441	(000000-)	Screw, Hex, M8 X 1.25 X 110, Ss	2
▲	19	01685	(000000-)	Washer, Flat, 0.38b 0.88d .08, Ss	8
▲	20	08713	(000000-)	Nut, Hex, Lock, M8 X 1.25, Nl, Ss	2
	21	370100	(000000-)	Knob, Star, 2.80d 4ear 1.1l .31- 18, Pyp	2
	22	04414	(000000-)	Washer, Flat, 0.53b 1.88d .12, Stl, Pl	2
	23	387433	(000000-)	Ring, Mtg, Sqge, .50l	2
	24	387500	(000000-)	Spring, Cmpr, 0.90od .04wir 02.0l	2
	25	387237	(000000-)	Stud, .31- 18 2.75l M8 X 1.25, Ss	2
	26	1035067	(000000-)	Blade, Sqge, .38 3.50W 058.0L [Linard]	1
	26	1038681	(000000-)	Blade, Sqge, .38 3.50W 058.7L, Ure (Option)	1
	27	1035052	(000000-)	Blade, Sqge, .38 4.00W 063.0L, Linatex	1
	27	1038680	(000000-)	Blade, Sqge, .38 4.00W 063.2L, Ure (Option)	1

Fig. 37 - Squeegee Linkage Group, Rear

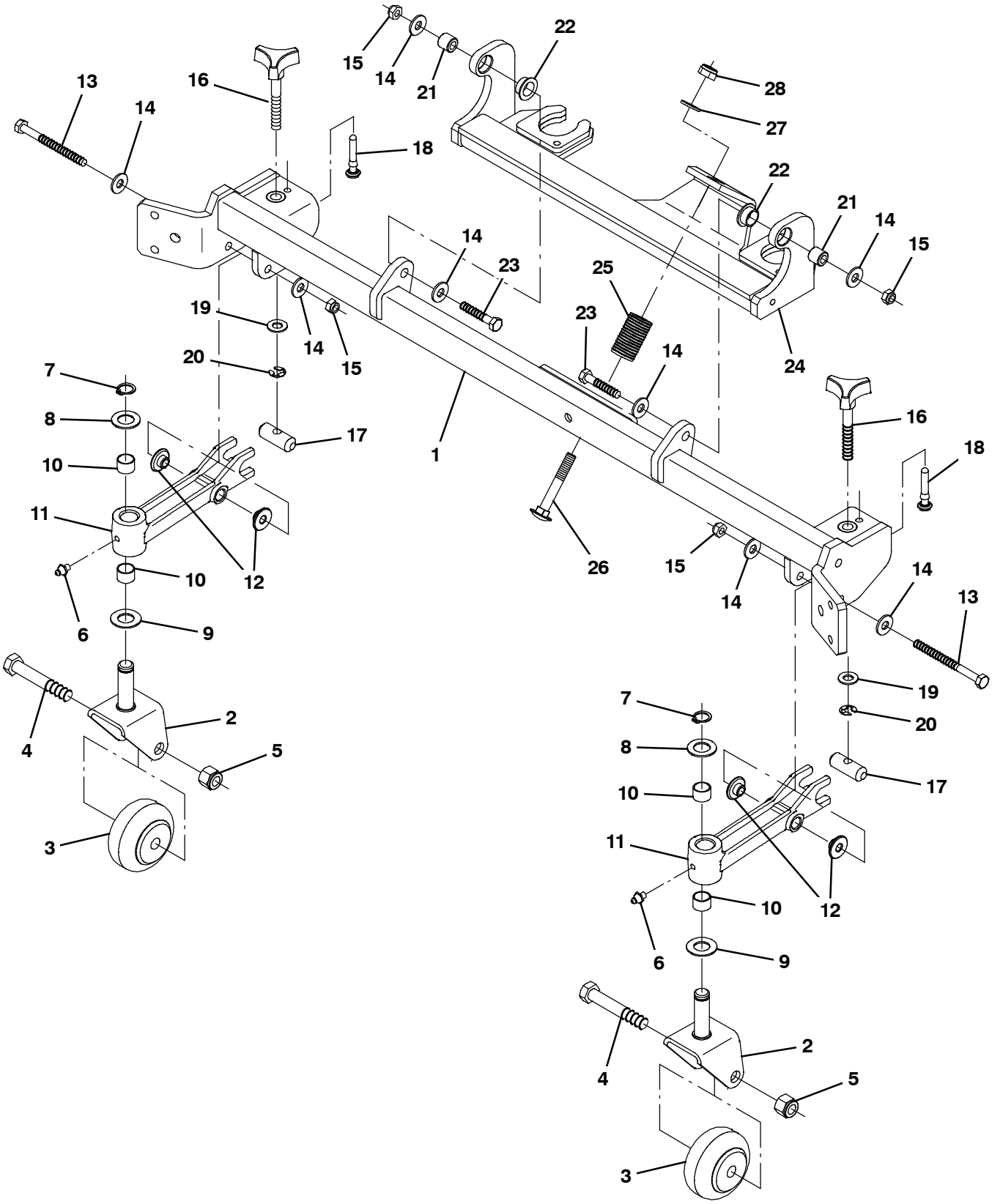

354621

Fig. 37 - Squeegee Linkage Group, Rear

Ref.	Part No.	Serial Number	Description	Qty.
1	1034812	(000000-)	Crossmember Wldt	1
2	1021404	(000000-)	Bracket Wldt, Mtg, Caster	2
3	20833	(000000-)	Wheel, 03.0d 1.38w 0.50b	2
4	81952	(000000-)	Screw, Hex, .50- 13 X 3.00, 18- 8, Ss	2
5	02931	(000000-)	Nut, Hex, Lock, .50- 13, Nl, Ss	2
6	07259	(000000-)	Fitting, Grease, Str Pm04 .47l	2
7	33373	(000000-)	Ring, Retaining, Ext, 0.62d, Hd	2
8	63468	(000000-)	Washer, Flat, 0.69b 1.19d .06, Stl, Pl	2
9	64425	(000000-)	Washer, Thrust, 0.61b 1.25d .06, Fgl	2
10	07449	(000000-)	Bushing, Sleeve, 0.62b 0.72d 0.50l, Fgl	4
11	1069385	(000000-)	Caster, Pivot	2
12	80950	(000000-)	Bushing, Flng, 0.32b 0.50d 0.24l, Bnz	4
13	39281	(000000-)	Screw, Hex, M8 X 1.25 X 90, 8.8	2
14	01685	(000000-)	Washer, Flat, 0.38b 0.88d .08, Ss	8
15	08713	(000000-)	Nut, Hex, Lock, M8 X 1.25, Nl, Ss	4
16	1021546	(000000-)	Knob Assy, Star, 1.12d 3ear M10	2
17	1021497	(000000-)	Pin, 0.63d 01.8l, 1/M10h, 2cham	2
18	1035727	(000000-)	Stop, Rotation	2
19	32485	(000000-)	Washer, Flat, 0.38, Sae	2
20	24555	(000000-)	Ring, Retaining, Ext, 0.38d, [E- Ring]	2
21	80409	(000000-)	Sleeve, P/M, 0.34b 0.63d 0.6l, Bnz	2
22	25735	(000000-)	Bushing, Flng, 0.63b 0.75d 0.38l	2
23	222505	(000000-)	Screw, Hex, M8 X 1.25 X 45, Ss	2
24	1023476	(000000-)	Bracket Wldt, Mtg, Sqge	1
25	65180	(000000-)	Spring, Dsl, 1.00od 0.50id 1.70l	1
26	1025601	(000000-)	Bolt, Carriage, M10 X 1.50 X 70	1
27	1014563	(000000-)	Washer, Flat, 0.40b 1.12d .12, Ss	1
28	08714	(000000-)	Nut, Hex, Lock, M10 X 1.5, Nl, Ss	1

Fig. 38 - Squeegee Group, Right Side

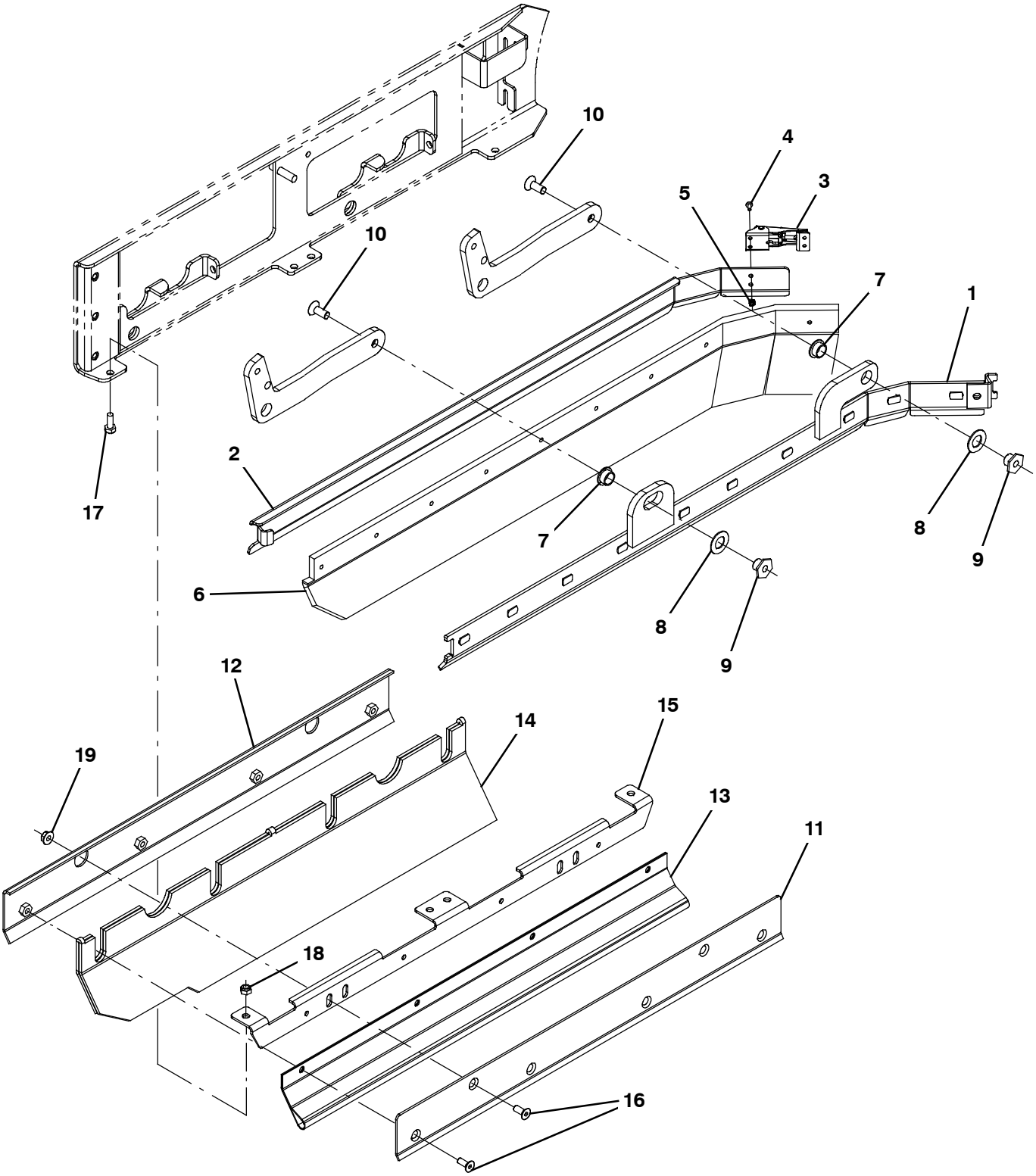

354442

Fig. 38 - Squeegee Group, Right Side

Ref.	Part No.	Serial Number	Description	Qty.
1	1029132	(000000-)	Frame Wldt, Sqge, Rh	1
2	1029128	(000000-)	Retainer, Sqge, Rh Side	1
3	384418	(000000-)	Latch, Door [Southco 91- 562- 07]	1
4	49697	(000000-)	Screw, Pan, Phl, M4 X 0.70 X 10, Ss	2
5	33932	(000000-)	Nut, Hex, Lock, M4 X 0.70, Nl, Ss	2
6	1031011	(000000-)	Blade, Sqge, .38 3.55w 038.3l, Linatex	1
6	1031823	(000000-)	Blade, Sqge, .38 3.55w 038.3l, Ure (Option)	1
7	25735	(000000-)	Bushing, Flng, 0.63b 0.75d 0.38l	2
8	64425	(000000-)	Washer, Thrust, 0.61b 1.25d .06, Fgl	2
9	1022846	(000000-)	Nut, T, M10 X 1.50 X 15.80od X 13.0l	2
10	09081	(000000-)	Screw, Flt, Soc, M10 X 1.50 X 25, 10.9	2
11	1024584	(000000-)	Bracket, Mtg, Skirt, Brush Door	1
12	1024651	(000000-)	Bracket, Mtg, Skirt, Door	1
13	1024586	(000000-)	Skirt, Neo, .06, 06.85w 27.95l, 08/ Hole	1
14	1019295	(000000-)	Skirt, Neo, .18, 10.37w 27.95l, 12/ H&S	1
15	1025151	(000000-)	Bracket, Mtg, Skirt, Brush Door	1
16	222463	(000000-)	Screw, Flt, Soc, M8 X 1.25 X 20, Al, Blk	6
17	393135	(000000-)	Screw, Btn, M8 X 1.25 X 20, Blk	4
18	08713	(000000-)	Nut, Hex, Lock, M8 X 1.25, Nl, Ss	4
19	07791	(000000-)	Nut, Hex, Flng, M8 X 1.25	2

Fig. 39 - Squeegee Lift Group, Right Side

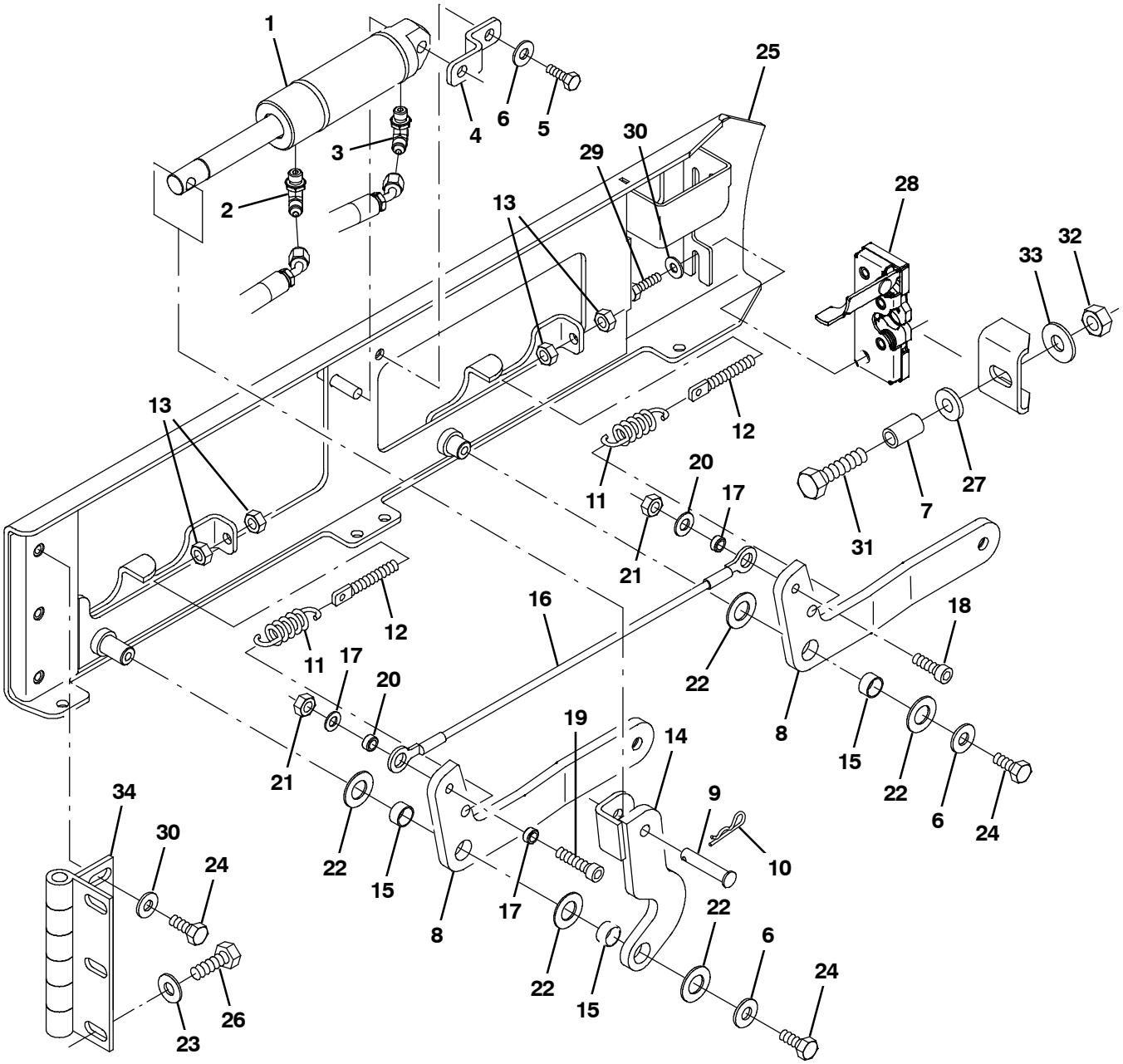

354443

Fig. 39 - Squeegee Lift Group, Right Side

Ref.	Part No.	Serial Number	Description	Qty.
1	1038137	(000000-)	Cylinder, Hyd, 1.5b 07.8l 02.80strk 2500	1
2	77097	(000000-)	Fitting, Hyd, E90, Jm04/Om04	1
3	1028635	(000000-)	Fitting, Hyd, Rst, Spcl	1
4	1022825	(000000-)	Bracket, Mtg, Cyl	1
5	08716	(000000-)	Screw, Hex, M6 X 1.00 X 20, Ss	1
6	01685	(000000-)	Washer, Flat, 0.31, Ss	3
7	1039348	(000000-)	Sleeve, 0.49b 0.68d 1.2l [304ss]	1
8	1020548	(000000-)	Arm, Sqge, Side, Rh	2
9	17461	(000000-)	Pin, Clevis, 0.37D X 1.75L	1
10	08182	(000000-)	Pin, Cotter, .125 X 1.00	1
11	87816	(000000-)	Spring, Extn, 0.75od X 0.09wir, 2.5l	2
12	386088	(000000-)	Bolt, Eye, M08 X 1.25 X 070mm, 05.50 Eye	2
13	07786	(000000-)	Nut, Hex, Std, M8 X 1.25, Ss	4
14	1023306	(000000-)	Arm Wldt, Sqge, Lift, Rh	1
15	71607	(000000-)	Bushing, Sleeve, 0.63b 0.72d 0.38l	3
16	81784	(000000-)	Cable, Glv .13d 015.8l .50eye /.50eye	1
17	360801	(000000-)	Sleeve, 0.31b 0.50d 0.3l, Ss	3
18	39308	(000000-)	Screw, Soc, M8 X 1.25 X 25, 12.9	1
19	41445	(000000-)	Screw, Soc, M8 X 1.25 X 35, 12.9	1
20	39349	(000000-)	Washer, Flat, 0.31 Sae	2
21	08709	(000000-)	Nut, Hex, Lock, M8 X 1.25, Nl	2
22	64425	(000000-)	Washer, Thrust, 0.61b 1.25d .06, Fgl	5
23	41187	(000000-)	Washer, Flat, Belleville, .38	3
24	09740	(000000-)	Screw, Hex, M8 X 1.25 X 20, Ss	5
25	1019031	(000000-)	Door Wldt, Brush, Rh	1
26	09028	(000000-)	Screw, Hex, M10 X 1.5 X 25, Ss	3
27	36328	(000000-)	Washer, Flat, Belleville, .50	1
28	59194	(000000-)	Latch, Hook	1
29	09007	(000000-)	Screw, Hex, M6 X 1.0 X 25, Ss	2
30	41185	(000000-)	Washer, Flat, Belleville, .25	5
31	379870	(000000-)	Screw, Hex, M12 X 1.75 X 55, Ss	1
32	07788	(000000-)	Nut, Hex, Std, M12 X 1.75, Ss	1
33	41619	(000000-)	Washer, Flat, 0.56b 1.38d .11, Ss	1
34	1024576	(000000-)	Hinge, .50pin .19 4.0w 06.0l 3/0.44sl	1

Fig. 40 - Squeegee Group, Left Side

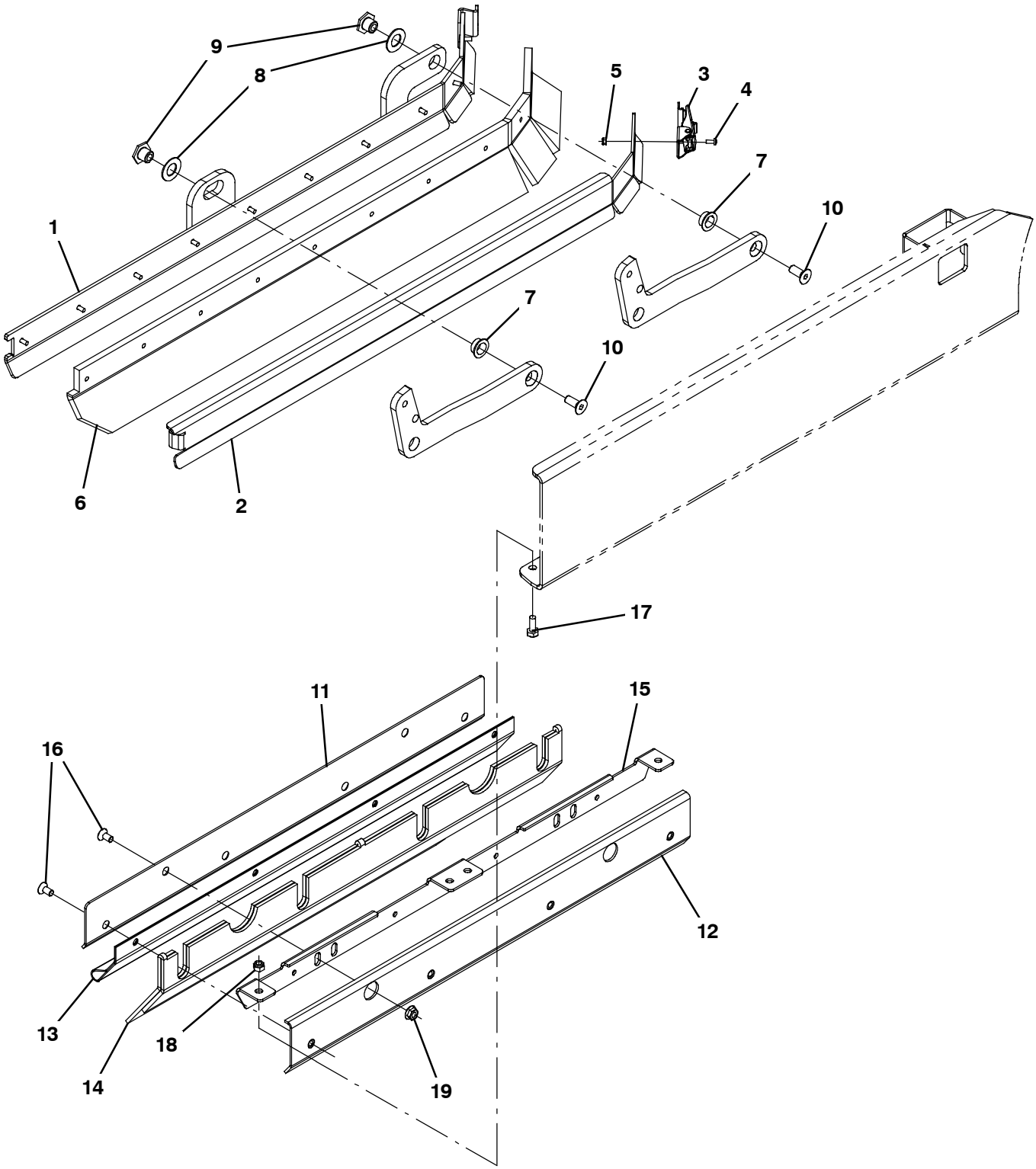

354444

Fig. 40 - Squeegee Group, Left Side

Ref.	Part No.	Serial Number	Description	Qty.
1	1028972	(000000-)	Frame Wldt, Sqge, Lh	1
2	1028979	(000000-)	Retainer, Sqge, Lh Side	1
3	384418	(000000-)	Latch, Door [Southco 91- 562- 07]	1
4	49697	(000000-)	Screw, Pan, Phl, M4 X 0.70 X 10, Ss	2
5	33932	(000000-)	Nut, Hex, Lock, M4 X 0.70, Nl, Ss	2
6	1031011	(000000-)	Blade, Sqge, .38 3.55w 038.3l, Linatex	1
6	1031823	(000000-)	Blade, Sqge, .38 3.55w 038.3l, Ure (Option)	1
7	25735	(000000-)	Bushing, Flng, 0.63b 0.75d 0.38l	2
8	64425	(000000-)	Washer, Thrust, 0.61b 1.25d .06, Fgl	2
9	1022846	(000000-)	Nut, T, M10 X 1.50 X 15.80od X 13.0l	2
10	09081	(000000-)	Screw, Flt, Soc, M10 X 1.50 X 25, 10.9	2
11	1024584	(000000-)	Bracket, Mtg, Skirt, Brush Door	1
12	1024651	(000000-)	Bracket, Mtg, Skirt, Door	1
13	1024586	(000000-)	Skirt, Neo, .06, 06.85w 27.95l, 08/ Hole	1
14	1019295	(000000-)	Skirt, Neo, .18, 10.37w 27.95l, 12/ H&S	1
15	1025151	(000000-)	Bracket, Mtg, Skirt, Brush Door	1
16	222463	(000000-)	Screw, Flt, Soc, M8 X 1.25 X 20, Al, Blk	6
17	393135	(000000-)	Screw, Btn, M8 X 1.25 X 20, Blk	4
18	08713	(000000-)	Nut, Hex, Lock, M8 X 1.25, Nl, Ss	4
19	07791	(000000-)	Nut, Hex, Flng, M8 X 1.25	2

Fig. 41 - Squeegee Lift Group, Left Side

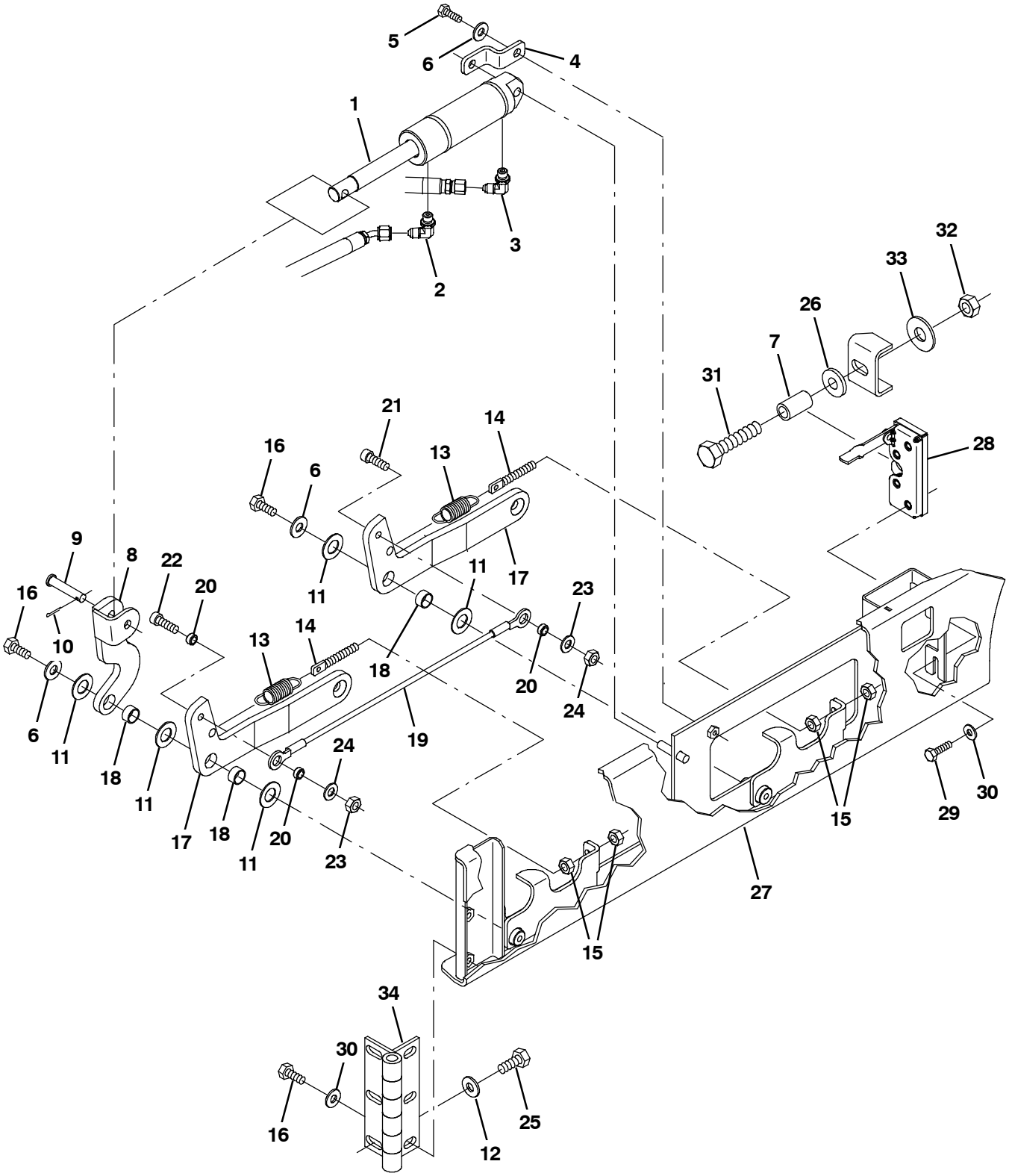

354445

Fig. 41 - Squeegee Lift Group, Left Side

Ref.	Part No.	Serial Number	Description	Qty.
1	1038137	(000000-)	Cylinder, Hyd, 1.5b 07.8l 02.80strk 2500	1
2	77097	(000000-)	Fitting, Hyd, E90, Jm04/Om04	1
3	1028635	(000000-)	Fitting, Hyd, Rst, Spcl	1
4	1022825	(000000-)	Bracket, Mtg, Cyl	1
5	08716	(000000-)	Screw, Hex, M6 X 1.00 X 20, Ss	1
6	01685	(000000-)	Washer, Flat, 0.31, Ss	3
7	1039348	(000000-)	Sleeve, 0.49b 0.68d 1.2l [304ss]	1
8	1022978	(000000-)	Arm Wldt, Lift, Sqge, Lh	1
9	17461	(000000-)	Pin, Clevis, 0.37D X 1.75L	1
10	08182	(000000-)	Pin, Cotter, .125 X 1.00	1
11	64425	(000000-)	Washer, Thrust, 0.61b 1.25d .06, Fgl	5
12	41187	(000000-)	Washer, Flat, Belleville, .38	3
13	87816	(000000-)	Spring, Extn, 0.75od X 0.09wir, 2.5l	2
14	386088	(000000-)	Bolt, Eye, M08 X 1.25 X 070mm, 05.50 Eye	2
15	07786	(000000-)	Nut, Hex, Std, M8 X 1.25, Ss	4
16	09740	(000000-)	Screw, Hex, M8 X 1.25 X 20, Ss	5
17	1023307	(000000-)	Arm, Sqge, Side, Lh	2
18	71607	(000000-)	Bushing, Sleeve, 0.63b 0.72d 0.38l	3
19	81784	(000000-)	Cable, Glv .13d 015.8l .50eye /.50eye	1
20	360801	(000000-)	Sleeve, 0.31b 0.50d 0.3l, Ss	3
21	39308	(000000-)	Screw, Soc, M8 X 1.25 X 25, 12.9	1
22	41445	(000000-)	Screw, Soc, M8 X 1.25 X 35, 12.9	1
23	39349	(000000-)	Washer, Flat, 0.31 Sae	2
24	08709	(000000-)	Nut, Hex, Lock, M8 X 1.25, Nl	2
25	09028	(000000-)	Screw, Hex, M10 X 1.5 X 25, Ss	3
26	36328	(000000-)	Washer, Flat, Belleville, .50	1
27	1023314	(000000-)	Door Wldt, Brush, Lh	1
28	59195	(000000-)	Latch, Hook	1
29	09007	(000000-)	Screw, Hex, M6 X 1.0 X 25, Ss	2
30	41185	(000000-)	Washer, Flat, Belleville, .25	5
31	379870	(000000-)	Screw, Hex, M12 X 1.75 X 55, Ss	1
32	07788	(000000-)	Nut, Hex, Std, M12 X 1.75, Ss	1
33	41619	(000000-)	Washer, Flat, 0.56b 1.38d .11, Ss	1
34	1024576	(000000-)	Hinge, .50pin .19 4.0w 06.0l 3/0.44sl	1

Fig. 42 - Solution Tank Group

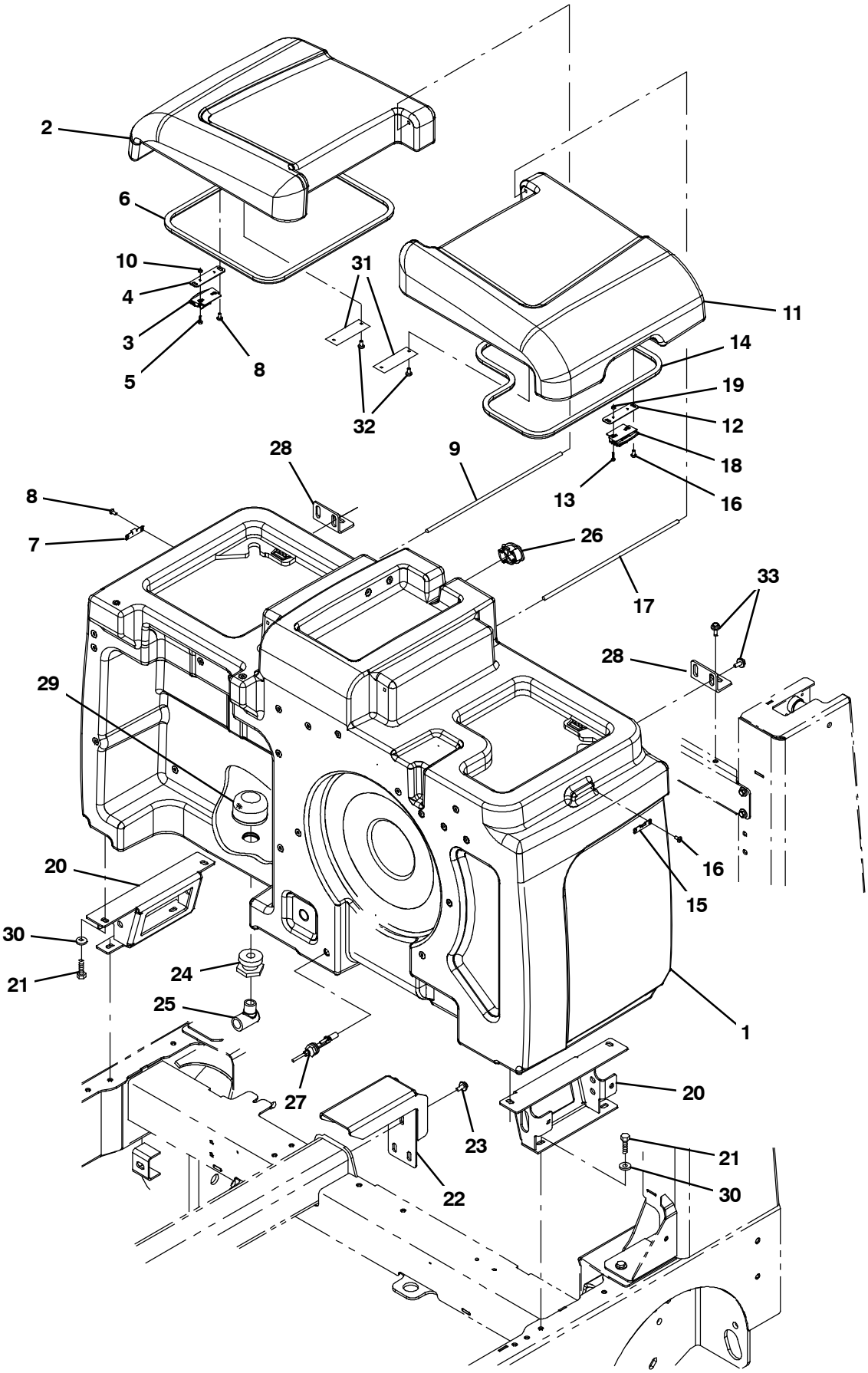

354622

Fig. 42 - Solution Tank Group

	Ref.	Part No.	Serial Number	Description	Qty.
	1	1033927	(000000-)	Tank, Soltn [M30]	1
▽	2	9003992	(000000-)	Cover Kit, Tank, Soltn, Rh, Replmt	1
▲	3	1030617	(000000-)	Latch, Cover	1
▲	4	1039757	(000000-)	Plate, Mtg, Latch	1
▲	5	19320	(002798-)	Screw, Pan, Phl, 06- 32 X 0.38, G1	2
▲	6	1040465	(000000-)	Seal, Bulb, Str, .50hi .50w 058.0l, Adh	1
▲	7	1029748	(000000-)	Bracket, Keeper, Latch	1
▲	8	382320	(000000-)	Screw, Pan, Phl, 12- 16 X 0.50, F/ Plstc	4
▲	9	1037495	(000000-)	Bar, Rnd, Plstc, 0.31d 17.0l	1
▲	10	19309	(000000-)	Nut, Hex, Std, 06- 32	2
▽	2	9003995	(000000-)	Cover Kit, Tank, Soltn, Rh, Replmt, (Ce & JP)	1
▲	3	1030617	(000000-)	Latch, Cover	1
▲	4	1039757	(000000-)	Plate, Mtg, Latch	1
▲	5	19320	(002798-)	Screw, Pan, Phl, 06- 32 X 0.38, G1	2
▲	6	1040465	(000000-)	Seal, Bulb, Str, .50hi .50w 058.0l, Adh	1
▲	7	1029748	(000000-)	Bracket, Keeper, Latch	1
▲	8	382320	(000000-)	Screw, Pan, Phl, 12- 16 X 0.50, F/ Plstc	4
▲	9	1037495	(000000-)	Bar, Rnd, Plstc, 0.31d 17.0l	1
▲	10	19309	(000000-)	Nut, Hex, Std, 06- 32	2
▽	11	9003994	(000000-)	Cover Kit, Tank, Soltn, Lh, Replmt	1
▲	12	1039757	(000000-)	Plate, Mtg, Latch	1
▲	13	19320	(002798-)	Screw, Pan, Phl, 06- 32 X 0.38, G1	2
▲	14	1040465	(000000-)	Seal, Bulb, Str, .50hi .50w 058.0l, Adh	1
▲	15	1029748	(000000-)	Bracket, Keeper, Latch	1
▲	16	382320	(000000-)	Screw, Pan, Phl, 12- 16 X 0.50, F/ Plstc	4
▲	17	1037495	(000000-)	Bar, Rnd, Plstc, 0.31d 17.0l	1
▲	18	1030617	(000000-)	Latch, Cover	1
▲	19	19309	(000000-)	Nut, Hex, Std, 06- 32	2
▽	10	9003996	(000000-)	Cover Kit, Tank, Soltn, Lh, Replmt, (Ce & JP)	1
▲	11	1030617	(000000-)	Latch, Cover	1
▲	12	1039757	(000000-)	Plate, Mtg, Latch	1
▲	13	19320	(002798-)	Screw, Pan, Phl, 06- 32 X 0.38, G1	2
▲	14	1040465	(000000-)	Seal, Bulb, Str, .50hi .50w 058.0l, Adh	1
▲	15	1029748	(000000-)	Bracket, Keeper, Latch	1
▲	16	382320	(000000-)	Screw, Pan, Phl, 12- 16 X 0.50, F/ Plstc	4
▲	17	1037495	(000000-)	Bar, Rnd, Plstc, 0.31d 17.0l	1
▲	18	1030617	(000000-)	Latch, Cover	1
▲	19	19309	(000000-)	Nut, Hex, Std, 06- 32	2
	20	1041477	(000000-)	Bracket, Mtg, Tank, Soltn	2
	21	09740	(000000-)	Screw, Hex, M8 X 1.25 X 20, Ss	8
	22	1034255	(000000-)	Bracket, Sppt, Tank, Cntr	1
	23	1037346	(000000-)	Screw, Hex, M8 X 1.25 X 25, 9.8, Sems	3
	24	377349	(000000-)	Fitting, Plstc, Pf12/Pf12, Bh	1
	25	69785	(000000-)	Fitting, Plstc, E90, Pf12/Pm12	1
	26	390994	(000000-)	Plug, Hole, Soltn Tank, Blk Pyu	1
	27	385685	(000000-)	Sensor, Level, Liq, 14vdc 01a .62- 11	1
	28	1020209	(000000-)	Angle, Sppt, Tank, Rear	2
	29	1027290	(000000-)	Filter, Soltn, 20mesh, Pm12 3.1d 02.6l	1

Continued

Fig. 42 - Solution Tank Group

Ref.	Part No.	Serial Number	Description	Qty.
30	1017218	(000000-)	Washer, Flat, 0.32B 1.00D .12, Ss	8
31	1017101	(000000-)	Plate, Label, Soltn Tank (ec- H20 only)	2
32	360973	(000000-)	Screw, Pan, 12- 16 X 0.50, F/ Plstc (ec- H20 only)	4
33	1020341	(000000-)	Screw, Hex, M8 X 1.25 X 20, Ss, Sems	4

Fig. 43 - Solution Tank Drain Group

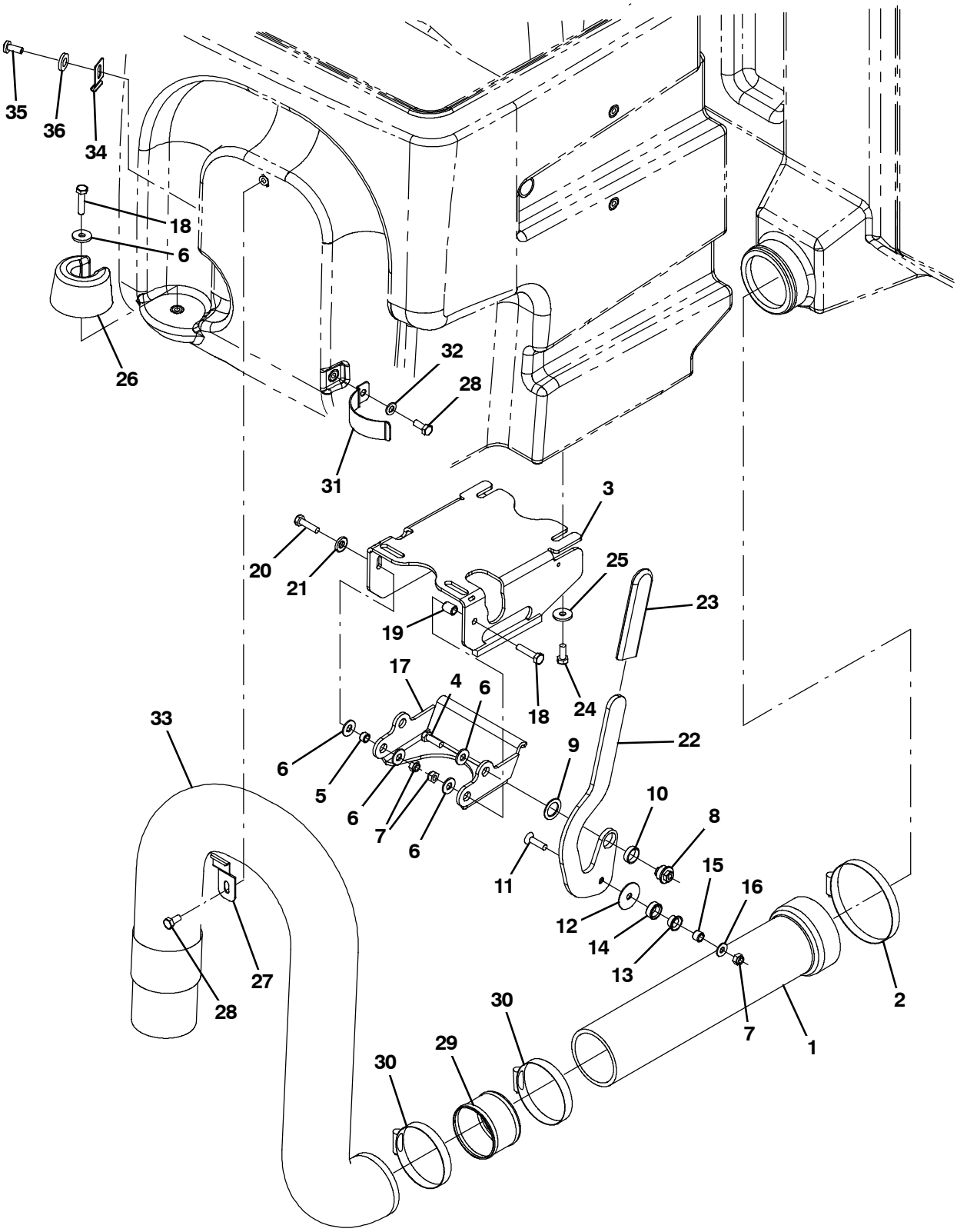

354623

Fig. 43 - Solution Tank Drain Group

Ref.	Part No.	Serial Number	Description	Qty.
1	9003793	(000000-)	Tube Kit, Tank, Soltn, Replmt	1
2	23498	(000000-)	Clamp, Hose, Wormdrive, 3.56- 4.50d, .50w	1
3	1042003	(000000-)	Mount Wldt, Valve, Pinch, Rh	1
4	39277	(000000-)	Screw, Hex, M8 X 1.25 X 25, 8.8	1
5	222516	(000000-)	Sleeve, P/M, 0.31b 0.50d 0.3l [430ss]	1
6	32491	(000000-)	Washer, Flat, 0.31, Std	5
7	08713	(000000-)	Nut, Hex, Lock, M8 X 1.25, Nl, Ss	3
8	1024599	(000000-)	Bushing, Eccentric, Adj	1
9	1026051	(000000-)	Washer, Flat, 0.79b 1.18d .06, Nyl	1
10	74090	(000000-)	Bushing, Sleeve, 0.75b 0.88d 0.25l	1
11	79506	(000000-)	Screw, Flt, Soc, M8 X 1.25 X 30, Ss	1
12	1028701	(000000-)	Washer, Thrust, 0.34b 1.50d .06	1
13	15648	(000000-)	Bushing, Flng, 0.50b 0.59d 0.38l	1
14	1028691	(000000-)	Roller, Brg	1
15	1028690	(000000-)	Tube, 0.32id 0.50od 00.4l, Ss	1
16	1017218	(000000-)	Washer, Flat, 0.32b 1.00d .12, Ss	1
17	1024535	(000000-)	Arm, Pinch	1
18	06955	(000000-)	Screw, Hex, M8 X 1.25 X 35, 8.8	2
19	80395	(000000-)	Sleeve, P/M, 0.31b 0.50d 0.7l [430ss]	1
20	76570	(000000-)	Screw, Hex, M8 X 1.25 X 30, 8.8	1
21	41186	(000000-)	Washer, Flat, Belleville, .31	1
22	1026727	(000000-)	Handle, Valve, Pinch, Rh	1
23	1023502	(000000-)	Grip, Handle	1
24	09740	(000000-)	Screw, Hex, M8 X 1.25 X 20, Ss	4
25	1017218	(000000-)	Washer, Flat, 0.32b 1.00d .12, Ss	4
26	1022137	(000000-)	Plug, Hose, Pyu	1
27	1025480	(000000-)	Bracket, Retaining, Hose	1
28	15675	(000000-)	Screw, Hex, M8 X 1.25 X 16, Ss	2
29	1041953	(000000-)	Tube, 2.90Id 3.00OD 02.4L, Ss	2
30	43555	(000000-)	Clamp, Hose, Wormdrive, 2.50- 3.50d, .50w	2
31	1024558	(000000-)	Strap, Retaining, Hose	1
32	39349	(000000-)	Washer, Flat, 0.31, Sae	1
33	1019424	(000000-)	Hose, Drain, 3.00id X 48.0l	1
34	1043214	(000000-)	Bracket, Retain, Hose	1
35	17284	(000000-)	Screw, Btn, M8 X 1.25 X 16, Ss	1
36	01685	(000000-)	Washer, Flat, 0.38B 0.88D .08, Ss	1

Fig. 44 - Solution Control Group

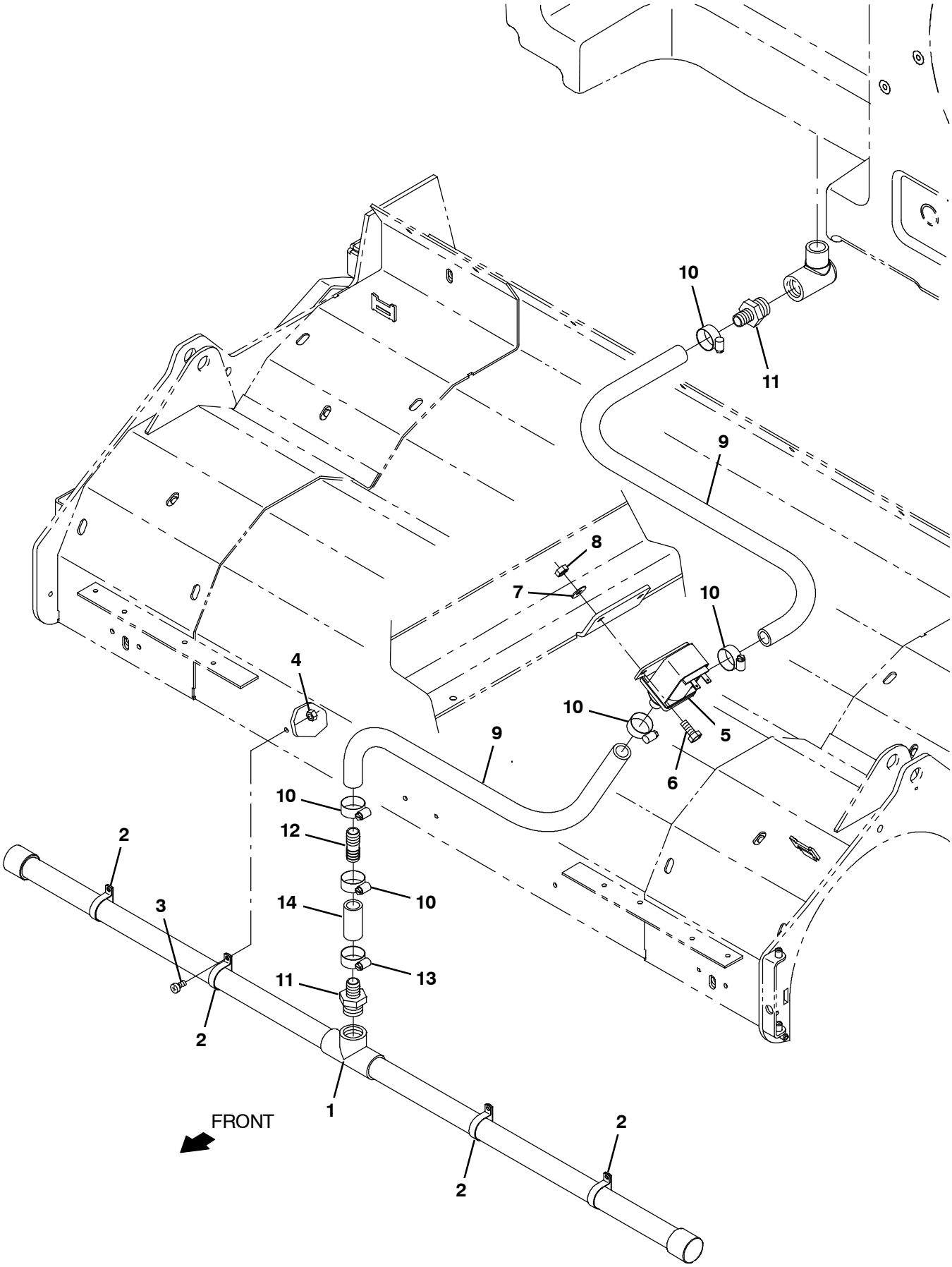

354624

Fig. 44 - Solution Control Group

Ref.	Part No.	Serial Number	Description	Qty.
1	1038116	(000000-)	Tube, Distribution, Water, 45.0l	1
2	50544	(000000-)	Clamp, Cable, Ss, 1.12d X 0.38w, 1hole	4
3	09200	(000000-)	Screw, Pan, Phl, M5 X 0.80 X 12, Ss	4
4	09739	(000000-)	Nut, Hex, Lock, M5 X 0.80, Nl, Ss	4
5	1067700	(000000-)	Valve Assy, Water, Solenoid , 12vdc	1
6	08716	(000000-)	Screw, Hex, M6 X 1.00 X 20, Ss	2
7	01684	(000000-)	Washer, Flat, 0.27b 0.69d .05, Ss	2
8	08712	(000000-)	Nut, Hex, Lock, M6 X 1.00, Nl, Ss	2
9	1015045	(000000- 004690)	Hose, Afmkt, Pvc, Brd, 0.75id, 08ft, Clr	1
9	1015032	(004691-)	Hose, Afmkt, Pvc, Brd, 0.62id, 08ft, Clr	1
10	63810	(000000-)	Clamp, Hose, Wormdrive, 0.56- 1.06d, .56w	5
11	79273- 2	(000000- 004690)	Fitting, Plstc, Str, Bm12/Pm12	2
11	365095	(004691-)	Fitting, Plstc, Str, Bm10/Pm12	2
12	365164	(004691-)	Fitting, Plstc, Str, Bm10/Bm10	1
13	63810	(004691-)	Clamp, Hose, Wormdrive, 0.56- 1.06d, .56w	1
14	1015033	(004691-)	Hose, Afmkt, Pvc, Brd, 0.62id, 01ft, Clr	1

Fig. 45 - Recovery Tank Group

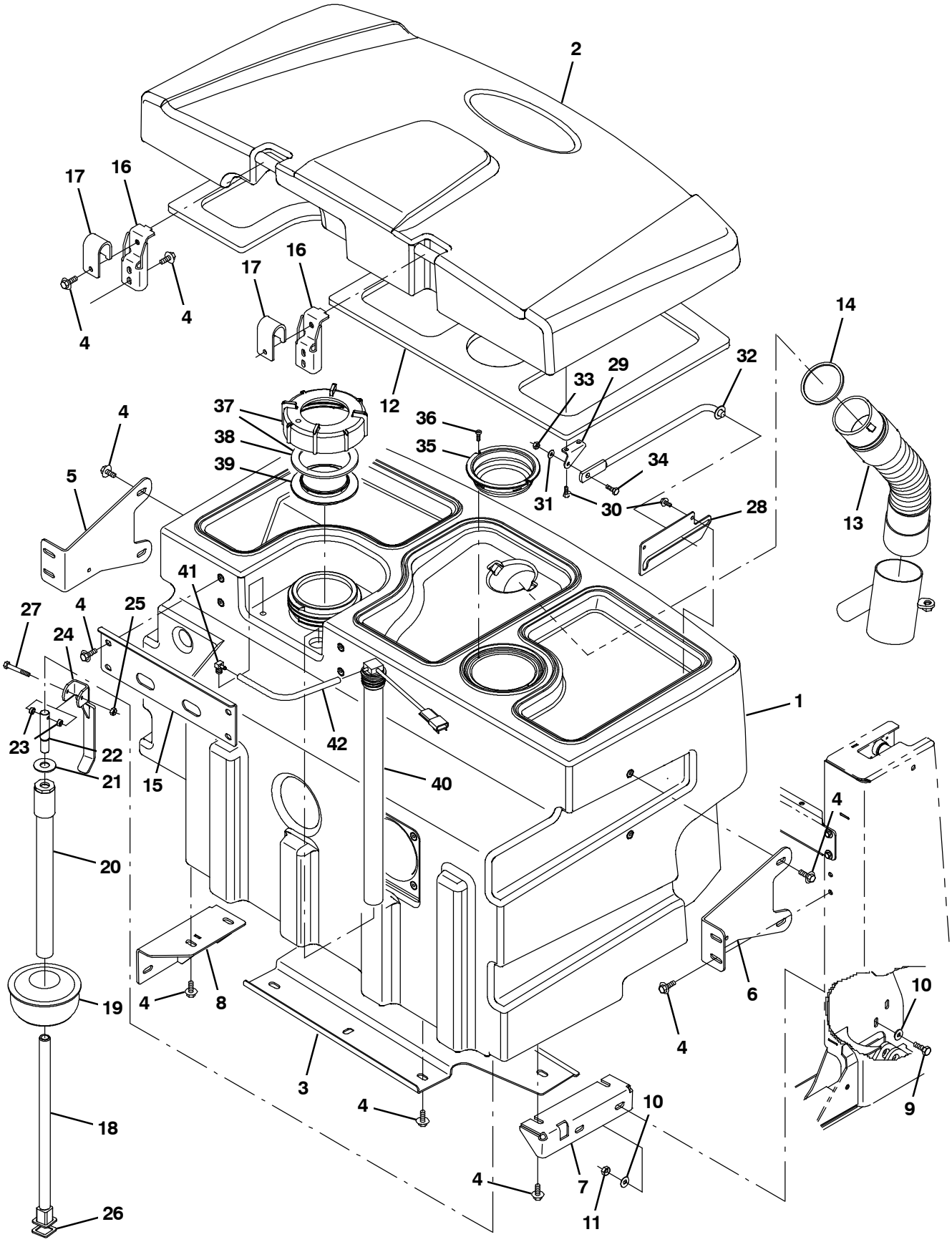

354625

Fig. 45 - Recovery Tank Group

	Ref.	Part No.	Serial Number	Description	Qty.
	1	1033928	(000000-)	Tank, Recvy	1
	2	1034869	(000000-)	Cover, Tank, Recvy	1
	3	1035039	(000000-)	Plate, Tank, Bottom	1
	4	1020341	(000000-)	Screw, Hex, M8 X 1.25 X 20, Ss, Sems	25
	5	1038941	(000000-)	Bracket, Sppt, Tank, Rh	1
	6	1038927	(000000-)	Bracket, Sppt, Tank, Lh	1
	7	1034436	(000000-)	Bracket, Mtg, Lh, Tank, Recvy	1
	8	1034444	(000000-)	Bracket Wldt, Mtg, Rh	1
	9	09010	(000000-)	Screw, Hex, M8 X 1.25 X 25, Ss	4
	10	32491	(000000-)	Washer, Flat, 0.31, Std	8
	11	08713	(000000-)	Nut, Hex, Lock, M8 X 1.25, Nl, Ss	4
	12	1037085	(000000-)	Gasket, Cover, Recvy Tank	1
	13	1031610	(000000-)	Hose Assy, Sqge	1
	14	1021920	(000000-)	Gasket, Ure, .16, 3.23id 3.63od	1
	15	1021090	(000000-)	Plate, Sppt, Tank	1
	16	1039072	(000000-)	Bracket, Sppt, Cover, Tank, Recvy	2
	17	1039049	(000000-)	Bracket, Mtg, Cover, Recvy Tank	2
▽		9003313	(000000-)	Plug Kit, Drain, Recvy, Ci	1
▲	18	1028328	(000000-)	Tube Wldt, Plug, Drain	1
▲	19	1022370	(000000-)	Plug, Drain, Expandable, 4.75- 6.00	1
▲	20	1072885	(000000-)	Tube Assy, Plug, Drain	1
▲	21	1028522	(000000-)	Washer, Flat, 0.78b 1.75d .18, Ss	1
▲	22	1028173	(000000-)	Pin, Lift, Drain	1
▲	23	360801	(000000-)	Sleeve, 0.31b 0.50d 0.3l, Ss	2
▲	24	1028211	(000000-)	Handle Wldt, Drain	1
▲	25	08712	(000000-)	Nut, Hex, Lock, M6 X 1.00, Nl, Ss	1
▲	26	1035044	(000000-)	Seal, Shaft, Drain Plug	1
▲	27	58979	(000000-)	Screw, Hex, M6 X 1.00 X 55, Fl, Ss	1
	28	1025620	(000000-)	Plate, Mtg, Prop Rod	1
	29	1025619	(000000-)	Bracket, Mtg, Prop Rod	1
	30	1046798	(000000-)	Screw, Hex, .25- 10 X 0.75, Fmg/A, Ss	4
	31	01684	(000000-)	Washer, Flat, 0.27b 0.69d .05, Ss	1
	32	54615	(000000-)	Arm Wldt, Safety, Sppt, Seat, .38d 10.1l	1
	33	08712	(000000-)	Nut, Hex, Lock, M6 X 1.00, Nl, Ss	1
	34	08716	(000000-)	Screw, Hex, M6 X 1.00 X 20, Ss	1
	35	1026014	(000000-)	Screen, Vacuum	1
	36	382320	(000000-)	Screw, Pan, Phl, 12- 16 X 0.50, F/ Plstc	2
▽	37	24358	(000000-)	Cap Assy, Tank, Drain	1
▲	38	1031699	(000000-)	Gasket, .19, 4.05id 5.29od [Buna]	1
	39	86636	(000000-)	Cover, Tank	1
	40	1072878	(000000-)	Switch Assy, Press, 13.0, 17.5l Tube	1
	41	32183	(000000-)	Fitting, Brs, E90, Bm03/Pm02	1
	42	1031572	(000000-)	Hose, Afmkt, Vacuum, 0.16id, 01ft	1

Fig. 46 - Recovery Tank Drain Group

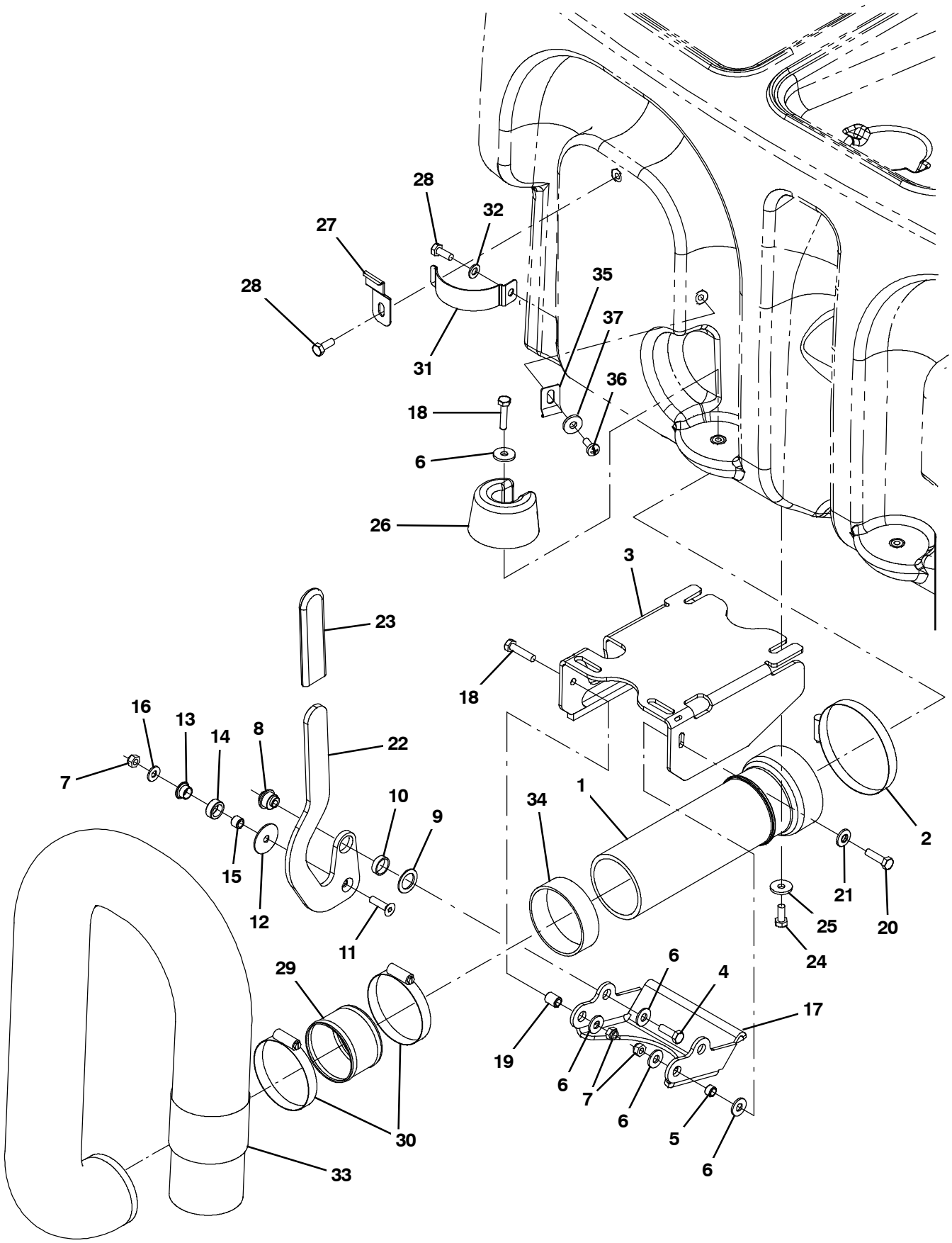

354626

Fig. 46 - Recovery Tank Drain Group

Ref.	Part No.	Serial Number	Description	Qty.
1	9003794	(000000-)	Tube Kit, Tank, Recvy, Replmt	1
2	23498	(000000-)	Clamp, Hose, Wormdrive, 3.56- 4.50d, .50w	1
3	1042010	(000000-)	Mount Wldt, Valve, Pinch, Lh	1
4	39277	(000000-)	Screw, Hex, M8 X 1.25 X 25, 8.8	1
5	222516	(000000-)	Sleeve, P/M, 0.31b 0.50d 0.3l [430ss]	1
6	32491	(000000-)	Washer, Flat, 0.31, Std	5
7	08713	(000000-)	Nut, Hex, Lock, M8 X 1.25, Nl, Ss	3
8	1024599	(000000-)	Bushing, Eccentric, Adj	1
9	1026051	(000000-)	Washer, Flat, 0.79b 1.18d .06, Nyl	1
10	74090	(000000-)	Bushing, Sleeve, 0.75b 0.88d 0.25l	1
11	79506	(000000-)	Screw, Flt, Soc, M8 X 1.25 X 30, Ss	1
12	1028701	(000000-)	Washer, Thrust, 0.34b 1.50d .06	1
13	15648	(000000-)	Bushing, Flng, 0.50b 0.59d 0.38l	1
14	1028691	(000000-)	Roller, Brg	1
15	1028690	(000000-)	Tube, 0.32id 0.50od 00.4l, Ss	1
16	1017218	(000000-)	Washer, Flat, 0.32b 1.00d .12, Ss	1
17	1024535	(000000-)	Arm, Pinch	1
18	06955	(000000-)	Screw, Hex, M8 X 1.25 X 35, 8.8	2
19	80395	(000000-)	Sleeve, P/M, 0.31b 0.50d 0.7l [430ss]	1
20	76570	(000000-)	Screw, Hex, M8 X 1.25 X 30, 8.8	1
21	41186	(000000-)	Washer, Flat, Belleville, .31	1
22	1027039	(000000-)	Handle, Valve, Pinch, Lh	1
23	1023502	(000000-)	Grip, Handle	1
24	09740	(000000-)	Screw, Hex, M8 X 1.25 X 20, Ss	4
25	1017218	(000000-)	Washer, Flat, 0.32b 1.00d .12, Ss	4
26	1022137	(000000-)	Plug, Hose, Pyu	2
27	1025480	(000000-)	Bracket, Retaining, Hose	1
28	15675	(000000-)	Screw, Hex, M8 X 1.25 X 16, Ss	2
29	1041953	(000000-)	Tube, 2.90Id 3.00OD 02.4L, Ss	1
30	43555	(000000-)	Clamp, Hose, Wormdrive, 2.50- 3.50d, .50w	2
31	1024558	(000000-)	Strap, Retaining, Hose	1
32	39349	(000000-)	Washer, Flat, 0.31, Sae	1
33	1019424	(000000-)	Hose, Drain, 3.00id X 48.0l	1
34	1031309	(000000-)	Tube, Acrylic, Clr, 3.25id 3.50od 01.0l	1
35	1043214	(000000-)	Bracket, Retain, Hose	1
36	17284	(000000-)	Screw, Btn, M8 X 1.25 X 16, Ss	1
37	01685	(000000-)	Washer, Flat, 0.38B 0.88D .08, Ss	1

Fig. 47 - Vacuum Fan Group, Scrubbing (000000-004454)

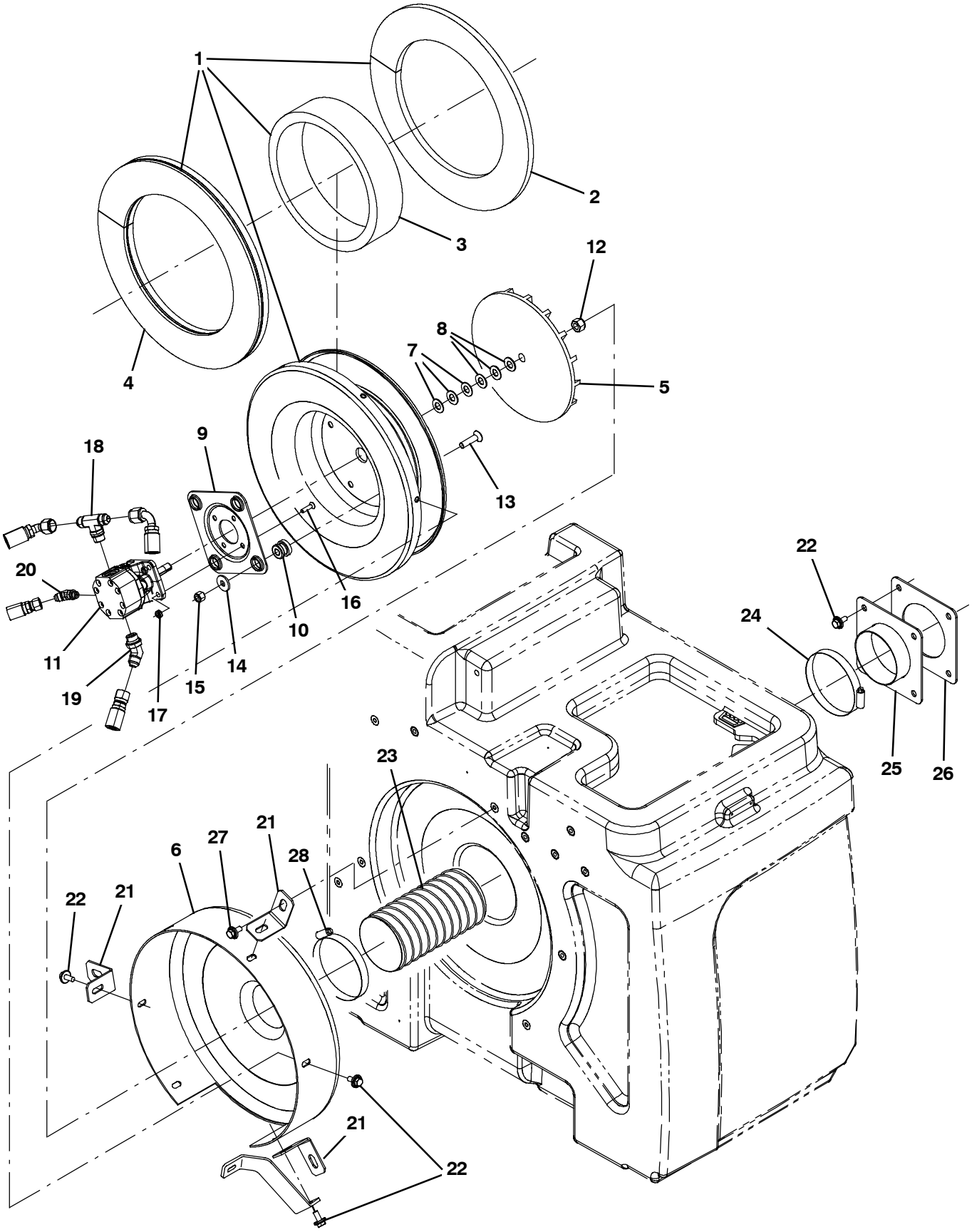

354627 - M30

Fig. 47 - Vacuum Fan Group, Scrubbing (000000-004453)

	Ref.	Part No.	Serial Number	Description	Qty.
▽		9003455	(000000-004453)	Fan Kit, Scrub, Replmt [M20&T20]	1
▲▽	1	9002684	(000000-004453)	Housing Assy, Vacfan, Scrbr	1
▲▲	2	1025888	(000000-004453)	Insulation, Flame-Retardant, 0.50	1
▲▲	3	1025887	(000000-004453)	Insulation, Flame-Retardant, 0.75-0.88	1
▲▲	4	1025872	(000000-004453)	Insulation, Flame-Retardant, 0.75-0.88	1
▲	5	03922	(000000-004453)	Impeller, 9.5d, 18 Bl	1
▲	6	57189	(000000-004453)	Housing Wldt, Vacfan, Front [528]	1
▲	7	75456-3	(000000-004453)	Shim, Washer, 0.88d 0.51b .020	3
▲	8	75456-4	(000000-004453)	Shim, Washer, 0.88d 0.51b .060	3
▲	9	54275A	(000000-004453)	Bracket, Mtg, Motor	1
▲	10	54274	(000000-004453)	Isolator, Vib, Bshg, 1.1d 0.6l .4b 0.78h	4
▲▽	11	9003461	(000000-004453)	Motor Kit, Replmt	1
▲▲		00954	(000000-004453)	Key, Sq, 0.12 X 0.12, 1.00l	1
▲▲		74233	(000000-004453)	Seal Kit, Motor, Hyd, Gear [Barns]	1
▲▲	12	41130	(000000-004453)	Nut, Low Crown, .50-20	1
▲▲	13	54861	(000000-004453)	Screw, Flt, Soc, .38-16 X 1.50, Al	4
▲▲	14	1014563	(000000-004453)	Washer, Flat, 0.40b 1.12d .12, Ss	4
▲▲	15	36643	(000000-004453)	Nut, Hex, Lock, .38-16, Nl, Thin	4
▲▲	16	39534	(000000-004453)	Screw, Flt, Soc, .25-20 X 1.00, Al	4
▲▲	17	32981	(000000-004453)	Nut, Hex, Lock, .25-20, Nl	4
▲▲	18	49933	(000000-004453)	Fitting, Hyd, Tee, Jm08/Jm08/Om08, Br	1
▲▲	19	42226	(000000-004453)	Fitting, Hyd, E45, Jm08/Om08	1
▲▲	20	392609	(000000-004453)	Fitting, Hyd, E45, Jm06/Om04	1
▲	21	1020320	(000000-004453)	Angle, Sppt, Fan	3
▲	22	1020341	(000000-004453)	Screw, Hex, M8 X 1.25 X 20, Ss, Sems	10
	23	1022377	(000000-004453)	Hose, Flex, 4.00d, 24.0l	1
	24	79380	(000000-004453)	Clamp, Hose, Wormdrive, 3.75-4.62d, .62w	1
	25	1023754	(000000-004453)	Plate Wldt, Hose, Vacuum	1
	26	1024853	(000000-004453)	Gasket, Plt, Hose, Vacuum	1
	27	1037346	(000000-004453)	Screw, Hex, M8 X 1.25 X 25, 9.8, Sems	3
	28	23498	(000000-004453)	Clamp, Hose, Wormdrive, 3.56-4.50D, .50W	1

Fig. 48 - Vacuum Fan Group, Scrubbing (004455-)

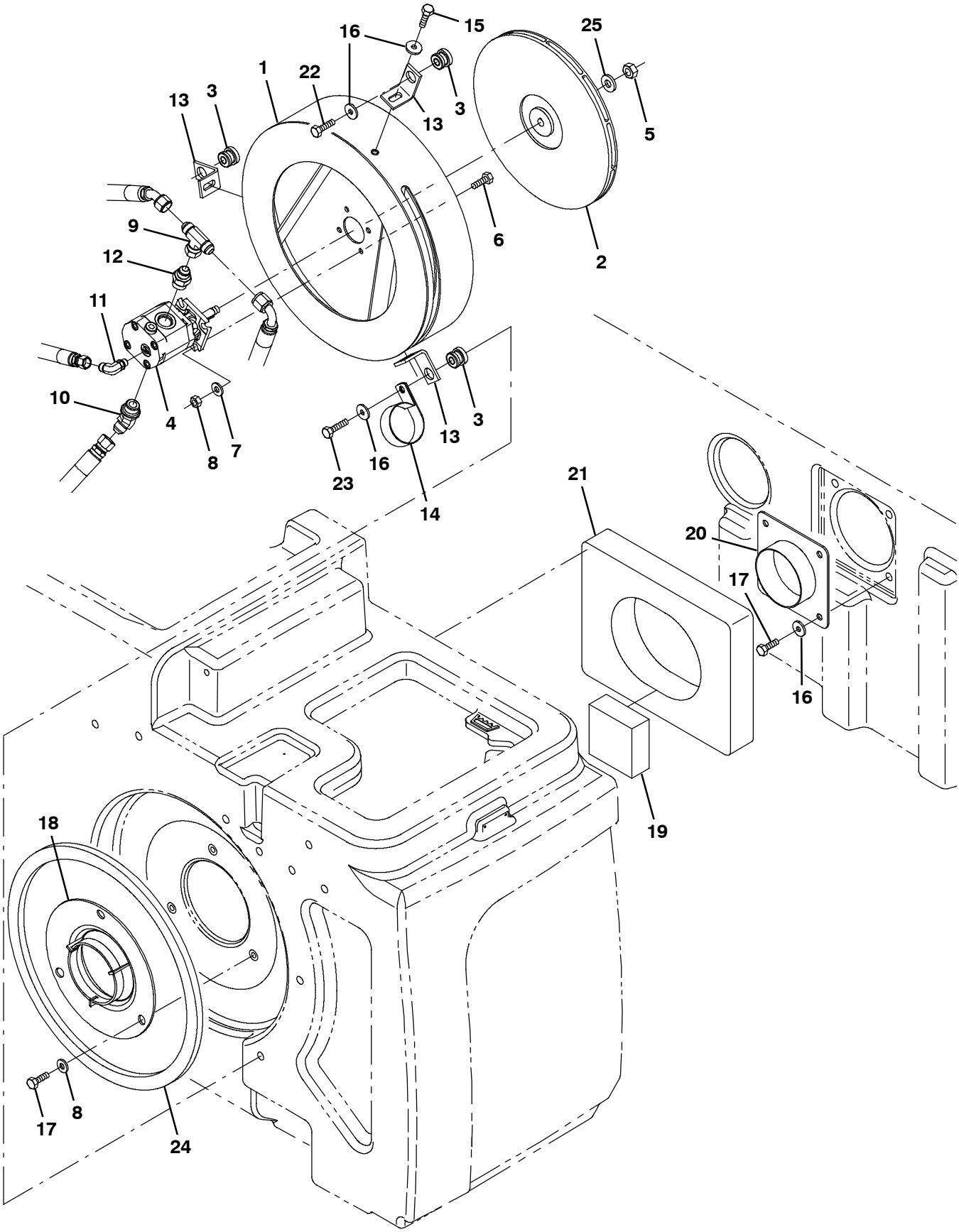

356557 - M30

Fig. 48 - Vacuum Fan Group, Scrubbing (004455-)

Ref.	Part No.	Serial Number	Description	Qty.
1	1068611	(004455-)	Plate Wldt, Mtg, Fan	1
2	1062033	(004455-)	Impeller, 11.81d X 0.500b	1
3	54274	(004455-)	Isolator, Vib, Bshg, 1.1d 0.6l .4b 0.78h	3
4	1071253	(004455-)	Motor, Hyd, Gear, Ext 0.17 Lh 3000	1
5	07788	(004455-)	Nut, Hex, Std, M12 X 1.75, Ss	1
6	09010	(004455-)	Screw, Hex, M8 X 1.25 X 25, Ss	4
7	01685	(004455-)	Washer, Flat, 0.38b 0.88d .08, Ss	7
8	08713	(004455-)	Nut, Hex, Lock, M8 X 1.25, Nl, Ss	4
9	76315	(004455-)	Fitting, Hyd, Tee, Jf08/Jm08/Jm08, Br	1
10	47513	(004455-)	Fitting, Hyd, E45, Jm08/Om10	1
11	77098	(004455-)	Fitting, Hyd, E90, Jm06/Om04	1
12	56692	(004455-)	Fitting, Hyd, Str, Jm08/Om10	1
13	1068644	(004455-)	Angle, Sppt, Fan	3
14	70157	(004455-)	Clamp, Cable, Ss, 2.50d X 1.00w, 1hole	1
15	39277	(004455-)	Screw, Hex, M8 X 1.25 X 25, 8.8	3
16	1017218	(004455-)	Washer, Flat, 0.32b 1.00d .12, Ss	10
17	09740	(004455-)	Screw, Hex, M8 X 1.25 X 20, Ss	7
18	1059100	(004455-)	Housing, Fan, Radial Discharge, Sq Inlet	1
19	1074415	(004455-)	Gasket, 1.50, 03.75w, 03.75l, Adh	1
20	1023754	(004455-)	Plate Wldt, Hose, Vacuum	1
21	1074414	(004455-)	Gasket, 2.00, 10.00w, 13.00l, Adh	1
22	09011	(004455-)	Screw, Hex, M8 X 1.25 X 30, Ss	2
23	09023	(004455-)	Screw, Hex, M8 X 1.25 X 35, Fl, Ss	1
24	1068613	(004455-)	Gasket, Foam, .50, 14.76id 16.54od, Adh	1
25	36328	(004455-)	Washer, Flat, Belleville, .50	1

Fig. 49 - Vacuum Fan Group, Sweeping

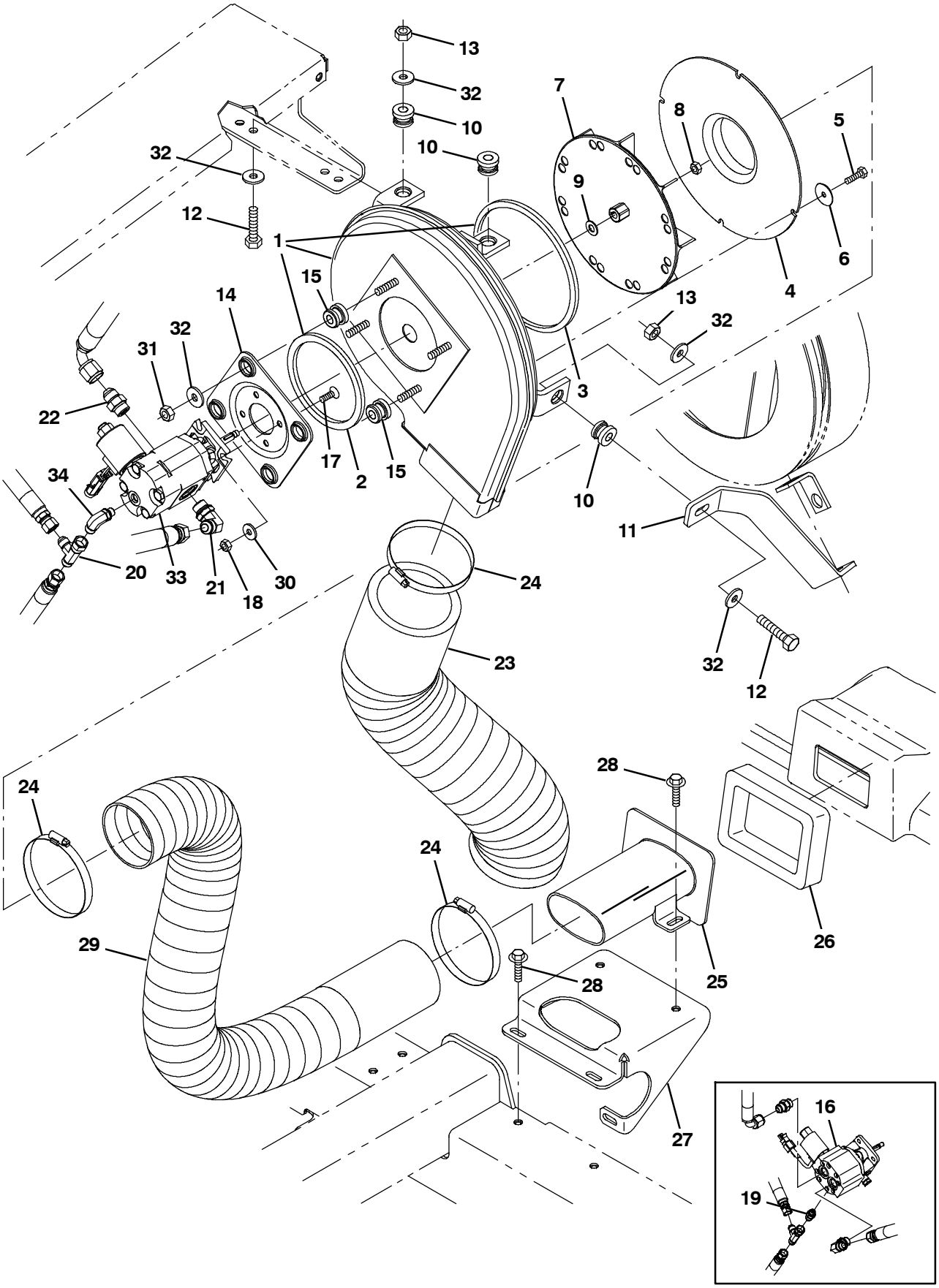

354628 - M30

Fig. 49 - Vacuum Fan Group, Sweeping

	Ref.	Part No.	Serial Number	Description	Qty.
▽	1	9002683	(000000-)	Housing Assy, Vacfan, Swpr	1
▲	2	59967	(000000-)	Seal, Ure, 0.38, 0.75w 13.2l Adh	1
▲	3	59735	(000000-)	Seal, Ure, 0.38, 0.75w 33.0l Adh	1
	4	1018216	(000000-)	Plate, Inlet	1
	5	34323	(000000-)	Screw, Hex, .25- 20 X 0.75, Nl	4
	6	41178	(000000-)	Washer, Flat, 0.25, Fendr	4
	7	74454	(000000-)	Impeller, 9.00d X 1.40w X 0.376b	1
	8	31241	(000000-)	Nut, Hex, Lock, .31- 24, Nl, Thin	1
	9	32485	(000000-)	Washer, Flat, 0.38, Sae	1
	10	59649	(000000-)	Isolator, Vib, Bshg, 1.1d 0.6l .4b 0.78h	3
	11	1037993	(000000-)	Bar, Isolator, Vacfan	1
	12	39285	(000000-)	Screw, Hex, M10 X 1.50 X 40, 8.8	3
	13	41430	(000000-)	Nut, Hex, Lock, M10 X 1.5, Nl	3
	14	54275A	(000000-)	Bracket, Mtg, Motor	1
	15	54274	(000000-)	Isolator, Vib, Bshg, 1.1d 0.6l .4b 0.78h	4
	16	53485	(000000- 004454)	Motor, Hyd, Gear, Ext 0.19 Rh 3000 (See Breakdowns)	1
	17	39534	(000000-)	Screw, Flt, Soc, .25- 20 X 1.00, Al	4
	18	32981	(000000-)	Nut, Hex, Lock, .25- 20, Nl	4
	19	50960	(000000- 004454)	Fitting, Hyd, Str, Jm06/Om04	1
	20	42215	(000000-)	Fitting, Hyd, Tee, Jf06/Jm06/Jm06, Run	1
	21	44868	(000000-)	Fitting, Hyd, E90, Jm08/Om08	1
	22	44869	(000000-)	Fitting, Hyd, Str, Jm08/Om08	1
	23	1025756	(000000-)	Muffler, Vacfan, 4.0id	1
	24	23498	(000000-)	Clamp, Hose, Wormdrive, 3.56- 4.50d, .50w	3
	25	1025841	(000000-)	Duct, Vacfan, Casting	1
	26	1018209	(000000-)	Gasket, Neo, 1.25, 04.45w 06.42l, Adh	1
	27	1035260	(000000-)	Channel, Inlet	1
	28	1037346	(000000-)	Screw, Hex, M8 X 1.25 X 25, 9.8, Sems	5
	29	1035703	(000000-)	Hose, Flex, Vacuum, 03.5d, 040.0l	1
	30	32483	(004455-)	Washer, Flat, 0.25, Sae	4
	31	36643	(000000-)	Nut, Hex, Lock, .38- 16, Nl, Thin	4
	32	1014563	(000000-)	Washer, Flat, 0.40b 1.12d .12, Ss	10
	33	1071240	(004455-)	Motor, Hyd, Gear, Ext 0.17 Lh 3000	1
	34	77098	(004455-)	Fitting, Hyd, E90, Jm06/Om04	1

Fig. 50 - Hydraulic Schematic (000000-001462)

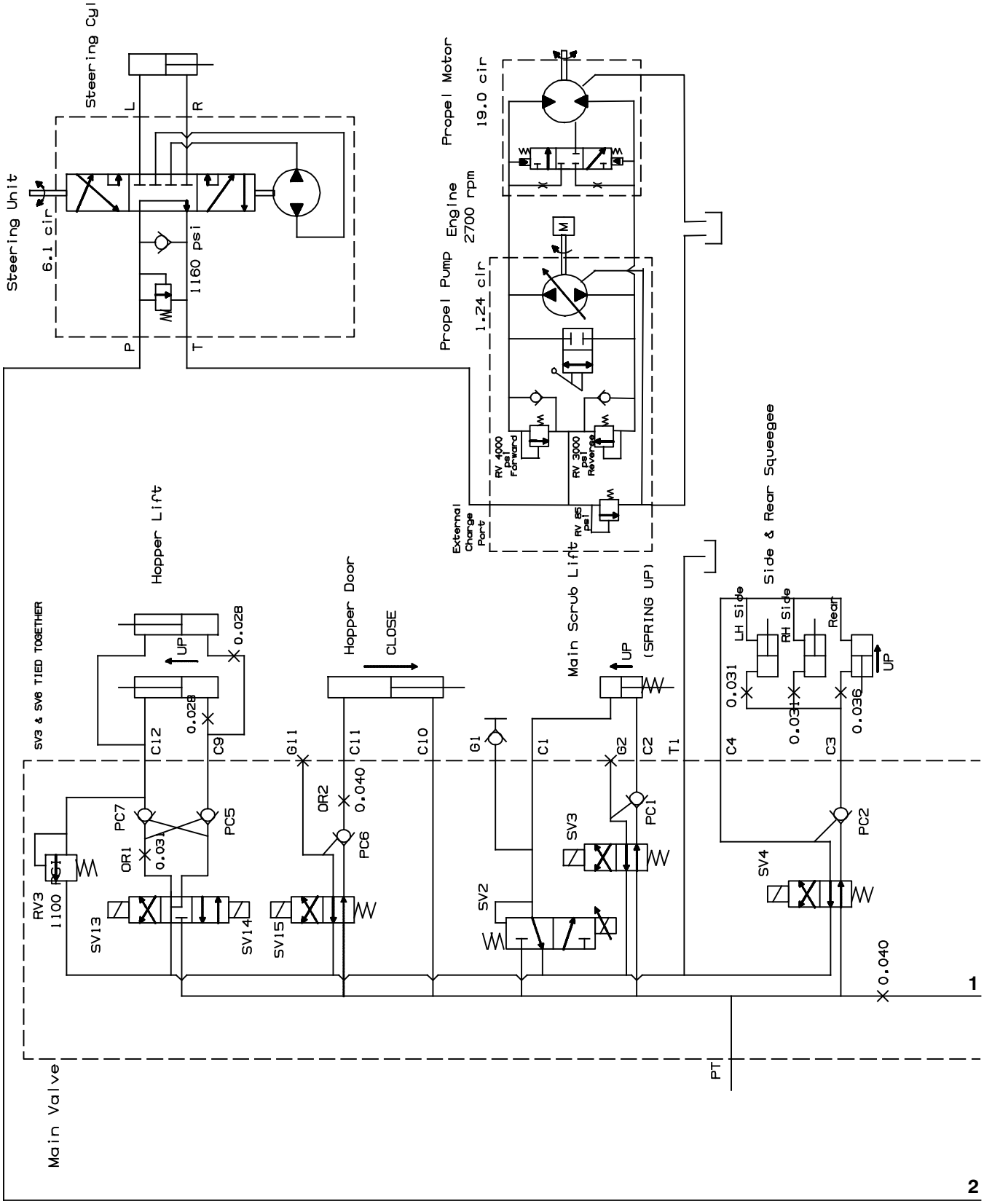

354453, 1034888 - M30

Fig. 50 - Hydraulic Schematic (000000-001462)

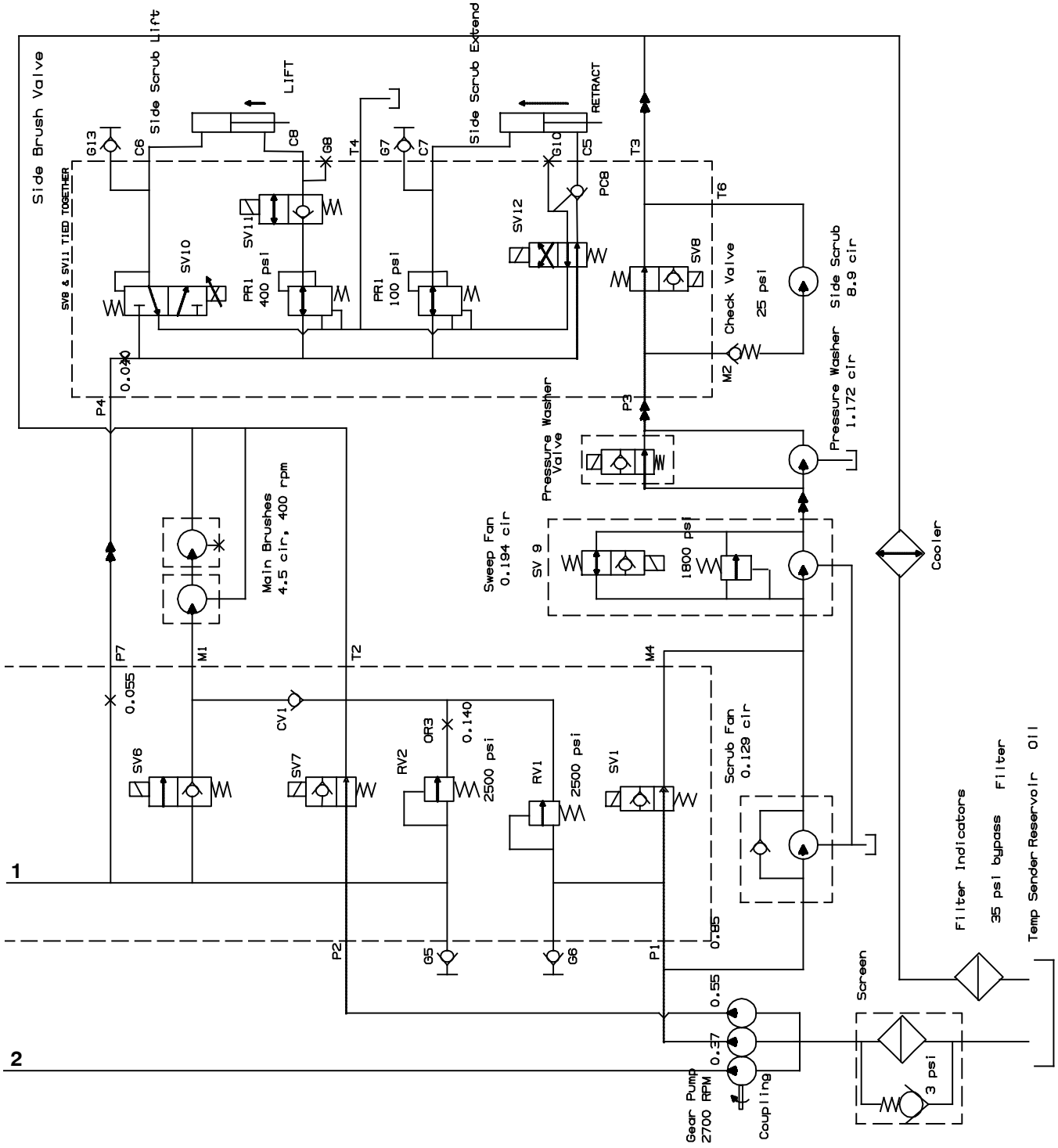

354453, 1034888 - M30

Fig. 51 - Hydraulic Schematic (001463-)

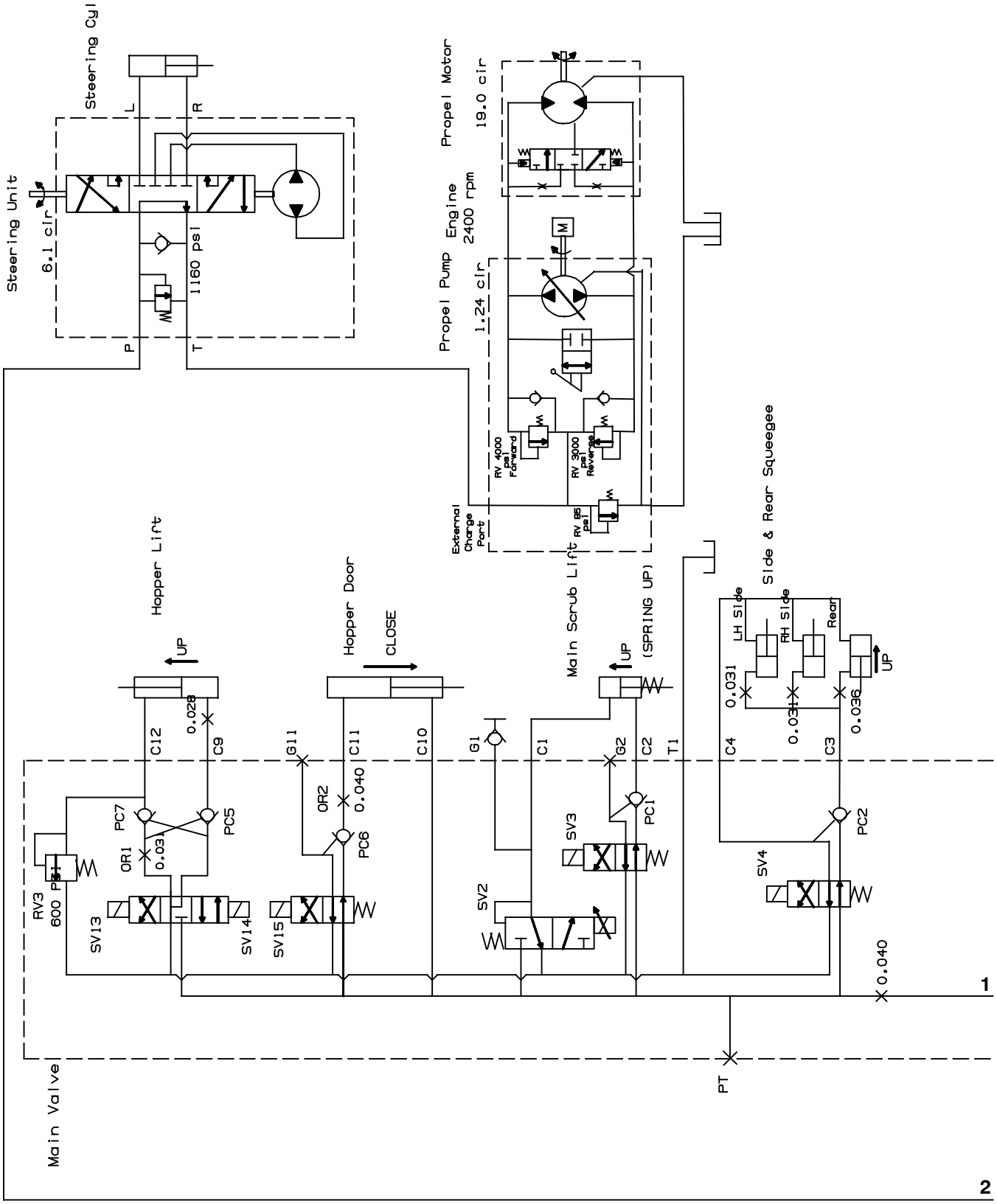

354453, 1034888 - M30

Fig. 51 - Hydraulic Schematic (001463-)

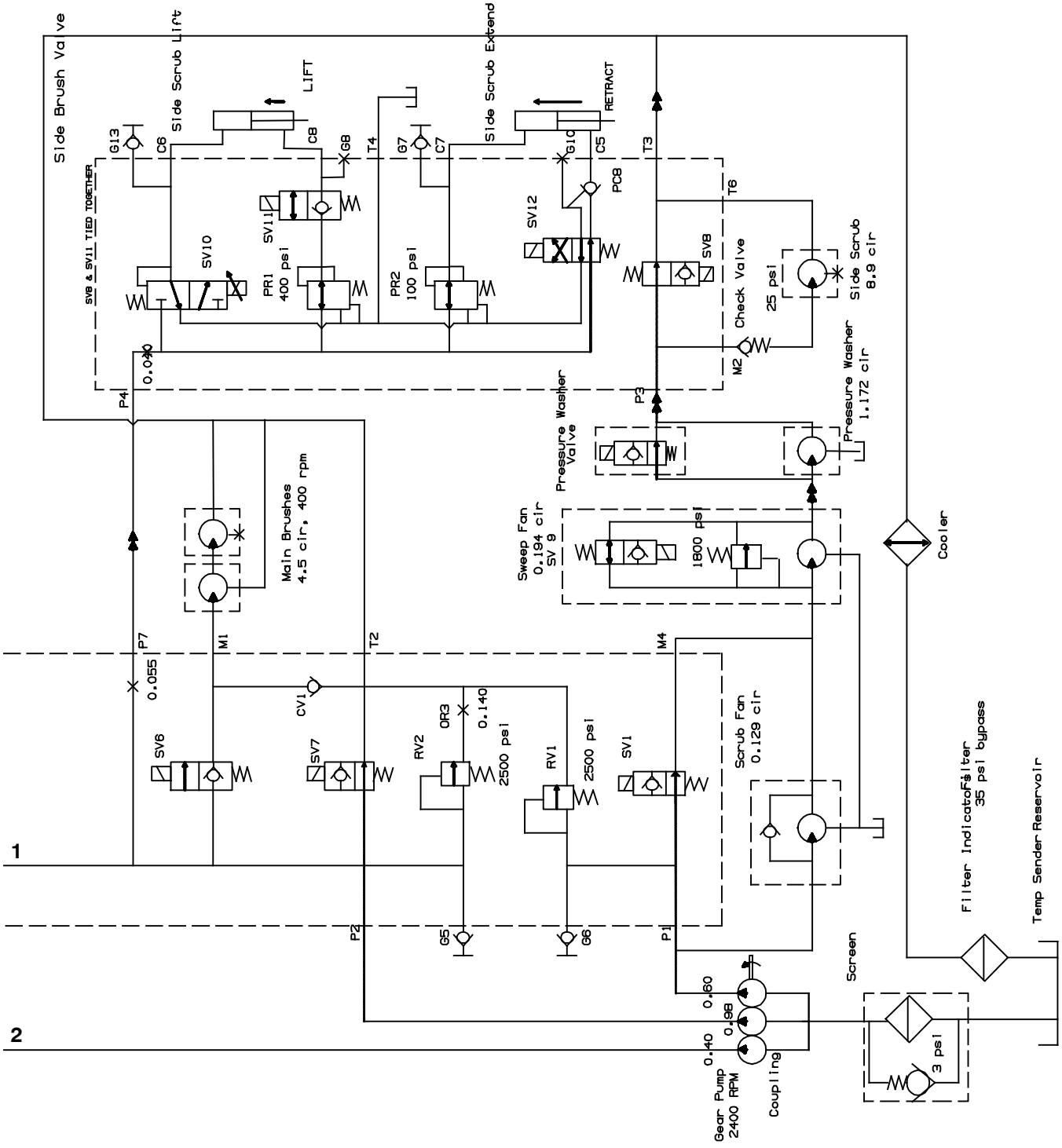

354453, 1034888 - M30

Fig. 52 - Hydraulic Hose Group, Steering and Propel

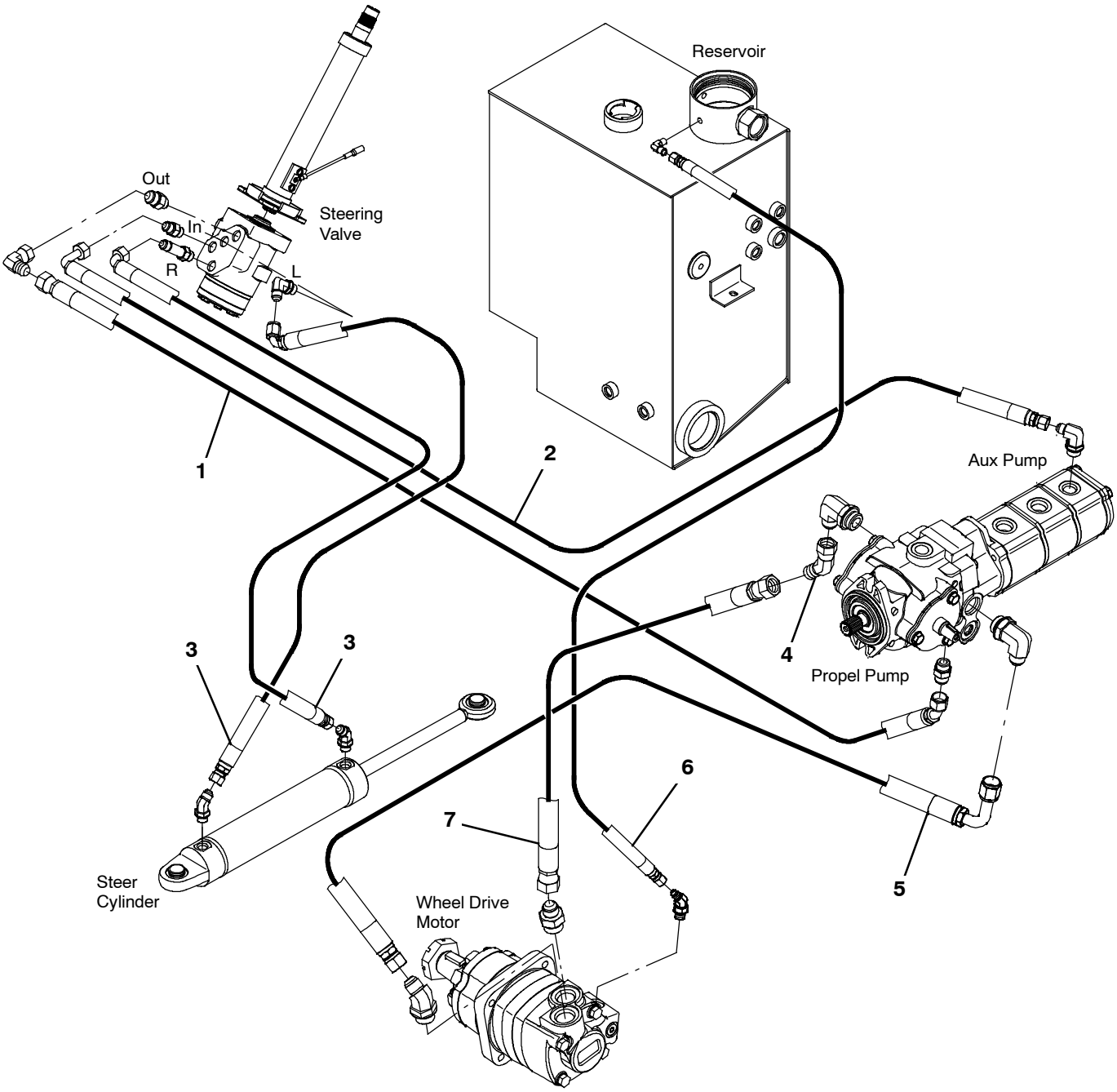

354645

Fig. 52 - Hydraulic Hose Group, Steering and Propel

Ref.	Part No.	Serial Number	Description	Qty.
1	1023609	(000000-)	Hose, Hyd, Tc08, Jf08e45/Jf08str, 096.0	1
2	1023608	(000000-)	Hose, Hyd, Tc06, Jf06e90/Jf06str, 104.0	1
3	396221	(000000-)	Hose, Hyd, Tc06, Jf06e90/Jf06str, 040.0	2
4	54017	(000000-)	Fitting, Hyd, E45, Jf10/Jm10	1
5	1023488	(000000-)	Hose, Hyd, Spcl, Jf10e90/Jf10str, 063.0	1
6	1030404	(000000-)	Hose, Hyd,Med04, Jf04str/Jf04str, 066.0	1
7	1038569	(000000-)	Hose, Hyd, Spcl, Jf10str/Jf10str, 56.5	1

Fig. 53 - Hydraulic Hose Group, Pump and Vacuum Fan (000000-004454)

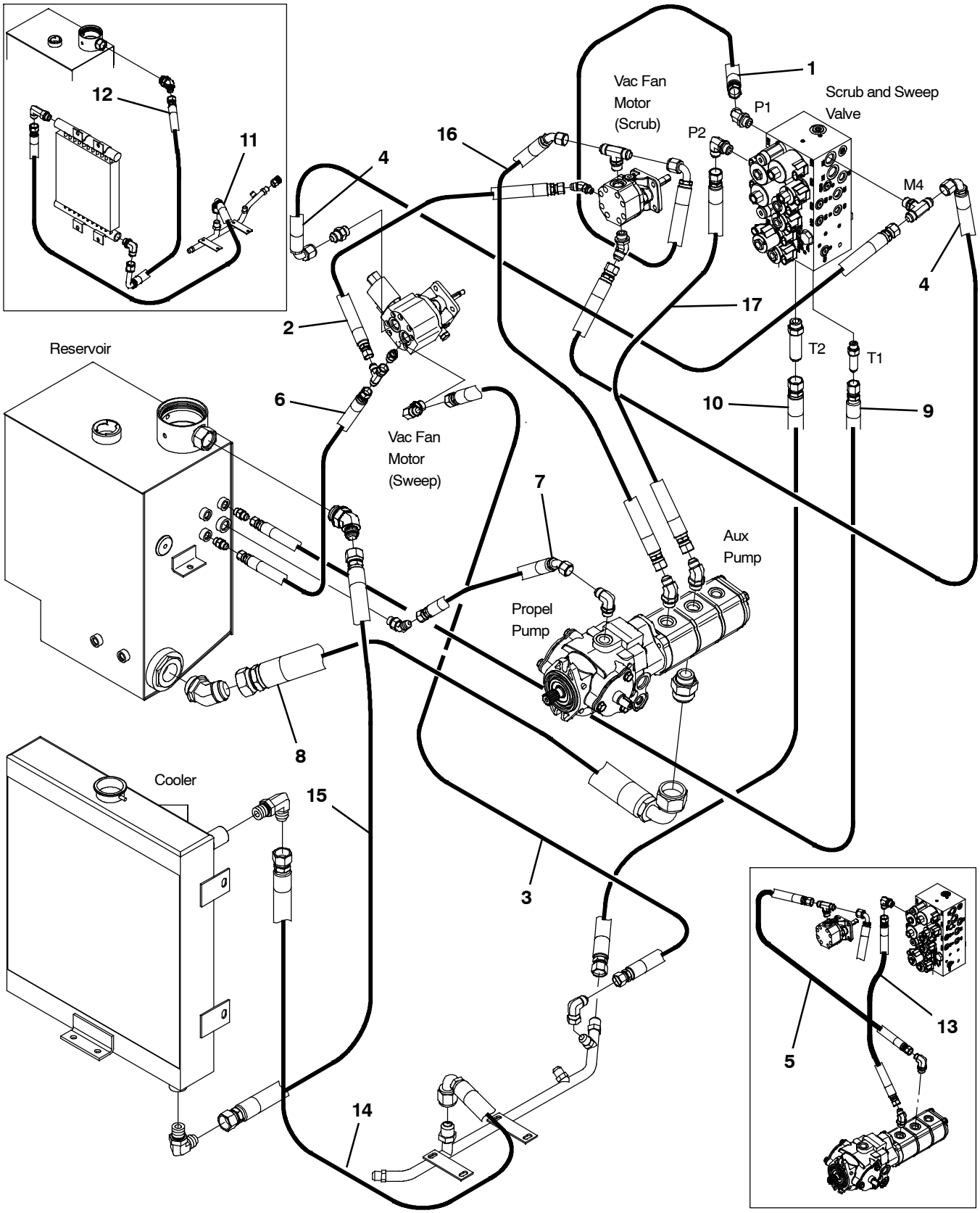

354646 - D

Fig. 53 - Hydraulic Hose Group, Pump and Vacuum Fan (000000-004454)

Ref.	Part No.	Serial Number	Description	Qty.
1	71741	(000000-004454)	Hose, Hyd, Tc08, Jf08e90/Jf08str, 046.0	1
2	16431	(000000-004454)	Hose, Hyd, Med06, Jf06str/Jf06str, 022.0	1
3	1036945	(000000-004454)	Hose, Hyd, Tc08, Jf08str/Jf08str, 031.0	1
4	1040216	(000000-004454)	Hose, Hyd, Tc08, Jf08e90/Jf08str, 029.0	2
5	1026645	(000000-004454)	Hose, Hyd, Tc08, Jf08e45/Jf08str, 026.0	1
6	16431	(000000-004454)	Hose, Hyd, Med06, Jf06str/Jf06str, 022.0	1
7	34395	(000000-004454)	Hose, Hyd, Med08, Jf08str/Jf08str, 025.0	1
8	34351	(000000-004454)	Hose, Hyd, Suc20, Jf20str/Jf20e90, 032.0	1
9	71556	(000000-004454)	Hose, Hyd, Med06, Jf06str/Jf06str, 042.0	1
10	1025547	(000000-004454)	Hose, Hyd, Med10, Jf10Str/Jf10Str, 041.0	1
11	1040664	(000000-001249)	Hose, Hyd, Med12, Jf12e90/Jf12str, 048.0	1
12	1036817	(000000-001249)	Hose, Hyd, Med12, Jf12e90/Jf12str, 056.0	1
13	1023606	(000000-004454)	Hose, Hyd, Tc08, Jf08str/Jf08str, 021.0	1
14	1050436	(001250-004454)	Hose, Hyd, Med12, Jf12E90/Jf12Str, 029.0	1
15	1050437	(001250-004454)	Hose, Hyd, Med12, Jf12Str/Jf12Str, 052.0	1
16	1026645	(001250-004454)	Hose, Hyd, Med12, Jf12Str/Jf12Str, 052.0	1
17	1023606	(001250-004454)	Hose, Hyd, Med12, Jf12Str/Jf12Str, 052.0	1

Fig. 54 - Hydraulic Hose Group, Pump and Vacuum Fan (004455-)

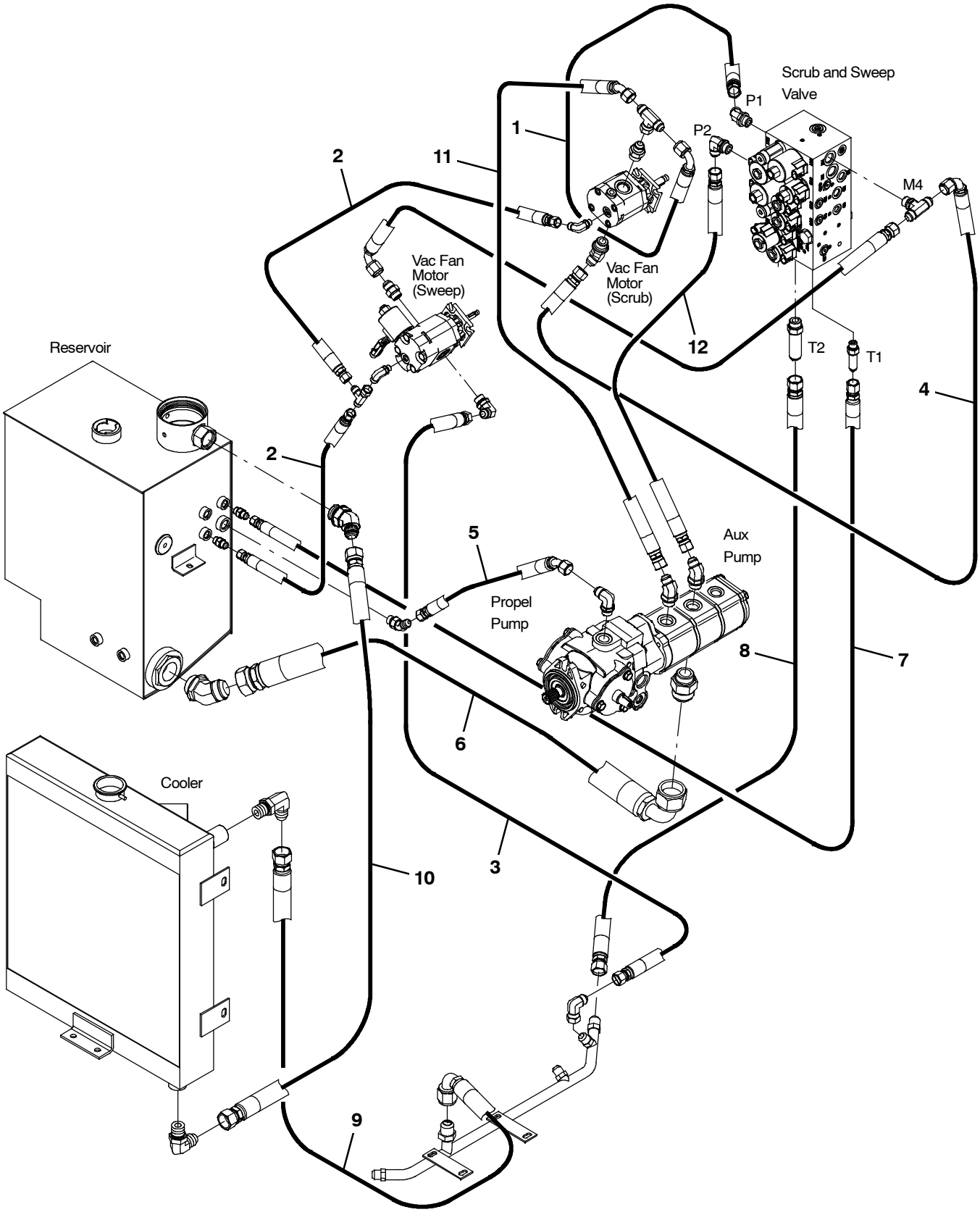

356560 - M30

Fig. 54 - Hydraulic Hose Group, Pump and Vacuum Fan (004455-)

Ref.	Part No.	Serial Number	Description	Qty.
1	71741	(004455-)	Hose, Hyd, Tc08, Jf08e90/Jf08str, 046.0	1
2	16431	(004455-)	Hose, Hyd, Med06, Jf06str/Jf06str, 022.0	2
3	1036945	(004455-)	Hose, Hyd, Tc08, Jf08str/Jf08str, 031.0	1
4	1040216	(004455-)	Hose, Hyd, Tc08, Jf08e90/Jf08str, 029.0	2
5	34395	(004455-)	Hose, Hyd, Med08, Jf08str/Jf08str, 025.0	1
6	34351	(004455-)	Hose, Hyd, Suc20, Jf20str/Jf20e90, 032.0	1
7	71556	(004455-)	Hose, Hyd, Med06, Jf06str/Jf06str, 042.0	1
8	1025547	(004455-)	Hose, Hyd, Med10, Jf10Str/Jf10Str, 041.0	1
9	1050436	(004455-)	Hose, Hyd, Med12, Jf12E90/Jf12Str, 029.0	1
10	1028145	(004455-)	Hose, Hyd, Med12, Jf12Str/Jf12Str, 066.0	1
11	1026645	(004455-)	Hose, Hyd, Tc08, Jf08E45/Jf08Str, 026.0	1
12	1023606	(004455-)	Hose, Hyd, Tc08, Jf08Str/Jf08Str, 021.0	1

Fig. 55 - Hydraulic Hose Group, Brush and Hopper

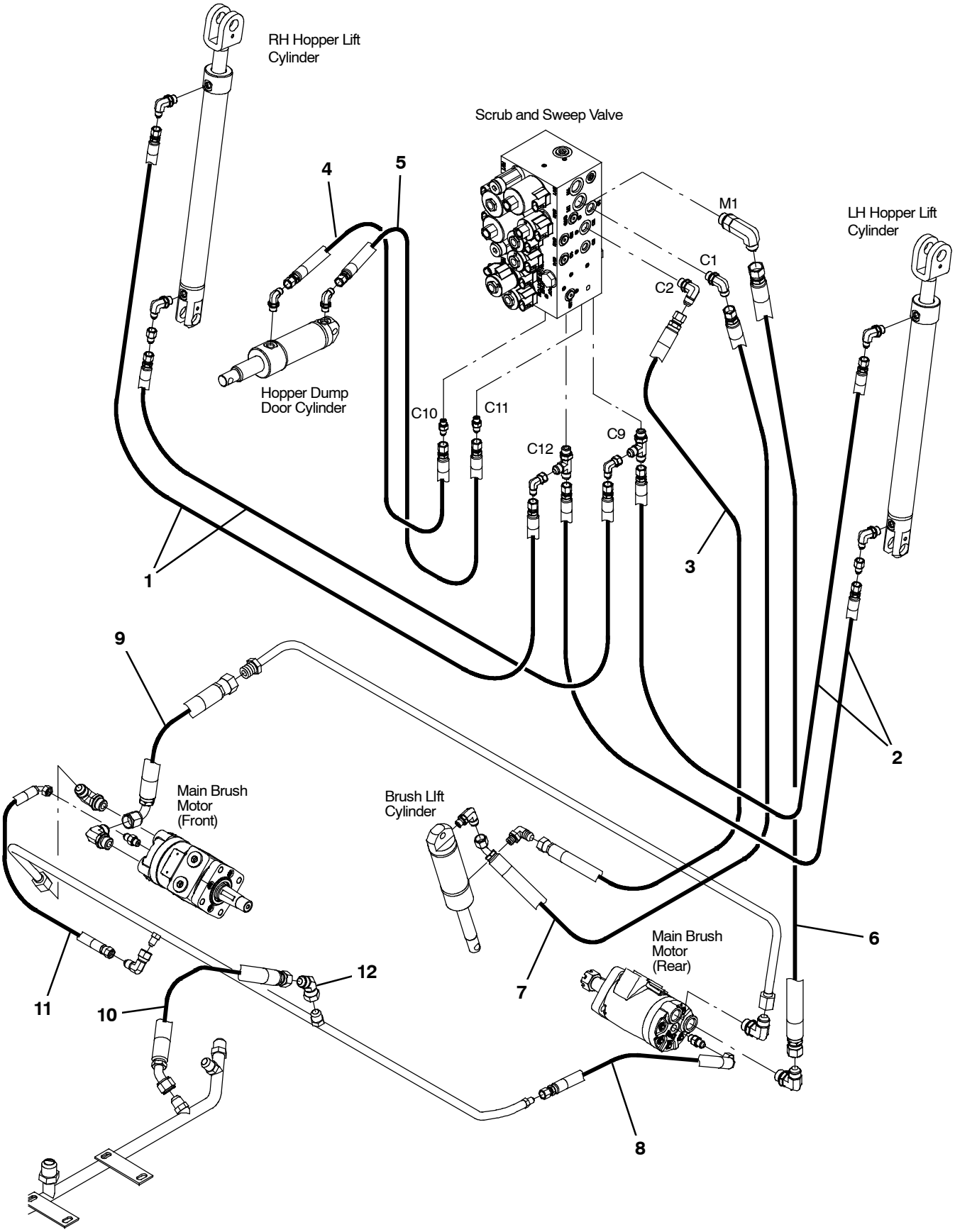

354647

Fig. 55 - Hydraulic Hose Group, Brush and Hopper

Ref.	Part No.	Serial Number	Description	Qty.
1	1040628	(000000-)	Hose, Hyd, Tc04, Jf04str/Jf04str, 96.0	2
2	1040629	(000000-)	Hose, Hyd, Tc04, Jf04str/Jf04str, 58.0	2
3	1036939	(000000-)	Hose, Hyd, Tc06, Jf06str/Jf06str, 054.0	1
4	1040764	(000000-)	Hose, Hyd, Spcl, Jf04str/Jf04str, 144.0	1
5	1040763	(000000-)	Hose, Hyd, Spcl, Jf04str/Jf04str, 140.0	1
6	1024764	(000000-)	Hose, Hyd, Tc08, Jf08str/Jf08str, 048.0	1
7	1023769	(000000-)	Hose, Hyd, Tc06, Jf06str/Jf06e45, 056.0	1
8	57946	(000000-)	Hose, Hyd, Med04, Jf04e90/Jf04str, 016.0	1
9	1025544	(000000-)	Hose, Hyd, Tc08, Jf08e90/Jf08str, 013.0	1
10	364978	(000000- 004420)	Hose, Hyd, Med08, Jf08e45/Jf08str, 029.0	1
10	1041391	(004421-)	Hose, Hyd, Tc08, Jf08e45/Jf08str, 018.0	1
11	387281	(001221-)	Hose, Hyd, Tc04, Jf04e90/Jf04str, 020.0	1
12	07797	(004421-)	Fitting, Hyd, E45, Jf08/Jm08	1

Fig. 56 - Hydraulic Hose Group, Squeegee Lift

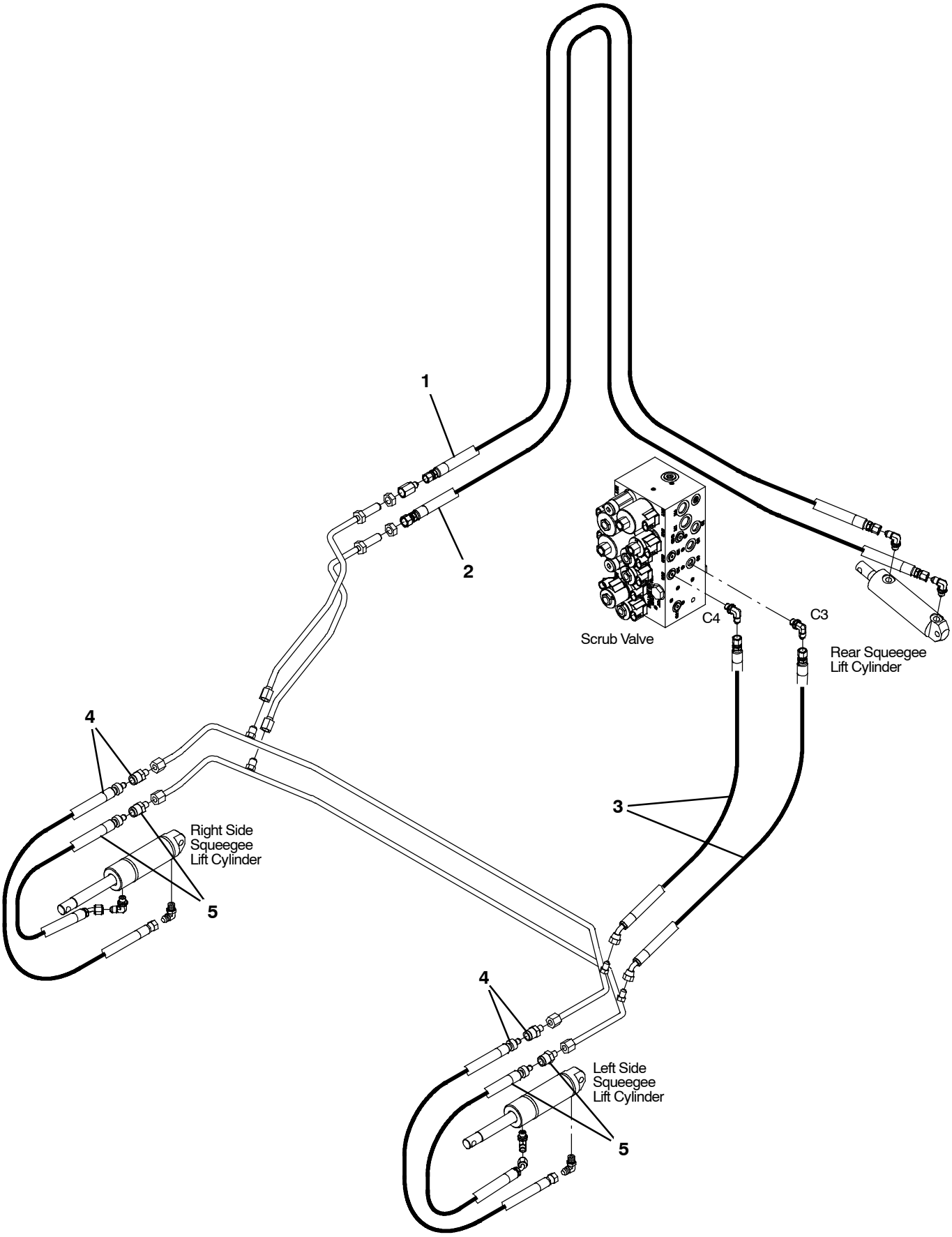

354648

Fig. 56 - Hydraulic Hose Group, Squeegee Lift

Ref.	Part No.	Serial Number	Description	Qty.
1	1036956	(000000-)	Hose, Hyd, Spcl, Jf04str/Jf04str, 133.0	1
2	1036955	(000000-)	Hose, Hyd, Spcl, Jf04str/Jf06str, 136.0	1
3	1030709	(000000-)	Hose, Hyd, Tc04, Jf04str/Jf04e45, 035.0	2
4	1045759	(000000-)	Hose, Hyd, Tc04, Jf04Str/Qm06, 028.0	2
5	1036899	(000000-)	Hose, Hyd, Tc04, Jf04e45/Qm06, 024.0	2

Fig. 57 - Hydraulic Pumps Group

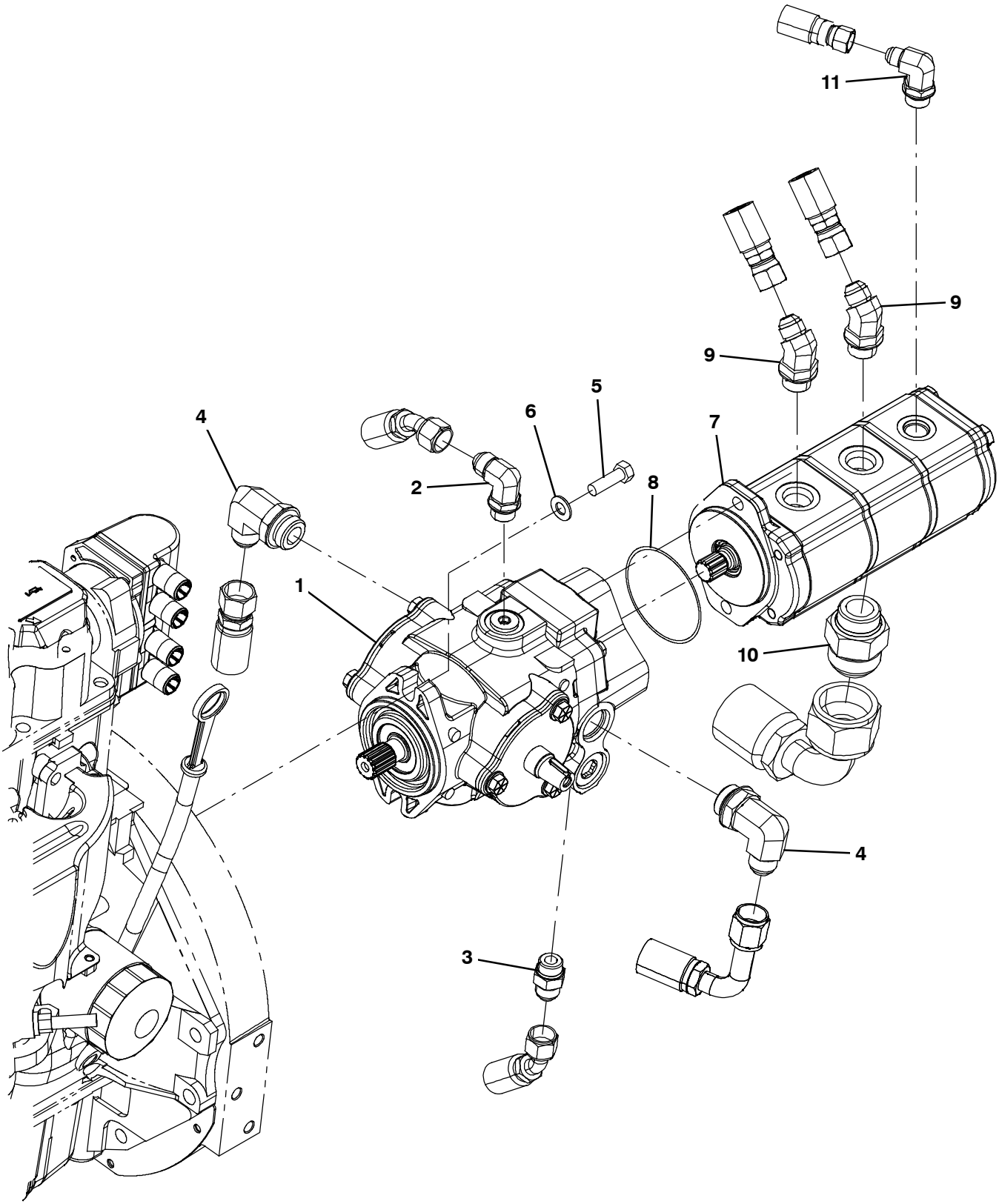

354454

Fig. 57 - Hydraulic Pumps Group

Ref.	Part No.	Serial Number	Description	Qty.
1	1024251	(000000-)	Pump, Hyd, Piston, Var, 1.24 4000, Cw (See Breakdowns)	1
2	44868	(000000-)	Fitting, Hyd, E90, Jm08/Om08	1
3	44869	(000000-)	Fitting, Hyd, Str, Jm08/Om08	1
4	53076	(000000-)	Fitting, Hyd, E90, Jm10/Om12	2
5	21198	(000000-)	Screw, Hex, .38- 16 X 1.25, G5	2
6	32485	(000000-)	Washer, Flat, 0.38, Sae	2
7	1034448	(000000- 001462)	Pump, Hyd, Gear, Ext, 3, 00.85 2500, CW (See Breakdowns) (Replaced by 9007143)	1
7	9007143	(001463- 003999)	Pump kit, Mtg, Aux, Ci [M20 & T20]	1
7	9007142	(004000-)	Pump kit, Mtg, Aux, Ci [M20 & T20]	1
8	65145- 1	(000000-)	Seal, Org, .069 X 03.06id	1
9	47513	(000000-)	Fitting, Hyd, E45, Jm08/Om10	1
10	67811	(000000-)	Fitting, Hyd, Str, Jm20/Om16	1
11	47512	(000000-)	Fitting, Hyd, E90, Jm06/Om08	1

Fig. 58 - Hydraulic Cooler and Tubes Group

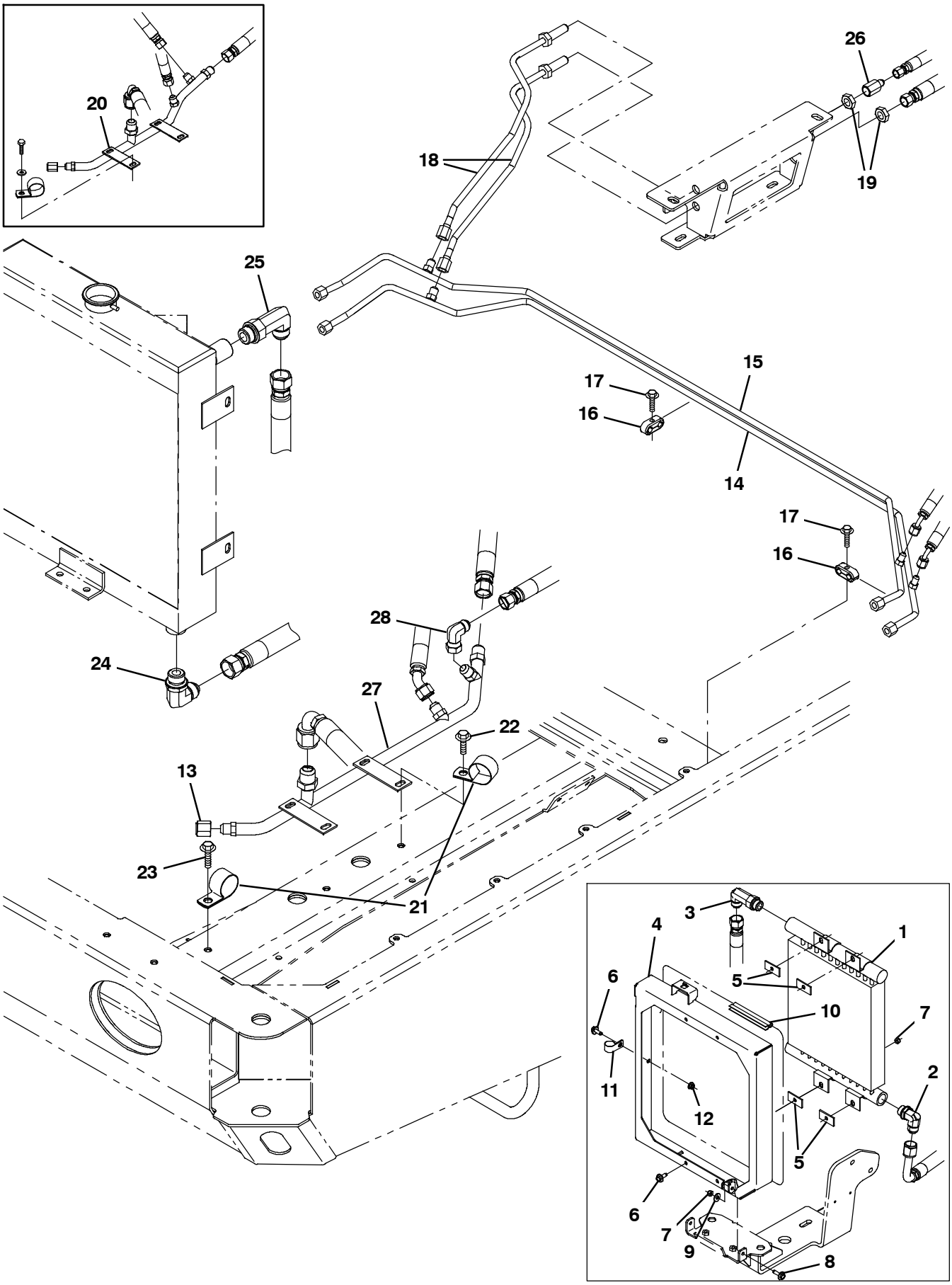

354644

Fig. 58 - Hydraulic Cooler and Tubes Group

Ref.	Part No.	Serial Number	Description	Qty.
1	13698	(000000- 001249)	Cooler, Hyd, 25gpm 325btu Of12 13x12x2	1
2	46481	(000000- 001249)	Fitting, Hyd, E90, Jm12/Om12	1
3	62471	(000000- 001249)	Fitting, Hyd, E90, Jm12/Om12, Long	1
4	1033290	(000000- 001249)	Bracket Wldt, Cooler, Hyd Fluid	1
5	1040318	(000000- 001249)	Pad, Tank, Hyd [W/Psa]	4
6	1037346	(000000- 001249)	Screw, Hex, M8 X 1.25 X 25, 9.8, Sems	5
7	08709	(000000- 001249)	Nut, Hex, Lock, M8 X 1.25, Nl	6
8	1037354	(000000- 001249)	Screw, Hex, M8 X 1.25 X 30, 9.8, Sems	2
9	32491	(000000- 001249)	Washer, Flat, 0.31, Std	2
10	1031632	(000000- 001249)	Seal, Afmkt, Bulb, Str, .50D F/11Ga 08Ft	1
11	69234	(000000- 001249)	Clamp, Cable, Stl, 1.00d X 0.75w, 1hole	1
12	07791	(000000- 001249)	Nut, Hex, Flng, M8 X 1.25	1
13	60090	(000000-)	Fitting, Hyd, Cap, Jf08	1
14	1042126	(000000-)	Tube, Hyd, 06, Sqge Lift	1
15	1042096	(000000-)	Tube, Hyd, 06, Sqge Lift	1
16	1043166	(000000-)	Clamp, Tube, 0.37d 0.37d, 2 Hole	2
17	222159	(000000-)	Screw, Hex, M6 X 1.00 X 25, Fmg	2
18	1028823	(000000-)	Tube, Hyd, Rear Sqge [M20]	2
19	35904	(000000-)	Nut, Ftg, Hyd, 0.56- 18	2
20	1036959	(000000- 003999)	Tube, Hyd, Main Return	1
21	53466	(000000-)	Clamp, Cable, Stl, 1.50d X 1.00w, 1hole	2
22	1037346	(000000-)	Screw, Hex, M8 X 1.25 X 25, 9.8, Sems	1
23	1037354	(000000-)	Screw, Hex, M8 X 1.25 X 30, 9.8, Sems	1
24	46481	(001250-)	Fitting, Hyd, E90, Jm12/Om12	1
25	62471	(001250-)	Fitting, Hyd, E90, Jm12/Om12, Long	1
26	47752	(000000-)	Fitting, Hyd, Str, Jf06/Jm04	1
27	1071173	(004000-)	Tube, Hyd, Main Return [G/Lp Mit2013]	1
28	17980	(004000-)	Fitting, Hyd, E90, Jf08/Jm08	1

Fig. 59 - Hydraulic Reservoir Group

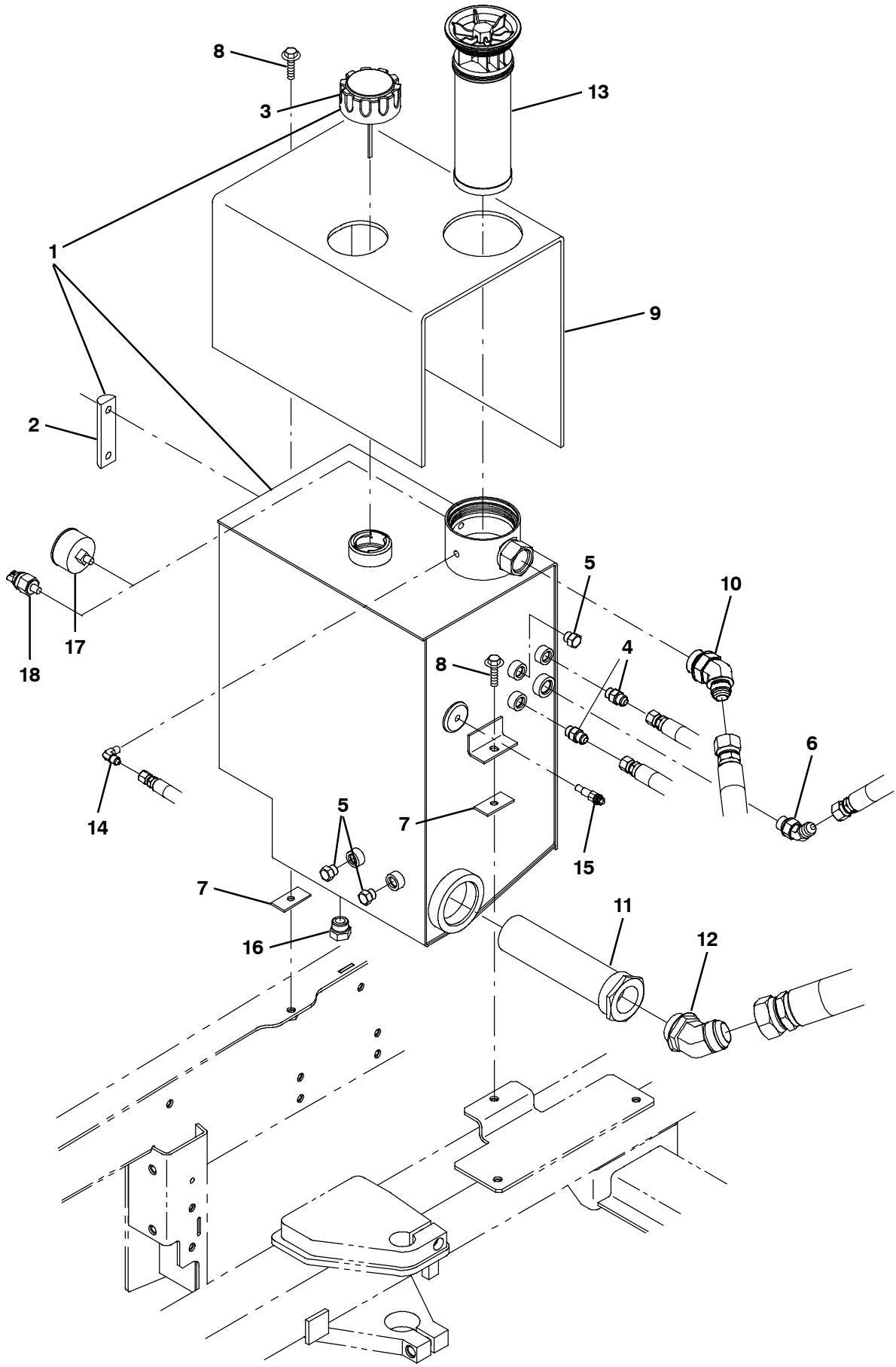

354641

Fig. 59 - Hydraulic Reservoir Group

	Ref.	Part No.	Serial Number	Description	Qty.
▽	1	9002398	(000000-)	Reservoir, Hyd, 10.0gal, Replmt	1
▲	2	65215	(000000-)	Gauge, Sensing, Level	1
▲	3	25122	(000000-)	Cap, Breather, Hyd, 2.4 Ds	1
	3	1018289	(000000-)	Cap, Breather, Hyd w/Chain (CE Only)	1
	4	56690	(000000-)	Fitting, Hyd, Str, Jm06/Om06	2
	5	46482	(000000-)	Fitting, Hyd, Plug, Om06	3
	6	42226	(000000-)	Fitting, Hyd, E45, Jm08/Om08	1
	7	1040318	(000000-)	Pad, Tank, Hyd [W/Psa]	2
	8	1037354	(000000-)	Screw, Hex, M8 X 1.25 X 30, 9.8, Sems	2
	9	1034878	(000000-)	Insulation, Thermal, Hyd Blanket	1
	10	1023545	(000000-)	Fitting, Hyd, E45, Jm12/Om16	1
	11	31613	(000000-)	Strainer, Hyd, 025gpm 100mesh 03psi	1
	12	71726	(000000-)	Fitting, Hyd, E45, Jm20/Om20	1
	13	1021579	(000000-)	Filter Assy, Hyd, 10mic	1
	14	55455	(000000-)	Fitting, Hyd, E90, Jm04/Pm02	1
	15	58592	(000000-)	Send- Unit, Water, Temp,04npt[113oh/195d]	1
	16	40362	(000000-)	Fitting, Hyd, Plug, Om10	1
	17	1025132	(000000-)	Indicator, Press, 60psi (NA Only)	1
	18	1025133	(000000-)	Switch, Press, Hyd, 18- 24Psi, Spst, No (CE Only)	1

Fig. 60 - Hydraulic Valve Group

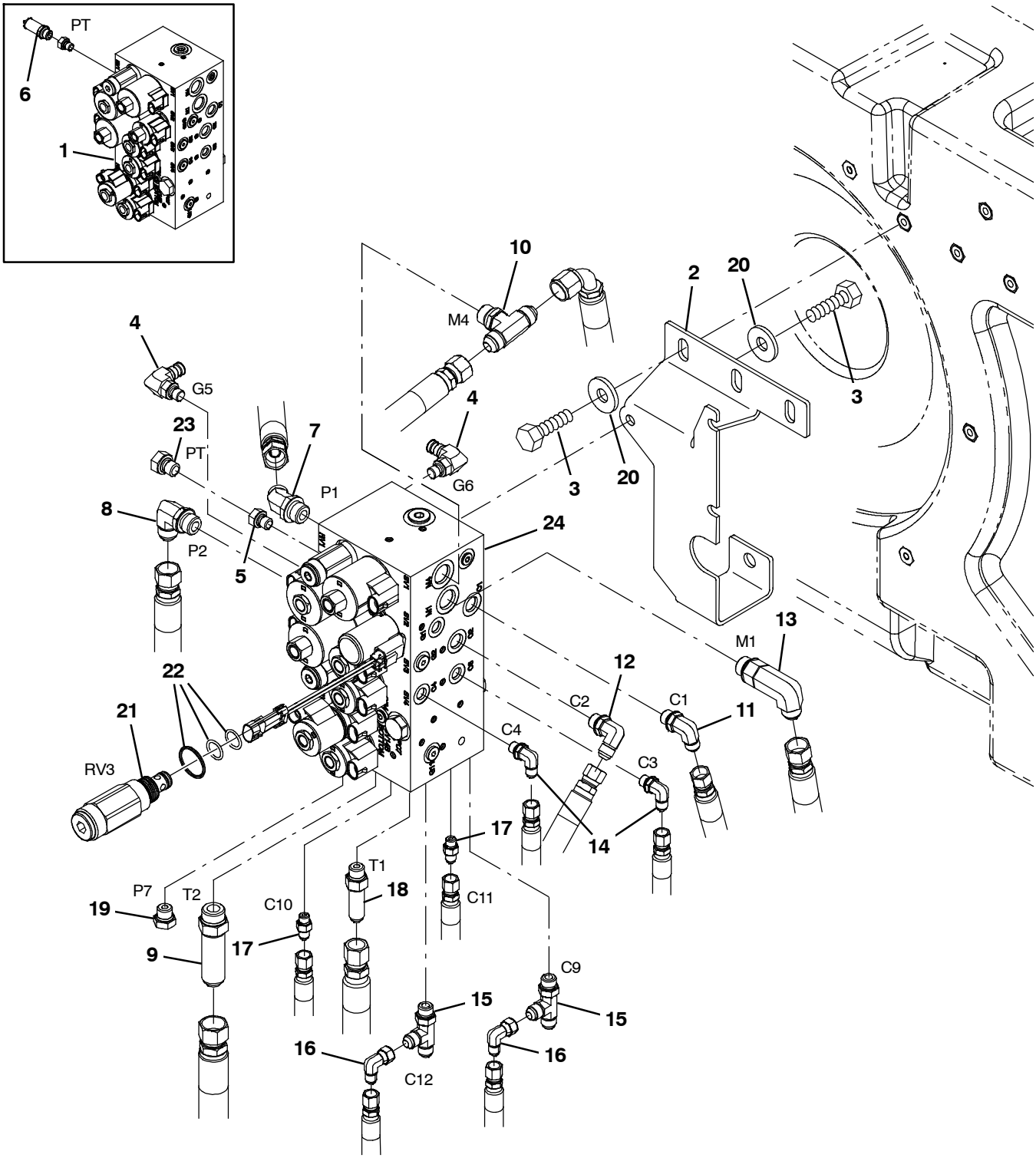

354642

Fig. 60 - Hydraulic Valve Group

	Ref.	Part No.	Serial Number	Description	Qty.
	1	1038566	(000000- 004113)	Valve, Hyd, Solenoid, 12vdc (See Breakdowns)	1
	2	1040339	(000000-)	Bracket, Mtg, Valve, Hyd	1
	3	09740	(000000-)	Screw, Hex, M8 X 1.25 X 20, Ss	7
	4	395974	(000000-)	Fitting, Hyd, E90, Om04/Qm04	2
	5	9000990	(000000-)	Fitting, Hyd, Str, Om04/Pf04	1
	6	1037336	(000000- 001395)	Sensor, Hyd, 3000 Psi (Replaced by 9007155)	1
	7	42226	(000000-)	Fitting, Hyd, E45, Jm08/Om08	1
	8	69173	(000000-)	Fitting, Hyd, E90, Jm08/Om08, Long	1
	9	1040876	(000000-)	Fitting, Hyd, Str, Jm10/Om10, Long	1
	10	49933	(000000-)	Fitting, Hyd, Tee, Jm08/Jm08/Om08, Br	1
	11	56820	(000000-)	Fitting, Hyd, E90, Jm06/Om06	1
	12	71727	(000000-)	Fitting, Hyd, E90, Jm06/Om06, Long	1
	13	69173	(000000-)	Fitting, Hyd, E90, Jm08/Om08, Long	1
	14	77097	(000000-)	Fitting, Hyd, E90, Jm04/Om04	2
	15	34390	(000000-)	Fitting, Hyd, Tee, Jm04/Jm04/Om04, Run	2
	16	39210	(000000-)	Fitting, Hyd, E90, Jf04/Jm04	2
	17	55586	(000000-)	Fitting, Hyd, Str, Jm04/Om04	2
	18	59577	(000000-)	Fitting, Hyd, Str, Jm06/Om06, Long	1
	19	46482	(000000-)	Fitting, Hyd, Plug, Om06	1
	20	1017218	(000000-)	Washer, Flat, 0.32B 1.00D .12, Ss	1
▽	21	1043459	(000000-)	Valve, Relief, 1100 Psi	1
▲	22	373647	(000000-)	Seal Kit, Cartridge	1
	23	33812	(001396-)	Fitting, Hyd, Plug, Om04	1
	24	1072995	(004114-)	Valve, Cntrl, Hyd, Solenoid, 12vdc 10gpm (See Breakdowns)	1

Fig. 61 - Electrical Schematic, (000000-001544)

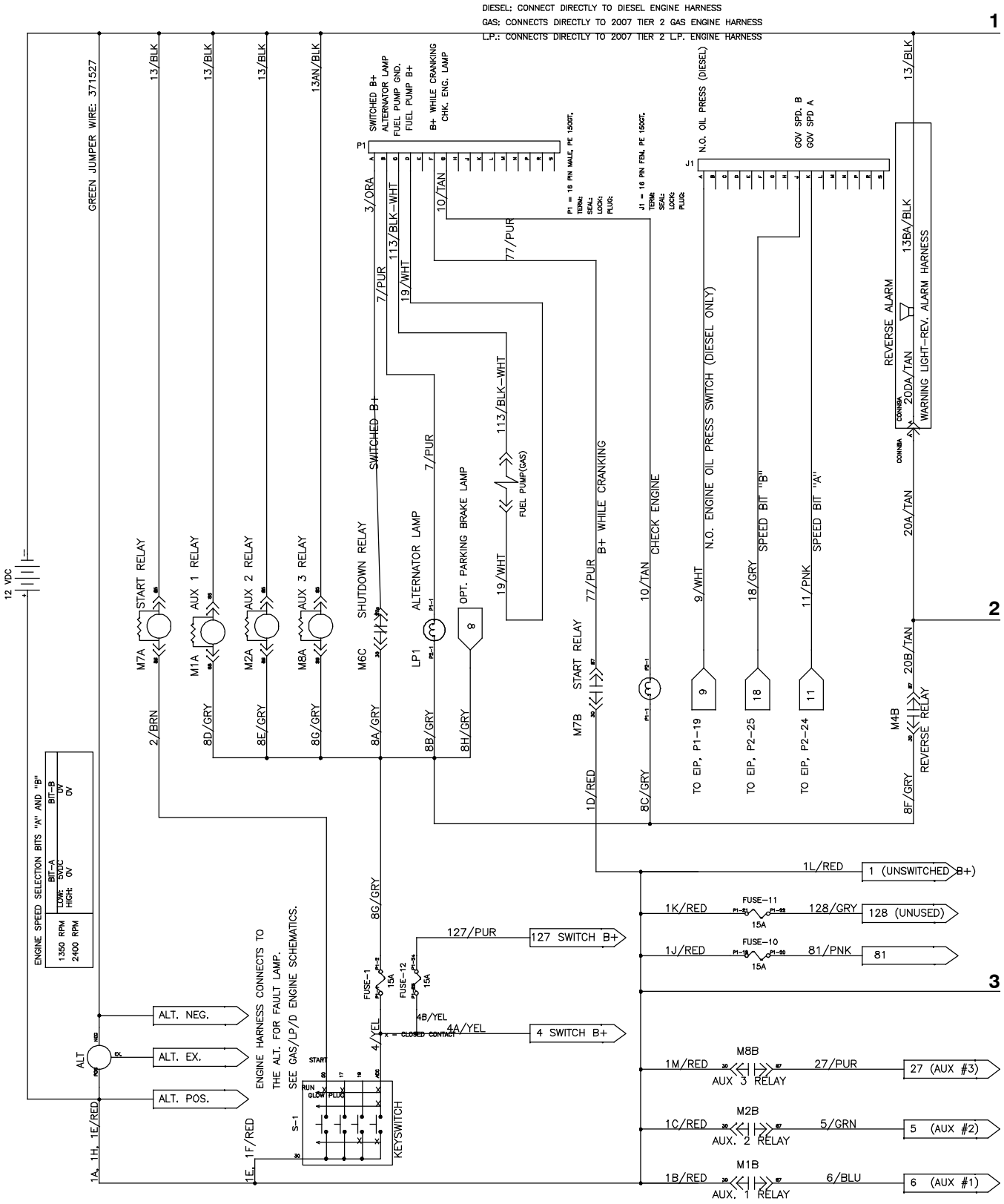

1033626 - 354727

Fig. 61 - Electrical Schematic, (000000-001544)

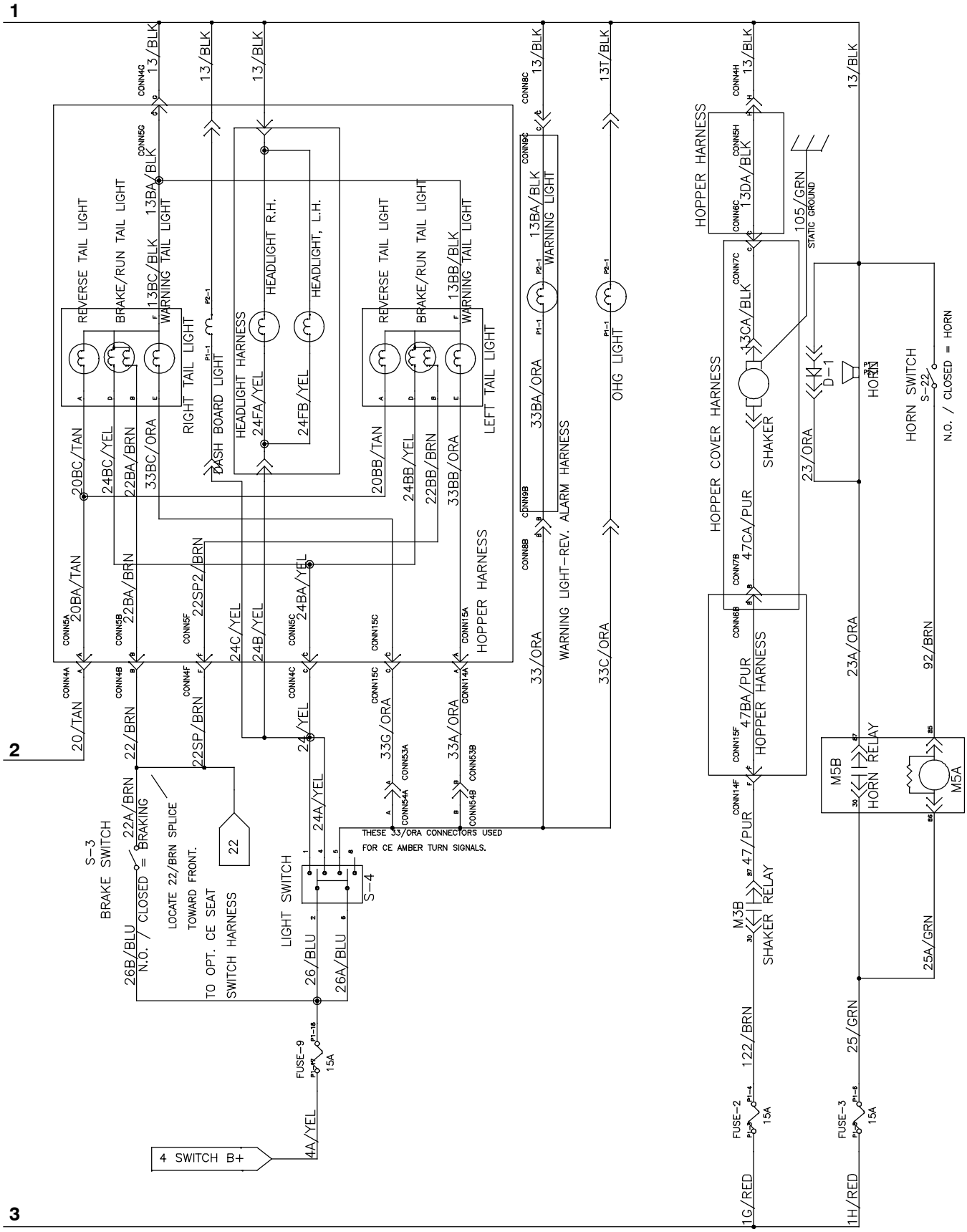

1033626 - 354727

Fig. 61 - Electrical Schematic, (000000-001544)

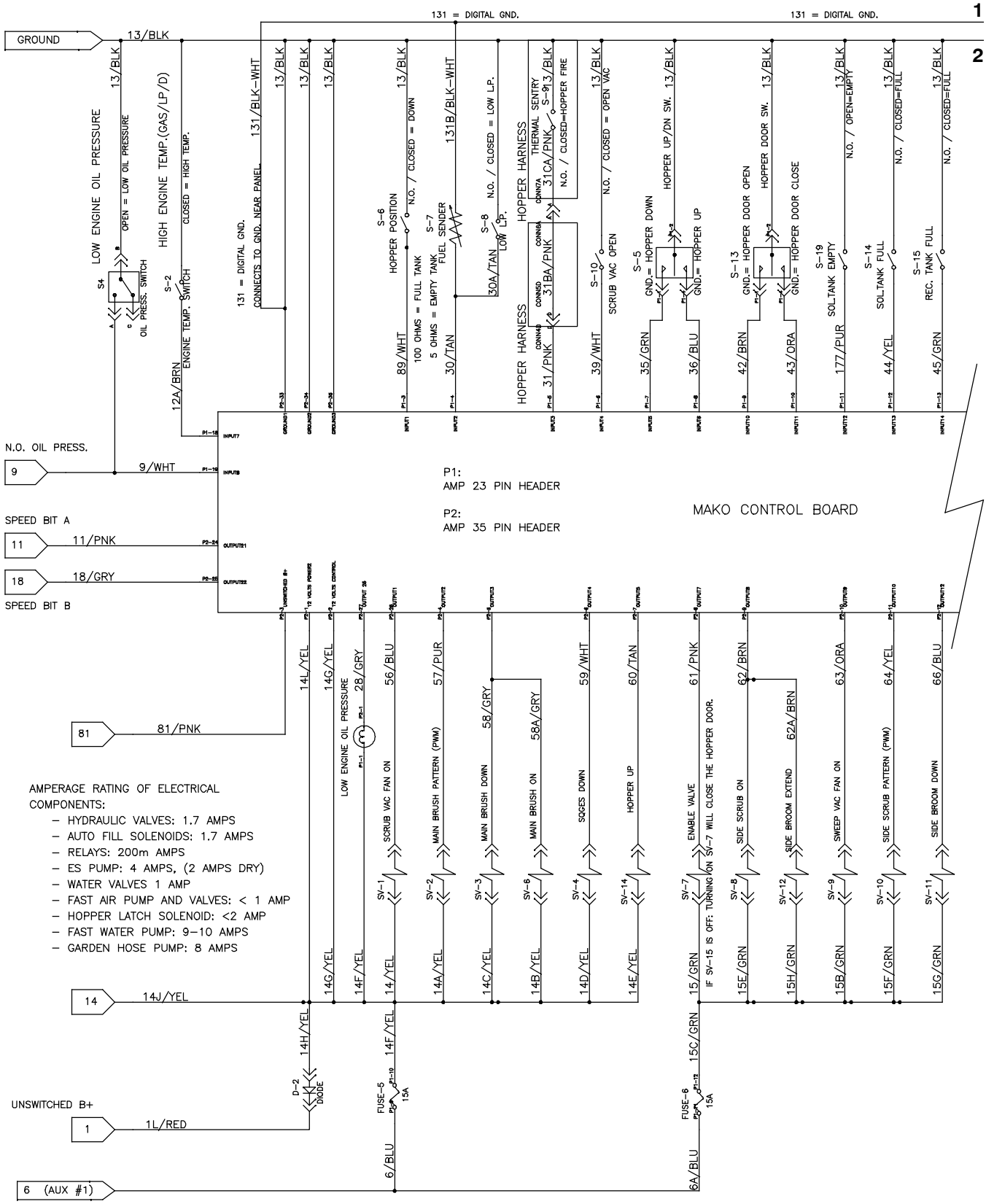

1033626 - 354727

Fig. 61 - Electrical Schematic, (000000-001544)

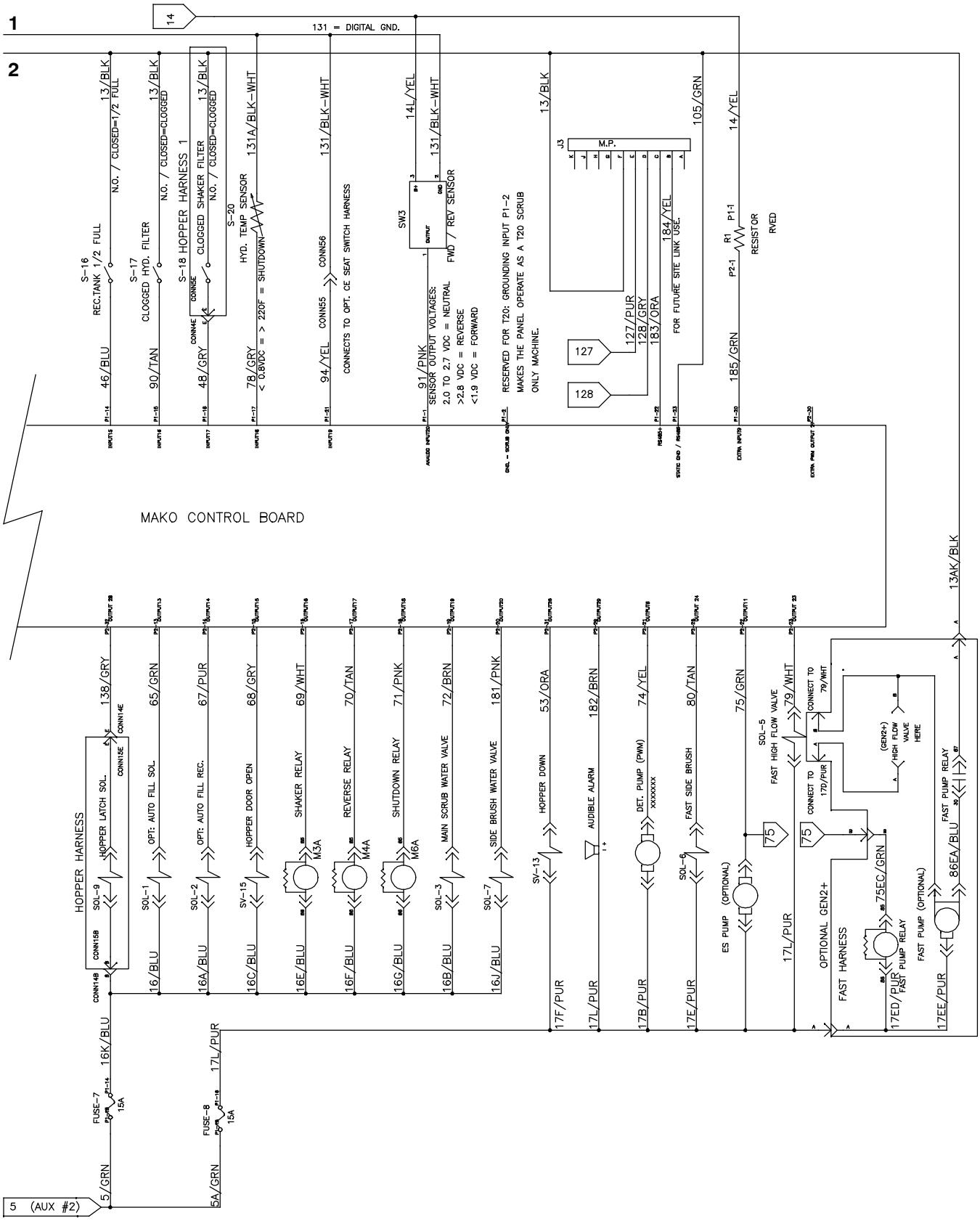

1033626 - 354727

Fig. 61 - Electrical Schematic, (000000-001544)

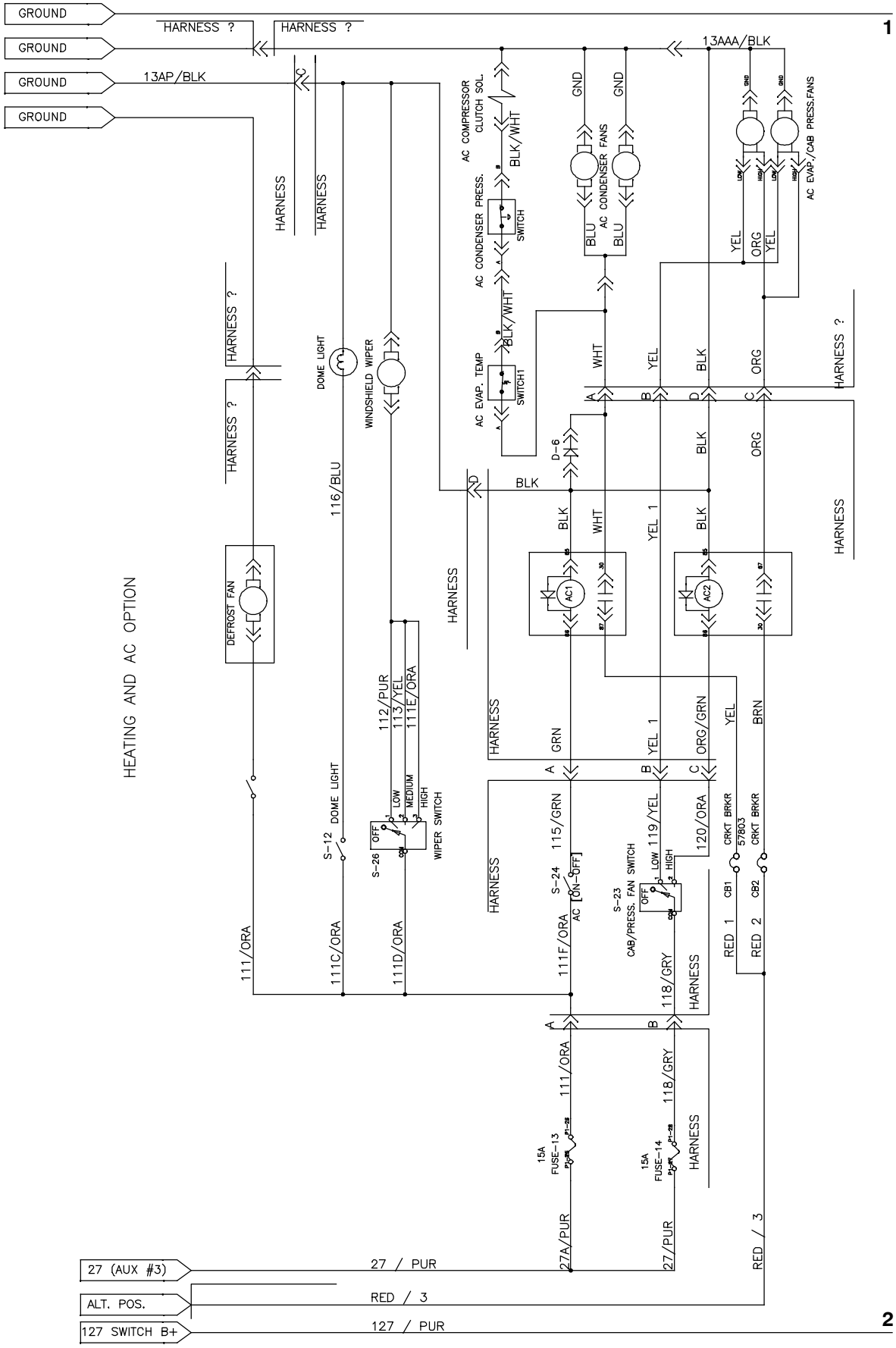

1033626 - 354727

Fig. 61 - Electrical Schematic, (000000-001544)

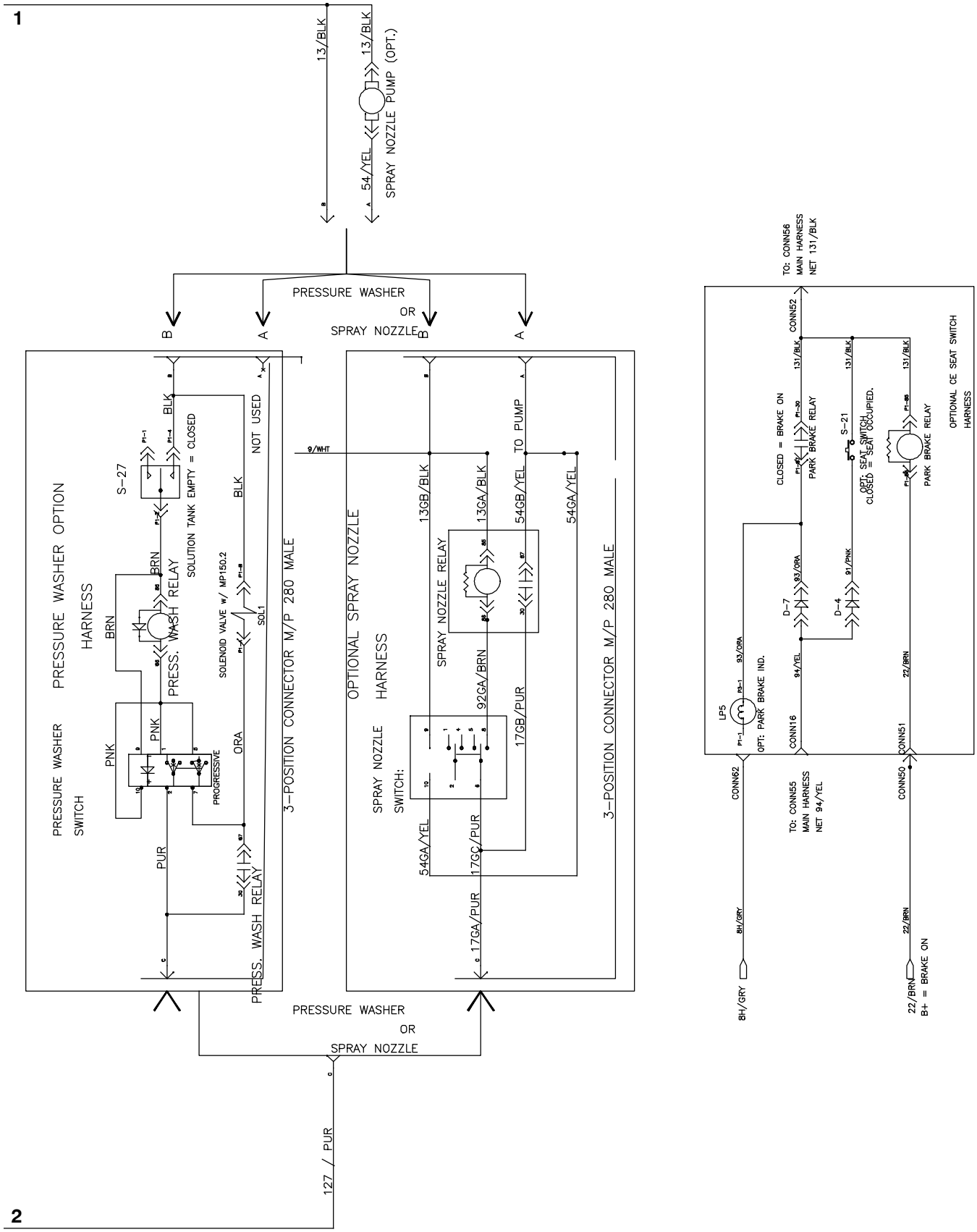

1033626 - 354727

Fig. 61 - Electrical Schematic, (000000-001544)

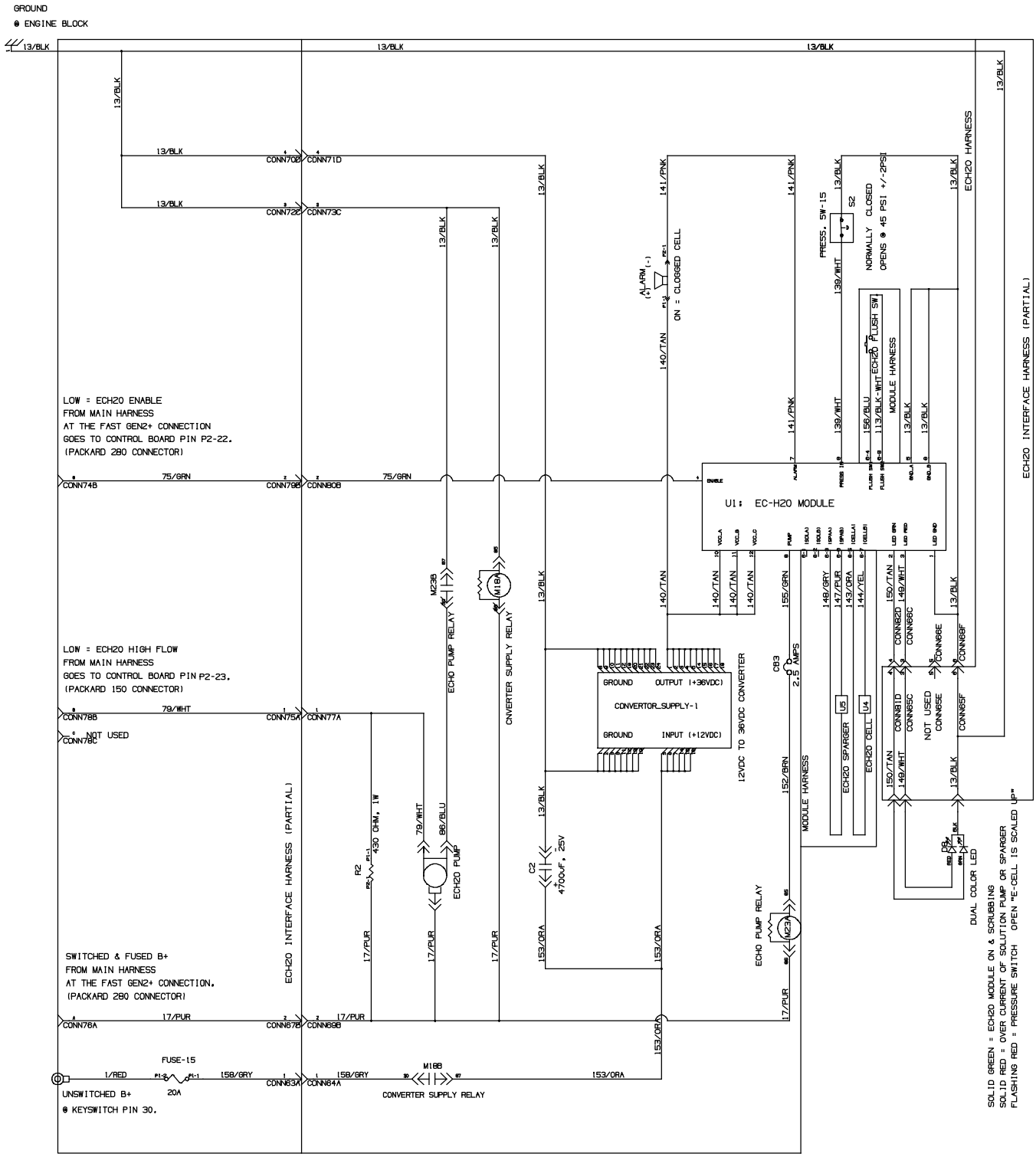

EC-H2O OPTION

1033626 - 354727

Fig. 62 - Electrical Schematic, (001545-003999)

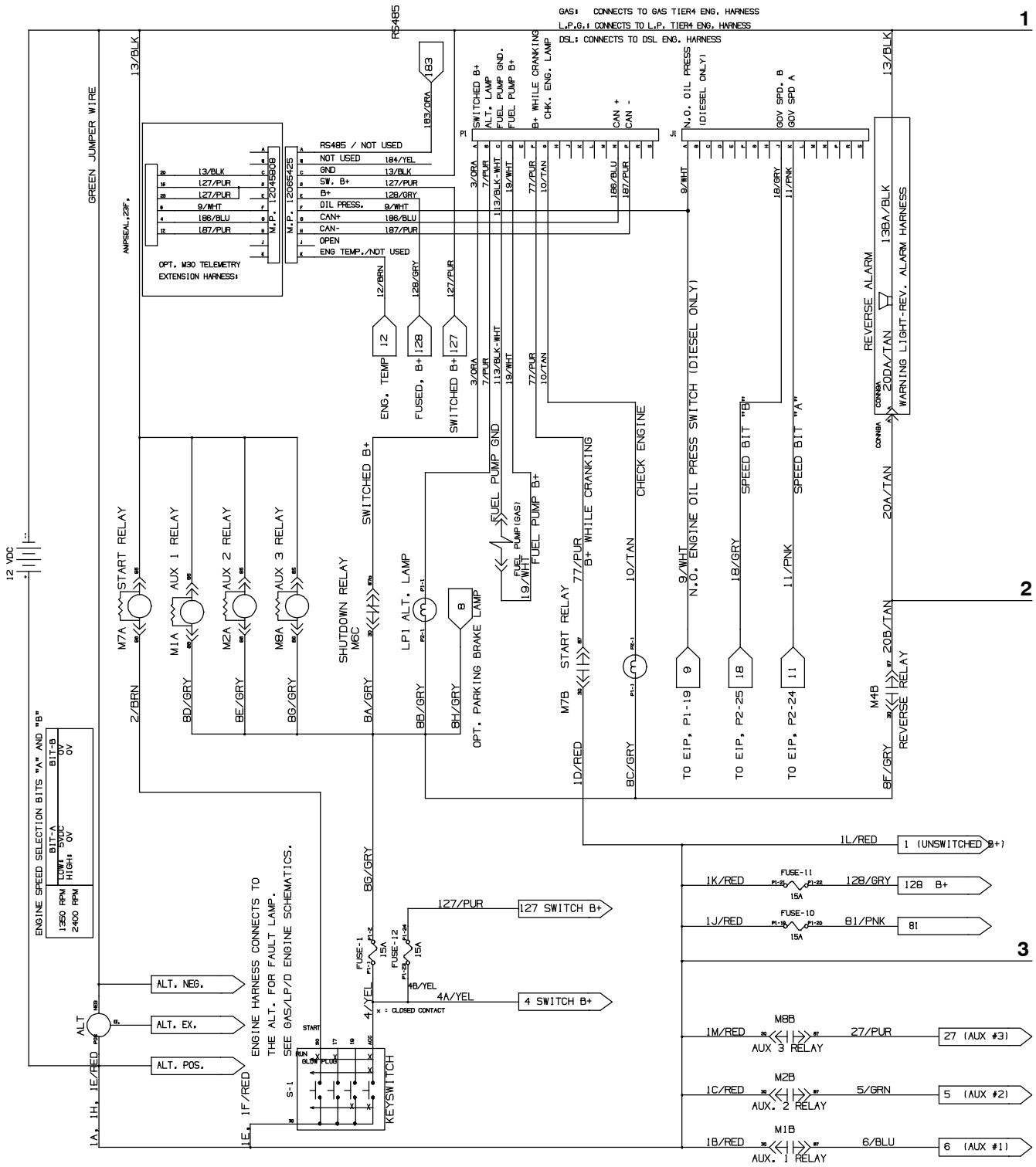

Fig. 62 - Electrical Schematic, (001545-003999)

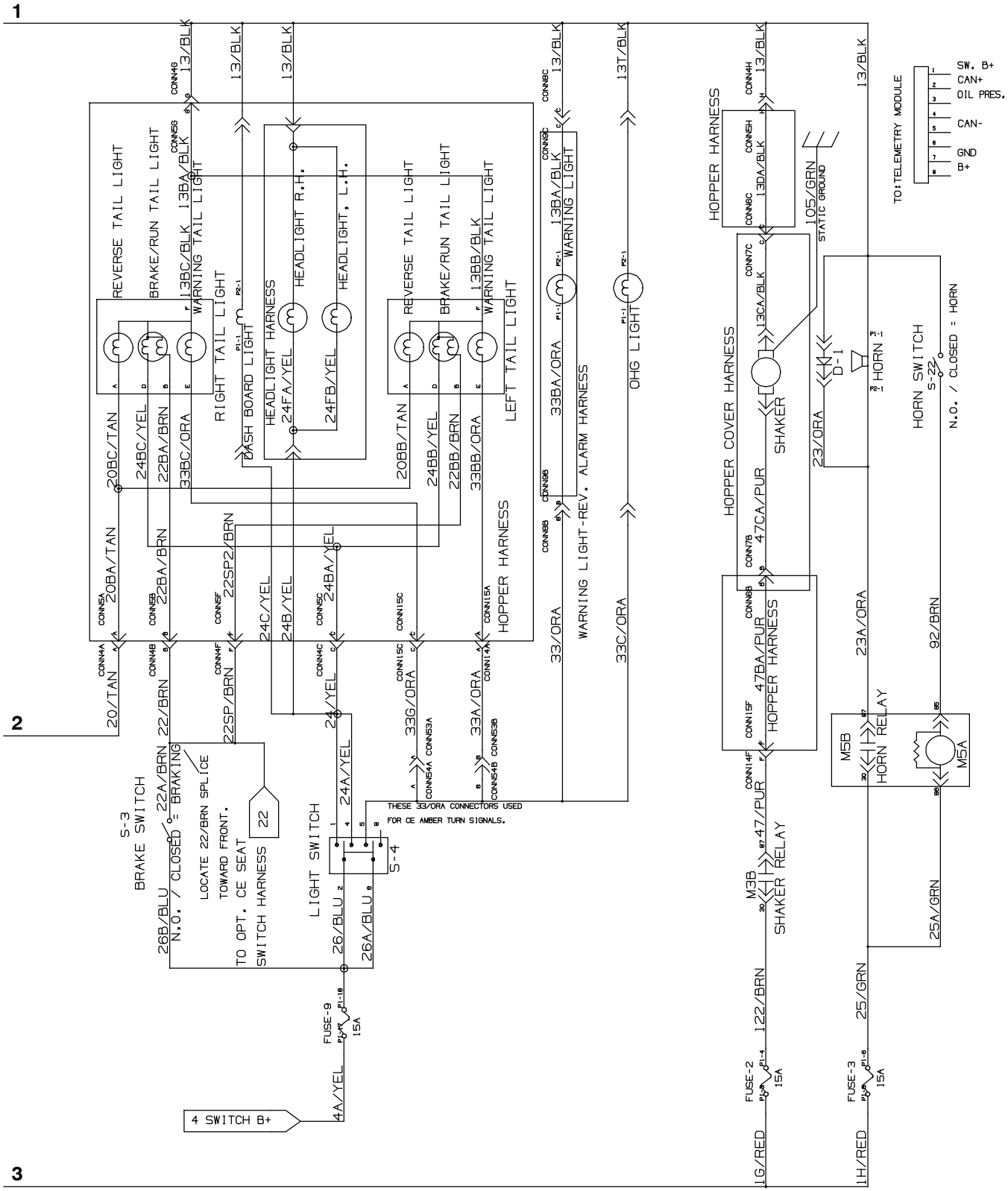

1033626 - 354727

Fig. 62 - Electrical Schematic, (001545-003999)

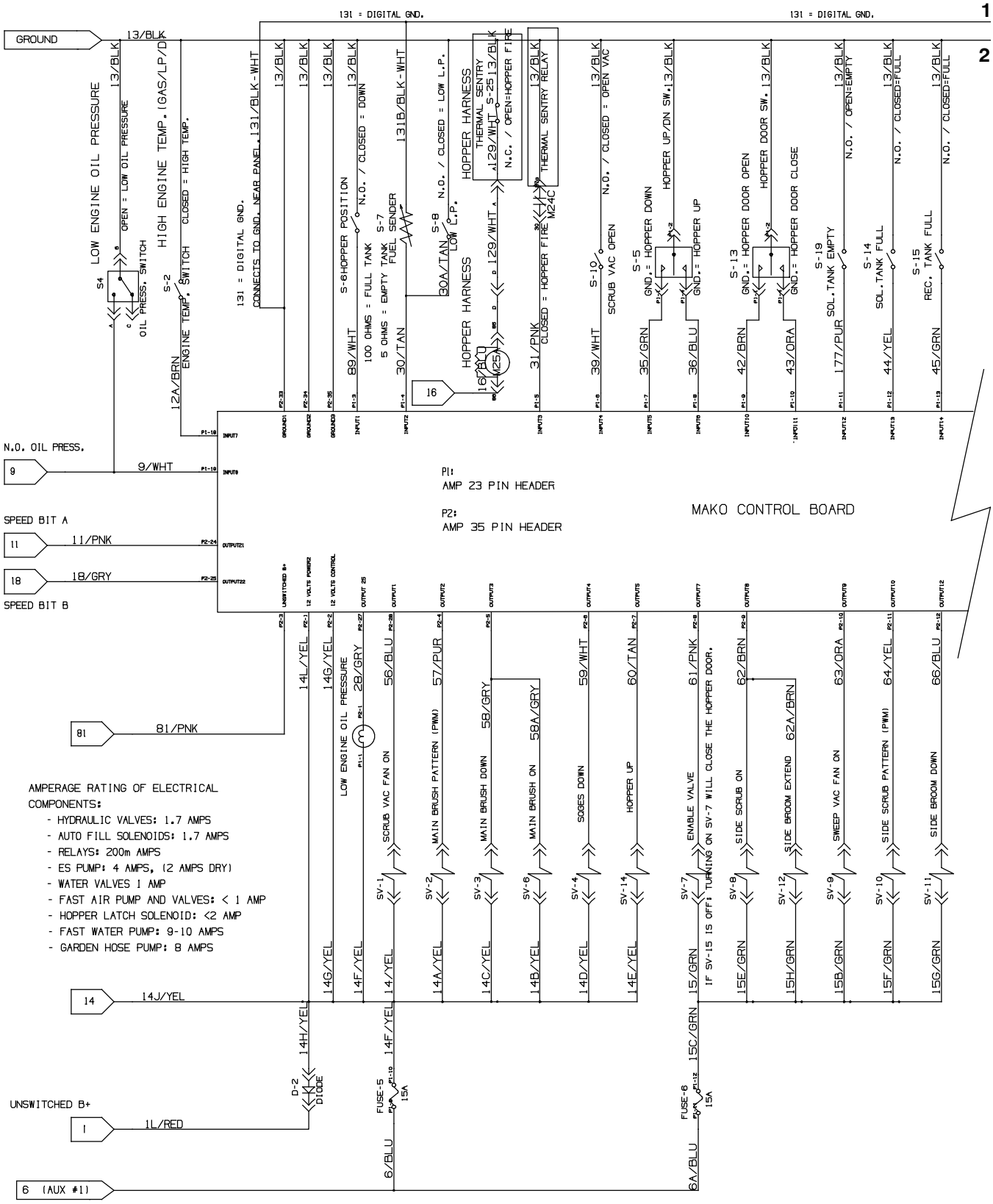

1033626 - 354727

Fig. 62 - Electrical Schematic, (001545-003999)

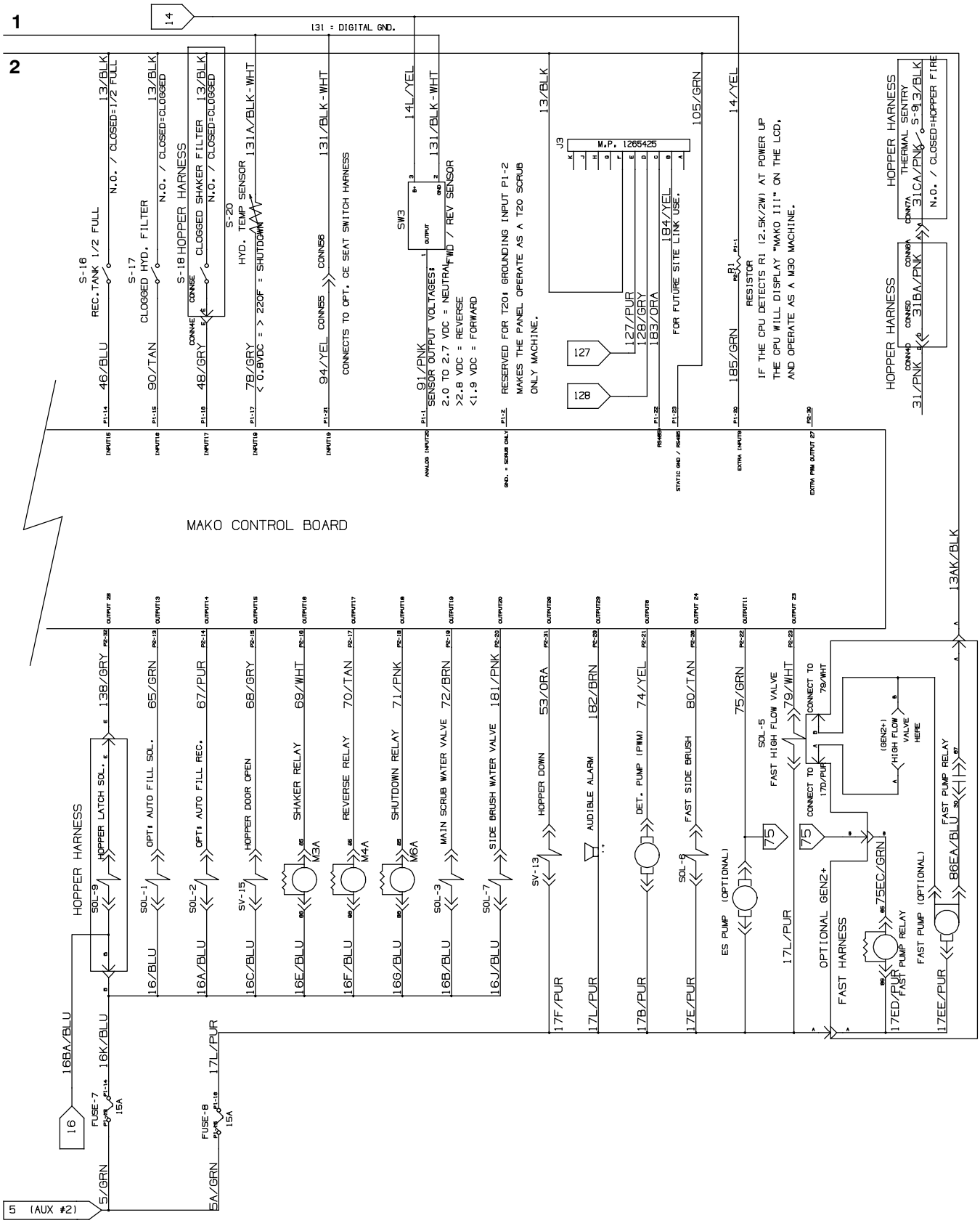

1033626 - 354727

Fig. 62 - Electrical Schematic, (001545-003999)

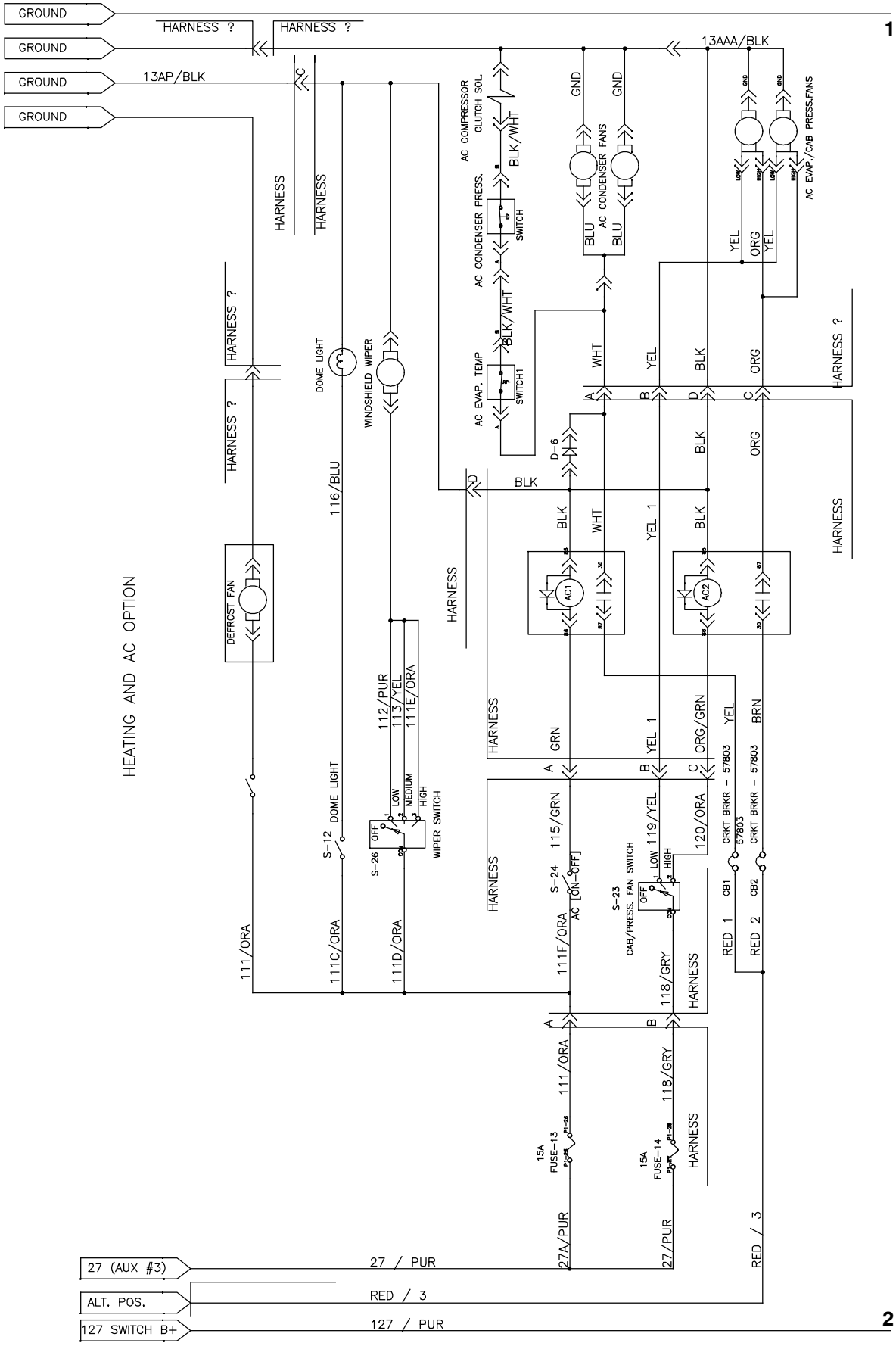

1033626 - 354727

Fig. 62 - Electrical Schematic, (001545-003999)

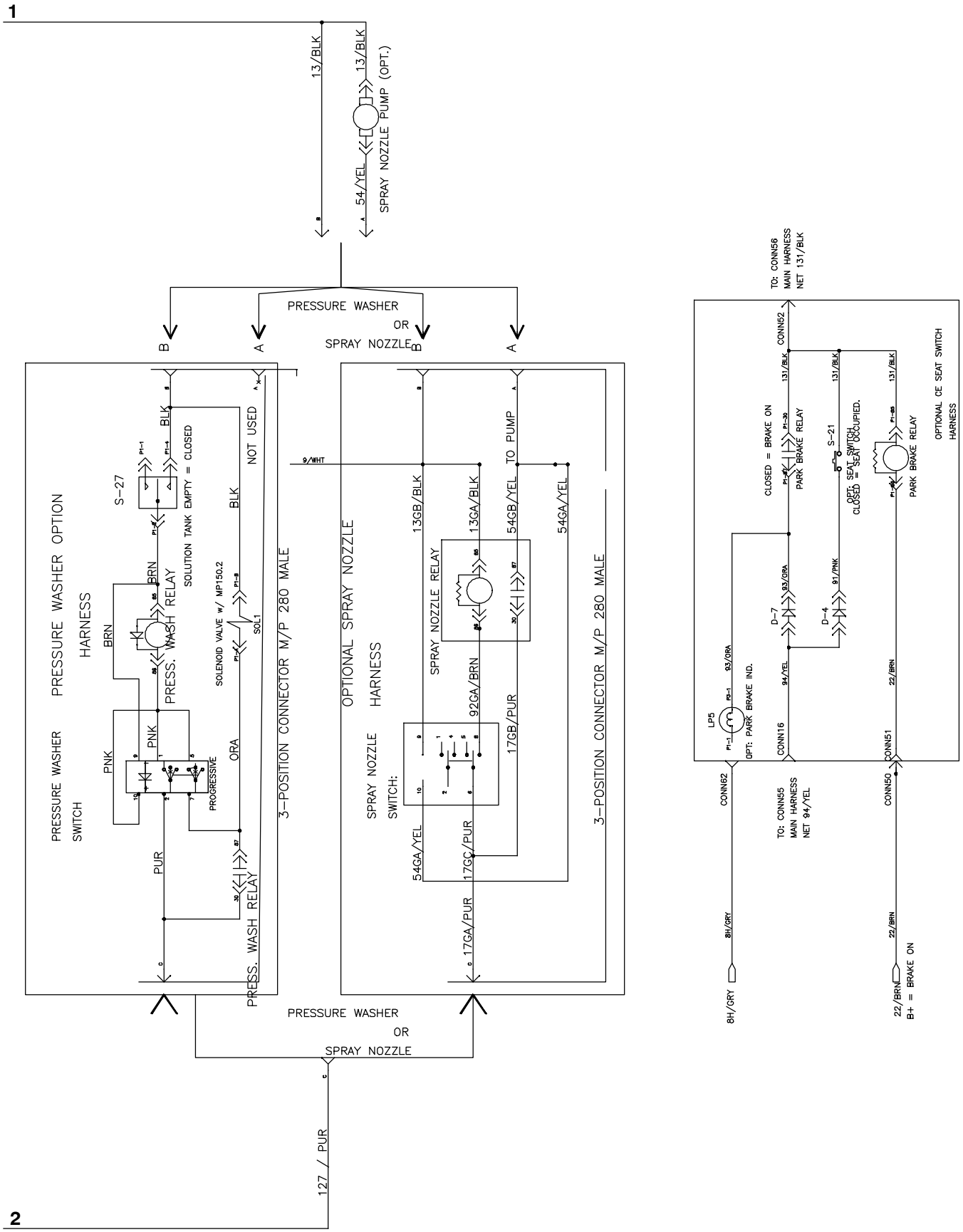

1033626 - 354727

Fig. 62 - Electrical Schematic, (001545-003999)

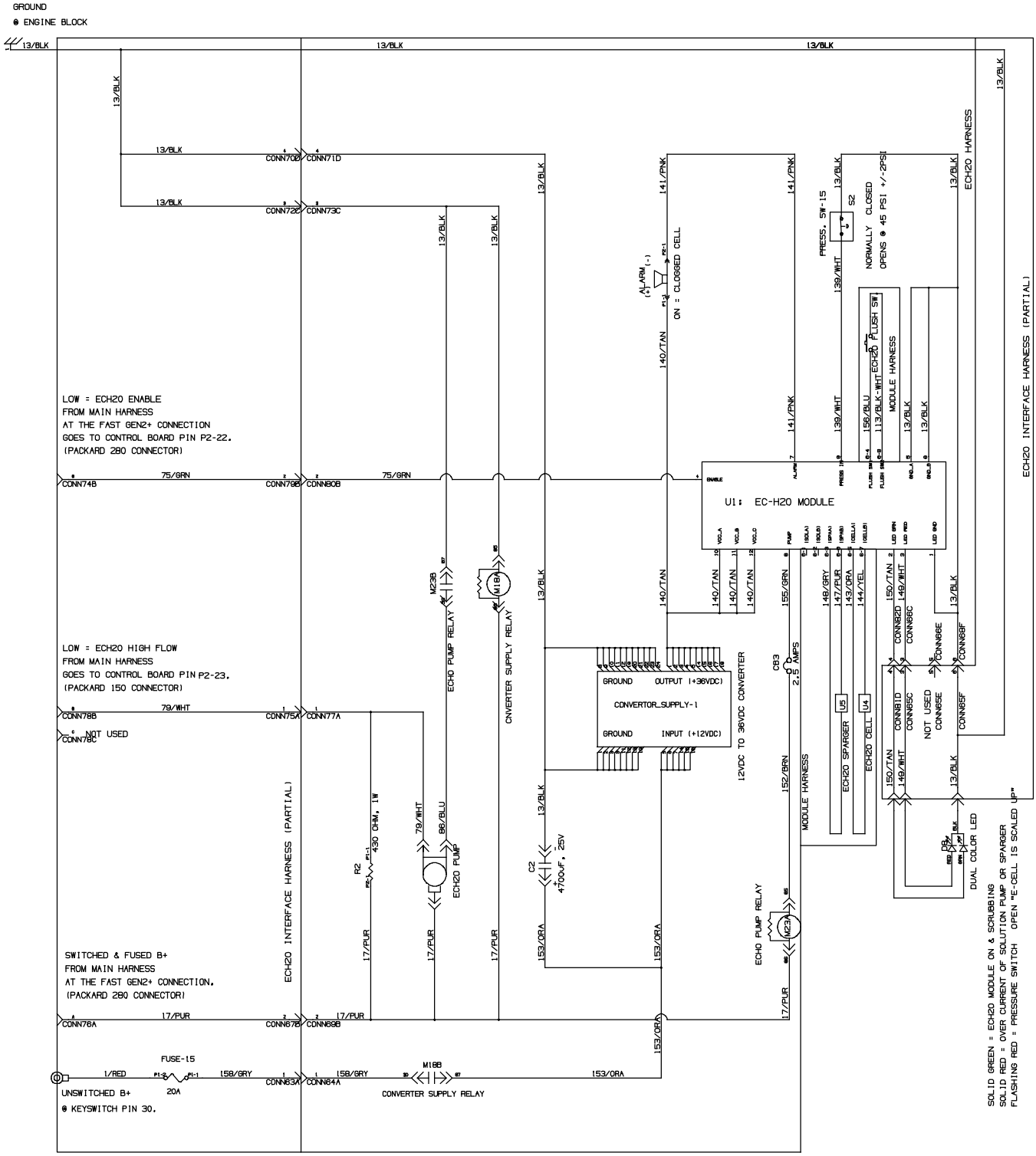

EC-H2O OPTION

1033626 - 354727

Fig. 63 - Electrical Schematic, (004000-)

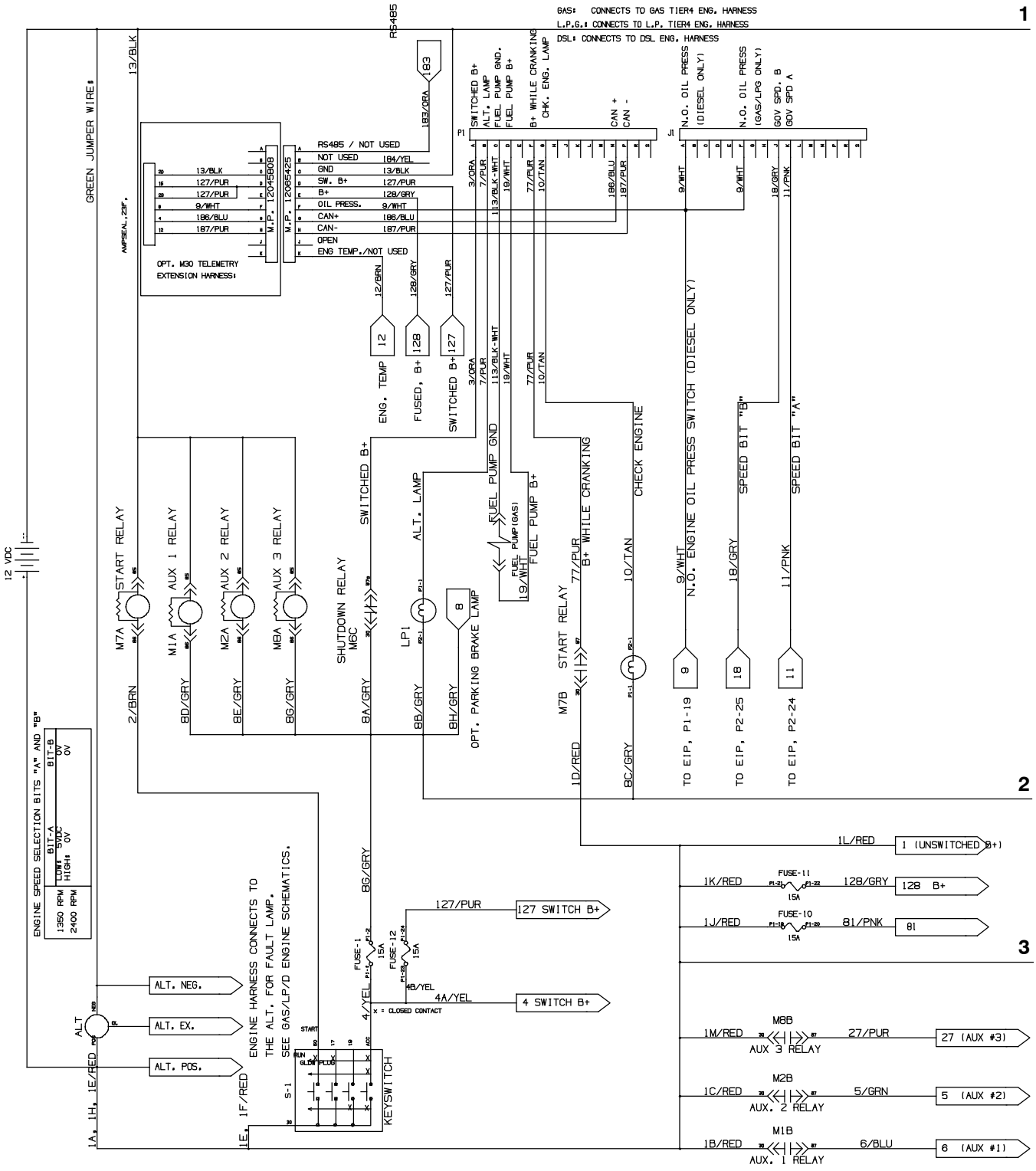

1033626 - 354727

Fig. 63 - Electrical Schematic, (004000-)

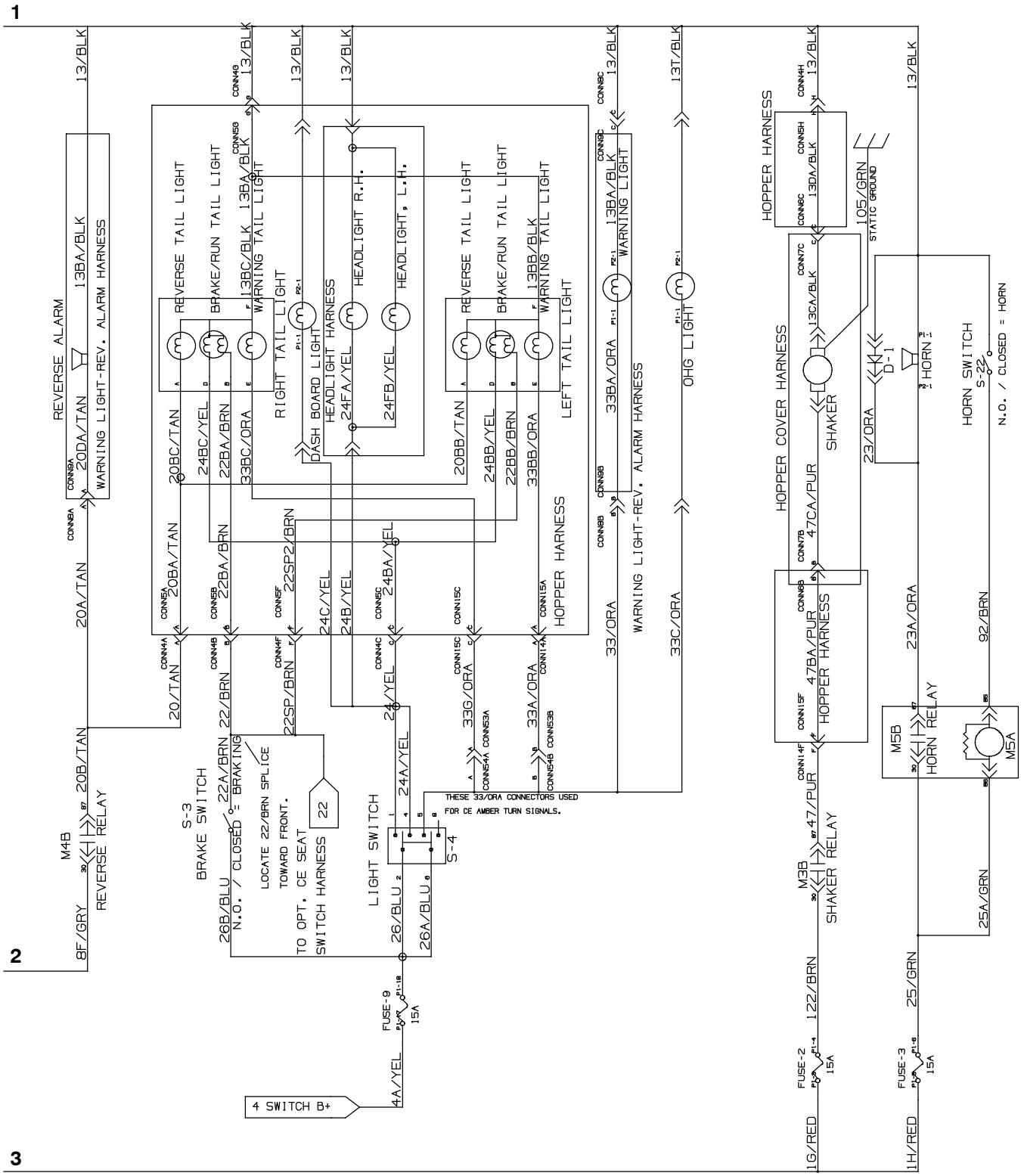

1033626 - 354727

Fig. 63 - Electrical Schematic, (004000-)

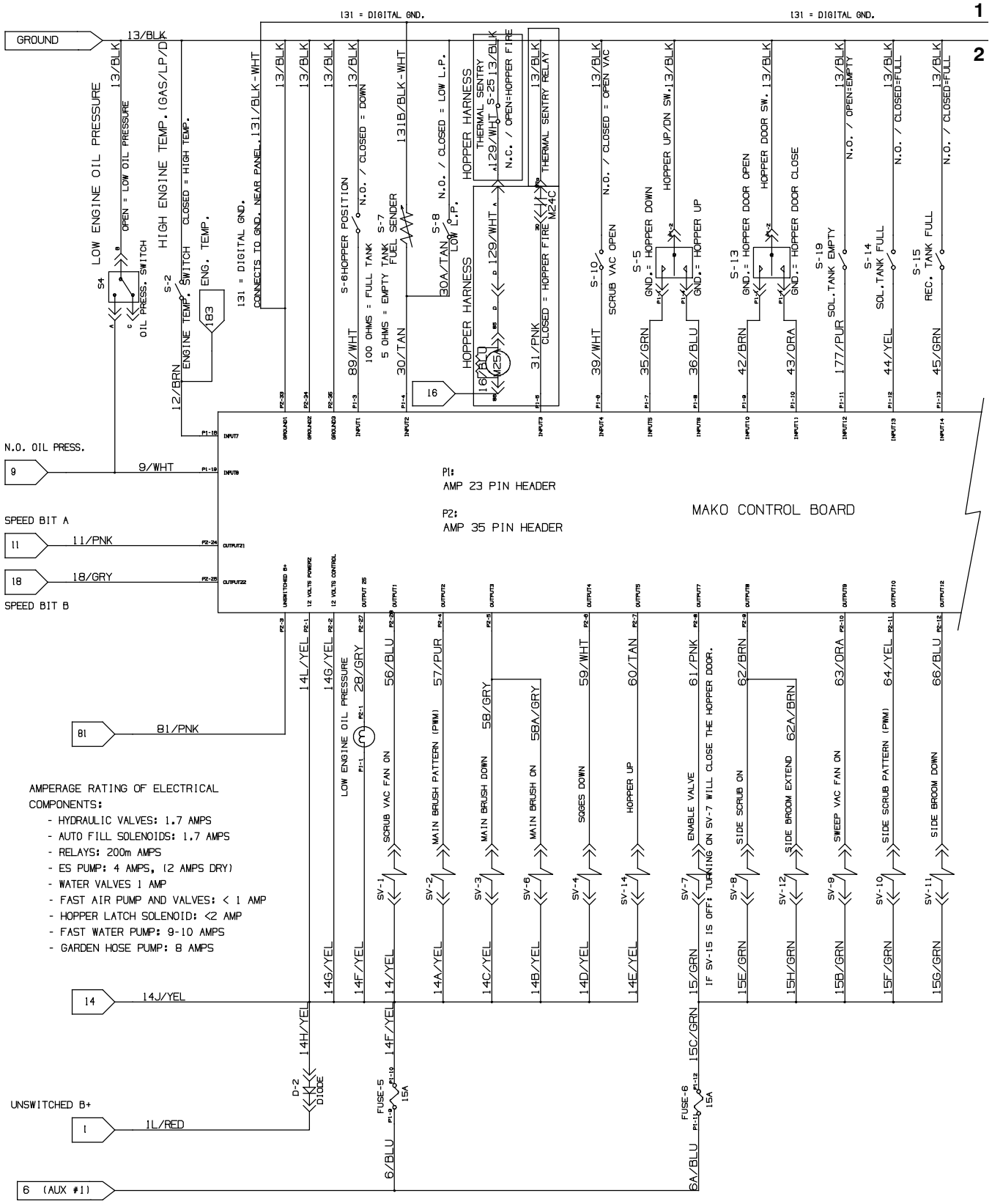

1033626 - 354727

Fig. 63 - Electrical Schematic, (004000-)

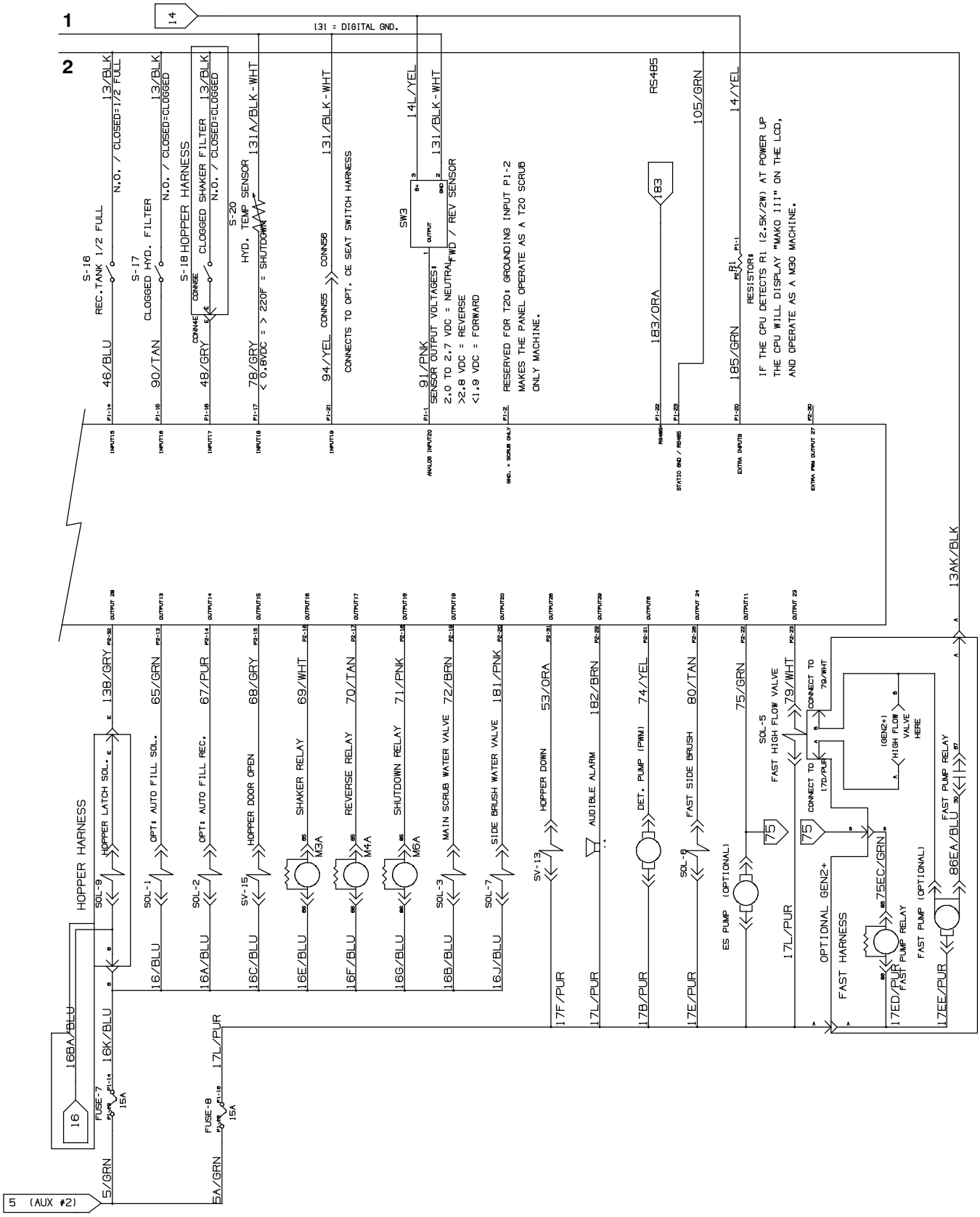

1033626 - 354727

Fig. 63 - Electrical Schematic, (004000-)

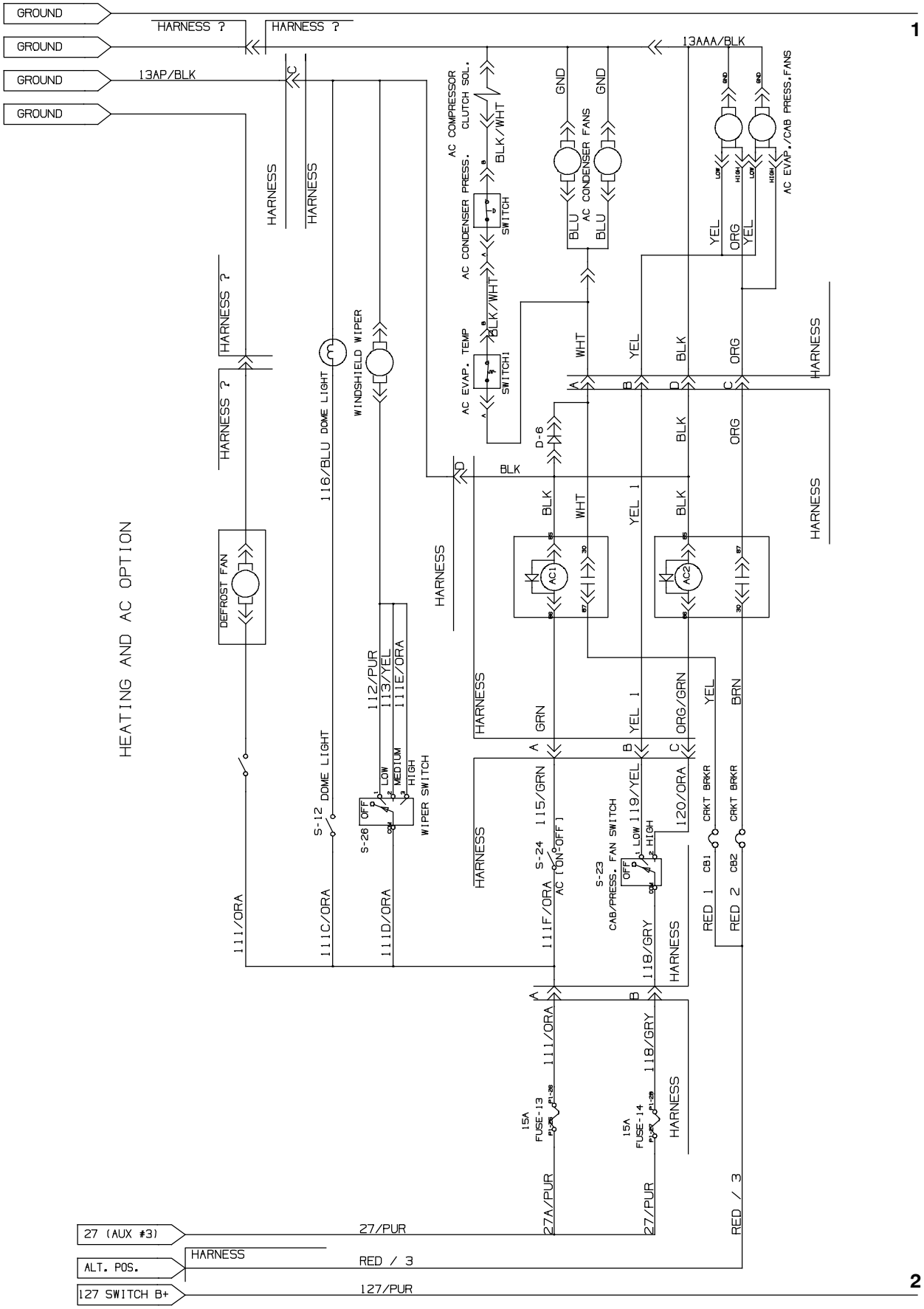

1033626 - 354727

Fig. 63 - Electrical Schematic, (004000-)

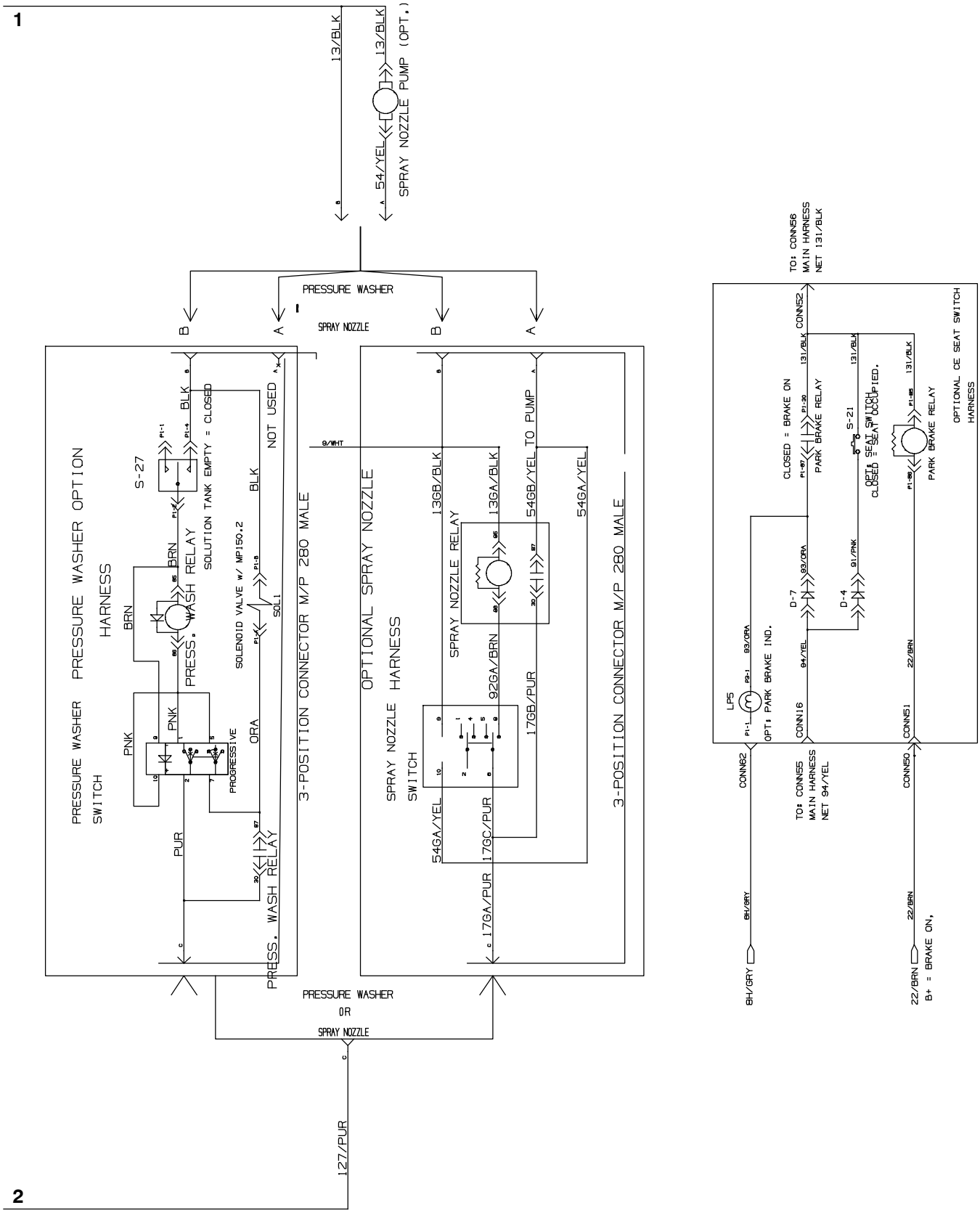

1033626 - 354727

Fig. 63 - Electrical Schematic, (004000-)

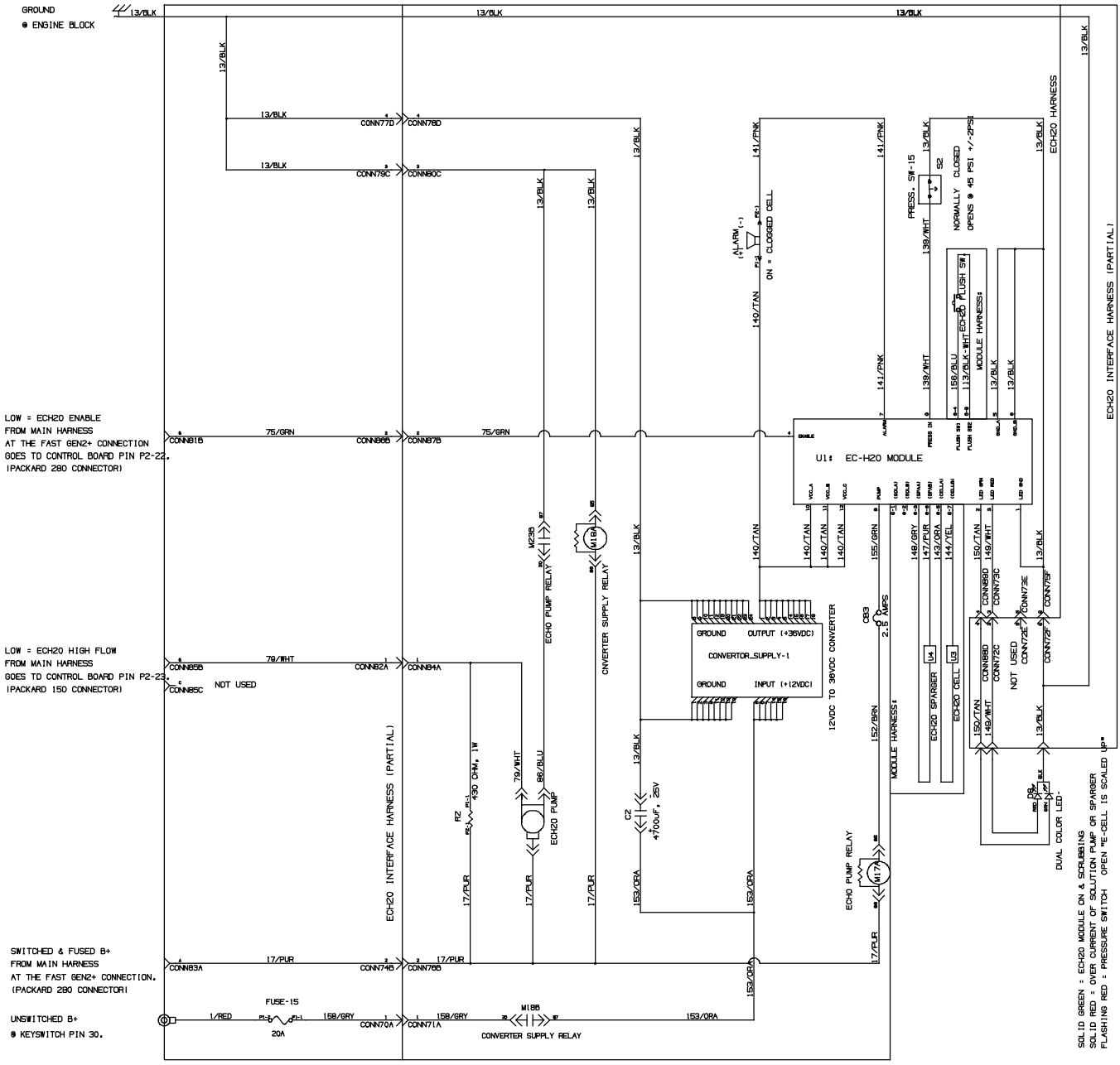

EC-H2O OPTION

1033626 - 354727

Fig. 64 - Electrical Schematic, Diesel Engine Harness

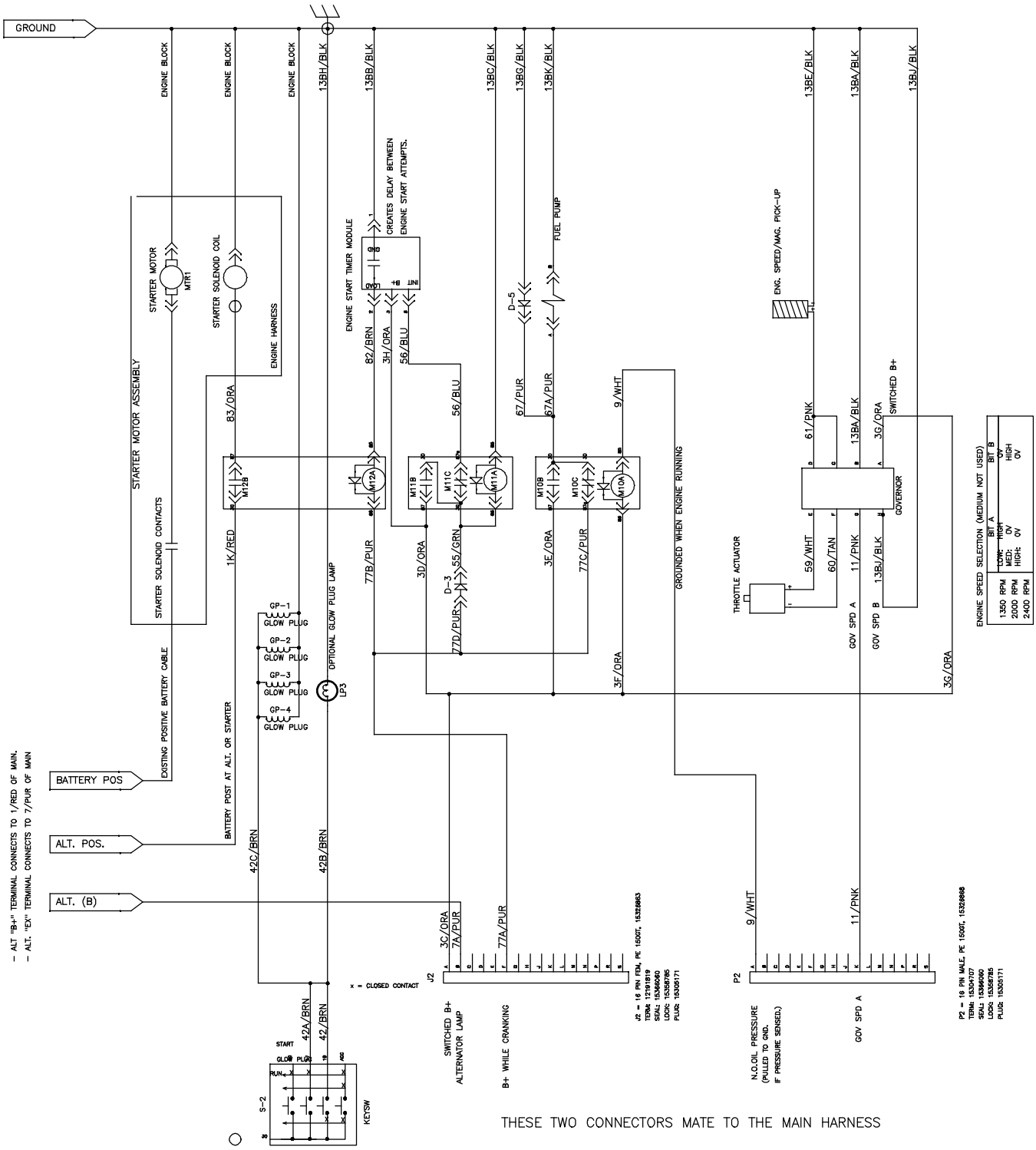

1033626 - 354727

Fig. 65 - Electrical Wire Harness Group, Main

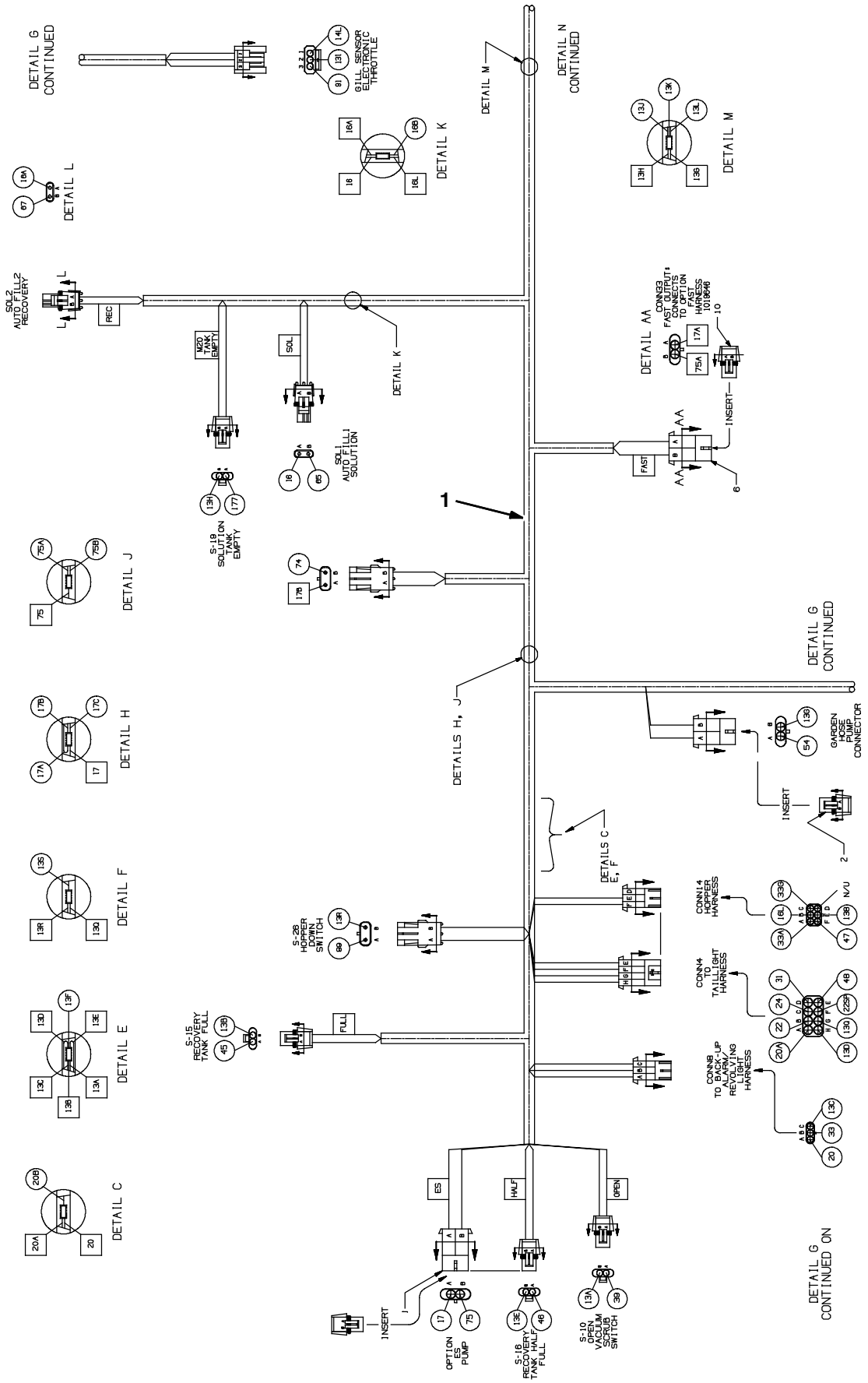

1033623 - 354716

Fig. 65 - Electrical Wire Harness Group, Main

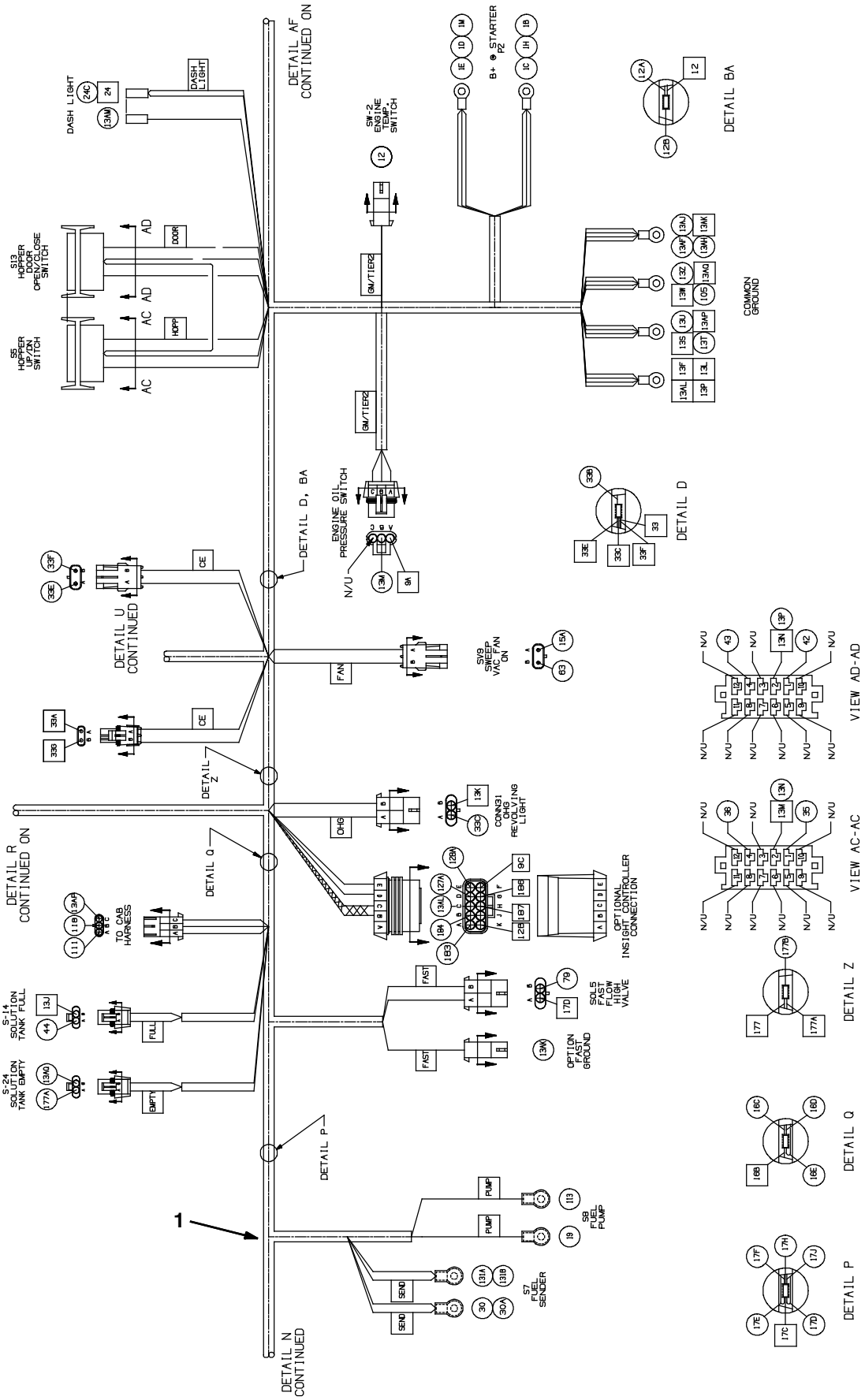

1033623 - 354716

Fig. 65 - Electrical Wire Harness Group, Main

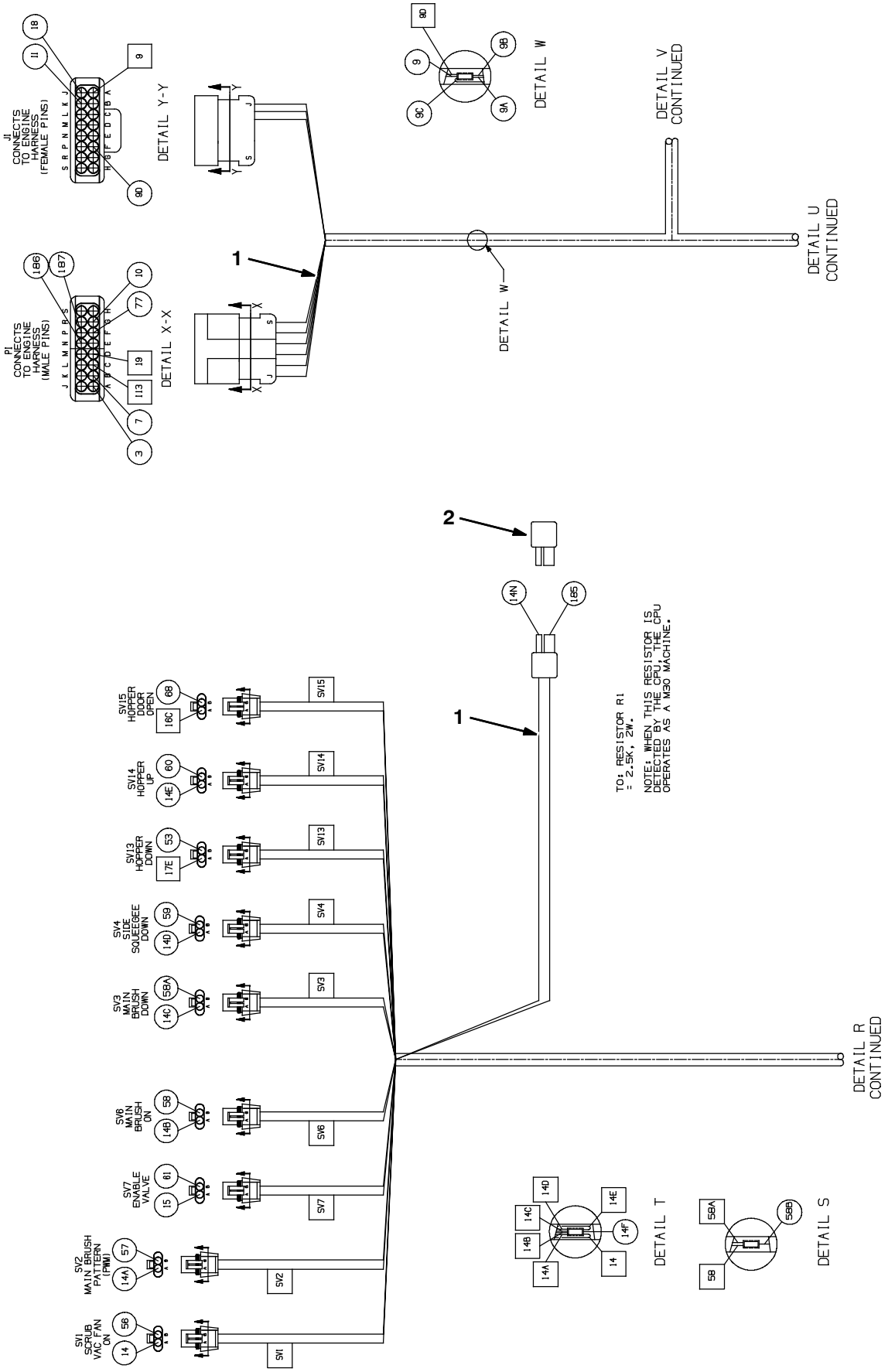

1033623 - 354716

Fig. 65 - Electrical Wire Harness Group, Main

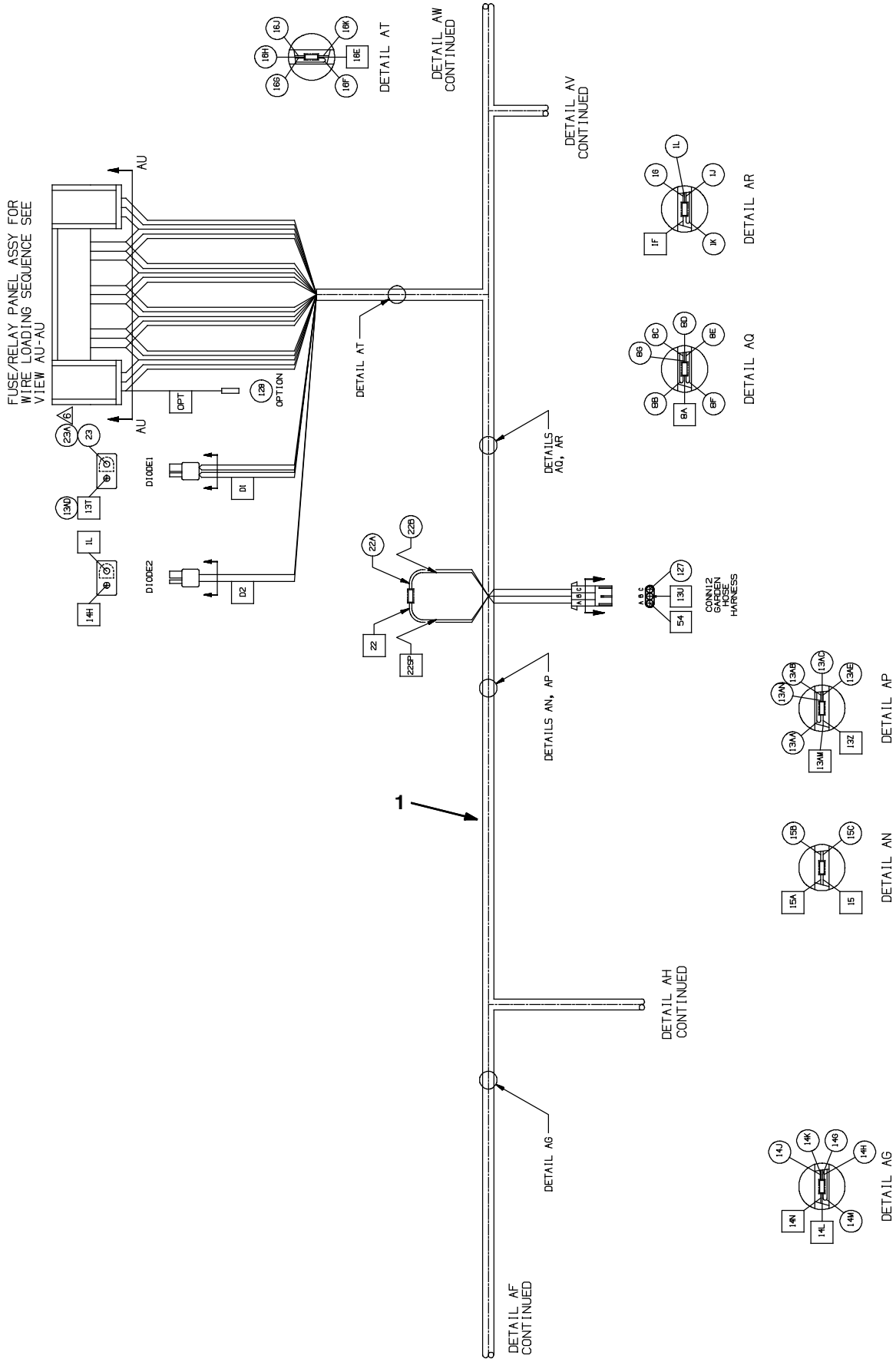

1033623 - 354716

Fig. 65 - Electrical Wire Harness Group, Main

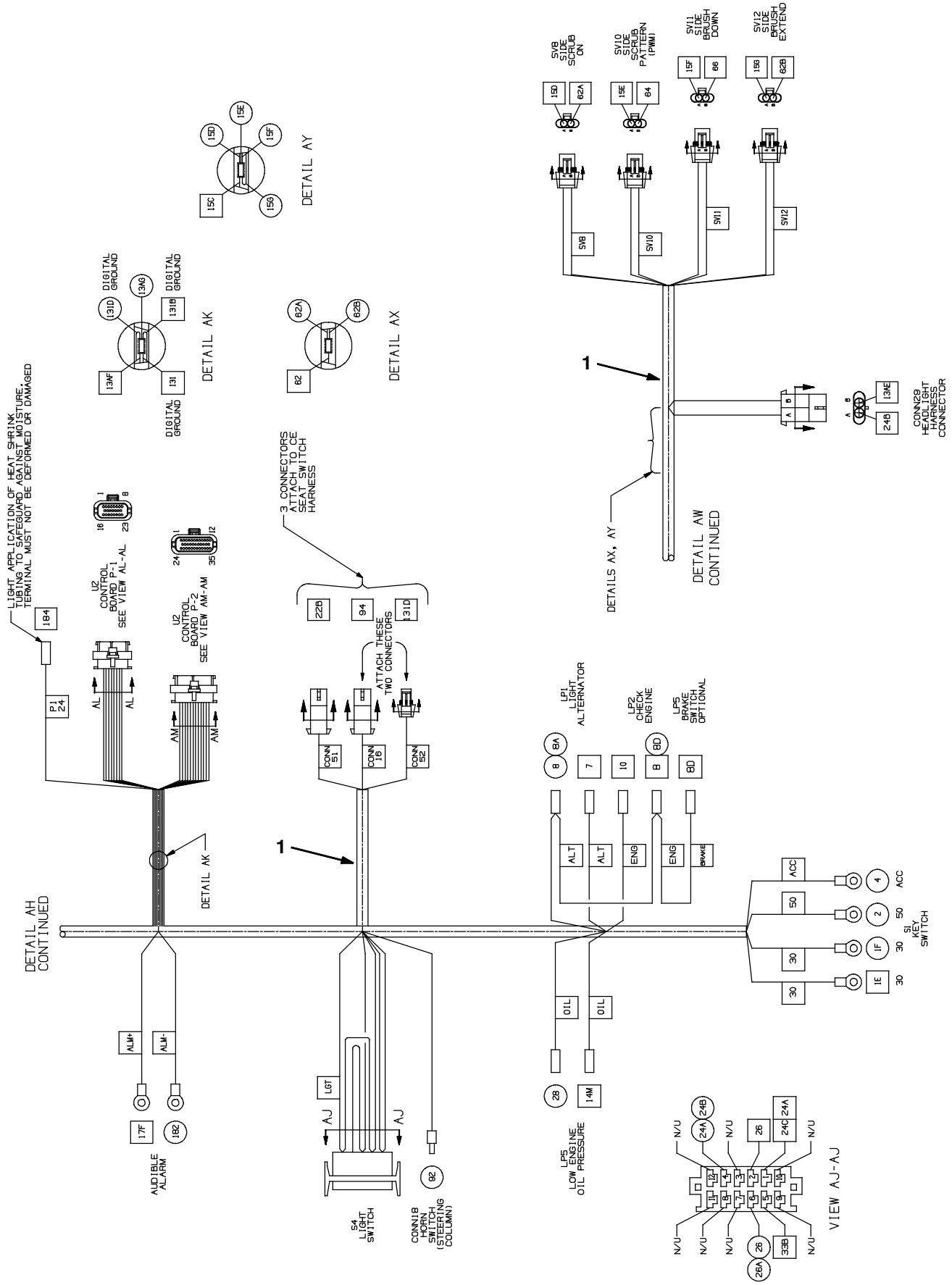

1033623 - 354716

Fig. 65 - Electrical Wire Harness Group, Main

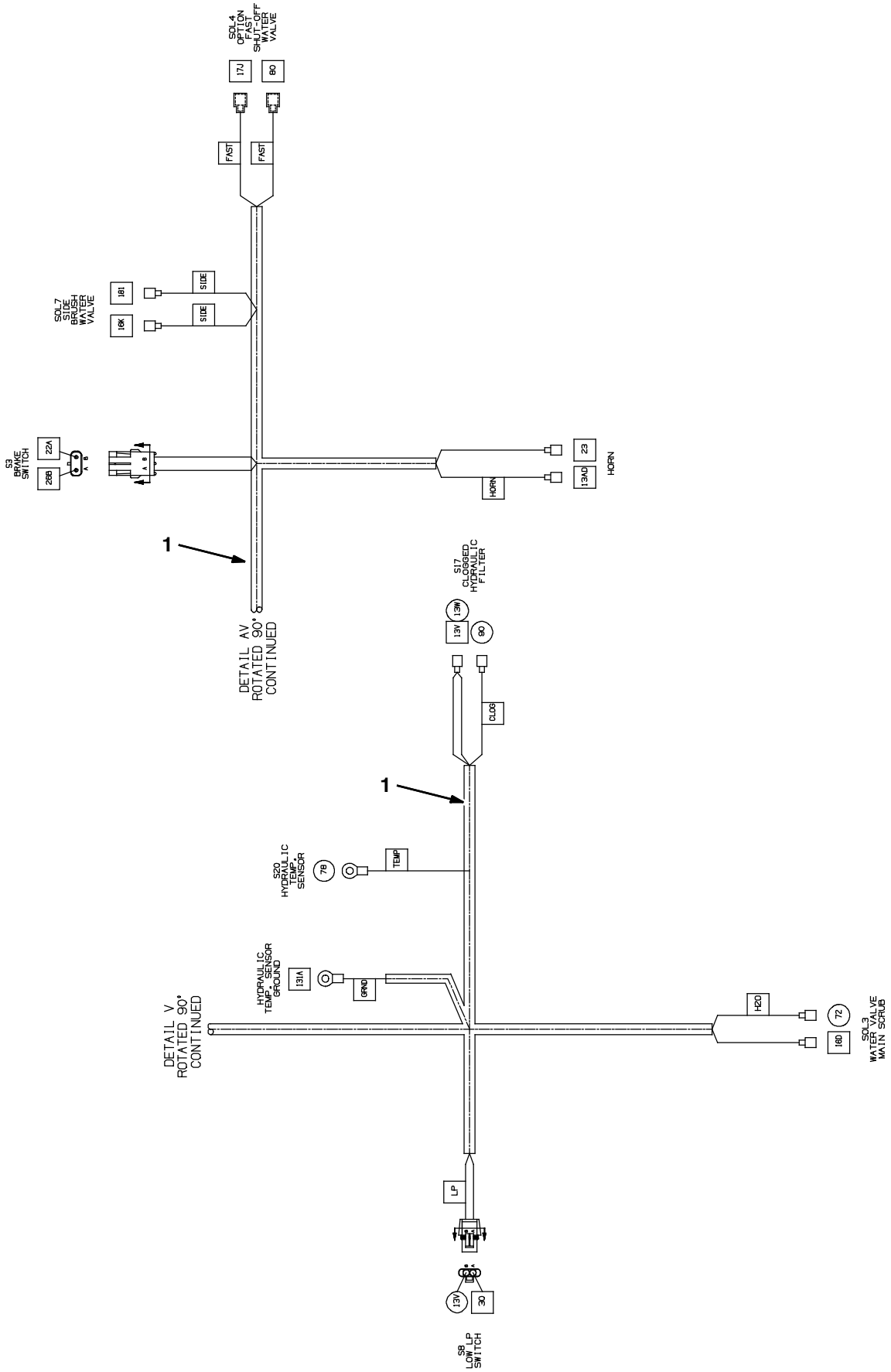

1033623 - 354716

Fig. 65 - Electrical Wire Harness Group, Main

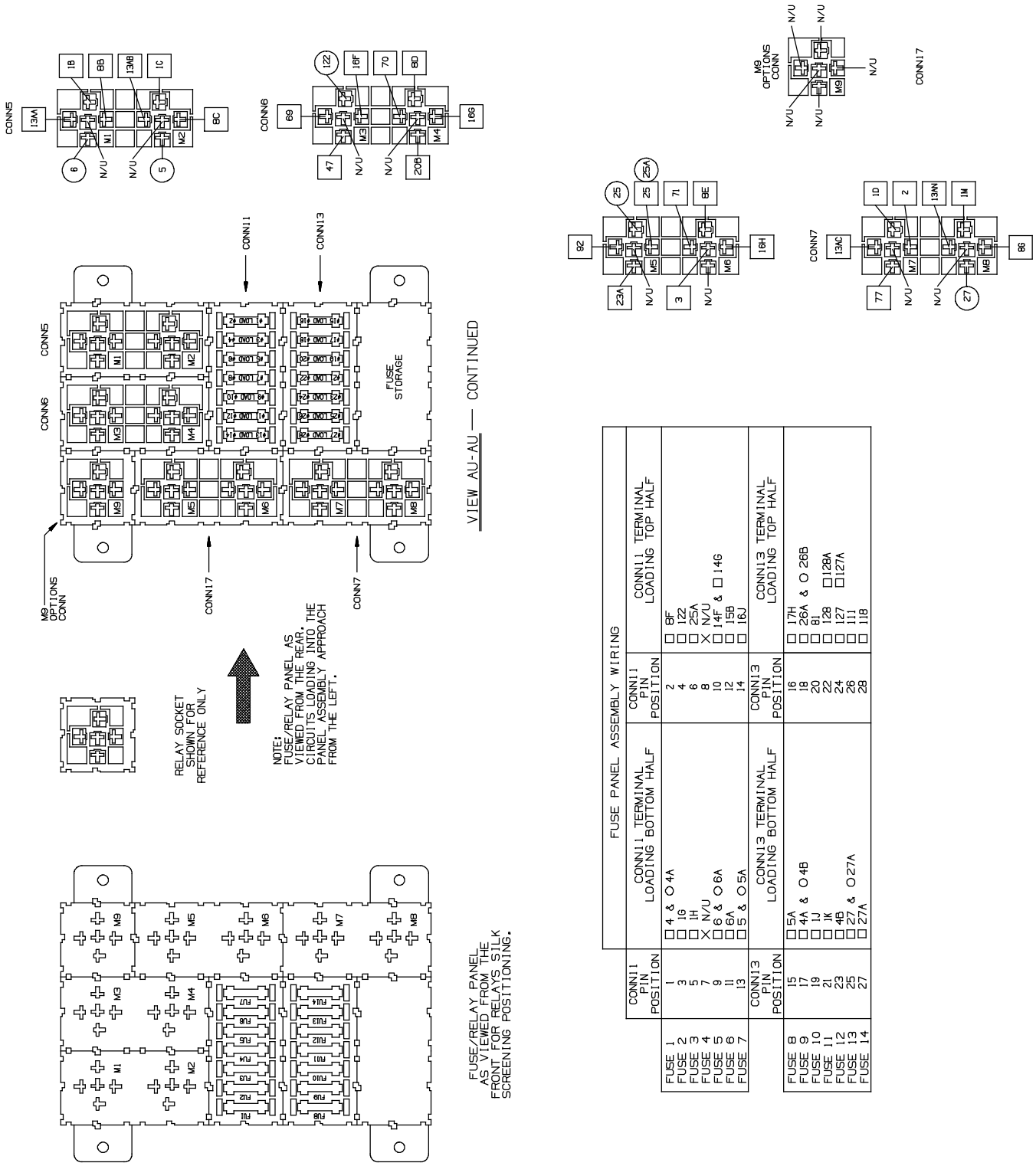

1033623 - 354716

Ref.	Part No.	Serial Number	Description	Qty.
1	1071895	(000000-)	Harness, Main [M30]	1
2	1058988	(000000-)	Resistor, Ele, Plug [2.5K , 1W]	1

Fig. 66 - Electrical Wire Harness Group, Headlight

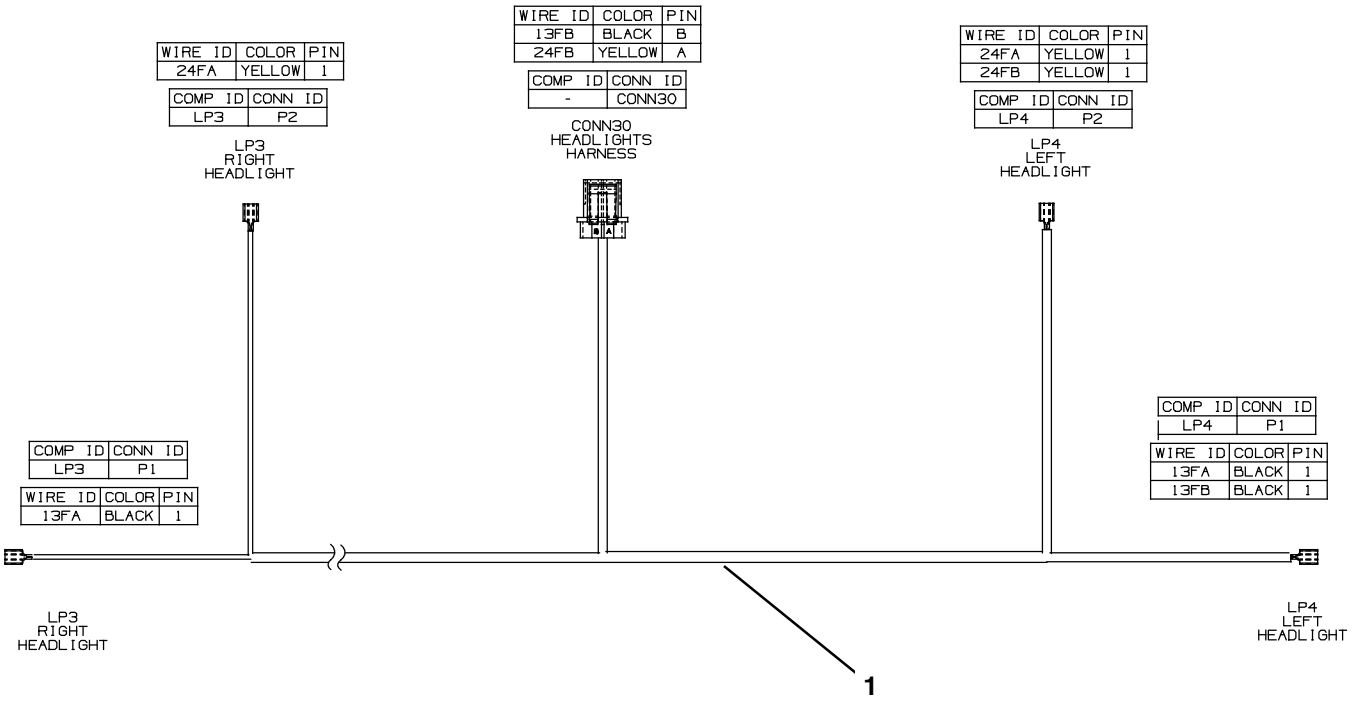

354716

Ref.	Part No.	Serial Number	Description	Qty.
1	1024141	(000000-)	Harness, Headlight	1

Fig. 67 - Electrical Wire Harness Group, Hopper

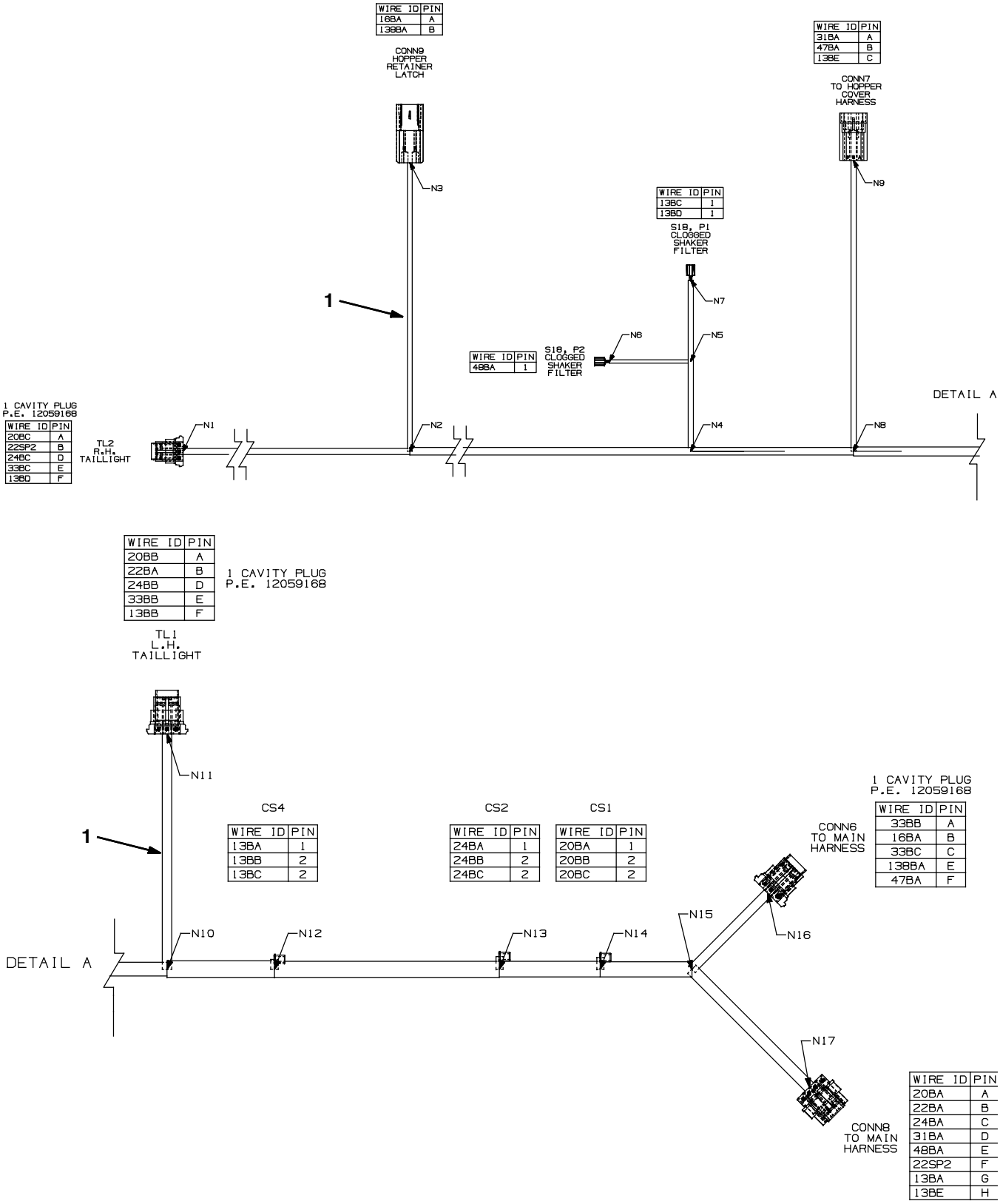

WIRE ID	PIN
16BA	A
138BA	B

WIRE ID	PIN
31BA	A
47BA	B
13BE	C

WIRE ID	PIN
13BC	1
13BD	1

WIRE ID	PIN
48BA	1

WIRE ID	PIN
20BC	A
22SP2	B
24BC	D
33BC	E
13BD	F

WIRE ID	PIN
20BB	A
22BA	B
24BB	D
33BB	E
13BB	F

WIRE ID	PIN
13BA	1
13BB	2
13BC	2

WIRE ID	PIN
24BA	1
24BB	2
24BC	2

WIRE ID	PIN
20BA	1
20BB	2
20BC	2

WIRE ID	PIN
33BB	A
16BA	B
33BC	C
138BA	E
47BA	F

WIRE ID	PIN
20BA	A
22BA	B
24BA	C
31BA	D
48BA	E
22SP2	F
13BA	G
13BE	H

Fig. 67 - Electrical Wire Harness Group, Hopper

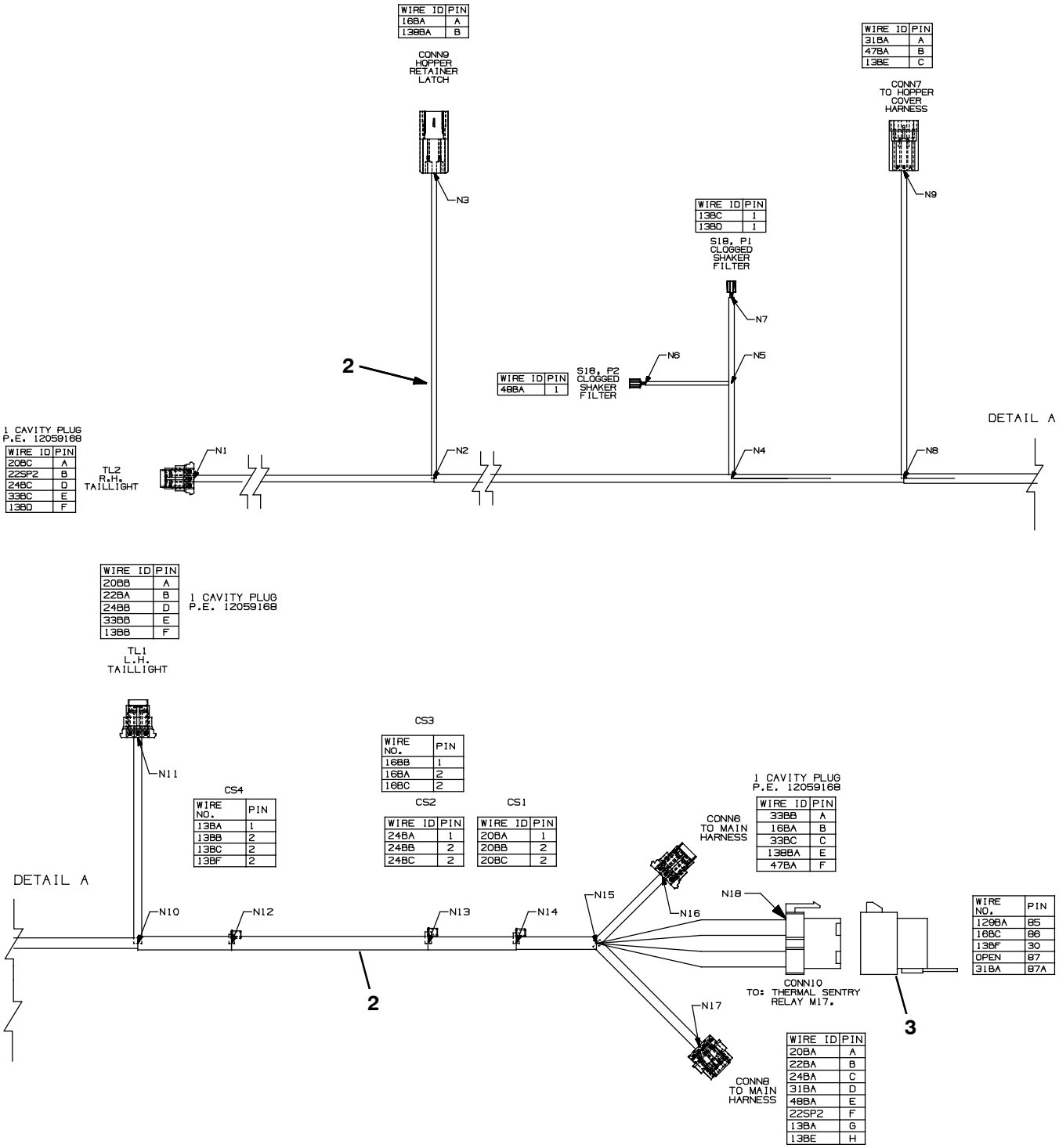

356253 - M20, M30

Ref.	Part No.	Serial Number	Description	Qty.
1	1033624	(000000- 001544)	Harness, Hppr [M20/M30]	1
2	1064371	(001545-)	Harness, Hppr [M20/M30]	1
3	56186	(001545-)	Relay, 12vdc, 040a, Spdt No	1

Fig. 68 - Electrical Wire Harness Group, Hopper Cover

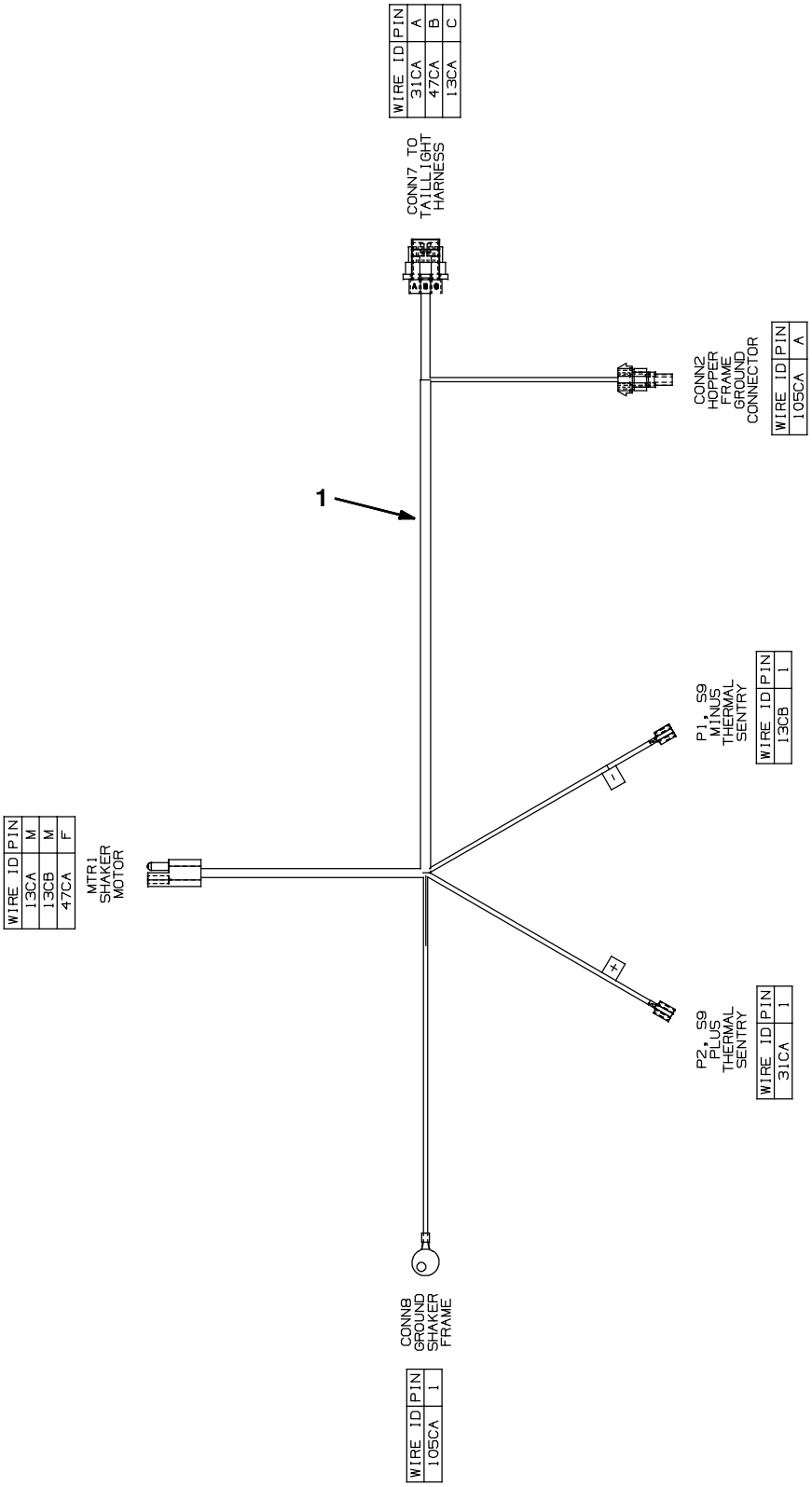

Fig. 68 - Electrical Wire Harness Group, Hopper Cover

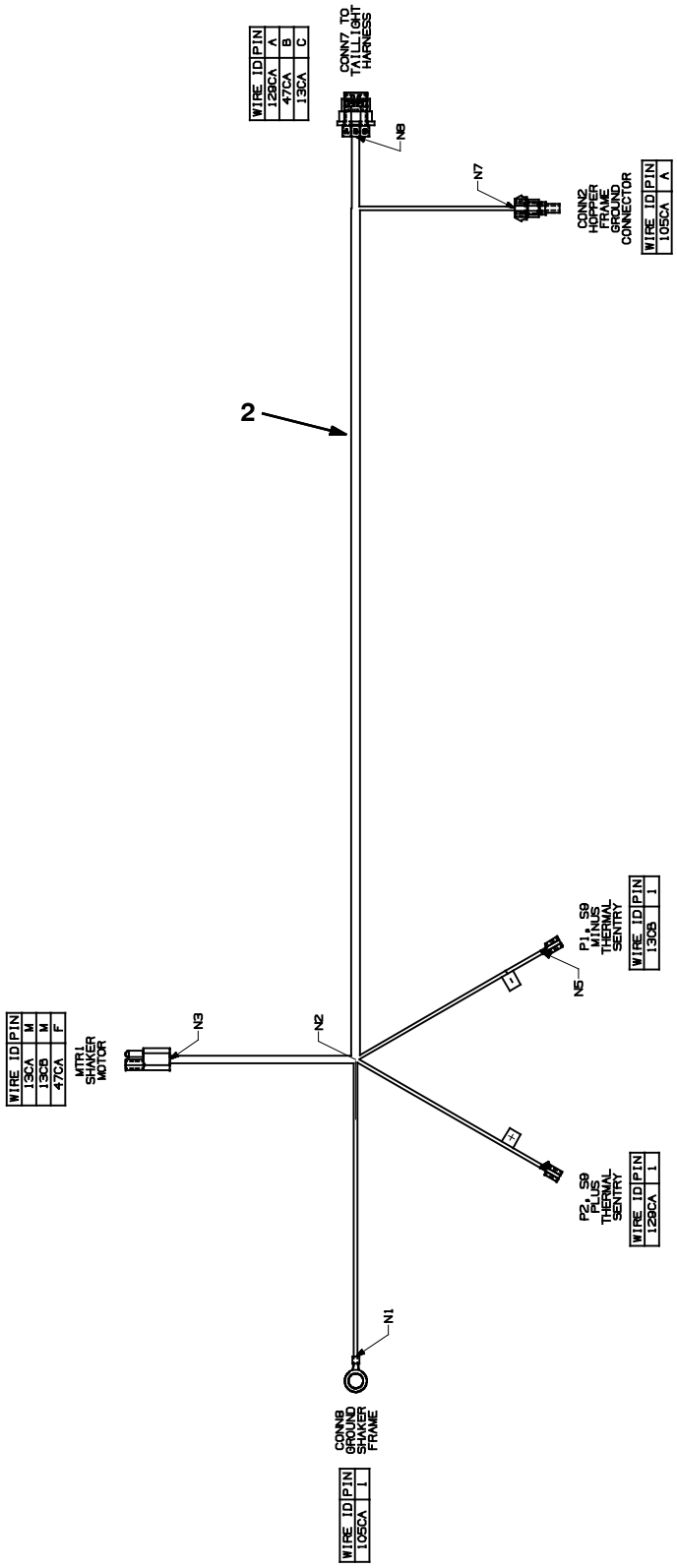

354389- 354459

Ref.	Part No.	Serial Number	Description	Qty.
1	1019950	(000000- 001544)	Harness, Hppr, Cover [M20]	1
2	1064370	(001545-)	Harness, Hppr, Cover [M20]	1

Fig. 69 - Electrical Wire Harnesses Group, Diesel Engine

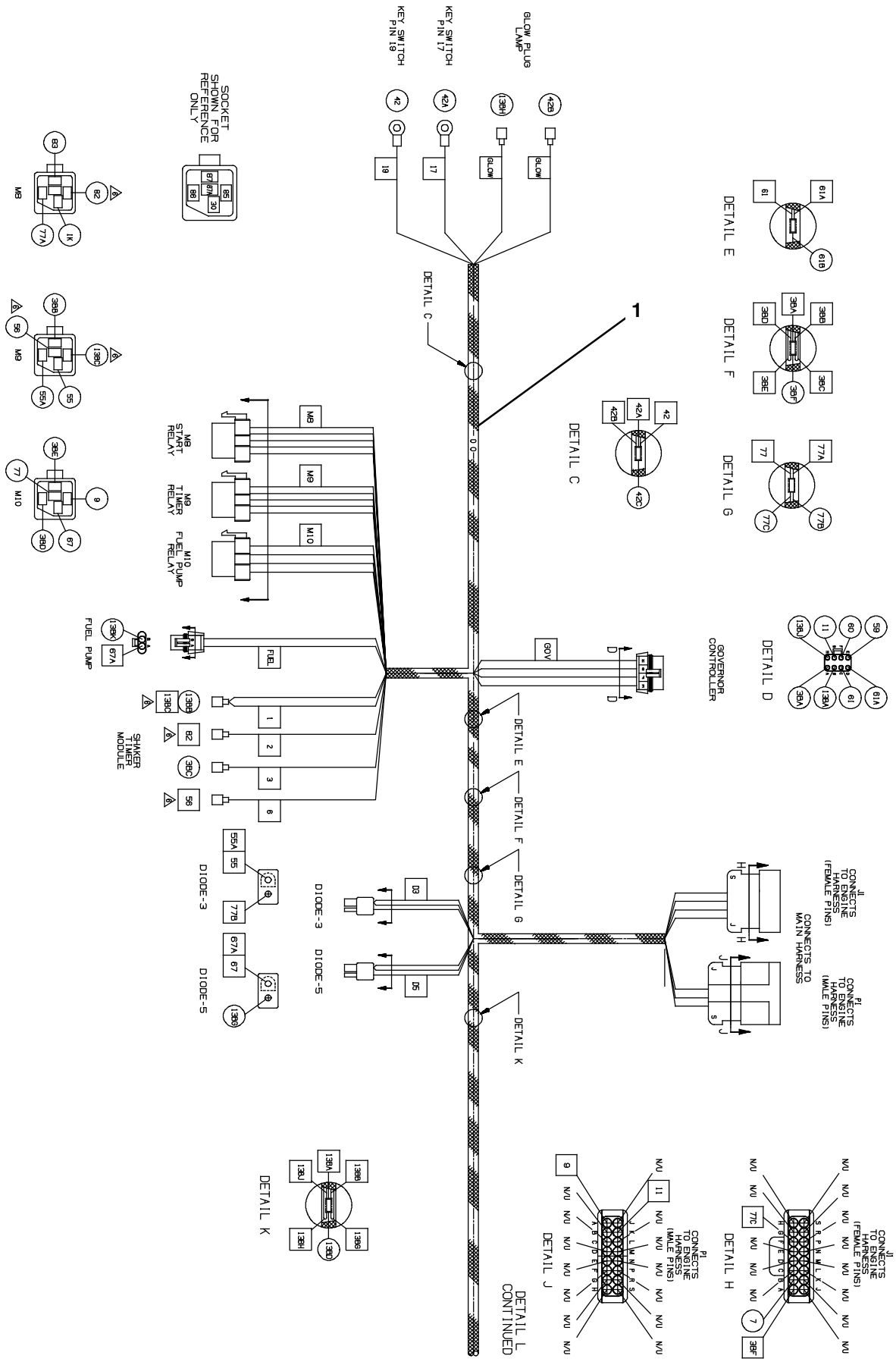

Fig. 69 - Electrical Wire Harnesses Group, Diesel Engine

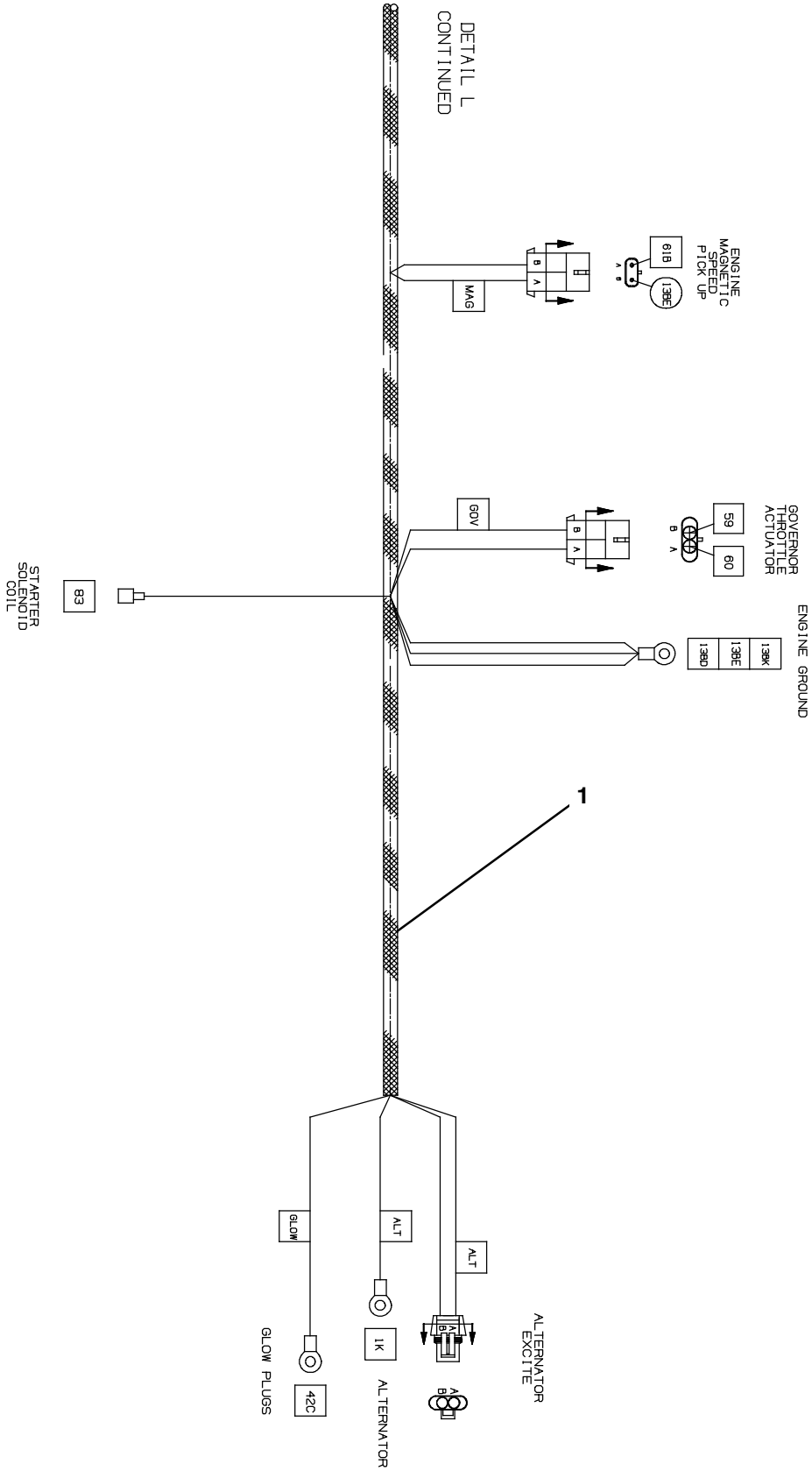

354725

Ref.	Part No.	Serial Number	Description	Qty.
1	1038358	(000000-)	Harness, Eng, Dsl [M30]	1

Fig. 70 - Label Group

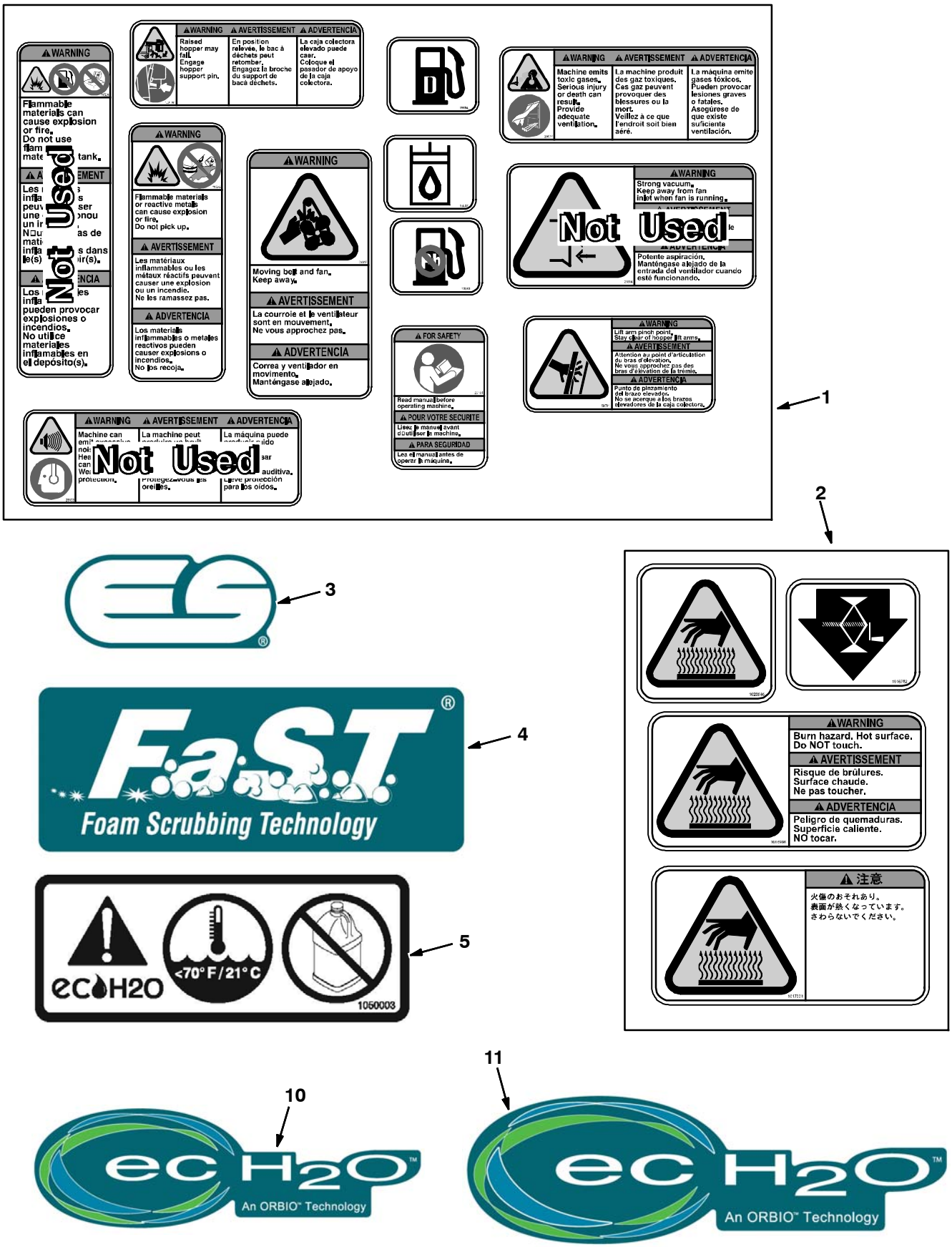

Fig. 70 - Label Group

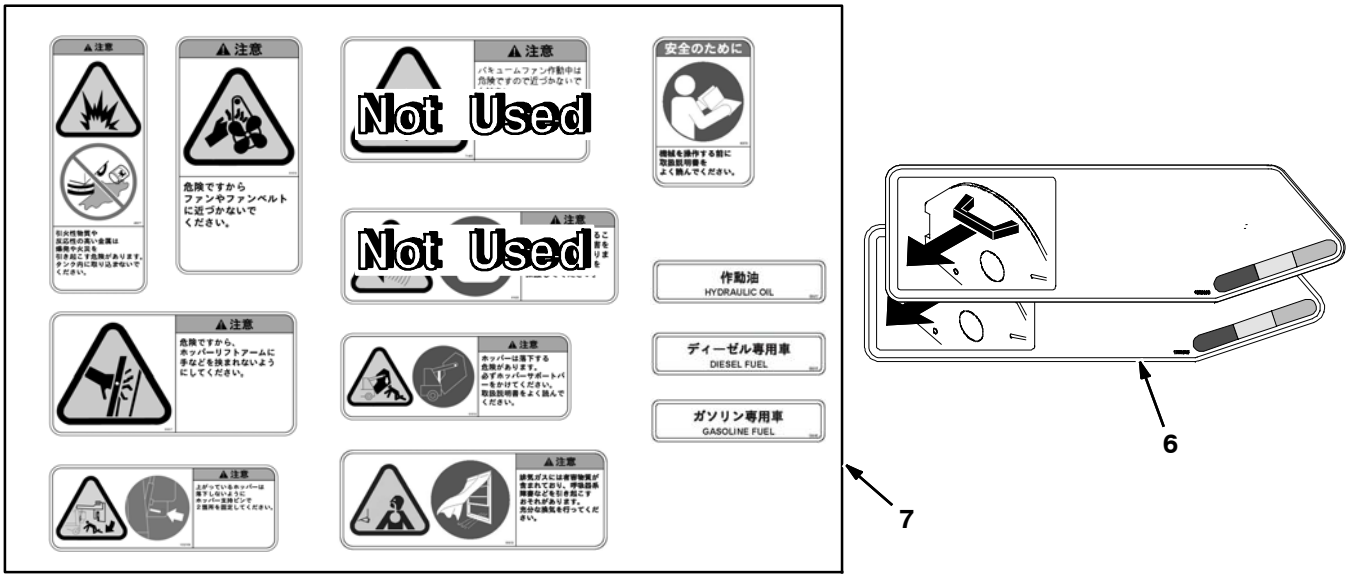

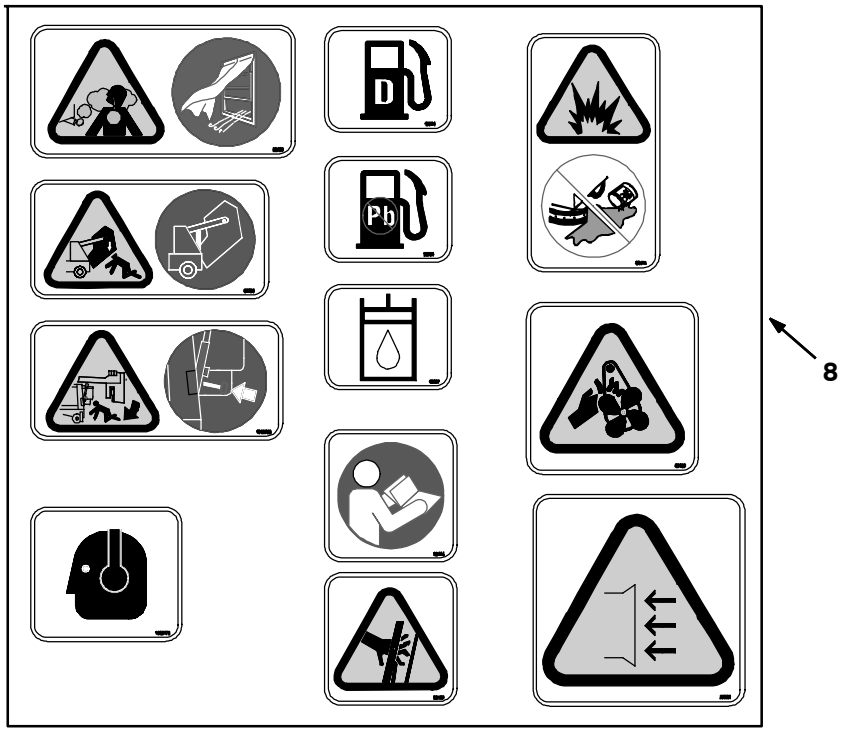

M30

Fig. 70 - Label Group

Ref.	Part No.	Serial Number	Description	Qty.
1	77221	(000000-)	Label Set, Info/Hzrd, Swpr / Scrbr	1
2	1017141	(000000-)	Label Set, Hi Temp	1
3	1065343	(000000-)	Label, Logo, 05.75L 2Color [ES]	3
4	1065342	(000000-)	Label, Logo, 07.95L 2Color [FaST]	3
5	1050003	(000000-)	Label [User, Attention, ec- H2O]	2
6	1031017	(000000-)	Label Set, Brush Indicator & Removal	1
7	1032450	(000000-)	Label Set, Info/Hzrd, Swpr / Scrbr, Tj (Japan Only)	1
8	1032418	(000000-)	Label Set, Info/Hzrd, Swpr / Scrbr (CE Only)	1
9	1064663	(000000-)	Label, Model, 2Color [M30]	1
10	1062813	(000000-)	Label, Logo, 12.3L 4Color [ec- H2O]	1
11	1064440	(000000-)	Label, Logo, 16.9L 4Color [ec- H2O]	1
	374224	(0000-)	Tape, Warning, Rh, Blk/Yel [33Mtr] (CE Only)	1
	C460919	(0000-)	Tape, Warning, Left, Blk/Yel [33Mtr] (CE Only)	1

SECTION 3

Contents **Page**

Fig. 1 - ES Pump Group 3-2
Fig. 2 - ES Tanks Group 3-4
Fig. 3 - Side Brush Motor Group (000000- 001278) 3-6
Fig. 4 - Side Brush Motor Group (001279-) 3-8
Fig. 5 - Side Brush Lift Group 3-10
Fig. 6 - Side Brush Solution Control Group . . . 3-12
Fig. 7 - Side Brush Hydraulic Valve Group 3-14
Fig. 8 - Side Brush Hydraulic Hose Group 3-16
Fig. 9 - FaST Pumps and Detergent Group . . . 3-18
Fig. 10 - FaST Solution Supply Group 3-20
Fig. 11 - FaST Solution SupplyGroup, Side Brush3-22
Fig. 12 - FaST Wire Harness Group 3-24
Fig. 13 - ec- H20 Solution Pump Group 3-26
Fig. 14 - ec- H20 Solution Pump Supply Group . 3-28
Fig. 15 - ec- H20 Solution Supply Group 3-30
Fig. 16 - ec- H20 Solution Supply Group with Side Brush 3-32
Fig. 17 - ec- H20 Wire Harnesses Group 3-34
Fig. 18 - Backup Alarm Kit 3-37
Fig. 19 - Light Kit, Flashing 3-38
Fig. 20 - Light Kit, Strobe 3-40
Fig. 21 - Light Kit, Flashing Overhead Guard . . 3-42
Fig. 22 - Light Kit, Strobe Overhead Guard 3-43
Fig. 23 - Overhead Guard Kit 3-44
Fig. 24 - Telemetry Group 3-46
Fig. 25 - Vacuum Wand Kit 3-48
Fig. 26 - Spray Nozzle Kit 3-50
Fig. 27 - Pressure Washer Mount Group 3-52
Fig. 28 - Pressure Washer Solution Group 3-54
Fig. 29 - Pressure Washer Hydraulic Hoses Group (000000- 003999) 3-56
Fig. 30 - Pressure Washer Hydraulic Hoses Group (004000-) 3-58
Fig. 31 - Transport Kit 3-60
Fig. 32 - Squeegee Guard Kit 3-62
Fig. 33 - Fire Extinguisher Kit 3-64
Fig. 34 - Documentation Group 3-65

Fig. 1 - ES Pump Group

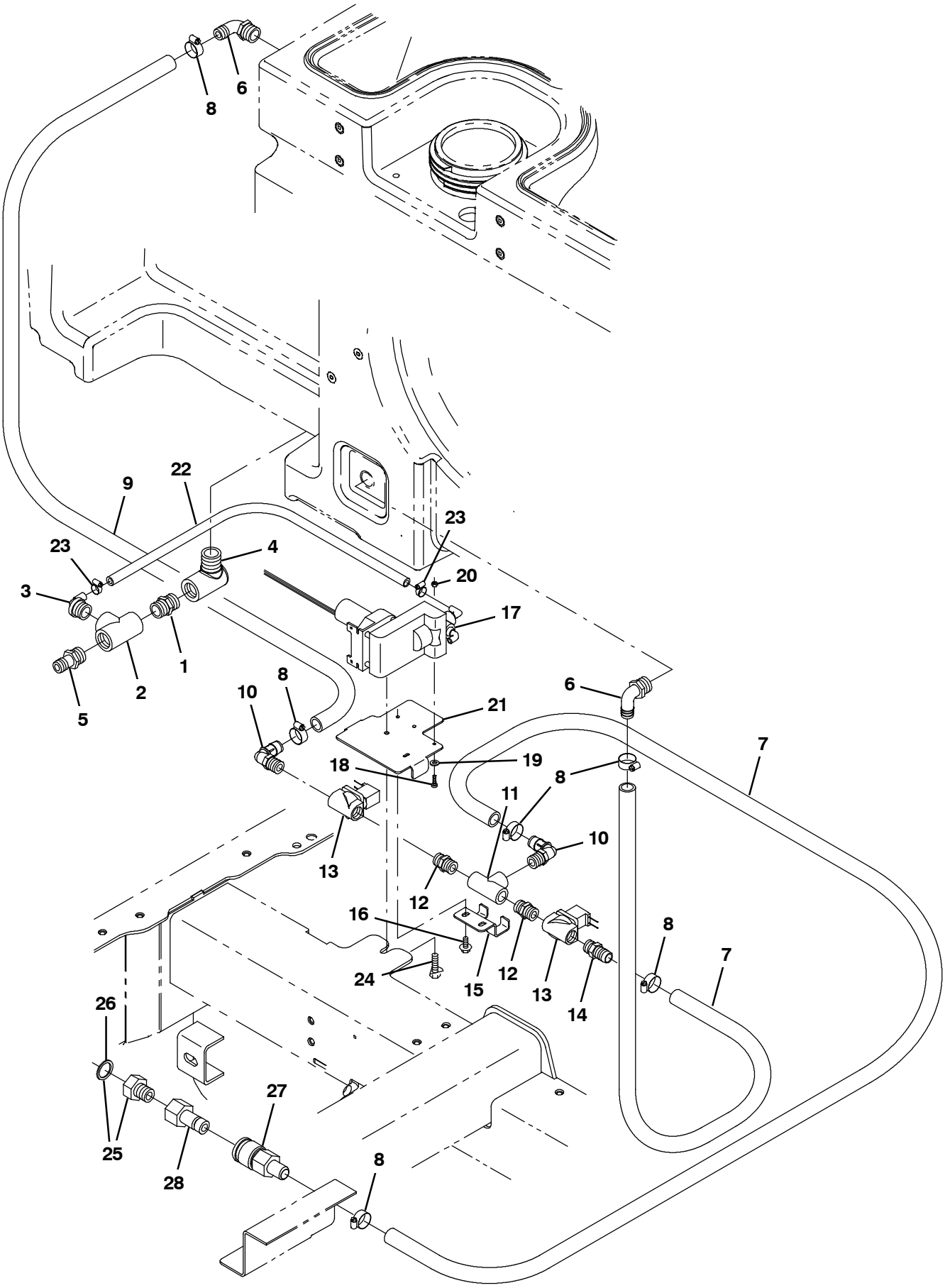

354652

Fig. 1 - ES Pump Group

	Ref.	Part No.	Serial Number	Description	Qty.
	1	24544	(000000-)	Fitting, Plstc, Str, Pm12/Pm12 1.60l	1
	2	42133A	(000000-)	Fitting, Plstc, Tee, Pf12/Pf12/Pf12	1
	3	79484	(000000-)	Fitting, Plstc, E90, Bm06/Pm12, Nyl	1
	4	69785	(000000-)	Fitting, Plstc, E90, Pf12/Pm12	1
	5	79273-2	(000000-004690)	Fitting, Plstc, Str, Bm12/Pm12	1
	5	365095	(004691-)	Fitting, Plstc, Str, Bm10/Pm12	1
	6	14877	(000000-)	Fitting, Plstc, E90, Bm12/Pm12	2
	7	1006410	(000000-)	Hose, Afmkt, Pvc, Brd, 0.75id, 03ft, Clr	2
	8	63810	(000000-)	Clamp, Hose, Wormdrive, 0.56-1.06d, .56w	6
	9	1015045	(000000-)	Hose, Afmkt, Pvc, Brd, 0.75id, 08ft, Clr	1
	10	63244-2	(000000-)	Fitting, Plstc, E90, Bm12/Pm08	2
	11	79497	(000000-)	Fitting, Plstc, Tee, Pf08/Pf08/Pf08	1
	12	86508	(000000-)	Fitting, Plstc, Str, Pm08/Pm08	2
	13	73433	(000000-)	Valve, Water, Solenoid, 12vdc Pf08/Pf08	2
	14	78398	(000000-)	Fitting, Plstc, Str, Bm12/Pm08, Nyl	1
	15	1016837	(000000-)	Bracket, Mtg, Valve	1
	16	222158	(000000-)	Screw, Hex, M6 X 1.00 X 10, Fmg	2
	17	73260	(000000-)	Pump, Detgt, 14vdc, 150ml/Min 20psi	1
	18	24265	(000000-)	Screw, Pan, Phl, M4 X 0.70 X 16, Ss	2
	19	01683	(000000-)	Washer, Flat, 10, Ss	2
	20	33932	(000000-)	Nut, Hex, Lock, M4 X 0.70, Nl, Ss	2
	21	1033792	(000000-)	Plate, Hsng [FaST]	1
	22	1006400	(000000-)	Hose, Afmkt, Pvc, Clr, 0.38id, 03ft	1
	23	43844	(000000-)	Clamp, Hose, Wormdrive, 0.25-0.62d, .31w	2
	24	76099	(000000-)	Screw, Hex, M8 X 1.25 X 25, Fmg	1
▽	25	375322	(000000-)	Fitting Kit, Hose, Garden	1
▲	26	01316	(000000-)	Washer, Flat, 0.66b 1.00d .12, Rbr	1
	27	24105	(000000-)	Fitting, Brs, Qdc, Bm12/Qf08	1
	28	33295	(000000-)	Fitting, Brs, Qdc, Pf08 [Parker Bh3f]	1

Fig. 2 - ES Tanks Group

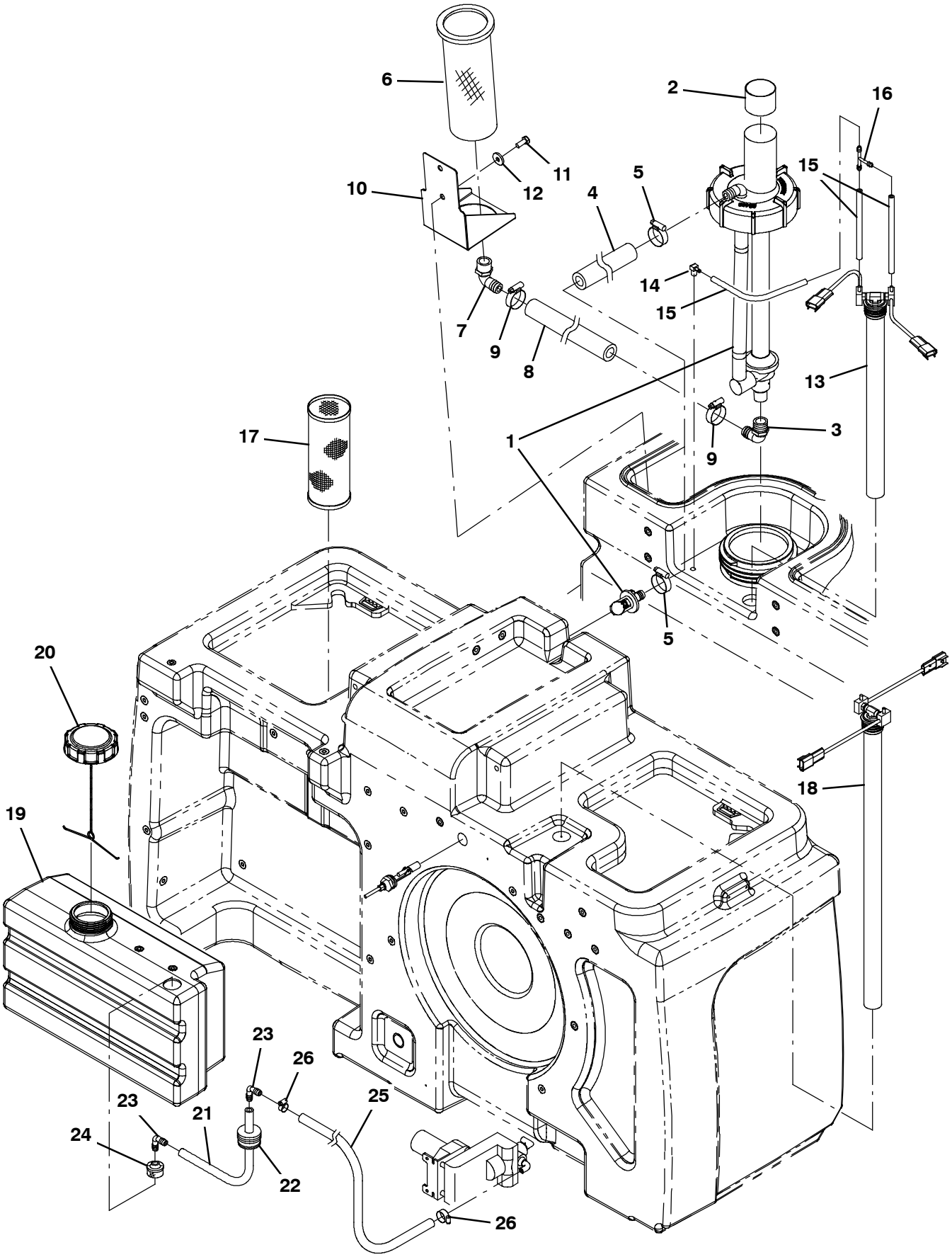

354653

Fig. 2 - ES Tanks Group

Ref.	Part No.	Serial Number	Description	Qty.
1	1021210	(000000-)	Pump Assy, Column, Es (See Breakdowns)	1
2	1028697	(000000-)	Sleeve, Rbr, 3.50b 3.58d 1.8l	1
3	14877	(000000-)	Fitting, Plstc, E90, Bm12/Pm12	1
4	1015033	(000000-)	Hose, Afmkt, Pvc, Brd 0.62id 01ft	1
5	63810	(000000-)	Clamp, Hose, Wormdrive, 0.56- 1.06d, .56w	2
6	386652	(000000-)	Strainer, Soltn, 20mesh, Cyl, 3.5d 09.5l	1
7	24543	(000000-)	Fitting, Plstc, E90, Bm12/Pf12	1
8	1015048	(000000-)	Hose, Afmkt, Pvc, Brd, 0.75id, 01ft, Clr	1
9	11399	(000000-)	Clamp, Hose, Wormdrive, 0.81- 1.50d, .50w	2
10	1019636	(000000-)	Bracket, Mtg, Strainer	1
11	09740	(000000-)	Screw, Hex, M8 X 1.25 X 20, Ss	2
12	1017218	(000000-)	Washer, Flat, 0.32b 1.00d .12, Ss	1
13	1072882	(000000-)	Switch Assy, Press, Dbl, 17.5l	1
14	32183	(000000-)	Fitting, Brs, E90, Bm03/Pm02	1
15	1031572	(000000-)	Hose, Afmkt, Vacuum, 0.16id, 01ft	3
16	59886	(000000-)	Fitting, Plstc, Tee, Bm03/Bm03/Bm03	1
17	1039019	(000000-)	Filter, Soltn, 020mesh, Pm12 3.2d 08.0l	1
18	1072883	(000000-)	Switch Assy, Press, Dbl, 26.2l	1
19	1022229	(000000-)	Tank, Detgt, Trimmed	1
20	1011885	(000000-)	Cap, Tank	1
21	1006400	(000000-)	Hose, Afmkt, Pvc, Brd, 0.38id, 03ft, Clr	1
22	20944	(000000-)	Grommet, Pye, 0.37id, F/1.5h, .13 Matl	1
23	20951	(000000-)	Fitting, Plstc, E90, Bm06/Bm06	2
24	20952	(000000-)	Screen, Pump	1
25	1014930	(000000-)	Hose, Afmkt, Pvc, Clr, 0.38id, 08ft	1
26	43844	(000000-)	Clamp, Hose, Wormdrive, 0.25- 0.62d, .31w	2

Fig. 3 - Side Brush Motor Group (000000-001278)

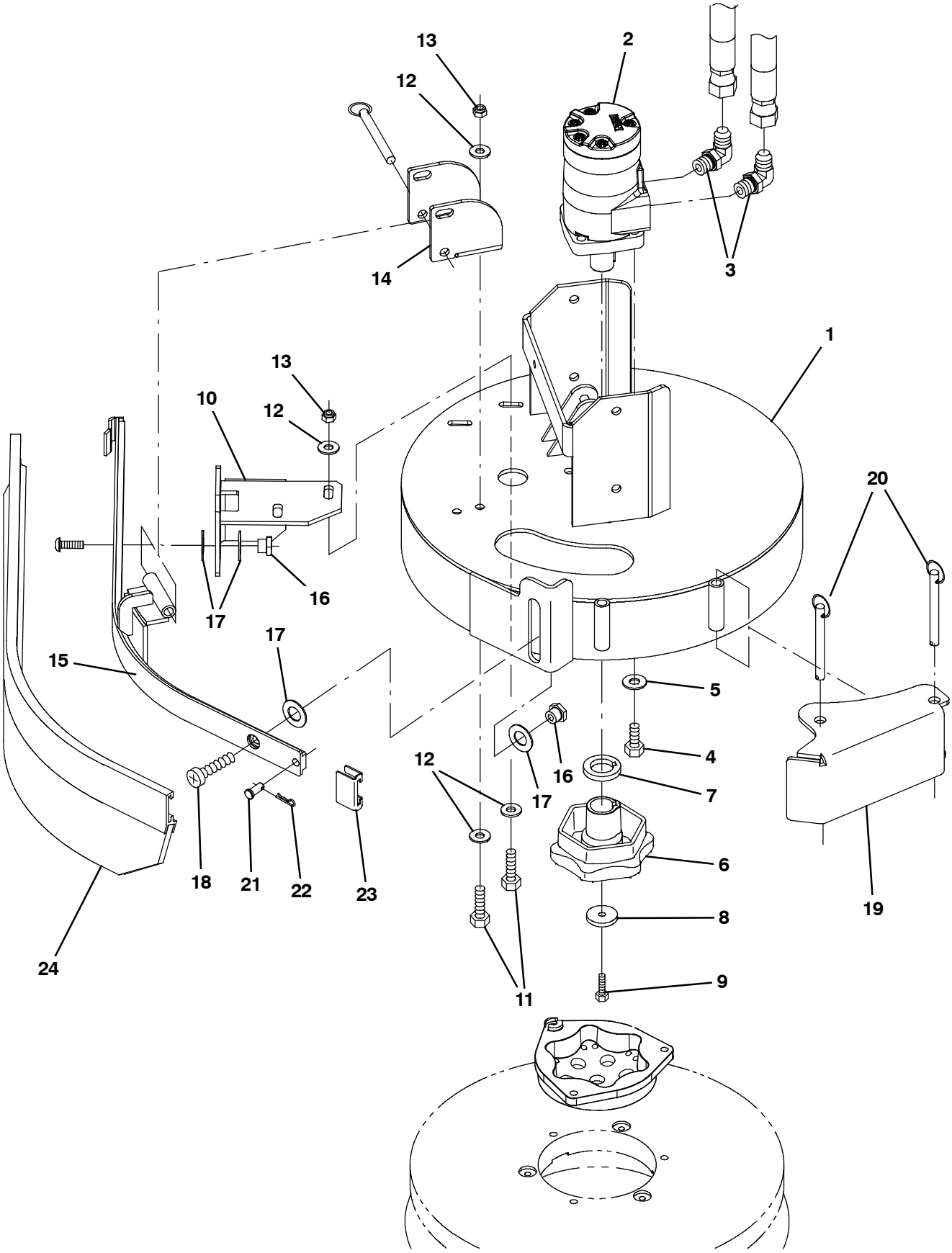

354654

Fig. 3 - Side Brush Motor Group (000000-001278)

Ref.	Part No.	Serial Number	Description	Qty.
1	1021794	(000000-001278)	Bracket Wldt, Mtg, Side Brush	1
2	1029379	(000000-001278)	Motor, Hyd, Gear, Int 08.9 Bi-Dir 2500 (See Breakdowns)	1
3	56821	(000000-001278)	Fitting, Hyd, E90, Jm08/Om10	2
4	01762	(000000-001278)	Screw, Hex, .38-16 X 0.75, Nl	4
5	32492	(000000-001278)	Washer, Flat, 0.38, Std	4
6	377359	(000000-001278)	Hub, Drive, Brush, Disk, 1.00b [6t]	1
7	25611	(000000-001278)	Spacer, Hub, Keyed	1
8	19191	(000000-001278)	Spacer	1
9	25046	(000000-001278)	Screw, Hex, .25-20 X 1.00, G5	1
10	1022135	(000000-001278)	Bracket, Mtg, Sqge	1
11	09010	(000000-001278)	Screw, Hex, M8 X 1.25 X 25, Ss	4
12	01685	(000000-001278)	Washer, Flat, 0.38b 0.88d .08, Ss	8
13	08713	(000000-001278)	Nut, Hex, Lock, M8 X 1.25, Nl, Ss	4
14	1022188	(000000-001278)	Bar, Retainer	1
15	1022111	(000000-001278)	Frame Wldt, Sqge, Side Brush	1
16	1022302	(000000-001278)	Nut, T, M8 X 1.25 X 14.50od X 9.5l	2
17	64425	(000000-001278)	Washer, Thrust, 0.61b 1.25d .06, Fgl	4
18	223470	(000000-001278)	Screw, Btn, M8 X 1.25 X 25, Ss	2
19	1022260	(000000-001278)	Bumper Wldt, Brush, Side	1
20	369359	(000000-001278)	Pin, Hitch, .375d X 3.12l, Pl	3
21	46800	(000000-001278)	Pin, Clevis, 0.31d X 0.75l	1
22	08179	(000000-001278)	Pin, Cotter, .094 X 1.00	1
23	86759	(000000-001278)	Retainer, Sqge	1
24	1025005	(000000-001278)	Squeegee Assy, Sba, Linatex	1
24	1027716	(000000-001278)	Squeegee Assy, Sba, Ure	1

Fig. 4 - Side Brush Motor Group (001279-)

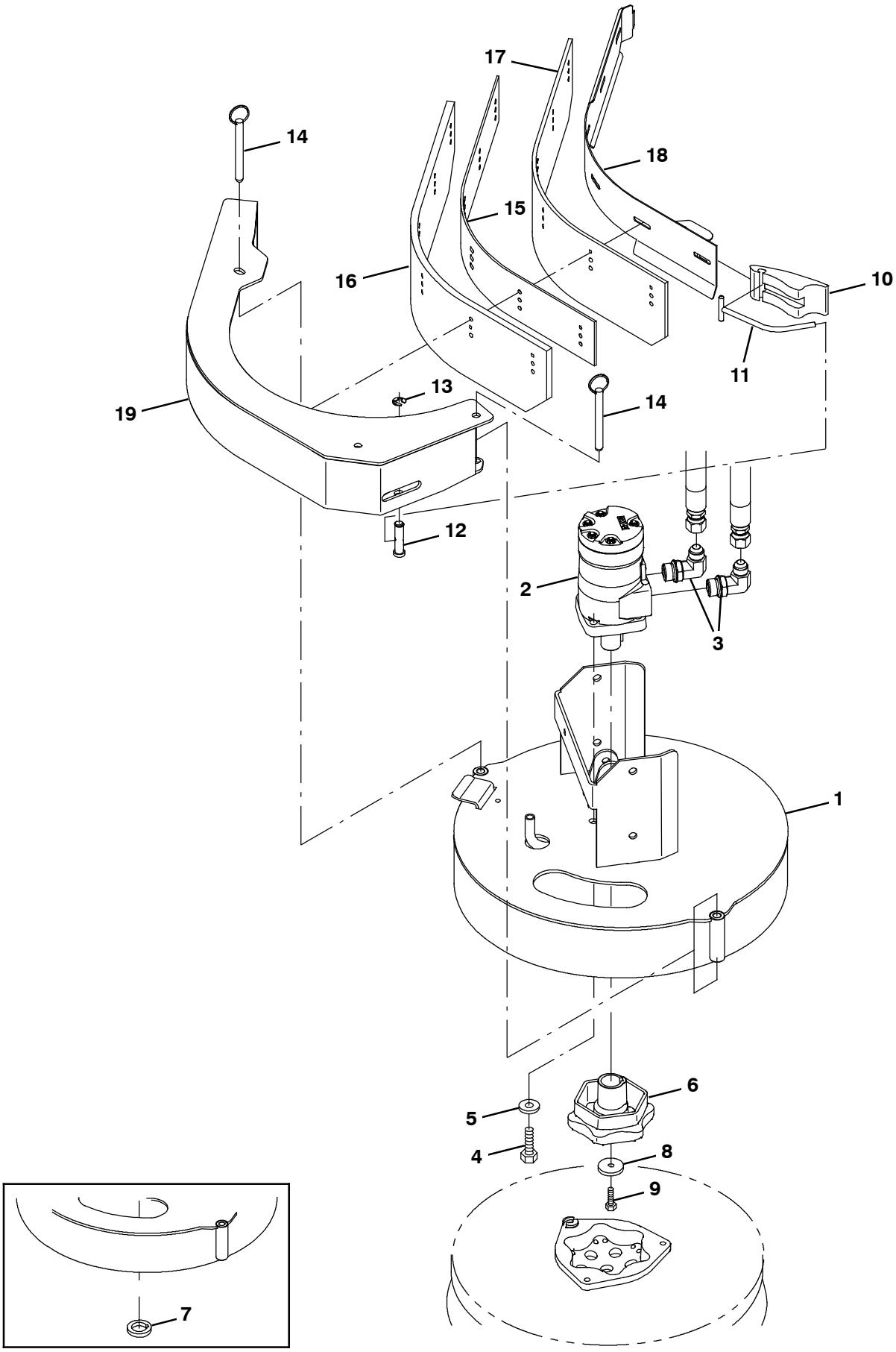

354463

Fig. 4 - Side Brush Motor Group (001279-)

	Ref.	Part No.	Serial Number	Description	Qty.
	1	1047002	(001279-)	Bracket Wldt, Mtg, Side Brush Fixed	1
	2	1029379	(001279- 001966)	Motor, Hyd, Gear, Int 08.9 Bi- Dir 2500 (See Breakdowns)	1
▽	2	1068812	(001967-)	Motor, Hyd, Gear, Int 08.9 Bi- Dir 2500	1
▲		22615	(001967-)	Seal Kit, Motor [Cl]	1
	3	56821	(001279-)	Fitting, Hyd, E90, Jm08/Om10	2
	4	01762	(001279-)	Screw, Hex, .38- 16 X 0.75, Nl	4
	5	32492	(001279-)	Washer, Flat, 0.38 Std	4
	6	1042968	(001279-)	Hub, Drive, Brush, Disk, 1.00b [6t]	1
	7	25611	(001279- 001966)	Spacer, Hub, Keyed	1
	8	19191	(001279-)	Spacer	1
	9	25046	(001279-)	Screw, Hex, .25- 20 X 1.00, 5	1
	10	21601	(001279-)	Cam, Front	1
	11	386298	(001279-)	Pin Wldt, Front	1
	12	21603	(001279-)	Pin, Grvd, 0.43d 01.8l [303ss]	1
	13	24555	(001279-)	Ring, Retaining, Ext, 0.38d, [E- Ring]	1
	14	369359	(001279-)	Pin, Hitch, .375d X 3.12l, Pl	2
	15	1046995	(001279- 004481)	Spacer, Sqge, Side Brush, Rbr	1
	15	1073414	(004482-)	Spacer, Sqge, Side Brush, Rbr	1
	16	1046980	(001279- 004481)	Blade, Sqge, Side Brush, Linatex	1
	16	1073412	(004482-)	Blade, Sqge, Side Brush, Linatex	1
	16	1059091	(001279- 004481)	Blade, Sqge, Side Brush, Urethane	1
	16	1073413	(004482-)	Blade, Sqge, Side Brush, Urethane	1
	17	1047238	(001279- 004481)	Blade, Sqge, Side Brush, Linatex	1
	17	1073415	(004482-)	Blade, Sqge, Side Brush, Linatex	1
	17	1059092	(001279- 004481)	Blade, Sqge, Side Brush, Urethane	1
	17	1073416	(004482-)	Blade, Sqge, Side Brush, Urethane	1
	18	1047060	(001279- 004481)	Plate Wldt, Retainer, Sqge	1
	18	1073411	(004482-)	Plate Wldt, Retainer, Sqge	1
	19	1046976	(001279- 004481)	Bumper Wldt, Brush, Side	1
	19	1073409	(004482-)	Bumper Wldt, Brush, Side	1

Fig. 5 - Side Brush Lift Group

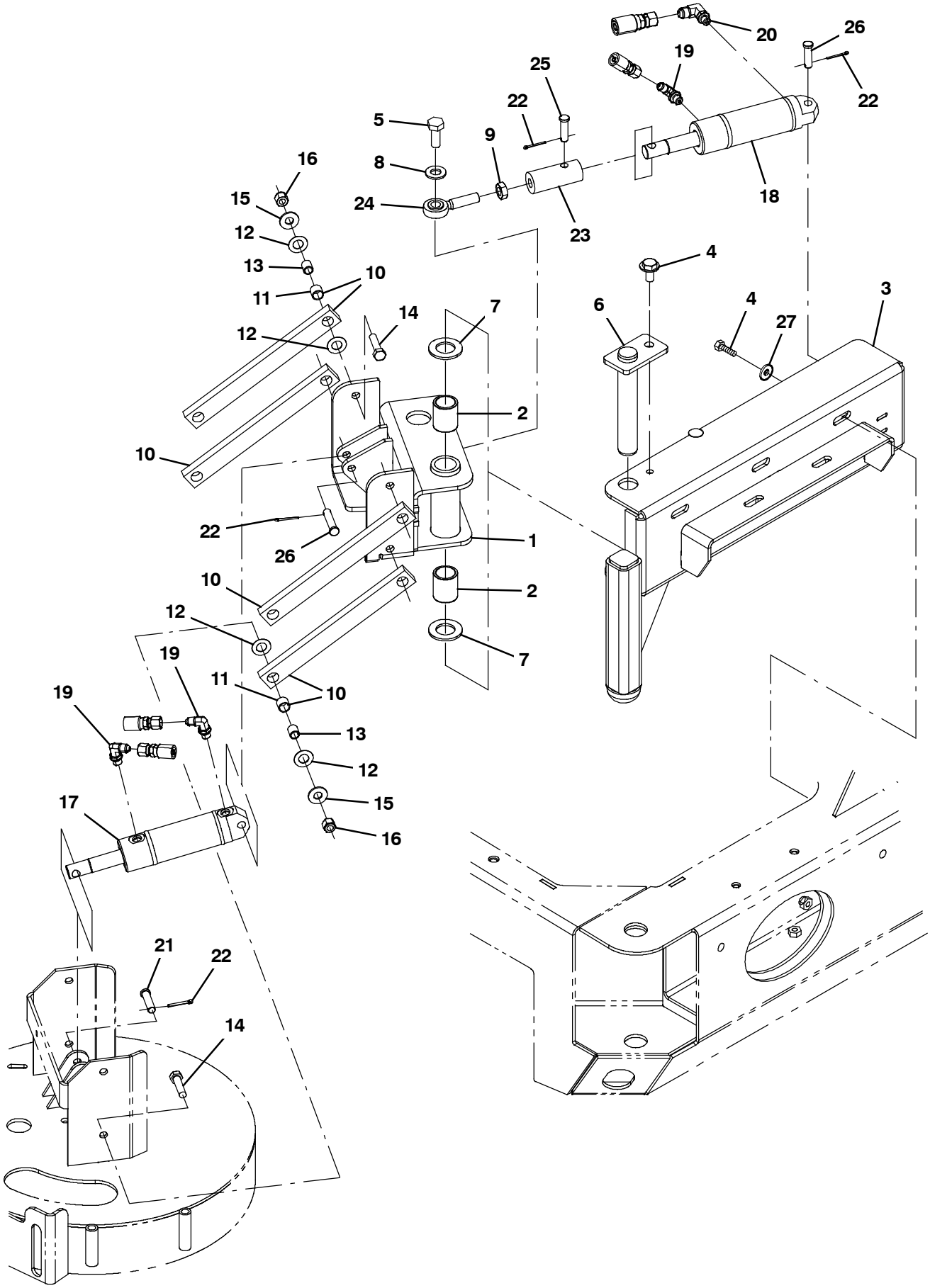

354655

Fig. 5 - Side Brush Lift Group

	Ref.	Part No.	Serial Number	Description	Qty.
	1	1021439	(000000-)	Pivot Wldt, Brush, Side	1
	2	71868	(000000-)	Bushing, Sleeve, 1.00b 1.13d 1.50l, Fgl	2
	3	1021473	(000000-)	Channel Wldt, Pivot	1
	4	09010	(000000-)	Screw, Hex, M8 X 1.25 X 25, Ss	6
	5	41346	(000000-)	Screw, Hex, M12 X 1.75 X 30, 8.8	1
	6	1021617	(000000-)	Pin Wldt	1
	7	71869	(000000-)	Washer, Thrust, 1.00b 1.75d 0.13, Fbr	2
	8	32486	(000000-)	Washer, Flat, 0.50, Sae	1
	9	48985	(000000-)	Nut, Hex, Jam, .50- 20	1
▽	10	63175- 1	(000000-)	Arm, Link	4
▲	11	63233	(000000-)	Bushing, Sleeve, 0.50b 0.59d 0.50l, Bnz	2
	12	59633	(000000-)	Bearing, Thrust, 0.53b 1.00d 0.03w	16
	13	1027926	(000000-)	Sleeve, P/M, 0.37b 0.50d 0.6l [430ss]	8
	14	36845	(000000-)	Screw, Hex, .38- 16 X 1.50, Ss	8
	15	01685	(000000-)	Washer, Flat, 0.38b 0.88d .08, Ss	8
	16	59156	(000000-)	Nut, Hex, Lock, .38- 16, Nl, Ss	8
	17	1038137	(000000-)	Cylinder, Hyd, 1.5b 07.8l 02.80strk 2500	1
	18	1038115	(000000-)	Cylinder, Hyd, 1.5b 07.8l 02.75strk 2500	1
	19	77097	(000000-)	Fitting, Hyd, E90, Jm04/Om04	3
	20	77098	(000000-)	Fitting, Hyd, E90, Jm06/Om04	1
	21	29558	(000000-)	Pin, Clevis, 0.37d X 1.50l	1
	22	08179	(000000-)	Pin, Cotter, .094 X 1.00	4
	23	1021564	(000000-)	Adapter, Rod- End, Side Brush	1
	24	71874	(000000-)	Rod- End, 0.50- 20rh Mal 0.50b	1
	25	29557	(000000-)	Pin, Clevis, 0.37d X 1.31l	1
	26	17461	(000000-)	Pin, Clevis, 0.37d X 1.75l	2
	27	32491	(000000-)	Washer, Flat, 0.31, Std	2

Fig. 6 - Side Brush Solution Control Group

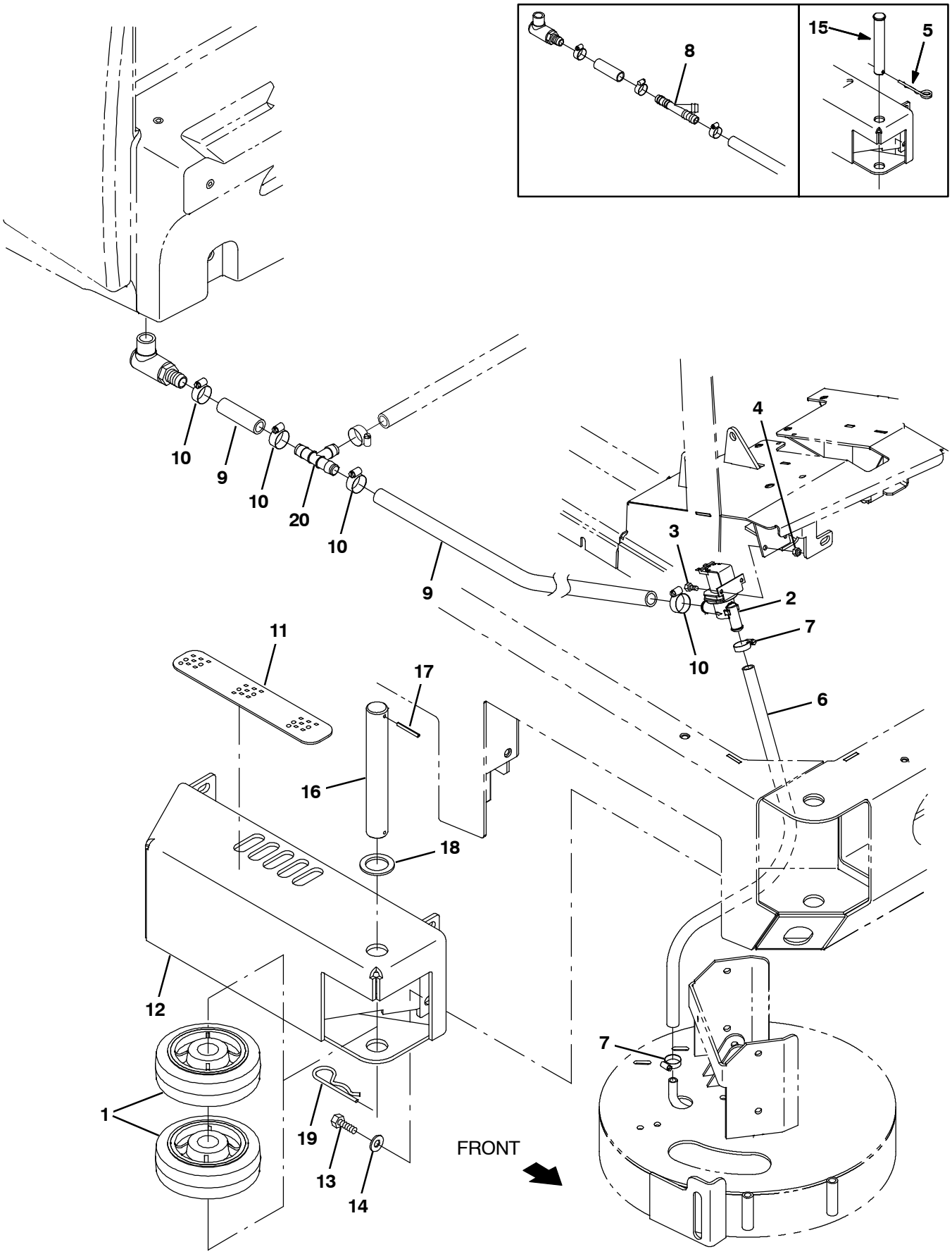

354656

Fig. 6 - Side Brush Solution Control Group

Ref.	Part No.	Serial Number	Description	Qty.
1	1060130	(000000-)	Wheel, 06.0d 2.00w 1.19b, Gray Rbr	2
2	1022106	(000000-)	Valve Assy, Water, Solenoid, 12vdc	1
3	09738	(000000-)	Screw, Hex, M5 X 0.80 X 12, Ss	2
4	09739	(000000-)	Nut, Hex, Lock, M5 X 0.80, Nl, Ss	2
5	761490	(000000- 001248)	Pin, Cotter, Hair, Dbl	1
6	50178	(000000-)	Hose, Pvc, Clr, 0.50id 0.69od 026.0l	1
7	54333	(000000-)	Clamp, Hose, Wormdrive, 0.31- 0.88d, .31w	2
8	393255	(000000- 004690)	Fitting, Plstc, Tee, Bm12/Bm12/Bm12	1
9	1015045	(000000- 004690)	Hose, Afmkt, Pvc, Brd, 0.75id, 08ft, Clr	1
9	1015032	(004691-)	Hose, Afmkt, Pvc, Brd, 0.62id, 08ft, Clr	1
10	63810	(000000-)	Clamp, Hose, Wormdrive, 0.56- 1.06d, .56w	4
11	82839	(000000-)	Tread, Non- Skid, 02.2w 11.5l	1
12	1022318	(000000-)	Guard Wldt, Brush, Side	1
13	12317	(000000-)	Screw, Hex, M10 X 1.50 X 30, Ss	4
14	01686	(000000-)	Washer, Flat, 0.44b 1.00d .08, Ss	4
15	9006334	(000000- 001248)	Pin Kit, Wheel, Ci [M20/T20/M30]	1
16	1053838	(001249-)	Pin, 30mmd X 215mml	1
17	23146	(001249-)	Pin, Roll, .187d X 1.62l, .187/.192	1
18	47719	(001249-)	Washer, Flat, 1.26b 1.88d .13, Stl	1
19	34411	(001249-)	Pin, Cotter, Hair, 1.00d .178 Wir	1
20	1062116	(004691-)	Fitting, Plstc, Tee, Bm10/Bm10/Bm10	1

Fig. 7 - Side Brush Hydraulic Valve Group

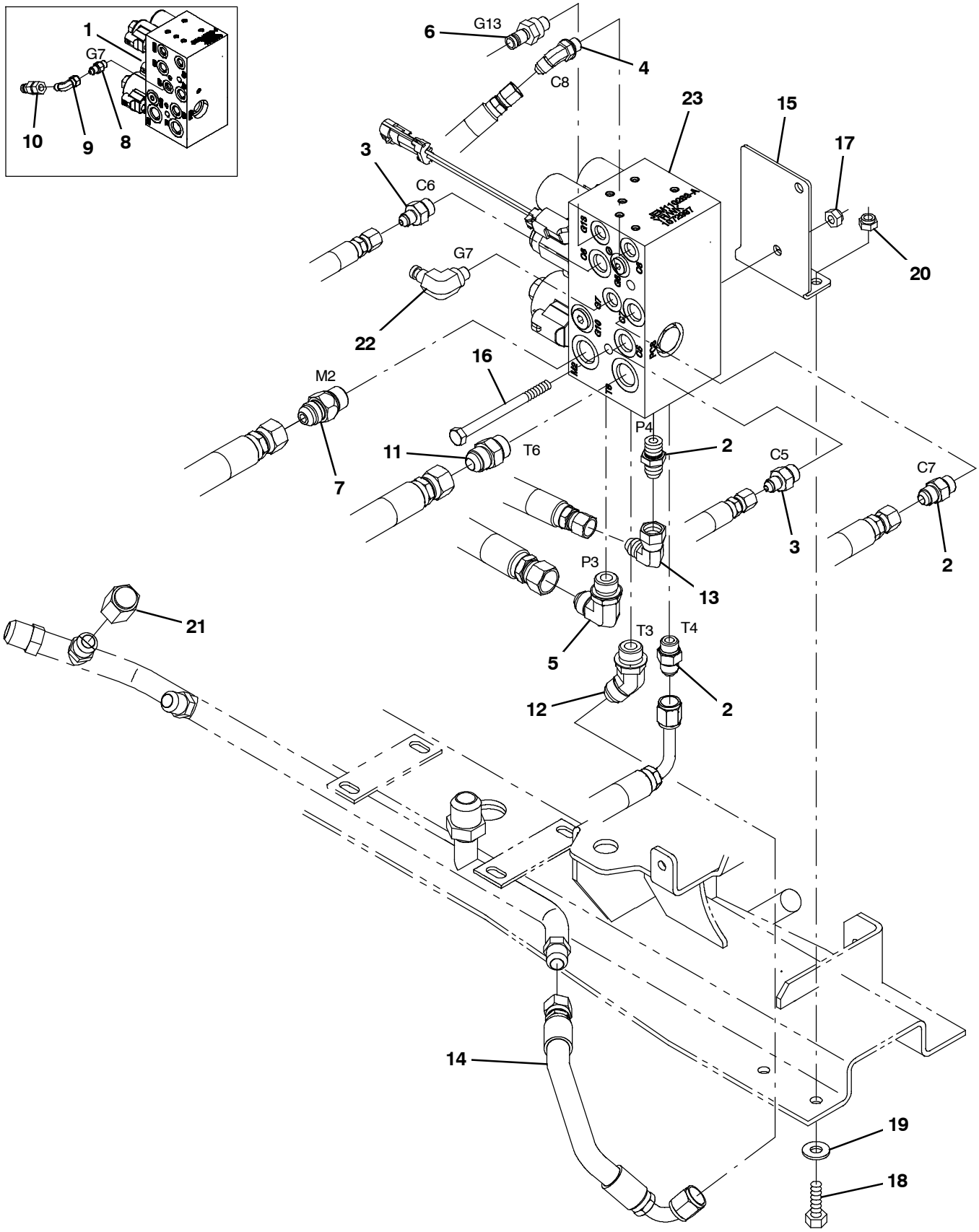

354657

Fig. 7 - Side Brush Hydraulic Valve Group

Ref.	Part No.	Serial Number	Description	Qty.
1	1037805	(000000- 004114)	Valve, Cntrl, Hyd, Solenoid, 03/16gpm (See Breakdowns)	1
2	56690	(000000-)	Fitting, Hyd, Str, Jm06/Om06	3
3	55685	(000000-)	Fitting, Hyd, Str, Jm04/Om06	2
4	34359	(000000-)	Fitting, Hyd, E45, Jm04/Om04	1
5	44868	(000000-)	Fitting, Hyd, E90, Jm08/Om08	1
6	395973	(000000-)	Fitting, Hyd, Str, Om04/Qm04	1
7	1026119	(000000-)	Valve, Hyd, Check, 5000psi Jm08/Om08	1
8	55586	(000000- 001181)	Fitting, Hyd, Str, Jm04/Om04	1
9	39210	(000000- 001181)	Fitting, Hyd, E90, Jf04/Jm04	1
10	396476	(000000- 001181)	Fitting, Hyd, Str, Jf04/Qm04	1
11	44869	(000000-)	Fitting, Hyd, Str, Jm08/Om08	1
12	42226	(000000-)	Fitting, Hyd, E45, Jm08/Om08	1
13	47504	(000000-)	Fitting, Hyd, E90, Jf06/Jm06	1
14	1037011	(000000-)	Hose, Hyd, Tc08, Jf08str/Jf08e90, 012.0	1
15	1045272	(000000-)	Bracket, Valve, Sba [M20 AND T20]	1
16	364441	(000000-)	Screw, Hex, M8 X 1.25 X 110, Ss	2
17	08709	(000000-)	Nut, Hex, Lock, M8 X 1.25, Nl	2
18	09010	(000000-)	Screw, Hex, M8 X 1.25 X 25, Ss	2
19	32491	(000000-)	Washer, Flat, 0.31, Std	2
20	08713	(000000-)	Nut, Hex, Lock, M8 X 1.25, Nl, Ss	2
21	60090	(000000-)	Fitting, Hyd, Cap, Jf08	1
22	395974	(001182-)	Fitting, Hyd, E90, Om04/Qm04	1
23	1072997	(004115-)	Valve, Cntrl, Hyd, Solenoid, 03/16gpm (See Breakdowns)	1

Fig. 8 - Side Brush Hydraulic Hose Group

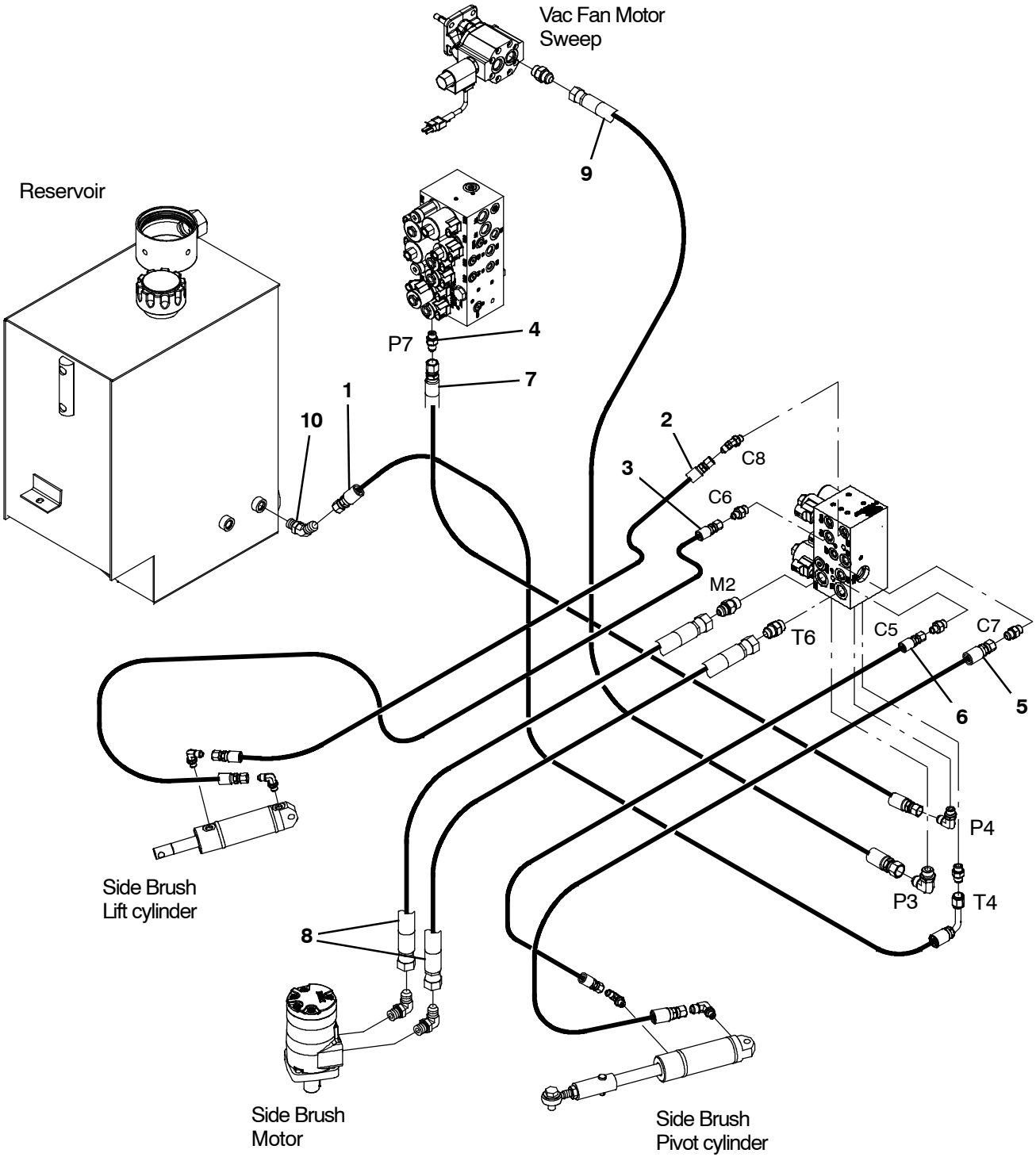

354658

Fig. 8 - Side Brush Hydraulic Hose Group

Ref.	Part No.	Serial Number	Description	Qty.
1	361047	(000000-)	Hose, Hyd, Med06, Jf06e90l/Jf06str,038.0	1
2	1025990	(000000-)	Hose, Hyd, Tc04, Jf04str/Jf04str, 039.0	1
3	1036901	(000000-)	Hose, Hyd, Tc04, Jf04str/Jf04str, 044.0	1
4	56690	(000000-)	Fitting, Hyd, Str, Jm06/Om06	1
5	1036904	(000000-)	Hose, Hyd, Tc06, Jf06str/Jf06str, 028.0	1
6	1036903	(000000-)	Hose, Hyd, Tc04, Jf04str/Jf04str, 025.0	1
7	377236	(000000- 003999)	Hose, Hyd, Tc06, Jf06str/Jf06str, 062.0	1
7	1041389	(004000-)	Hose, Hyd, Tc06, Jf06str/Jf06str, 086.0	1
8	1036902	(000000-)	Hose, Hyd, Tc08, Jf08str/Jf08str, 039.0	2
9	1036907	(000000- 003999)	Hose, Hyd, Tc08, Jf08str/Jf08str, 060.0	1
9	1036946	(004000-)	Hose, Hyd, Tc08, Jf08str/Jf08str, 084.0	1
10	47522	(000000-)	Fitting, Hyd, E45, Jm06/Om06	1

Fig. 9 - FaST Pumps and Detergent Group

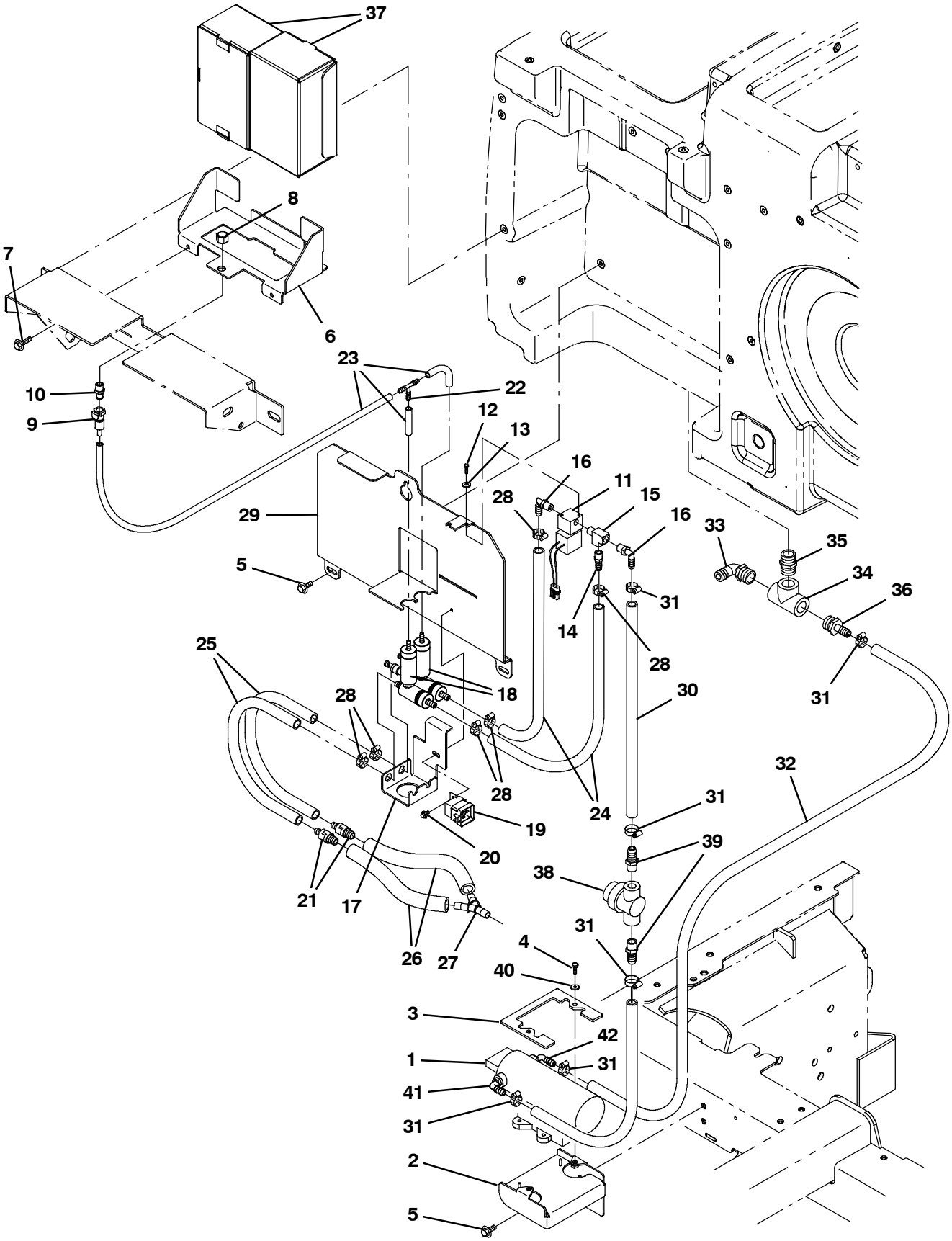

354721

Fig. 9 - FaST Pumps and Detergent Group

Ref.	Part No.	Serial Number	Description	Qty.
1	1036801	(000000-)	Pump, Soltn, 13.7vdc, 65psi [FaST Ii+]	1
2	1039356	(000000-)	Bracket, Retainer, Pump	1
3	1039357	(000000-)	Bracket, Retainer, Pump	1
4	15678	(000000-)	Screw, Hex, M6 X 1.00 X 16, Ss	2
5	1020341	(000000-)	Screw, Hex, M8 X 1.25 X 20, Ss, Sems	7
6	1033791	(000000-)	Bracket, Mtg [FaST]	1
7	76099	(000000-)	Screw, Hex, M8 X 1.25 X 25, Fmg	2
8	1005435	(000000-)	Fitting, Plstc, Pipe, Cap, Pf04	1
9	1002898	(000000-)	Fitting, Plstc, Str, Bm04, Cplg, Fem	1
10	1002899	(000000-)	Fitting, Plstc, Str, Pm04, Cplg, Mal	1
11	1018098	(000000-)	Valve, Water, Solenoid, 12vdc 6.0mm Pf04	1
12	09200	(000000-)	Screw, Pan, Phl, M5 X 0.80 X 12, Ss	2
13	01683	(000000-)	Washer, Flat, 10, Ss	2
14	150540	(000000-)	Fitting, Plstc, Str, Bm06/Pm04	1
15	150709	(000000-)	Fitting, Brs, Tee, Pm04/Pf04/Pf04, Run	1
16	57248	(000000-)	Fitting, Plstc, E90, Bm06/Pm04, Nyl	2
17	1033957	(000000-)	Bracket, Mtg [FaST]	1
18	9008868	(000000-)	FaST Kit, Injector [M20/T20/M30 FaST III] (See Breakdown)	2
19	56186	(000000-)	Relay, 12vdc, 040a, Spdt No	1
20	361339	(000000-)	Screw, Hex, M6 X 1.00 X 16, Fmg	1
21	1035794	(000000-)	Valve, Check, 0005psi Bm06/Bm08	2
22	150713	(000000-)	Fitting, Plstc, Tee, Bm04/Bm04/Bm04	1
23	1006415	(000000-)	Hose, Afmkt, Pvc, Clr, 0.25id, 03ft	1
24	1006416	(000000-)	Hose, Afmkt, Pvc, Clr, 0.38id, 03ft	1
25	1024237	(000000-)	Hose, Afmkt, Pvc, Wir, 0.50id, 03ft, Clr	1
26	1014929	(000000-)	Hose, Afmkt, Pvc, Clr, 0.38id, 01ft	1
27	1010668	(000000-)	Fitting, Plstc, Y, Bm08/Bm08/Bm08, Nyl	1
28	43844	(000000-)	Clamp, Hose, Wormdrive, 0.25- 0.62d, .31w	6
29	1037262	(000000-)	Plate, Mtg [FaST]	1
30	1006400	(000000-)	Hose, Afmkt, Pvc, Brd, 0.38id, 03ft, Clr	1
31	54333	(000000-)	Clamp, Hose, Wormdrive, 0.31- 0.88d, .31w	4
32	1011412	(000000-)	Hose, Afmkt, Pvc, Brd, 0.50id, 08ft, Clr	1
33	14877	(000000- 004690)	Fitting, Plstc, E90, Bm12/Pm12	1
33	73468	(004691-)	Fitting, Plstc, E90, Bm10/Pm12	1
34	42133A	(000000-)	Fitting, Plstc, Tee, Pf12/Pf12/Pf12	1
35	24544	(000000-)	Fitting, Plstc, Str, Pm12/Pm12 1.60l	1
36	79273- 1	(000000-)	Fitting, Plstc, Str, Bm08/Pm12	1
37	1017022	(000000-)	Detergent, Pkg, 2 Liter, Sgl [665]	2
37	1034126	(000000-)	Detergent, Pkg, 2 Liter, Sgl [965, Tco]	2
38	1005302	(000000-)	Filter, In- Line, Pf06/Pf06 080Mesh 02.6L	1
39	150538	(000000-)	Fitting, Plstc, Str, Bm06/Pm06	2
40	01684	(000000-)	Washer, Flat, 0.27B 0.69D .05, Ss	2
41	1049254	(000000-)	Fitting, Nyl, Qdc, E90, Bm08/ Qm10	1
42	1049259	(000000-)	Fitting, Nyl, Qdc, E90, Bm06/ Qm10	1

Fig. 10 - FaST Solution Supply Group

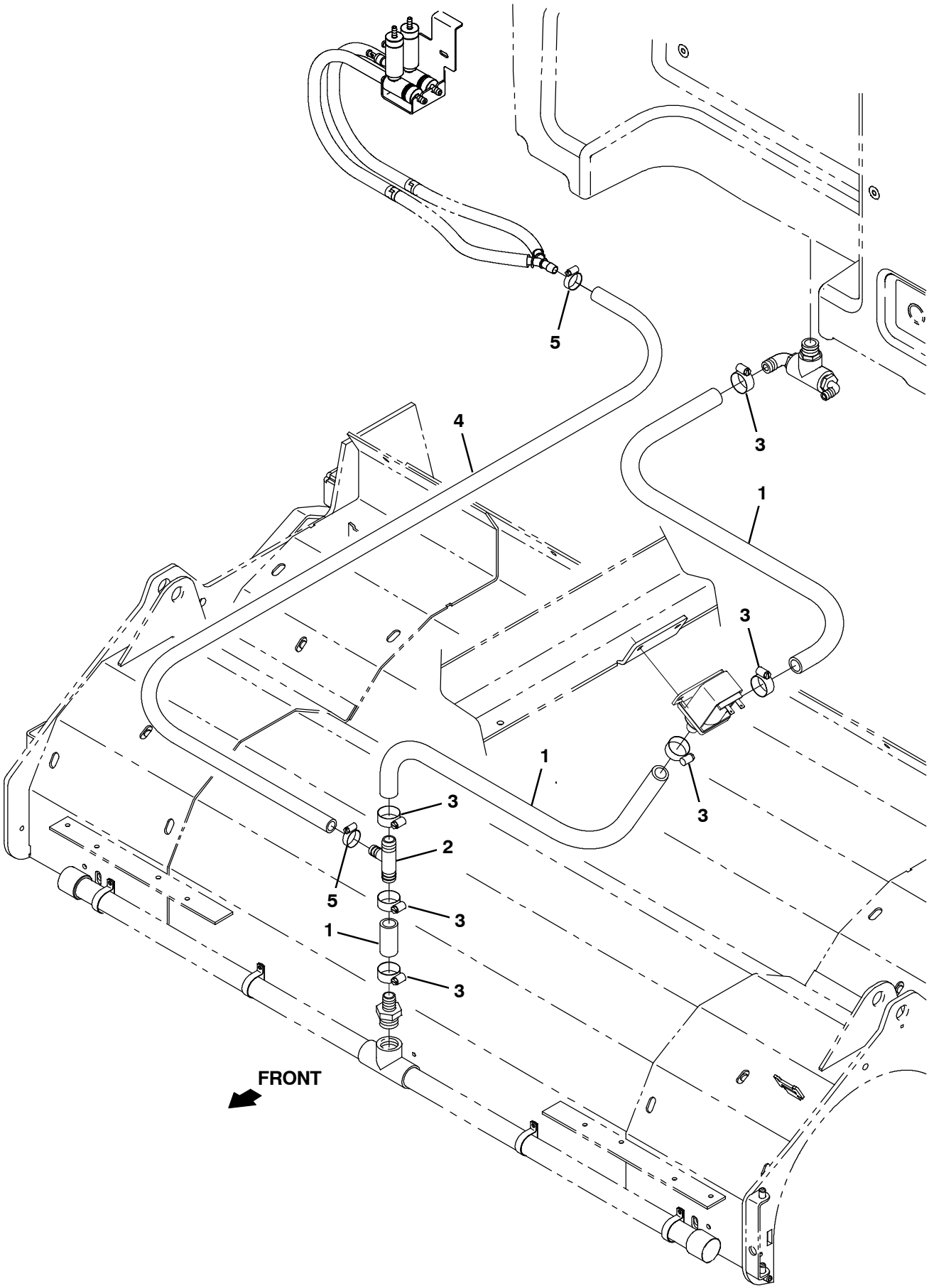

354722

Fig. 10 - FaST Solution Supply Group

Ref.	Part No.	Serial Number	Description	Qty.
1	1015045	(000000- 004690)	Hose, Afmkt, Pvc, Brd, 0.75id, 08ft, Clr	1
1	1015032	(004691-)	Hose, Afmkt, Pvc, Brd, 0.62id, 08ft, Clr	1
2	385644	(000000- 004690)	Fitting, Plstc, Tee, Bm08/Bm12/Bm12, Br	1
2	1015486	(004691-)	Fitting, Plstc, Tee, Bm08/Bm10/Bm10, Br	1
3	63810	(000000-)	Clamp, Hose, Wormdrive, 0.56- 1.06d, .56w	6
4	1011412	(000000-)	Hose, Afmkt, Pvc, Brd, 0.50id, 08ft, Clr	1
5	54333	(000000-)	Clamp, Hose, Wormdrive, 0.31- 0.88d, .31w	2

Fig. 11 - FaST Solution Supply Group, Side Brush

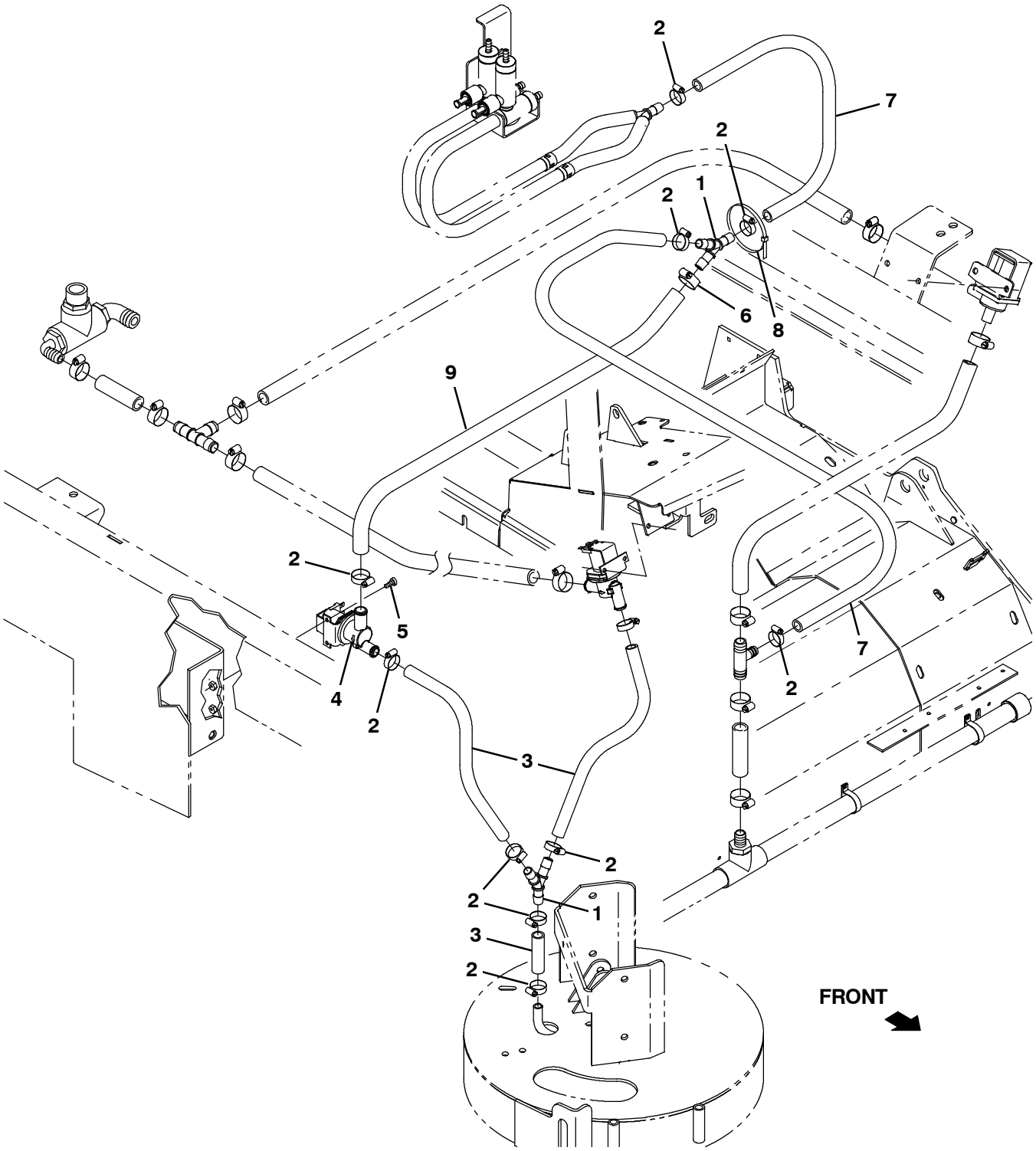

354723

Fig. 11 - FaST Solution Supply Group, Side Brush

Ref.	Part No.	Serial Number	Description	Qty.
1	1010668	(000000-)	Fitting, Plstc, Y, Bm08/Bm08/Bm08, Nyl	2
2	54333	(000000-)	Clamp, Hose, Wormdrive, 0.31- 0.88d, .31w	10
3	1015067	(000000-)	Hose, Afmkt, Pvc, Clr, 0.50id, 08ft	1
4	1037825	(000000-)	Valve, Solenoid, 12vdc, Water Flow	1
5	24196	(000000-)	Screw, Pan, Phl, M5 X 0.80 X 20, Ss	2
6	63810	(000000-)	Clamp, Hose, Wormdrive, 0.56- 1.06d, .56w	1
7	1011412	(000000-)	Hose, Afmkt, Pvc, Brd, 0.50id, 08ft, Clr	1
8	763116	(000000-)	Tie, Cable, Nyl, 15.3l . W 4.5 Max D	1
9	31543	(000000-)	Hose, Heater, E90, 0.62id, 24.0 4.0	1

Fig. 12 - FaST Wire Harness Group

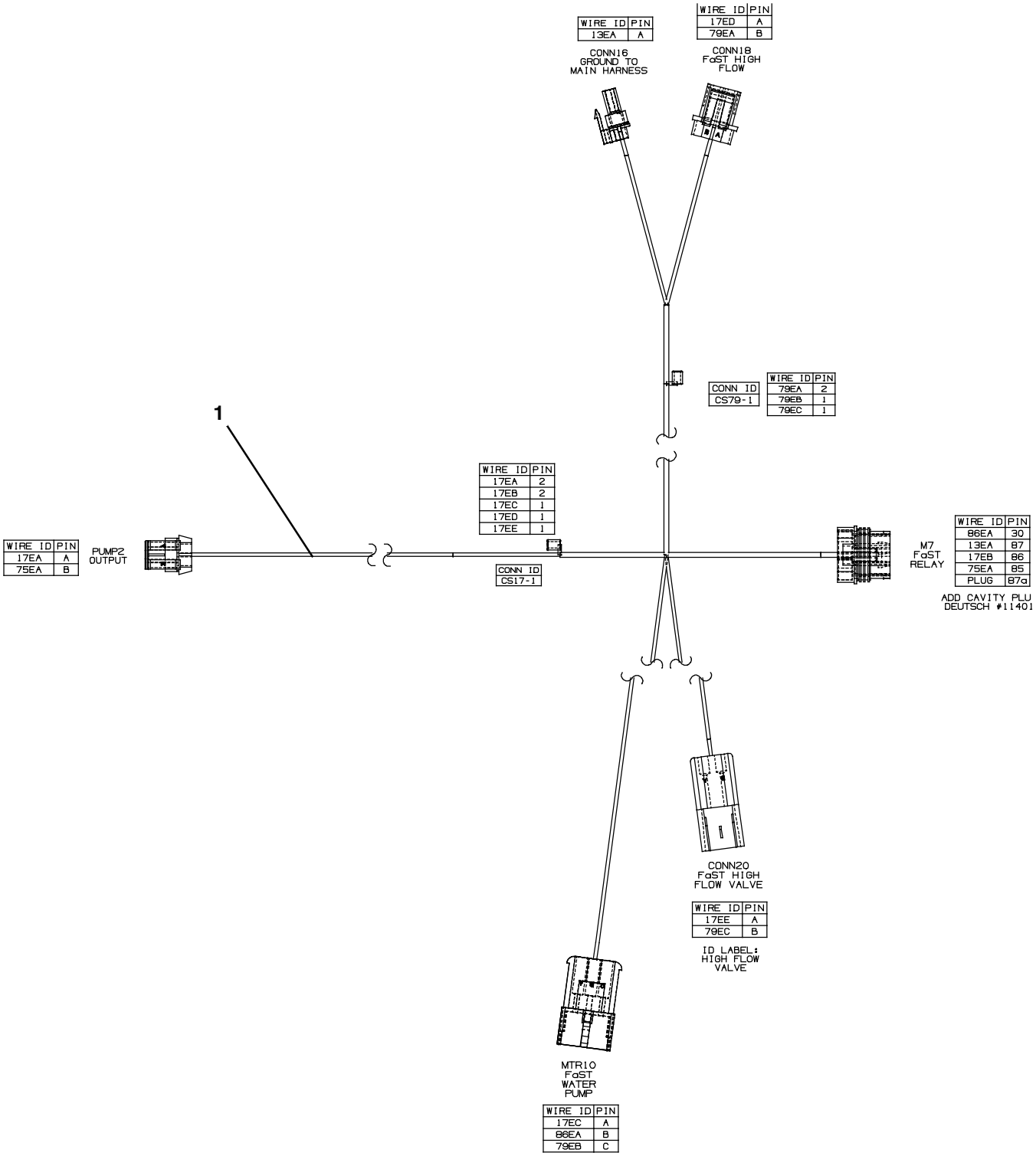

354724

Fig. 12 - FaST Wire Harness Group

Ref.	Part No.	Serial Number	Description	Qty.
1	1037809	(000000-)	Harness, Wire [FaST Gen 2]	1

Fig. 13 - ec-H20 Solution Pump Group

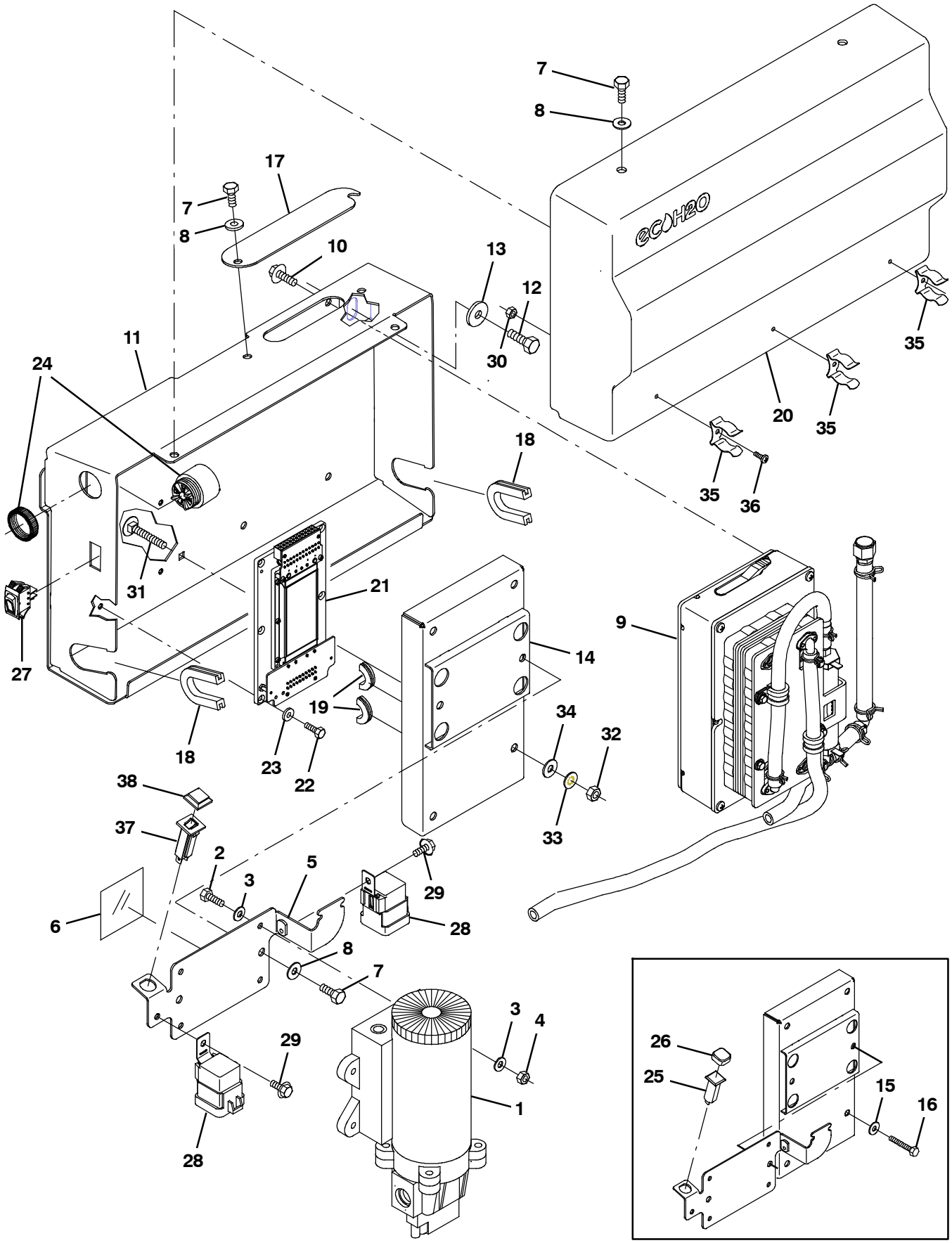

356033

Fig. 13 - ec-H20 Solution Pump Group

Ref.	Part No.	Serial Number	Description	Qty.
1	1060624	(000000-)	Pump, Soltn, Ele, 13.7vdc,12/28psi	1
2	09252	(000000-)	Screw, Hex, M5 X 0.80 X 20, 8.8	4
3	19066	(000000-)	Washer, Flat, 10	8
4	06549	(000000-)	Nut, Hex, Lock, M5 X 0.80, Nl	4
5	1060273	(000000-)	Plate, Mtg, Pump	1
6	1059677	(000000-)	Strip, Rbr, 0.06 03.54w 03.5l [Neo/60]	1
7	09744	(000000-)	Screw, Hex, M6 X 1.00 X 12, Ss	6
8	01684	(000000-)	Washer, Flat, 0.27b 0.69d .05, Ss	6
9	9007882	(000000-)	Module Kit, Replmt [Ec-H20] (See Breakdowns)	1
10	1040467	(000000-)	Screw, Hex, M6 X 1.00 X 20, 9.8, Sems	4
11	1060292	(000000-)	Plate Wldt, Mtg	1
12	09740	(000000-)	Screw, Hex, M8 X 1.25 X 20, Ss	2
13	1017218	(000000-)	Washer, Flat, 0.32b 1.00d .12, Ss	2
14	1060185	(000000-)	Cover Wldt, Power Supply	1
15	01684	(000000- xxxxxx)	Washer, Flat, 0.27b 0.69d .05, Ss	4
16	07805	(000000- xxxxxx)	Screw, Hex, M6 X 1.00 X 35, Ss	4
17	1060291	(000000-)	Plate, Inspection	1
18	1020168	(000000-)	Molding, Afmkt, Trim, Pvc, .08 .11, 01Ft	1
19	10632-4	(000000-)	Grommet, Rbr, 0.62id, F/0.9h, .06 Matl	1
20	1060719	(000000-)	Cover, Trimmed	1
21	1058963	(000000-)	Converter, Ele, 12-36 Vdc	1
22	09206	(000000-)	Screw, Hex, M4 X 0.70 X 12, 8.8	4
23	19065	(000000-)	Washer, Flat, 08	4
24	1052726	(000000-)	Alarm, 9-48vdc, 95 Db(A) [Ec-H20]	1
25	1053078	(000000- 001645)	Circuitbreaker, 2.0a, Resetable	1
26	1046173	(000000- 001645)	Boot, Circuitbreaker	1
27	1044393	(000000-)	Switch, Rocker, Spst, Mom	1
28	56186	(000000-)	Relay, 12vdc, 040a, Spdt No	2
29	223198	(000000-)	Screw, Hex, M5 X 0.80 X 10, Fmg	2
30	33932	(000000-)	Nut, Hex, Lock, M4 X 0.70, Nl, Ss	3
31	1062804	(xxxxxx-)	Bolt, Carriage, M06 X 1.00 X 40, 4.6	4
32	41359	(xxxxxx-)	Nut, Hex, Std, M6 X 1.00, 8	4
33	32982	(xxxxxx-)	Washer, Lock, Int, 0.25	4
34	32483	(xxxxxx-)	Washer, Flat, 0.25, Sae	4
35	1029057	(000000-)	Clip, Grip, Finger, 0.88-1.25d	3
36	12323	(000000-)	Screw, Pan, Phl, M4 X 0.70 X 20, Ss	3
37	1064183	(001646-)	Circuitbreaker, 02.0a, Resetable	1
38	1064191	(001646-)	Boot, Circuitbreaker	1

Fig. 14 - ec-H20 Solution Pump Supply Group

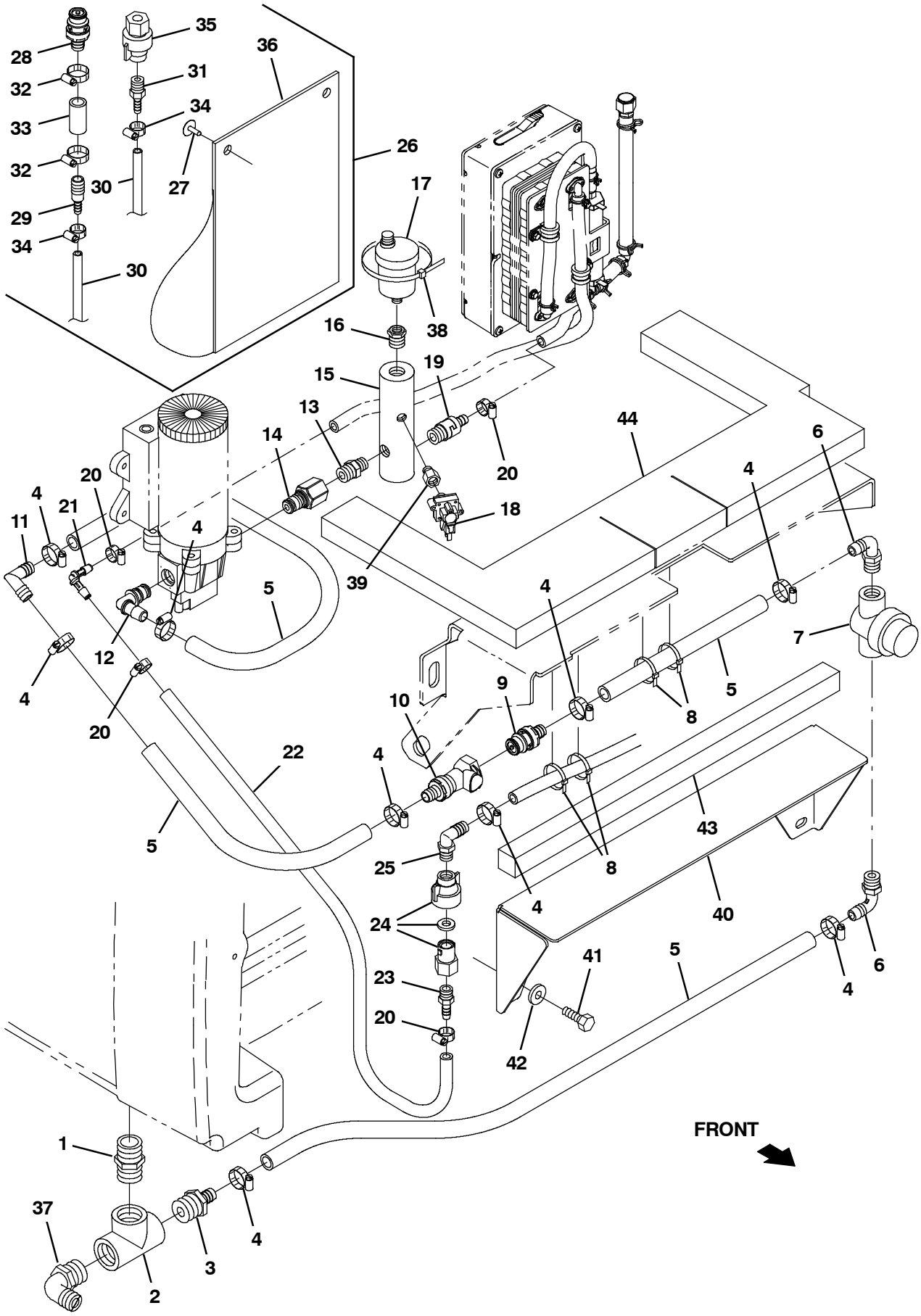

356045

Fig. 14 - ec-H20 Solution Pump Supply Group

	Ref.	Part No.	Serial Number	Description	Qty.
	1	24544	(000000-)	Fitting, Plstc, Str, Pm12/Pm12 1.60l	1
	2	42133A	(000000-)	Fitting, Plstc, Tee, Pf12/Pf12/Pf12	1
	3	79273-1	(000000-)	Fitting, Plstc, Str, Bm08/Pm12	1
	4	54333	(000000-)	Clamp, Hose, Wormdrive, 0.31-0.88d, .31w	9
	5	1011412	(000000-)	Hose, Afmkt, Pvc, Brd, 0.50id, 08ft, Clr	1
	6	64778	(000000-)	Fitting, Plstc, E90, Bm08/Pm06	2
	7	1005302	(000000-)	Filter, In-Line, Pf06/Pf06 080mesh 02.6l	1
	8	763116	(000000-)	Tie, Cable, Nyl, 15.3l . W 4.5 Max D	4
	9	1017415	(000000-)	Insert, Cplg, Qm, Bm08	1
	10	1017413	(000000-)	Housing, Cplg, Qf / Pm08	1
	11	63987-1	(000000-)	Fitting, Plstc, E90, Bm08/Bm08	1
	12	1049254	(000000-)	Fitting, Nyl, Qdc, E90, Bm08/ Qm10	1
	13	1059372	(000000-)	Fitting, Plstc, Str, Pf06/Qm10, Pvc	1
	14	1005219	(000000-)	Fitting, Plstc, Str, Pm04/Pm06, Nyl	1
	15	1060596	(000000-)	Manifold, Water	1
	16	24698	(000000-)	Fitting, Brs, Str, Pf02/Pm06	1
	17	1017386	(000000-)	Valve, Vent, Air, Float Type	1
	18	1058935	(000000-)	Switch, Press, 50 Psi, Pm02	1
	19	1060693	(000000-)	Valve, Check, 0005psi Pm04/Bm06	1
	20	43844	(000000-)	Clamp, Hose, Wormdrive, 0.25-0.62d, .31w	4
	21	1059391	(000000-)	Fitting, Plstc, E90, Bm05/Bm05, Nyl	1
	22	1052336	(000000-)	Hose, Afmkt, PVC, Brd, 0.31Id, 03Ft, Clr	2
	23	1052017	(000000-)	Fitting, Plstc, Str, Bm05/Pm04	1
	24	1071280	(000000-)	Fitting Assy, Qdc, Pf04	1
	25	65581	(000000-)	Fitting, Plstc, E90, Bm08/Pm04	1
▽	26	9014281	(000000-)	ec-H2O Kit, Flush, Replmt[M20, M30&T20]	1
▲	27	72968	(000000-)	Rivet, Plstc, .250d X 0.90	2
▲	28	1017415	(000000-)	Insert, Cplg, Qm, Bm08	1
▲	29	630164	(000000-)	Fitting, Plstc, Str, Bm04/Bm08	1
▲	30	1006415	(000000-)	Hose, Afmkt, Pvc, Clr, 0.25id, 03ft	2
▲	31	50901	(000000-)	Fitting, Plstc, Str, Bm04/Pm04	1
▲	32	54333	(000000-)	Clamp, Hose, Wormdrive, 0.31-0.88d, .31w	2
▲	33	1011403	(000000-)	Hose, Afmkt, Pvc, Brd, 0.50id, 01ft, Clr	1
▲	34	43844	(000000-)	Clamp, Hose, Wormdrive, 0.25-0.62d, .31w	2
▲	35	1071280	(000000-)	Fitting Assy, Qdc, Pf04	1
▲	36	48790	(000000-)	Pouch	1
	37	14877	(000000-004690)	Fitting, Plstc, E90, Bm12/Pm12	1
	37	73468	(004691-)	Fitting, Plstc, E90, Bm10/Pm12	1
	38	49266	(000000-)	Tie, Cable, Nyl, 07.3l .19w 1.8 Max D	1
	39	1062403	(000000-)	Fitting, Brs, Snubber, Pm02/Pf02	1
	40	1060290	(000000-)	Plate, Sppt	1
	41	09740	(000000-)	Screw, Hex, M8 X 1.25 X 20, Ss	2
	42	1017218	(000000-)	Washer, Flat, 0.32b 1.00d .12, Ss	2
	43	1060845	(000000-)	Insulation, Acstc, Rear	1
	44	1060386	(000000-)	Insulation, Acstc, Adh	1

Fig. 15 - ec-H20 Solution Supply Group

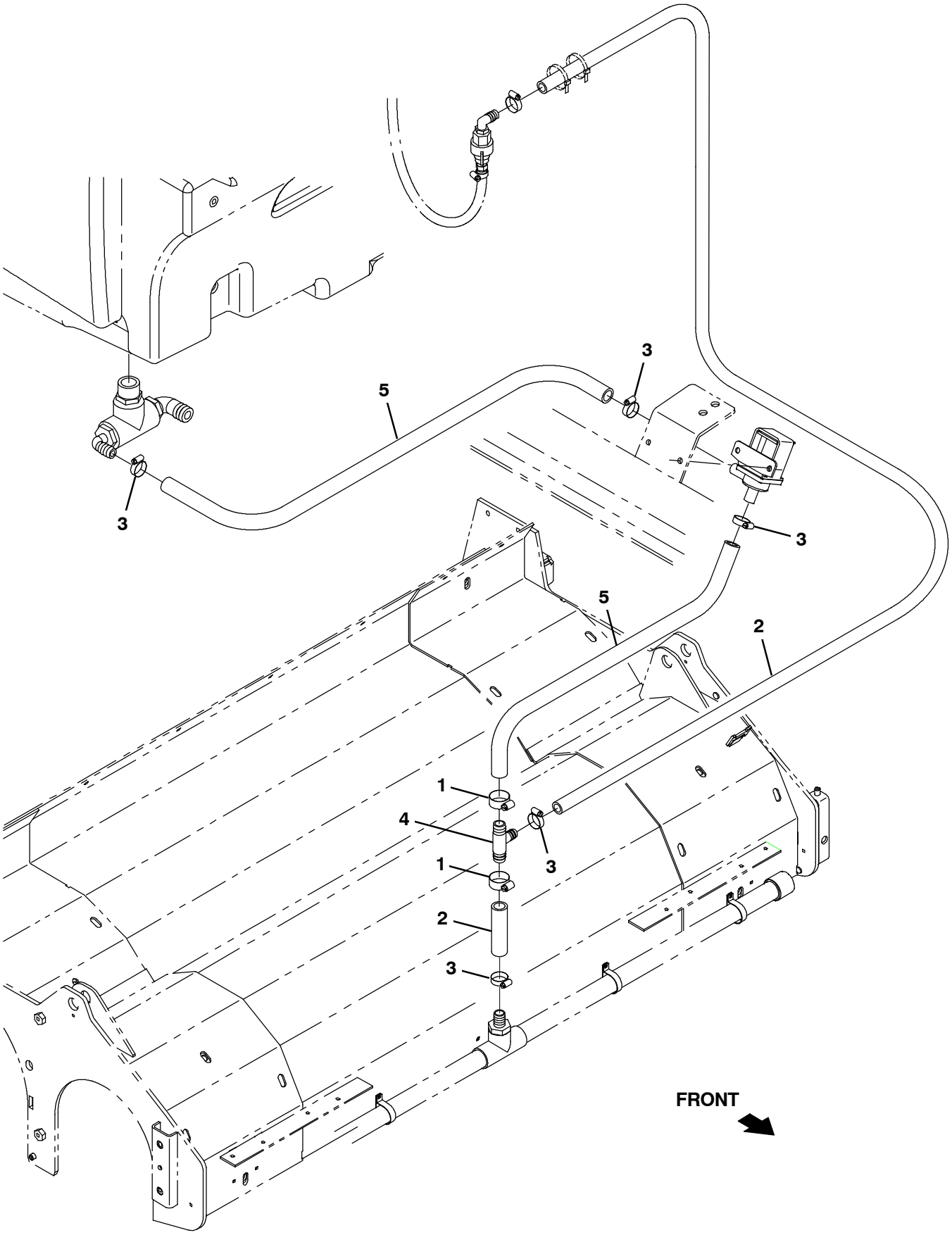

356043

Fig. 15 - ec-H20 Solution Supply Group

Ref.	Part No.	Serial Number	Description	Qty.
1	63810	(000000-)	Clamp, Hose, Wormdrive, 0.56-1.06d, .56w	2
2	1011837	(000000-)	Hose, Afmkt, Pvc, Brd, 0.50id, 12ft, Clr	1
3	54333	(000000-)	Clamp, Hose, Wormdrive, 0.31-0.88d, .31w	5
4	385644	(000000-004690)	Fitting, Plstc, Tee, Bm08/Bm12/Bm12, Br	1
4	1015486	(004691-)	Fitting, Plstc, Tee, Bm08/Bm10/Bm10, Br	1
5	1015045	(000000-004690)	Hose, Afmkt, Pvc, Brd, 0.75id, 08ft, Clr	1
5	1015032	(004691-)	Hose, Afmkt, Pvc, Brd, 0.62id, 08ft, Clr	1

Fig. 16 - ec-H20 Solution Supply Group with Side Brush

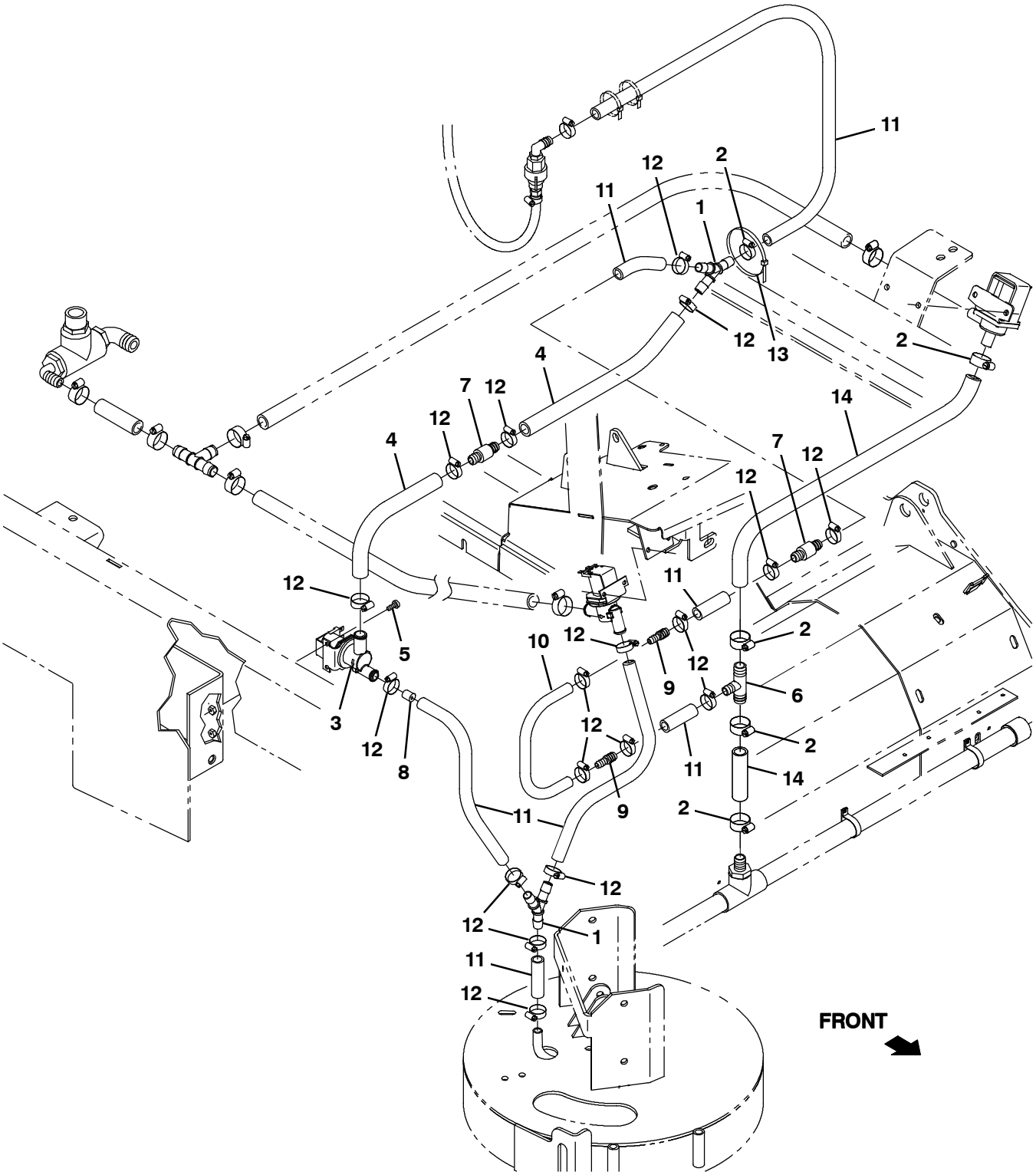

356044

Fig. 16 - ec-H20 Solution Supply Group with Side Brush

Ref.	Part No.	Serial Number	Description	Qty.
1	1010668	(000000-)	Fitting, Plstc, Y, Bm08/Bm08/Bm08, Nyl	1
2	63810	(000000-)	Clamp, Hose, Wormdrive, 0.56-1.06d, .56w	4
3	1037825	(000000-)	Valve Assy, Water, Solenoid, 12vdc	1
4	31543	(000000-)	Hose, Heater, E90, 0.62id, 24.0 4.0	1
5	24196	(000000-)	Screw, Pan, Phl, M5 X 0.80 X 20, Ss	2
6	385644	(000000-004690)	Fitting, Plstc, Tee, Bm08/Bm12/Bm12, Br	1
6	1015486	(004691-)	Fitting, Plstc, Tee, Bm08/Bm10/Bm10, Br	1
7	1010614	(000000-)	Valve, Check, 2gpm .5psi Bm08/Bm08	2
8	1061045	(000000-)	Plug, Restrictor	1
9	222375	(000000-)	Fitting, Plstc, Str, Bm06/Bm08	2
10	1014974	(000000-)	Hose, Afmkt, Pvc, Brd, 0.38id, 02ft, Clr	1
11	1011412	(000000-)	Hose, Afmkt, Pvc, Brd, 0.50id, 08ft, Clr	1
12	54333	(000000-)	Clamp, Hose, Wormdrive, 0.31-0.88d, .31w	18
13	763115	(000000-)	Tie, Cable, 6.0l, 1.25d Max	1
14	1015026	(004691-)	Hose, Afmkt, Pvc, Brd, 0.62id, 03ft, Clr	1

Fig. 17 - ec-H20 Wire Harnesses Group

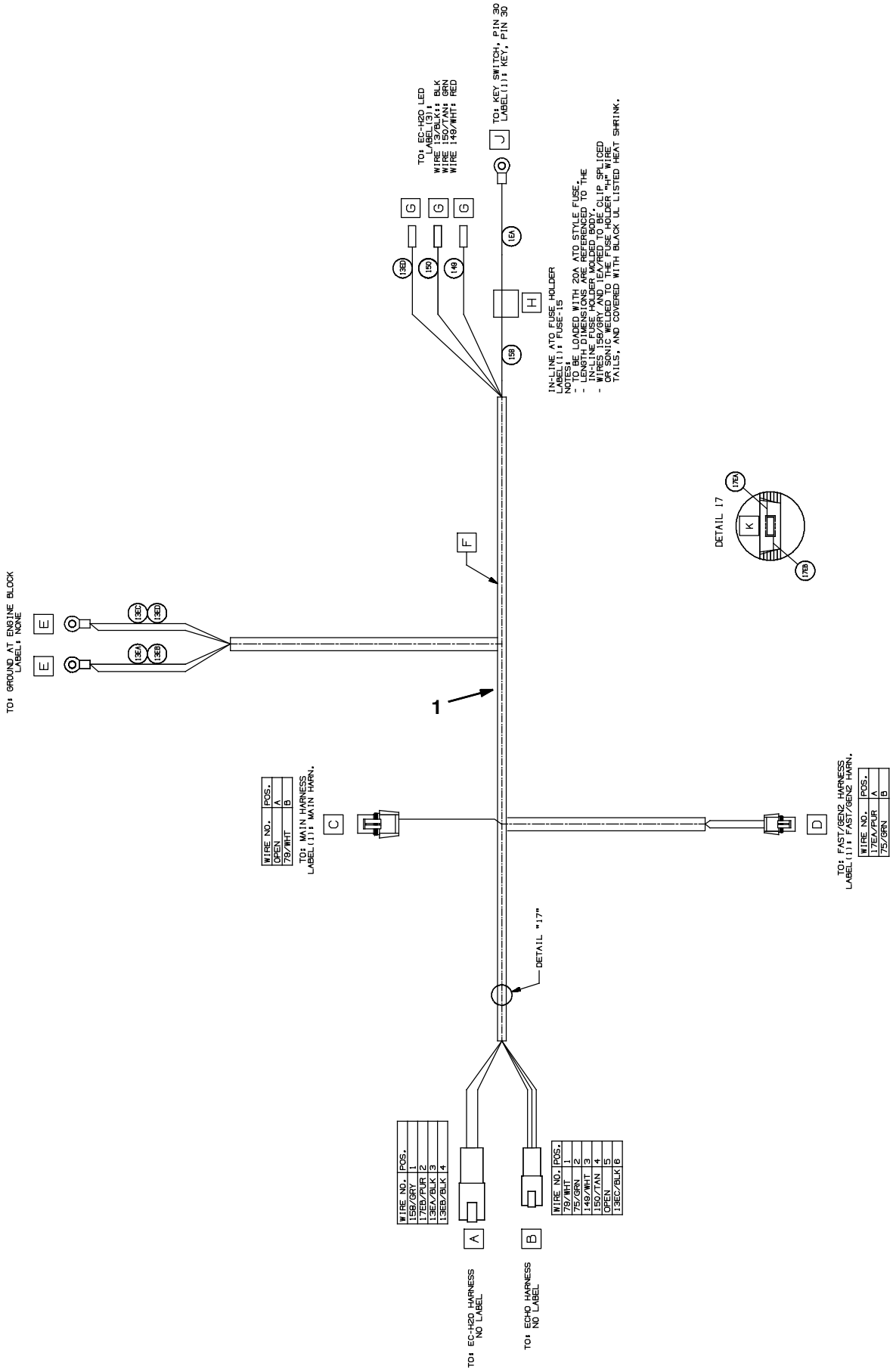

Fig. 17 - ec-H20 Wire Harnesses Group

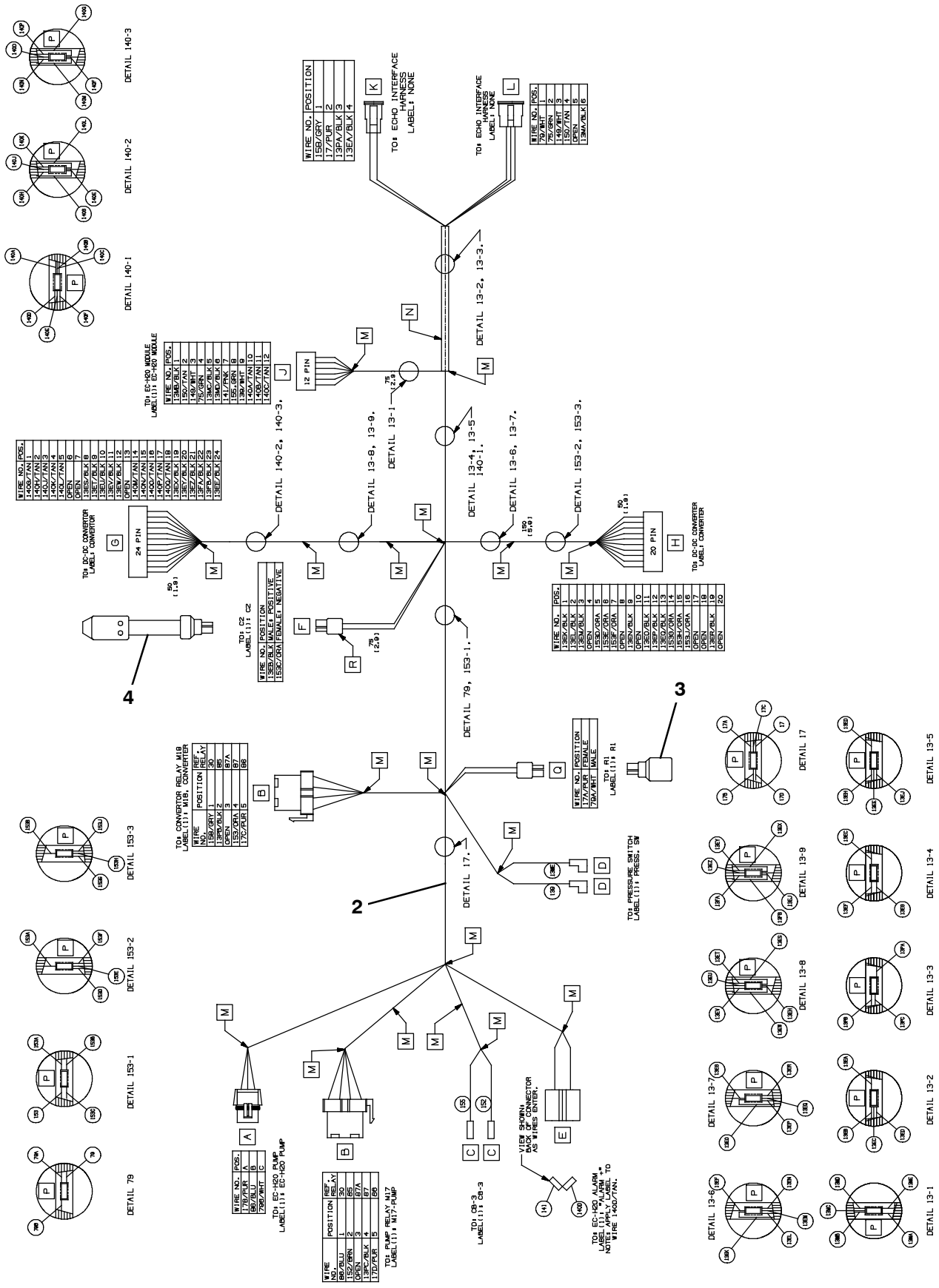

356038

Fig. 17 - ec-H20 Wire Harnesses Group

Ref.	Part No.	Serial Number	Description	Qty.
1	1071947	(000000-)	Harness, Wire [Ec-H2o, Mako, 2.0l & Dsl]	1
2	1060871	(000000-)	Harness, Wire [Ec-H2o]	1
3	1060880	(000000-)	Resistor, Ele, Plug [430 , 2w]	1
4	1060881	(000000-)	Capacitor, Plug [4700uf, 25v]	1

Fig. 18 - Backup Alarm Kit

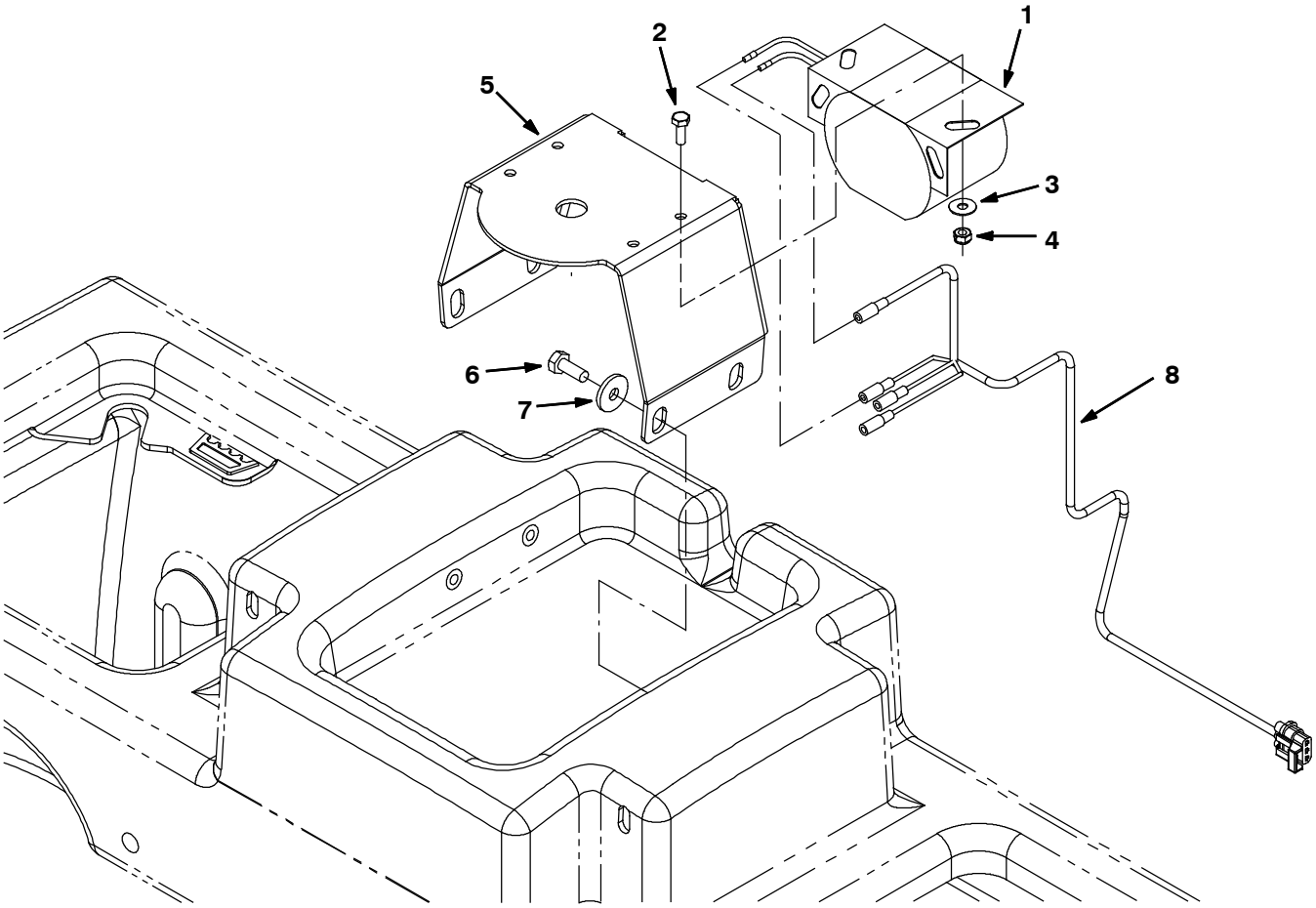

354473

	Ref.	Part No.	Serial Number	Description	Qty.
▽		9001321	(000000-)	Alarm Kit, Backup, Ci [M20/T20/M30]	1
▲	1	9007131	(000000-)	Alarm Assy, Backup, 12/48Vdc	1
▲	2	24196	(000000-)	Screw, Pan, Phl, M5 X 0.80 X 20, Ss	2
▲	3	19066	(000000-)	Washer, Flat, 10	2
▲	4	09739	(000000-)	Nut, Hex, Lock, M5 X 0.80, Nl, Ss	2
▲	5	1019445	(000000-)	Bracket, Sppt, Strobe Light	1
▲	6	09740	(000000-)	Screw, Hex, M8 X 1.25 X 20, Ss	4
▲	7	1017218	(000000-)	Washer, Flat, 0.32b 1.00d .12, Ss	4
▲	8	1019971	(000000-)	Harness, Warning / Backup [M20 & T20]	1

Fig. 19 - Light Kit, Flashing

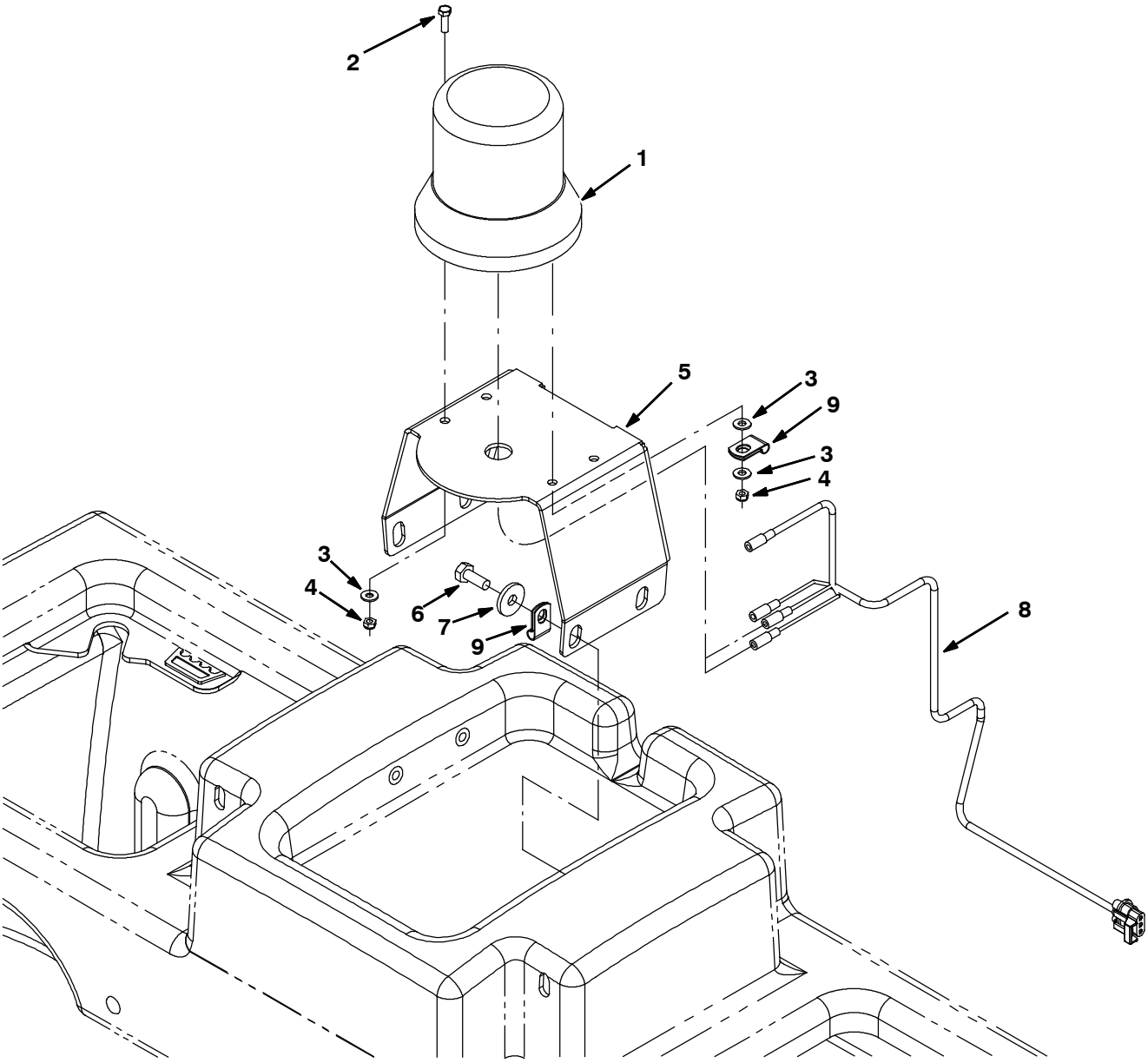

354475

Fig. 19 - Light Kit, Flashing

	Ref.	Part No.	Serial Number	Description	Qty.
▽		9001327	(000000-)	Light Kit, Flsh, Ci [M20 / T20 / M30]	1
▲▽	1	1017248	(000000-)	Light, Flsh, Amb, 12- 48vdc	1
▲▲		9000879	(000000-)	Lens, Amb, F/ Strobe / Flasher	1
▲▲		9000846	(000000-)	Lamp, Bulb, Flsh	1
▲		55272	(000000-)	Terminal, Bullet, Mal, .157d, 12ga	2
▲	2	24196	(000000-)	Screw, Pan, Phl, M5 X 0.80 X 20, Ss	2
▲	3	19066	(000000-)	Washer, Flat, 10	2
▲	4	09739	(000000-)	Nut, Hex, Lock, M5 X 0.80, Nl, Ss	2
▲	5	1019445	(000000-)	Bracket, Sppt, Strobe Light	1
▲	6	09740	(000000-)	Screw, Hex, M8 X 1.25 X 20, Ss	4
▲	7	1017218	(000000-)	Washer, Flat, 0.32b 1.00d .12, Ss	4
▲	8	1019971	(000000-)	Harness, Warning / Backup [M20 & T20]	1
▲	9	46236	(000000-)	Clamp, Cable, Stl, 0.25d X 0.56w, 1hole	2
▲		1027800	(000000-)	Lens, Blu, F/ Strobe / Flasher	1
▲		1027798	(000000-)	Lens, Red, F/ Strobe / Flasher	1

Fig. 20 - Light Kit, Strobe

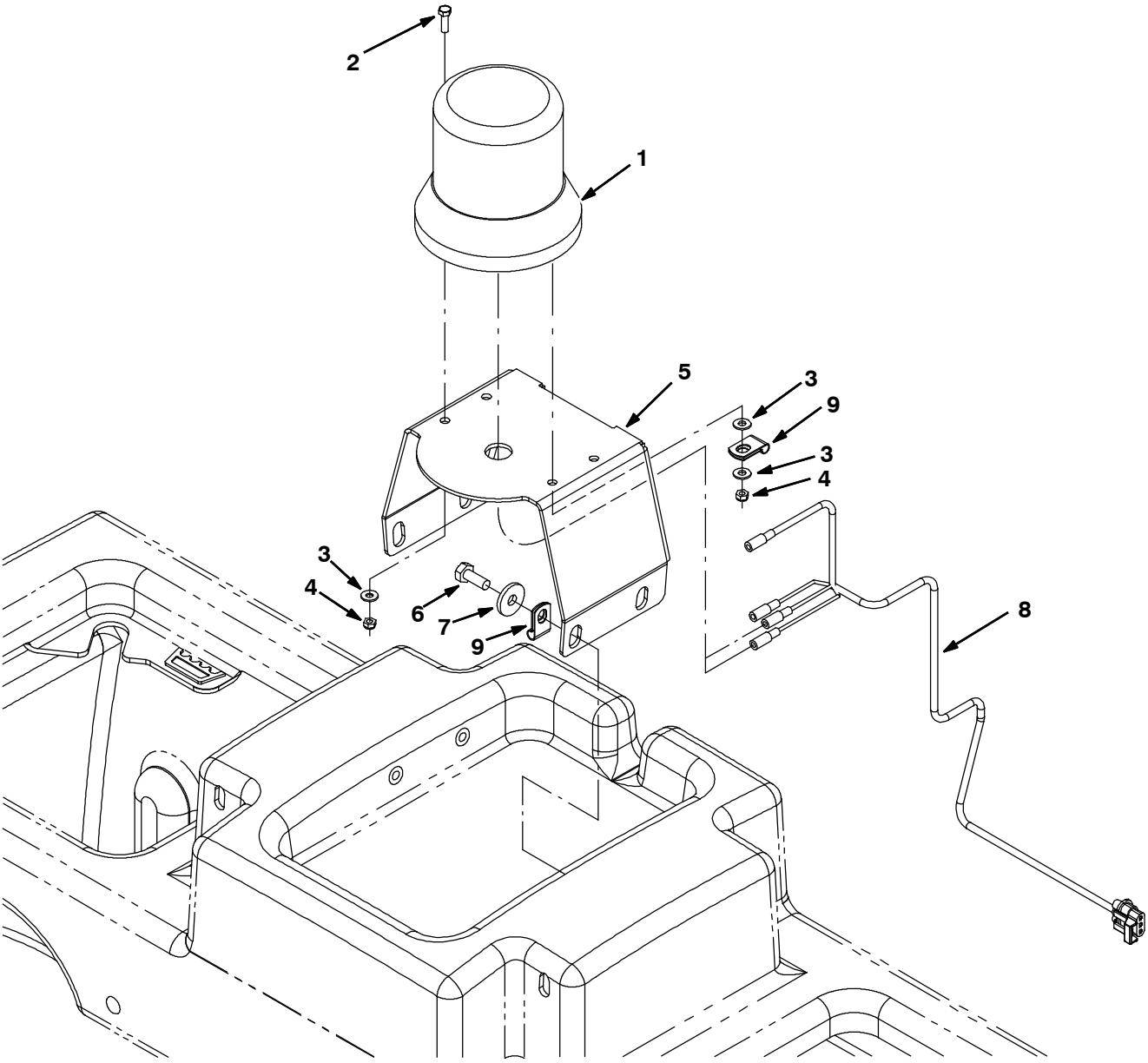

354475

Fig. 20 - Light Kit, Strobe

	Ref.	Part No.	Serial Number	Description	Qty.
▽		9001331	(000000-)	Light Kit, Strobe, Ci [M20 / T20 / M30]	1
▲▽	1	1017250	(000000-)	Light, Strobe, Amb, 12- 48vdc	1
▲▲		9000879	(000000-)	Lens, Amb, F/ Strobe / Flasher	1
▲▲		9000845	(000000-)	Lamp, Bulb, Strobe	1
▲		55272	(000000-)	Terminal, Bullet, Mal, .157d, 12ga	2
▲	2	24196	(000000-)	Screw, Pan, Phl, M5 X 0.80 X 20, Ss	2
▲	3	19066	(000000-)	Washer, Flat, 10	2
▲	4	09739	(000000-)	Nut, Hex, Lock, M5 X 0.80, Nl, Ss	2
▲	5	1019445	(000000-)	Bracket, Sppt, Strobe Light	1
▲	6	09740	(000000-)	Screw, Hex, M8 X 1.25 X 20, Ss	4
▲	7	1017218	(000000-)	Washer, Flat, 0.32b 1.00d .12, Ss	4
▲	8	1019971	(000000-)	Harness, Warning / Backup [M20 & T20]	1
▲	9	46236	(000000-)	Clamp, Cable, Stl, 0.25d X 0.56w, 1hole	2
▲		1027800	(000000-)	Lens, Blu, F/ Strobe / Flasher	1
▲		1027798	(000000-)	Lens, Red, F/ Strobe / Flasher	1

Fig. 21 - Light Kit, Flashing Overhead Guard

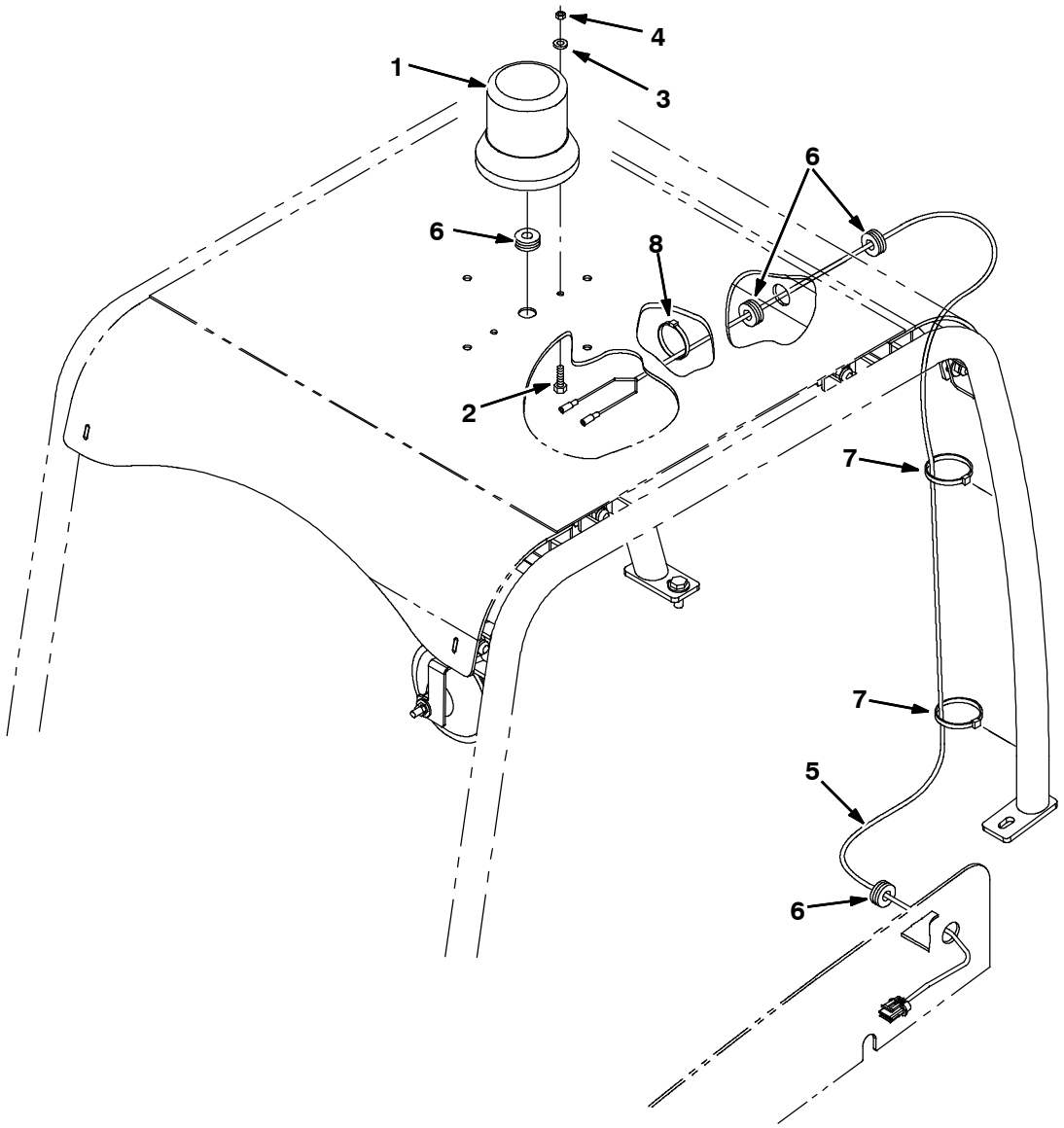

354477

	Ref.	Part No.	Serial Number	Description	Qty.
▽		9001718	(000000-)	Light Kit, Flsh, W/Ohg, Ci[M20/T20/M30]	1
▲▽	1	1017248	(000000-)	Light, Flsh, Amb, 12- 48vdc	1
▲▲		9000879	(000000-)	Lens, Amb, F/ Strobe / Flasher	1
▲▲		9000846	(000000-)	Lamp, Bulb, Flsh	1
▲		55272	(000000-)	Terminal, Bullet, Mal, .157d, 12ga	2
▲	2	24196	(000000-)	Screw, Pan, Phl, M5 X 0.80 X 20, Ss	2
▲	3	19066	(000000-)	Washer, Flat, 10	2
▲	4	09739	(000000-)	Nut, Hex, Lock, M5 X 0.80, Nl, Ss	2
▲	5	1019647	(000000-)	Harness, Warning / Ohg [M20]	1
▲	6	10632- 17	(000000-)	Grommet, Rbr, 0.50id, F/0.8h, .12 Matl	4
▲	7	763115	(000000-)	Tie, Cable, 6.0l, 1.25d Max	4
▲	8	49266	(000000-)	Tie, Cable, Nyl, 07.3l .19w 1.8 Max D	2
▲		1027800	(000000-)	Lens, Blu, F/ Strobe / Flasher	1
▲		1027798	(000000-)	Lens, Red, F/ Strobe / Flasher	1

Fig. 22 - Light Kit, Strobe Overhead Guard

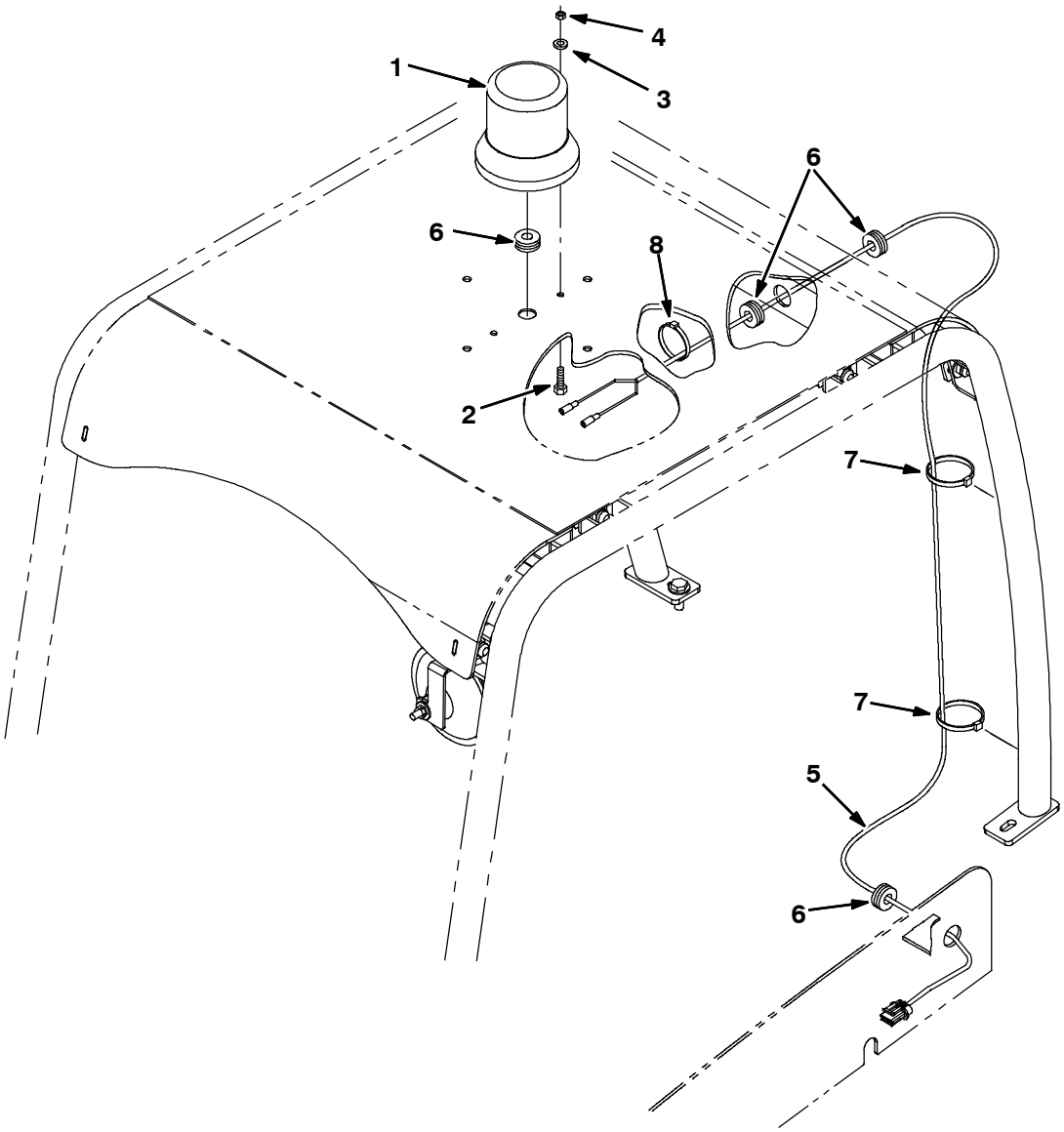

354477

	Ref.	Part No.	Serial Number	Description	Qty.
▽		9001717	(000000-)	Light Kit, Strobe, W/ Ohg, Ci[M20/T20/M30]	1
▲▽	1	1017250	(000000-)	Light, Strobe, Amb, 12- 48vdc	1
▲▲		9000879	(000000-)	Lens, Amb, F/ Strobe / Flasher	1
▲▲		9000845	(000000-)	Lamp, Bulb, Strobe	1
▲		55272	(000000-)	Terminal, Bullet, Mal, .157d, 12ga	2
▲	2	24196	(000000-)	Screw, Pan, Phl, M5 X 0.80 X 20, Ss	2
▲	3	19066	(000000-)	Washer, Flat, 10	2
▲	4	09739	(000000-)	Nut, Hex, Lock, M5 X 0.80, Nl, Ss	2
▲	5	1019647	(000000-)	Harness, Warning / Ohg [M20]	1
▲	6	10632- 17	(000000-)	Grommet, Rbr, 0.50id, F/0.8h, .12 Matl	4
▲	7	763115	(000000-)	Tie, Cable, 6.0l, 1.25d Max	4
▲	8	49266	(000000-)	Tie, Cable, Nyl, 07.3l .19w 1.8 Max D	2
▲		1027800	(000000-)	Lens, Blu, F/ Strobe / Flasher	1
▲		1027798	(000000-)	Lens, Red, F/ Strobe / Flasher	1

Fig. 23 - Overhead Guard Kit

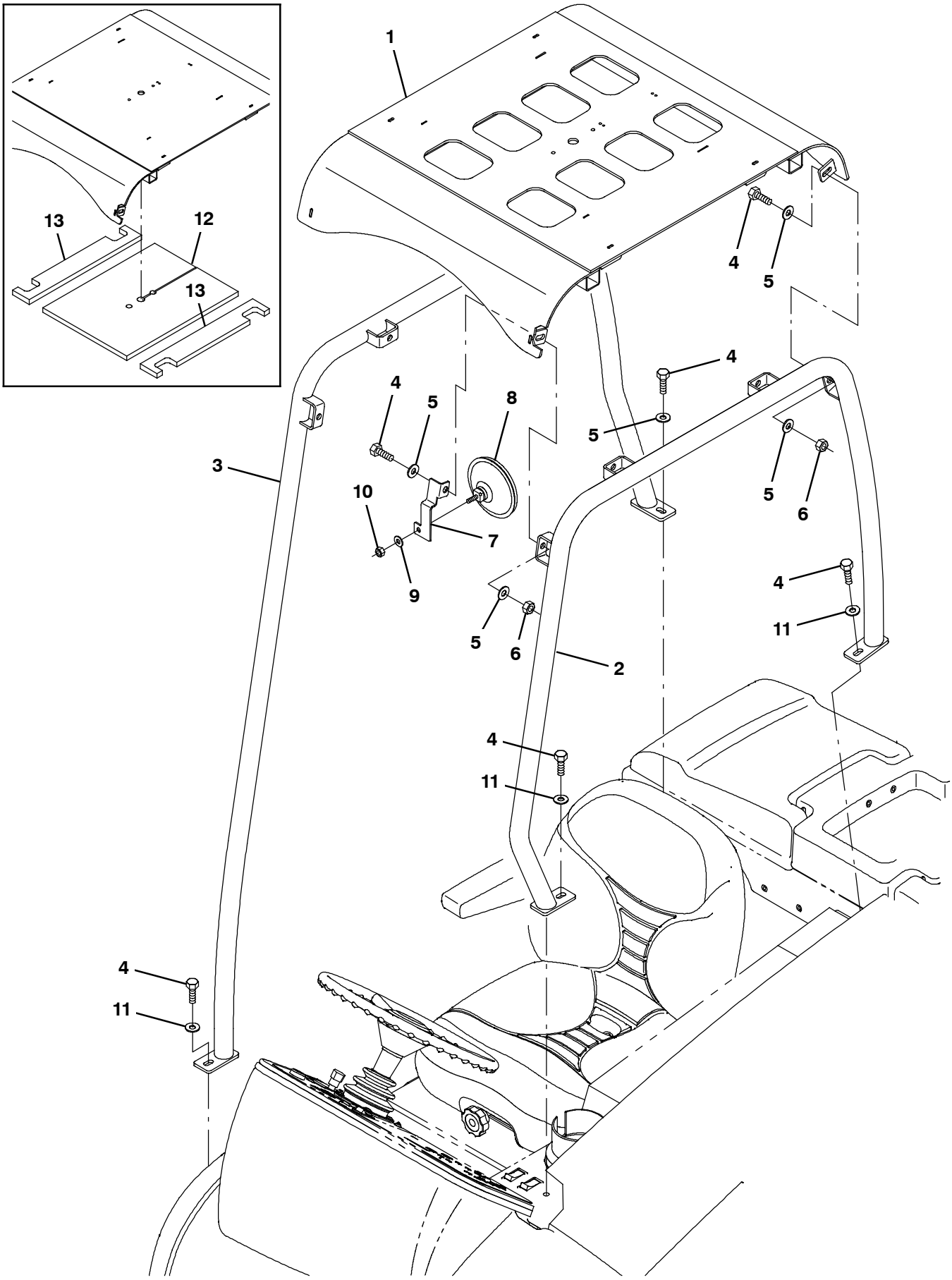

354478

Fig. 23 - Overhead Guard Kit

	Ref.	Part No.	Serial Number	Description	Qty.
▽		9001314	(000000-)	Ohg Kit, Ci [M20 And T20]	1
▲	1	1022276	(000000-)	Guard Wldt, Top, Ohg	1
▲	2	1069241	(000000-)	Tube Wldt, Leg, Ohg, Lh, Pntd	1
▲	3	1069253	(000000-)	Tube Wldt, Leg, Ohg, Rh, Pntd	1
▲	4	03192	(000000-)	Screw, Hex, M10 X 1.5 X 30, 8.8	12
▲	5	32492	(000000-)	Washer, Flat, 0.38 Std	17
▲	6	41430	(000000-)	Nut, Hex, Lock, M10 X 1.5, Nl	8
▲	7	1023879	(000000-)	Bracket, Mtg, Mirror, Rearview	1
▲	8	1050295	(000000-)	Mirror, Convex, 0.50D	1
▲	9	32491	(000000-)	Washer, Flat, 0.31, Std	1
▲	10	19313	(000000-)	Nut, Hex, Std, .31- 18	1
▲	11	1014563	(000000-)	Washer, Flat, 0.40b 1.12d .12, Ss	3
	12	1032830	(000000- 004475)	Insulation	1
	13	1032831	(000000- 004475)	Insulation	2

Fig. 24 - Telemetry Group

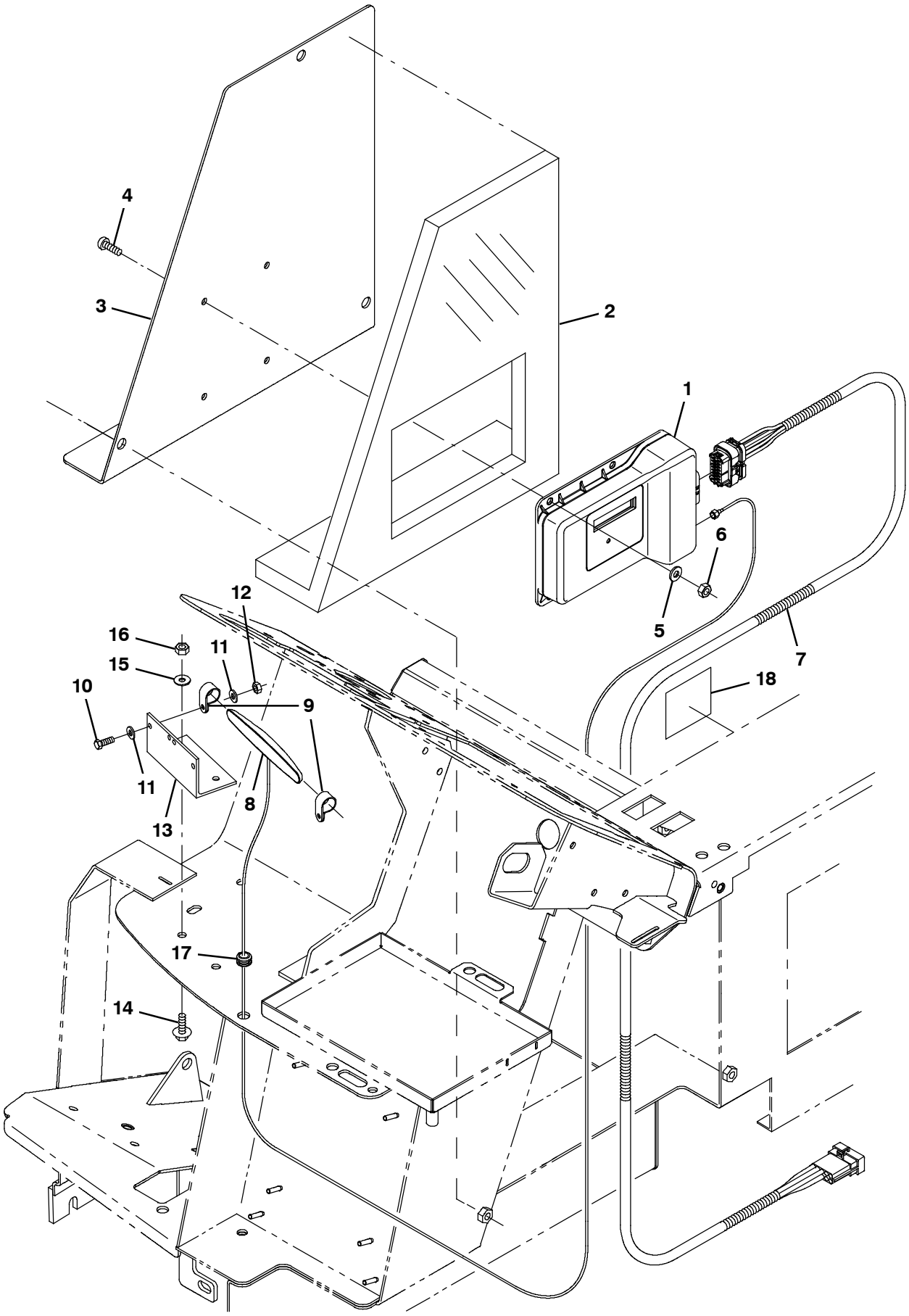

356267

Fig. 24 - Telemetry Group

Ref.	Part No.	Serial Number	Description	Qty.
1	9010085	(000000-)	Control Box Assy Kit, Replmt, Telem[Usa]	1
1	9010086	(000000-)	Control Box Assy Kit, Replmt, Telem[Can]	1
2	1069761	(000000-)	Insulation, Flame- Retardant, 0.75- 0.88	1
3	1069755	(000000-)	Panel, Access, Door	1
4	763147	(000000-)	Screw, Btn, M6 X 1.0 X 20, 10.9, Blk	4
5	32483	(000000-)	Washer, Flat, 0.25, Sae	4
6	08708	(000000-)	Nut, Hex, Lock, M6 X 1.00, Nl	4
7	1069662	(000000-)	Harness, Extn, Telem [M30]	1
8	1070324	(000000-)	Antenna, Telem, 110 In [Gprs]	1
9	140916	(000000-)	Clamp, Cable, Nyl, 0.62d, Nat	2
10	24199	(000000-)	Screw, Hex, M5 X 0.80 X 16, Ss	2
11	01683	(000000-)	Washer, Flat, 10, Ss	4
12	06549	(000000-)	Nut, Hex, Lock, M5 X 0.80, Nl	2
13	1070402	(000000-)	Angle, Mtg, Antenna, Telem	1
14	1040467	(000000-)	Screw, Hex, M6 X 1.00 X 20, 9.8, Sems	2
15	01684	(000000-)	Washer, Flat, 0.27b 0.69d .05, Ss	2
16	08712	(000000-)	Nut, Hex, Lock, M6 X 1.00, Nl, Ss	2
17	10632- 12	(000000-)	Grommet, Rbr, 0.38id, F/0.5h, .12 Matl	1
18	1069580	(000000-)	Label, Machine, Telem [Fcc, Usa, 2g/3g]	1

Fig. 25 - Vacuum Wand Kit

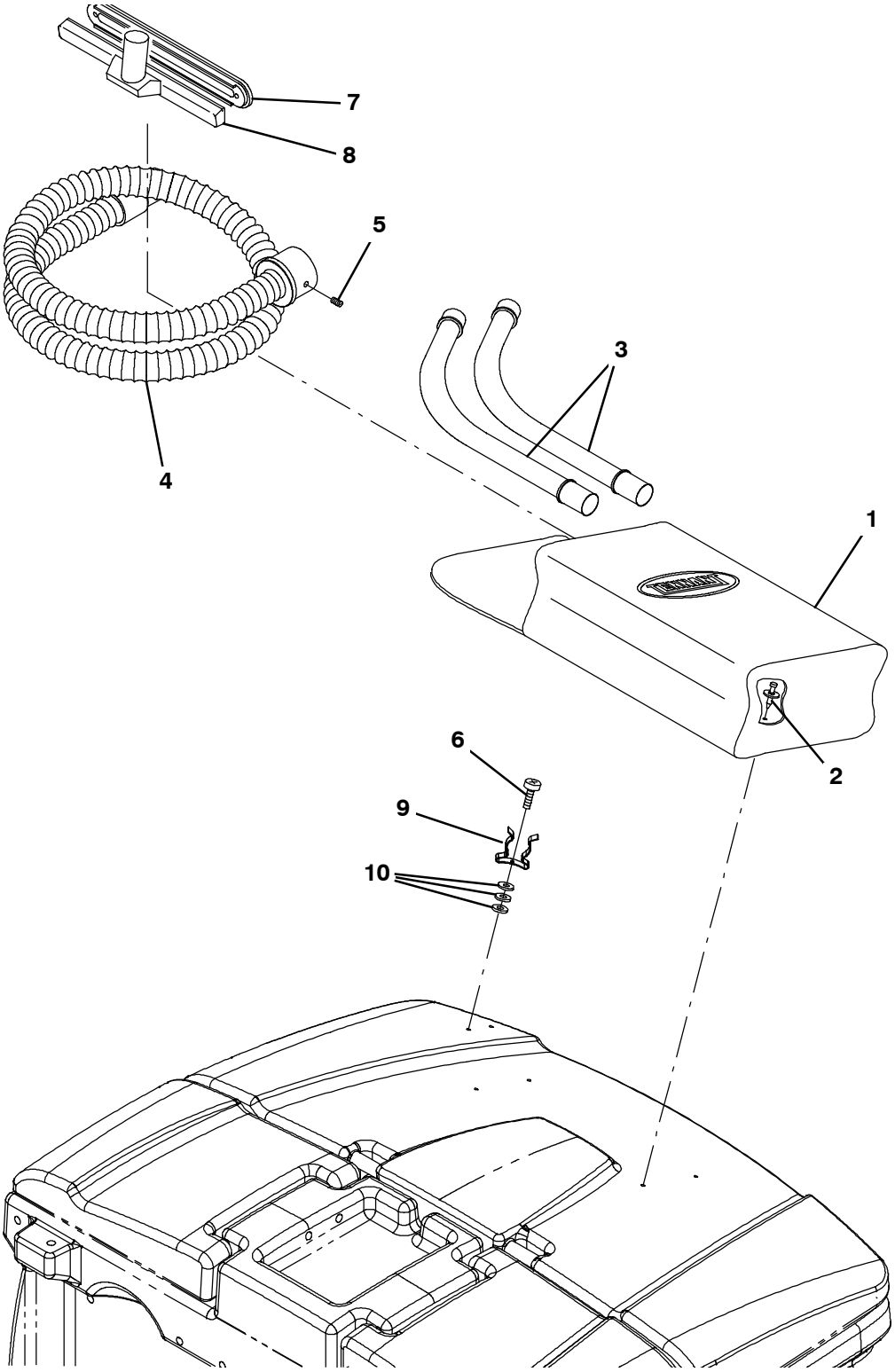

354659

Fig. 25 - Vacuum Wand Kit

	Ref.	Part No.	Serial Number	Description	Qty.
▽		9004071	(000000-)	Wand Kit, Vacuum, Sqge, Ci [M30]	1
▲	1	65580	(000000-)	Bag, Power	1
▲	2	72968	(000000-)	Rivet, Plstc, .250d X 0.90	4
▲	3	63448	(000000-)	Tube, Wand, Vacuum, Metal	1
▲	4	69657	(000000-)	Hose Assy, W/2cuff, 1.5d 084l [Vacwand]	1
▲	5	69659	(000000-)	Plunger	1
▲	6	55845	(000000-)	Screw, Hex, M5 X 0.80 X 16, Fmg	2
▲	7	63430	(000000-)	Shoe, Plstc, Sqge, 14.0	1
▲	8	63451	(000000-)	Nozzle, Wand, Plstc, 14.0l	1
▲	9	67004	(000000-)	Clip, Grip, Finger, 1.00- 1.88d White,Vyl	2
▲	10	19064	(000000-)	Washer, Flat, 06	6

Fig. 26 - Spray Nozzle Kit

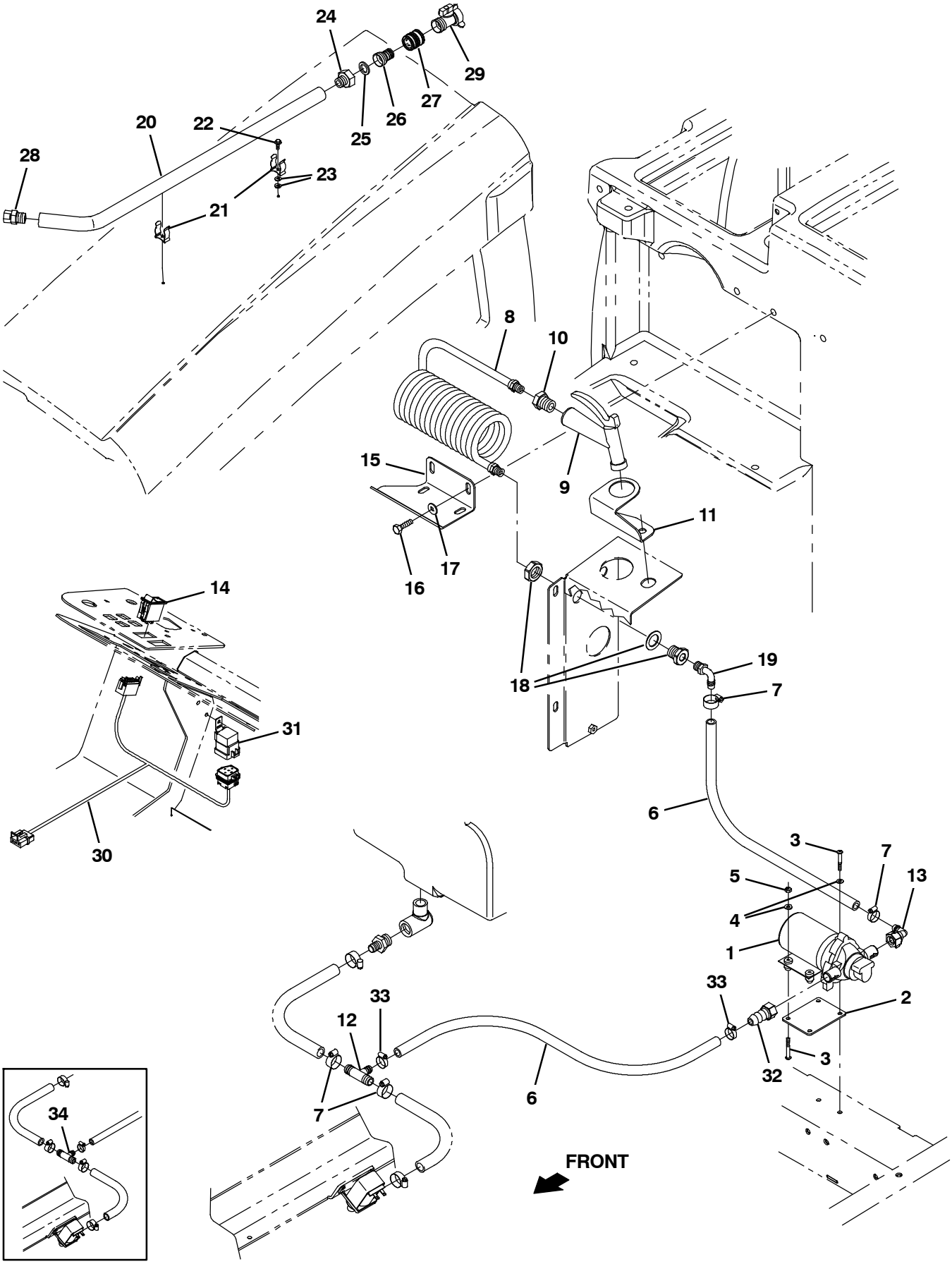

354480

Fig. 26 - Spray Nozzle Kit

	Ref.	Part No.	Serial Number	Description	Qty.
▽		9004031	(000000-)	Nozzle Kit, Spray, Ci [M30]	1
▲	1	1026743	(000000-)	Pump, Diaphragm (See Breakdowns)	1
▲	2	1027007	(000000-)	Plate, Mtg, Pump	1
▲	3	06939	(000000-)	Screw, Pan, Phl, M5 X 0.80 X 45, 4.8	4
▲	4	19066	(000000-)	Washer, Flat, 10	4
▲	5	06549	(000000-)	Nut, Hex, Lock, M5 X 0.80, Nl	2
▲	6	1011412	(000000-)	Hose, Afmkt, Pvc, Brd, 0.50Id, 08Ft, Clr	1
▲	7	63810	(000000-)	Clamp, Hose, Wormdrive, 0.56- 1.06d, .56w	4
▲	8	1019250	(000000-)	Hose, Water, Coil, 0.38id 0.56od	1
▲	9	769785	(000000-)	Nozzle, Spray, Gun	1
▲	10	1027976	(000000-)	Fitting, Brs, Str, Pf06/Pm12	1
▲	11	1027237	(000000-)	Bracket, Mtg, Spray Handle	1
▲	12	1015486	(004691-)	Fitting, Plstc, Tee, Bm08/Bm10/Bm10, Br	1
▲	13	1018499	(000000-)	Fitting, Plstc, E90, Bm08/Pf08s, Swivel	1
▲	14	398500	(000000-)	Switch, Rocker, Dpdt, On / None / On	1
▲	15	1029790	(000000-)	Bracket, Mtg, Spray Wand [FaST, Conv]	1
▲	16	09740	(000000-)	Screw, Hex, M8 X 1.25 X 20, Ss	2
▲	17	1017218	(000000-)	Washer, Flat, 0.32b 1.00d .12, Ss	2
▲	18	1027978	(000000-)	Fitting, Brs, Str, Pf06/Pf06 Bh	1
▲	19	64778	(000000-)	Fitting, Plstc, E90, Bm08/Pm06	1
▲	20	1029055	(000000-)	Wand, Clean- Out	1
▲	21	1029057	(000000-)	Clip, Grip, Finger, .875- 1.25	2
▲	22	20394	(000000-)	Screw, Hex, 10- 16 X 0.62, Fmg/Ab, Pl	2
▲	23	01683	(000000-)	Washer, Flat, 10, Ss	4
▲	24	375321	(000000-)	Fitting, Brs, Str, Pm08/Garden Hose	1
▲	25	01316	(000000-)	Washer, Flat, 0.66b 1.00d .12, Rbr	1
▲	26	1029153	(000000-)	Fitting, Brs, Spcl [Garden Hose]	1
▲	27	1029155	(000000-)	Coupling, Nozzle, Spray	1
▲	28	1029156	(000000-)	Nozzle	1
▲	29	1029399	(000000-)	Valve, Shutoff	1
▲	30	1021881	(000000-)	Harness, Spray, Nozzle	1
▲	31	56186	(000000-)	Relay, 12vdc, 040a, Spdt No	1
▲	32	1018495	(000000-)	Fitting, Plstc, Str, Bm08/Pf08s, Swivel	1
▲	33	54333	(000000-)	Clamp, Hose, Wormdrive, 0.31- 0.88d, .31w	2
	34	385644	(000000- 004690)	Fitting, Plstc, Tee, Bm08/Bm12/Bm12, Br	1

Fig. 27 - Pressure Washer Mount Group

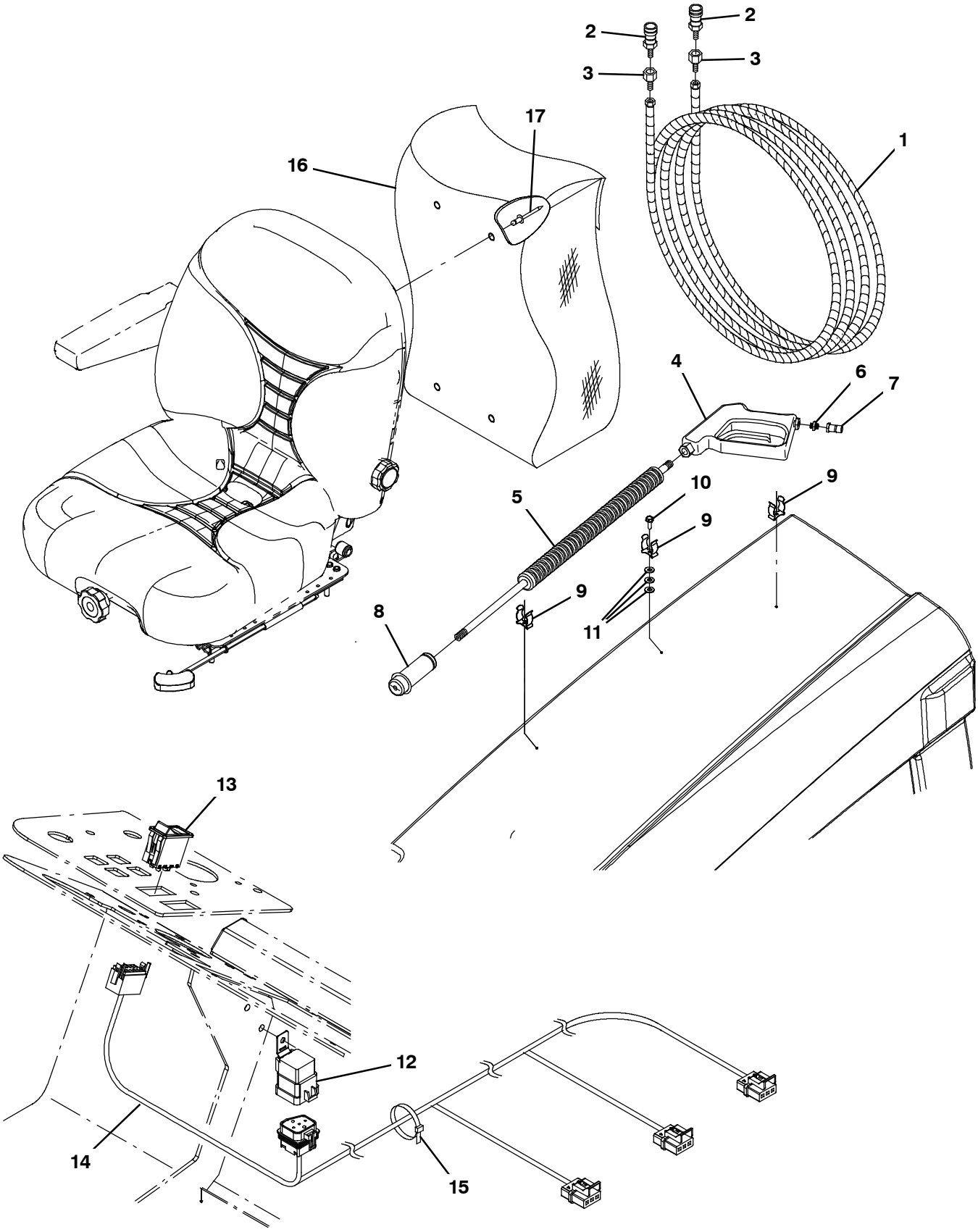

354672

Fig. 27 - Pressure Washer Mount Group

Ref.	Part No.	Serial Number	Description	Qty.
1	1039056	(000000-)	Hose, Rbr, 25ft	1
2	1042051	(000000-)	Fitting, Ss, Qdc, Fem	2
3	1042772	(000000-)	Fitting, Brs, Str, Pf06/Pm04	2
4	1039042	(000000-)	Handle, Gun, Trigger	1
5	1039044	(000000-)	Wand, Str, Ss, 28l	1
6	1044428	(000000-)	Fitting, Brs, Str, Pm04/Pm06 [Hp]	1
7	1042191	(000000-)	Fitting, Ss, Qdc, Mal	1
8	1041935	(000000-)	Nozzle, Spray [Pressure Washer]	1
9	67004	(000000-)	Clip, Grip, Finger, 1.00- 1.88d White,Vyl	3
10	20394	(000000-)	Screw, Hex, 10- 16 X 0.62, Fmg/Ab, Pl	3
11	01683	(000000-)	Washer, Flat, 10, Ss	12
12	56186	(000000-)	Relay, 12vdc, 040a, Spdt No	1
13	1040899	(000000-)	Switch, Rocker, Prgrsv	1
14	1040898	(000000-)	Harness, Press Wash [M30]	1
15	49266	(000000-)	Tie, Cable, Nyl, 07.3l .19w 1.8 Max D	5
16	65580	(000000-)	Bag, Power	1
17	72968	(000000-)	Rivet, Plstc, .250D X 0.90	2

Fig. 28 - Pressure Washer Solution Group

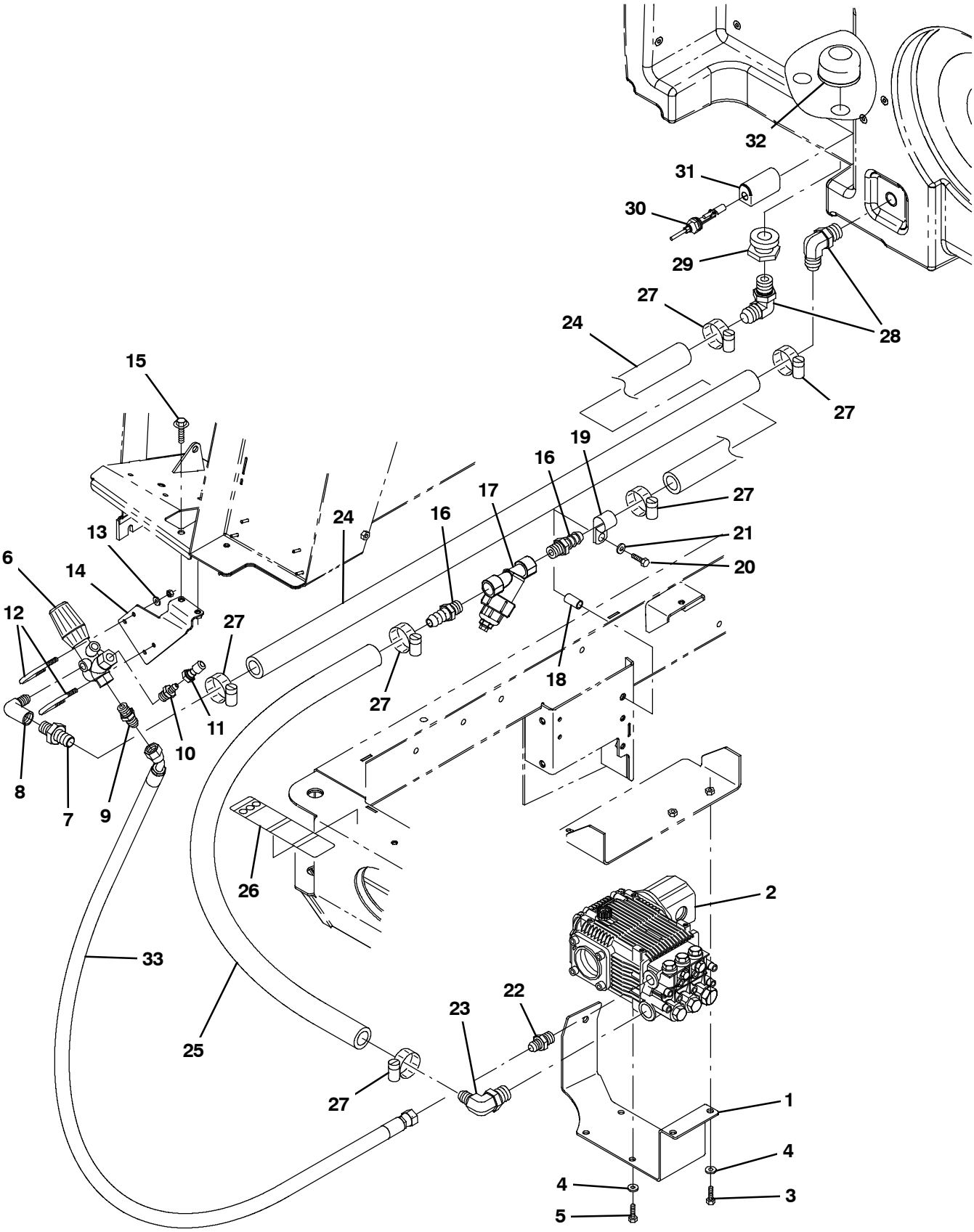

354673

Fig. 28 - Pressure Washer Solution Group

Ref.	Part No.	Serial Number	Description	Qty.
1	1037634	(000000-)	Bracket, Mtg, Motor	1
2	1038855	(000000-)	Pump, Hyd, Press Washer (See Breakdowns)	1
3	09010	(000000-)	Screw, Hex, M8 X 1.25 X 25, Ss	3
4	01685	(000000-)	Washer, Flat, 0.38b 0.88d .08, Ss	7
5	15675	(000000-)	Screw, Hex, M8 X 1.25 X 16, Ss	4
6	1039046	(000000-)	Valve, Needle	1
7	1042859	(000000-)	Fitting, Brs, Str, Bm12/Pm08	1
8	1042579	(000000-)	Fitting, Brs, E90, Pf08/Pm06	1
9	1044429	(000000-)	Fitting, Brs, Str, Pm06/Pm08 [Hp]	1
10	1044428	(000000-)	Fitting, Brs, Str, Pm04/Pm06 [Hp]	1
11	1042191	(000000-)	Fitting, Ss, Qdc, Mal	1
12	45142	(000000-)	Bolt, U, .25- 20 X 2.00, 1.10id	2
13	07515	(000000-)	Washer, Lock, Int, 0.25, Ss	4
14	1040709	(000000-)	Bracket, Mtg, Needle	1
15	1037346	(000000-)	Screw, Hex, M8 X 1.25 X 25, 9.8, Sems	2
16	377334	(000000-)	Fitting, Brs, Str, Bm12/Pm12	2
17	1039037	(000000-)	Filter, Y, Inline, .75	1
18	1039348	(000000-)	Sleeve, 0.49b 0.68d 1.2l [304ss]	1
19	53466	(000000-)	Clamp, Cable, Stl, 1.50d X 1.00w, 1hole	1
20	32731	(000000-)	Screw, Hex, M10 X 1.50 X 50, Ss	1
21	01686	(000000-)	Washer, Flat, 0.44b 1.00d .08, Ss	1
22	1044429	(000000-)	Fitting, Brs, Str, Pm06/Pm08 [Hp]	1
23	48697	(000000-)	Fitting, Brs, E90, Em12/Pm08	1
24	1045034	(000000-)	Hose, Afmkt, Pvc, Wir, 0.75id, 08ft, Clr	1
25	1045045	(000000-)	Hose, Afmkt, Pvc, Wir, 0.75id, 02ft, Clr	1
26	1041952	(000000-)	Label Set, Info/Hzrd, Press Wash	1
27	63810	(000000-)	Clamp, Hose, Wormdrive, 0.56- 1.06d, .56w	6
28	1041351	(000000-)	Fitting, Brs, E90, Bm12/Pm12	2
29	377349	(000000-)	Fitting, Plstc, Pf12/Pf12, Bh	1
30	385685	(000000-)	Sensor, Level, Liq, 14vdc 01a .62- 11	1
31	1019285	(000000-)	Bracket, Protector, Float Switch	1
32	1027290	(000000-)	Filter, Soltn, 20mesh, Pm12 3.1d 02.6l	1
33	1041391	(000000-)	Hose, Hyd, Tc08, Jf08E45/JF08Str, 18.0	1

Fig. 29 - Pressure Washer Hydraulic Hoses Group (000000-003999)

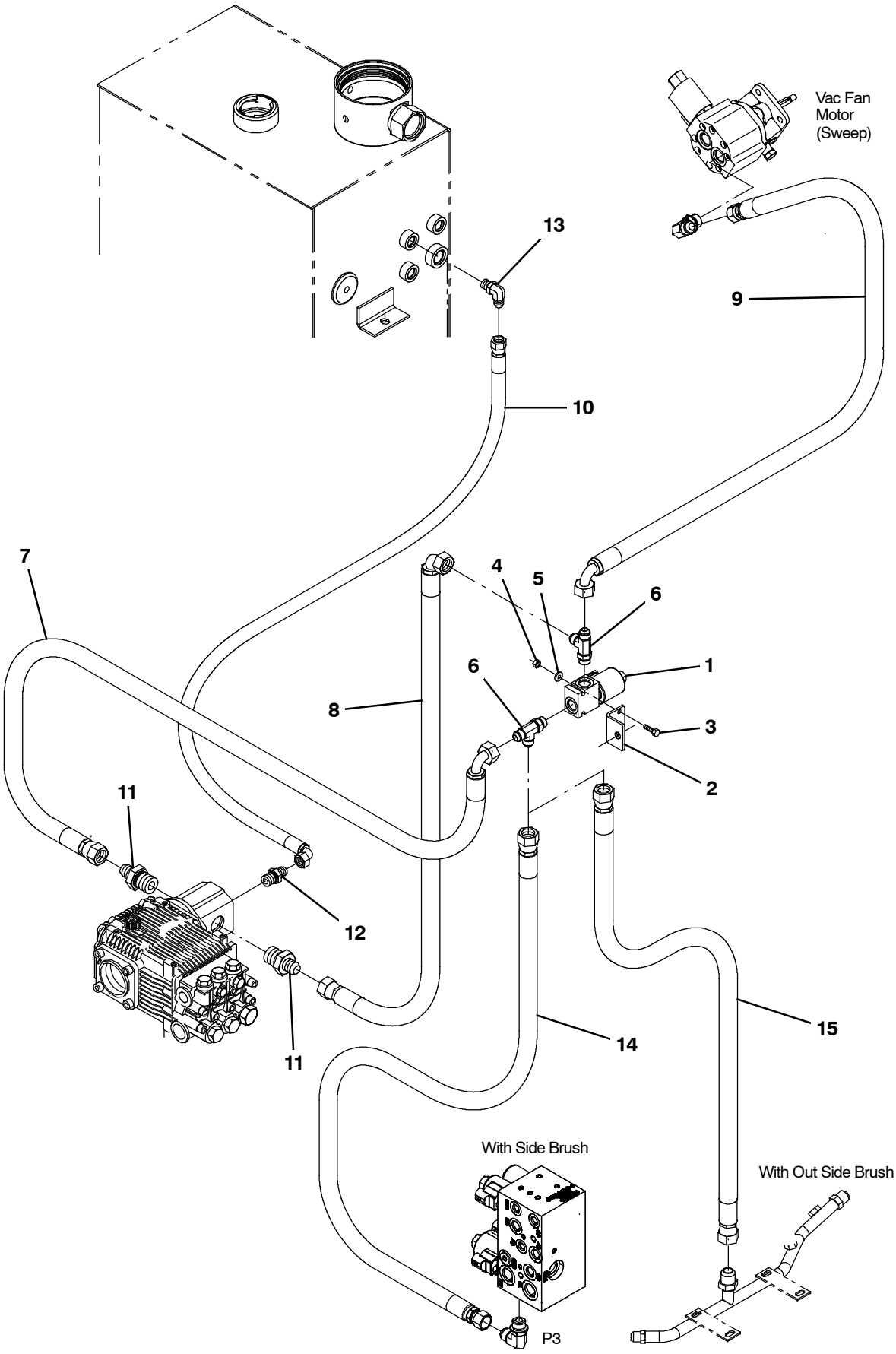

354674

Fig. 29 - Pressure Washer Hydraulic Hoses Group (000000-003999)

Ref.	Part No.	Serial Number	Description	Qty.
1	1038571	(000000-003999)	Valve, Hyd, Press Washer	1
2	1040512	(000000-003999)	Bracket, Mtg	1
3	06948	(000000-003999)	Screw, Hex, M6 X 1.00 X 60, 8.8	2
4	08708	(000000-003999)	Nut, Hex, Lock, M6 X 1.00, Nl	2
5	32483	(000000-003999)	Washer, Flat, 0.25, Sae	2
6	40755	(000000-003999)	Fitting, Hyd, Tee, Jm08/Jm08/Om08, Run	2
7	71741	(000000-003999)	Hose, Hyd, Tc08, Jf08e90/Jf08str, 046.0	1
8	1040216	(000000-003999)	Hose, Hyd, Tc08, Jf08e90/Jf08str, 029.0	1
9	381858	(000000-003999)	Hose, Hyd, Tc08, Jf08e90/Jf08str, 024.0	1
10	1040630	(000000-003999)	Hose, Hyd, Med04, Jf04e90/Jf04str, 022.0	1
11	42227	(000000-003999)	Fitting, Hyd, Str, Jm08/Om12	2
12	55685	(000000-003999)	Fitting, Hyd, Str, Jm04/Om06	1
13	47638	(000000-003999)	Fitting, Hyd, E90, Jm04/Om06	1
14	1036902	(000000-003999)	Hose, Hyd, Tc08, Jf08str/Jf08str, 039.0	1
15	361037	(000000-003999)	Hose, Hyd, Tc08, Jf08str/Jf08str, 027.0	1

Fig. 30 - Pressure Washer Hydraulic Hoses Group (004000-)

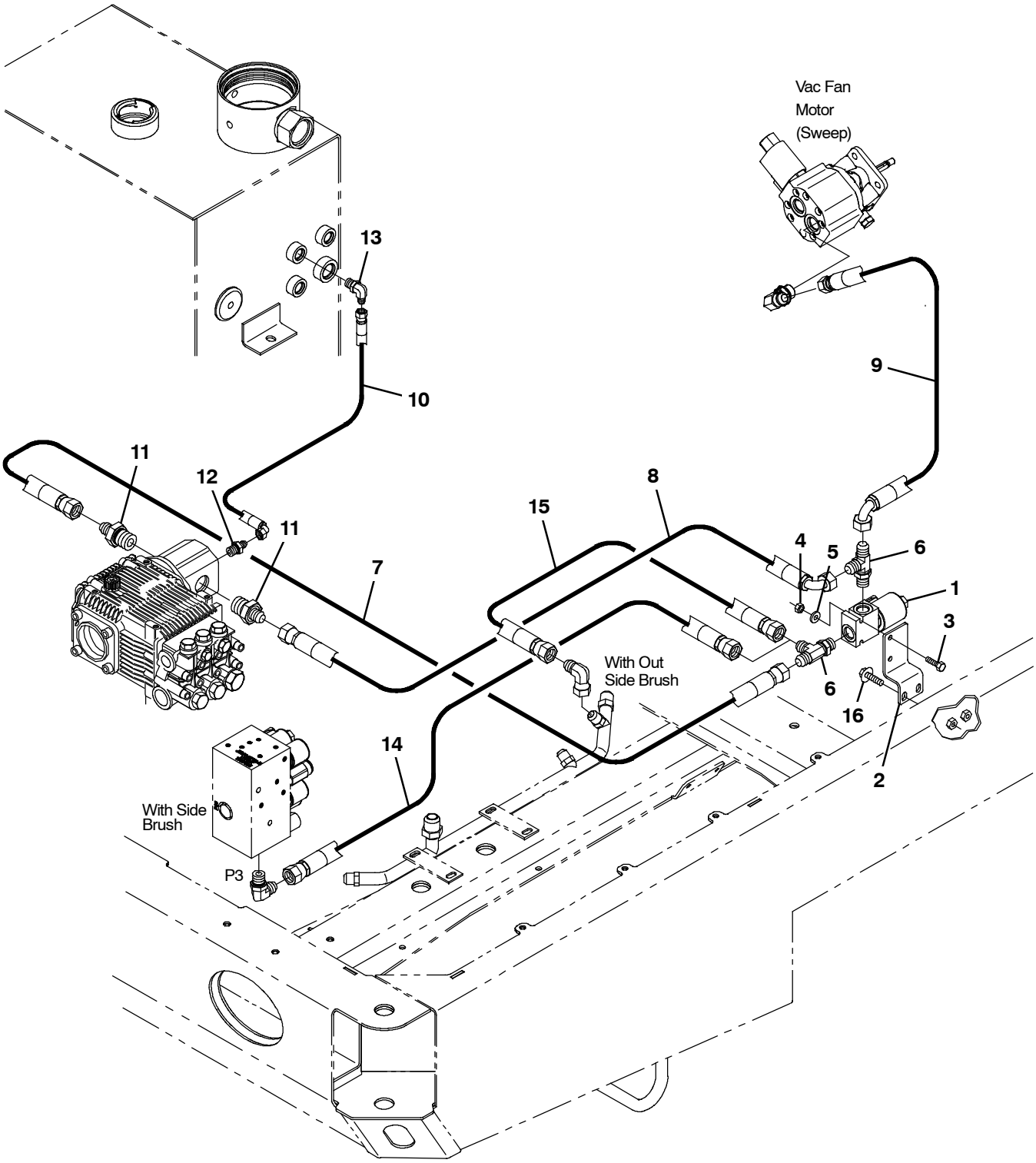

354674

Fig. 30 - Pressure Washer Hydraulic Hoses Group (004000-)

Ref.	Part No.	Serial Number	Description	Qty.
1	1038571	(004000-)	Valve, Hyd, Press Washer	1
2	1071852	(004000-)	Bracket, Mtg	1
3	06948	(004000-)	Screw, Hex, M6 X 1.00 X 60, 8.8	2
4	08708	(004000-)	Nut, Hex, Lock, M6 X 1.00, Nl	2
5	32483	(004000-)	Washer, Flat, 0.25, Sae	2
6	40755	(004000-)	Fitting, Hyd, Tee, Jm08/Jm08/Om08, Run	2
7	365007	(004000-)	Hose, Hyd, Tc08, Jf08str/Jf08str, 072.0	1
8	396209	(004000-)	Hose, Hyd, Tc08, Jf08e90/Jf08str, 054.0	1
9	1039753	(004000-)	Hose, Hyd, Tc08, Jf08e90/Jf08str, 042.0	1
10	1040630	(004000-)	Hose, Hyd, Med04, Jf04e90/Jf04str, 022.0	1
11	42227	(004000-)	Fitting, Hyd, Str, Jm08/Om12	2
12	55685	(004000-)	Fitting, Hyd, Str, Jm04/Om06	1
13	47638	(004000-)	Fitting, Hyd, E90, Jm04/Om06	1
14	1037072	(004000-)	Hose, Hyd, Tc08, Jf08str/Jf08str, 052.0	1
15	1036902	(004000-)	Hose, Hyd, Tc08, Jf08str/Jf08str, 039.0	1
16	1037354	(004000-)	Screw, Hex, M8 X 1.25 X 30, 9.8, Sems	2

Fig. 31 - Transport Kit

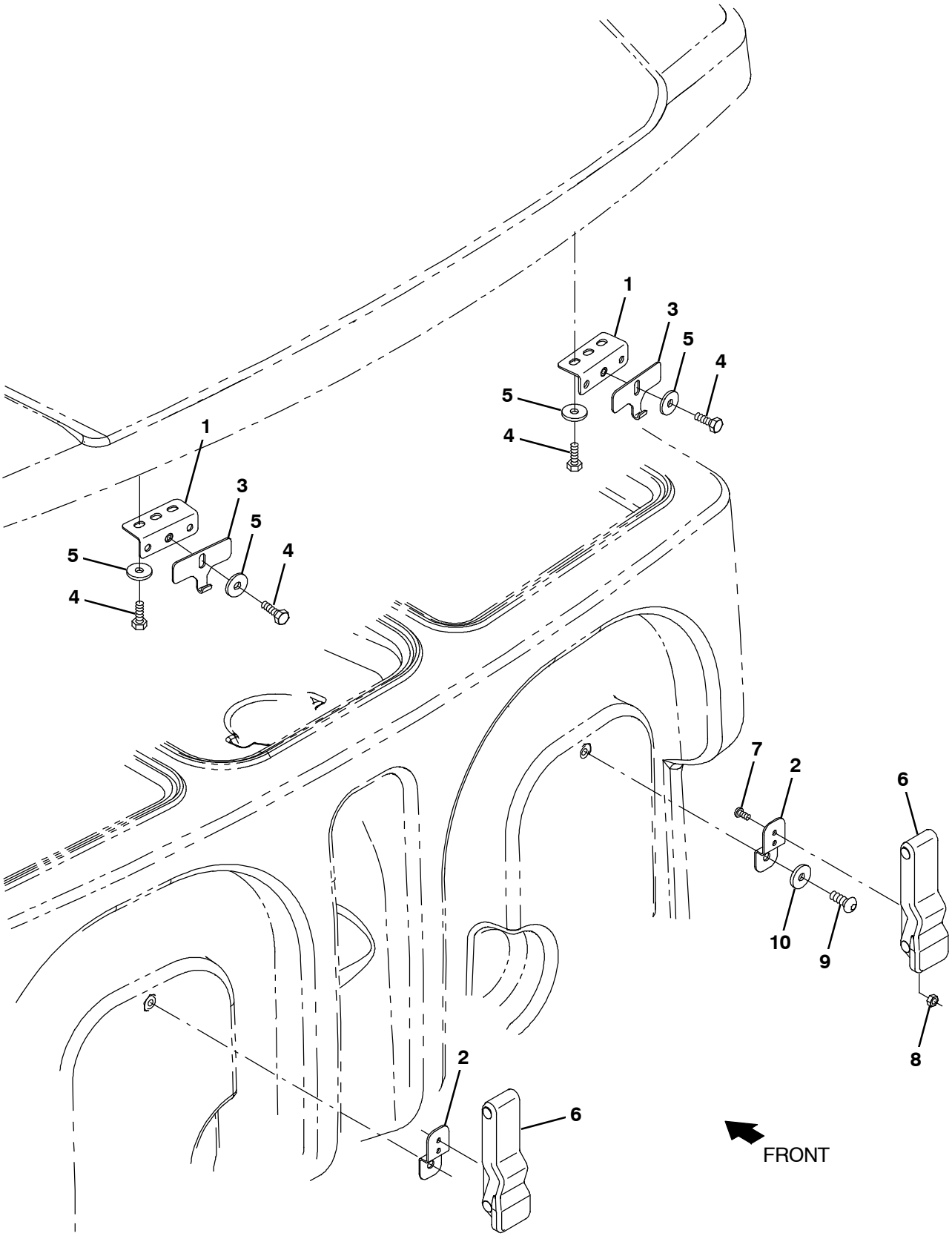

354481

Fig. 31 - Transport Kit

	Ref.	Part No.	Serial Number	Description	Qty.
▽		9014867	(000000-)	Transport Kit, Ci [M20/M30}	1
▲	1	1040800	(000000-)	Bracket, Latch, Cover	2
▲	2	1020526	(000000-)	Bracket, Retaining, Hose	2
▲	3	1032896	(000000-)	Plate, Hook, Latch, [M20]	2
▲	4	09744	(000000-)	Screw, Hex, M6 X 1.00 X 12, Ss	8
▲	5	01684	(000000-)	Washer, Flat, 0.27b 0.69d .05, Ss	8
▲	6	360824	(000000-)	Latch	2
▲	7	09200	(000000-)	Screw, Pan, Phl, M5 X 0.80 X 12, Ss	4
▲	8	09739	(000000-)	Nut, Hex, Lock, M5 X 0.80, Nl, Ss	4
▲	9	393135	(000000-)	Screw, Btn, M8 X 1.25 X 20, Blk	2
▲	10	32491	(000000-)	Washer, Flat, 0.31, Std	2

Fig. 32 - Squeegee Guard Kit

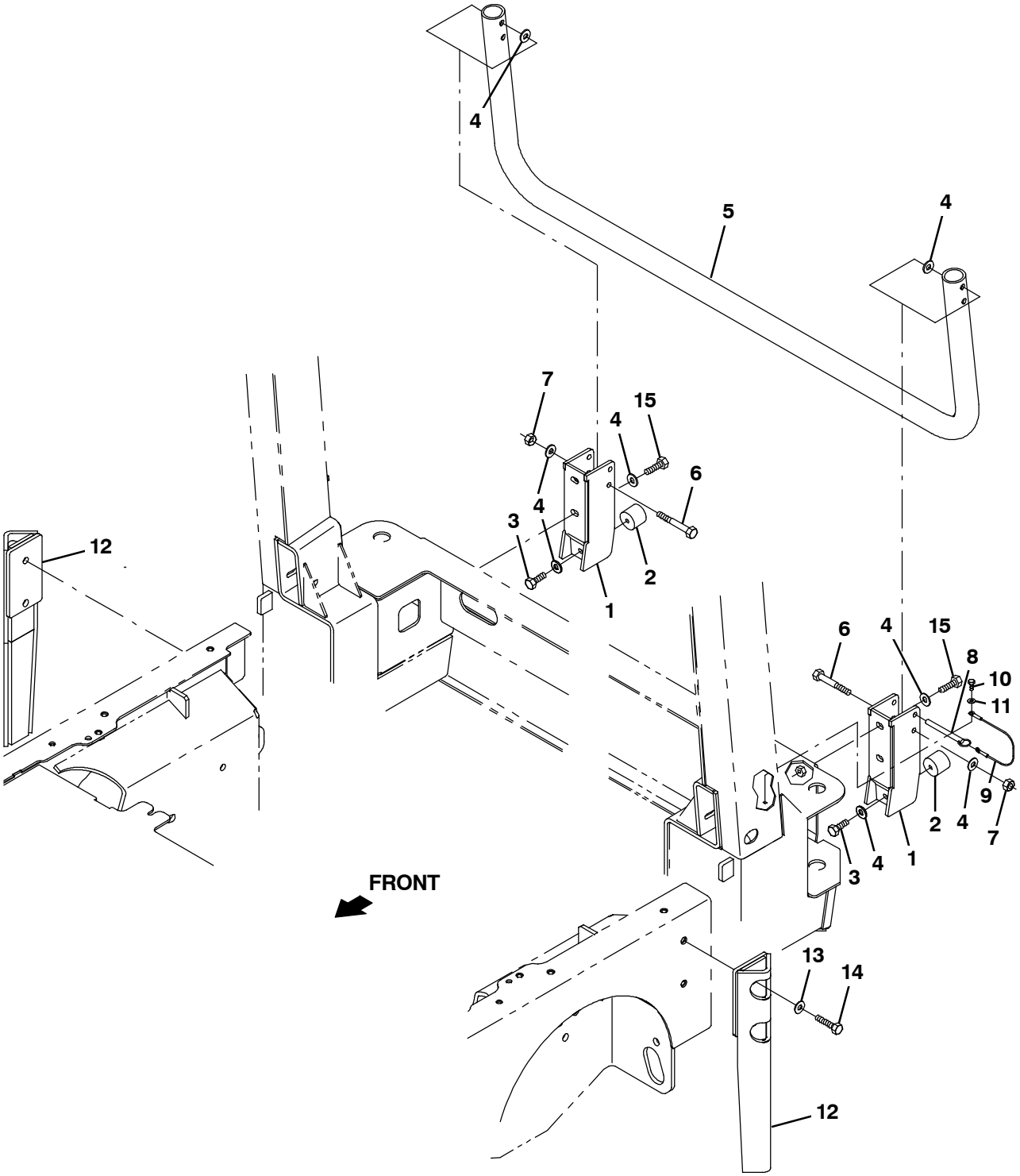

354650

Fig. 32 - Squeegee Guard Kit

	Ref.	Part No.	Serial Number	Description	Qty.
▽		9004029	(000000-)	Guard Kit, Sqge, Ci [M30]	1
▲	1	1027560	(000000-)	Bracket Wldt, Guard, Sqge	2
▲	2	1024977	(000000-)	Bumper, Ure, 1.50d 1.25l	2
▲	3	21196	(000000-)	Screw, Hex, .38- 16 X 0.88, G5	2
▲	4	32492	(000000-)	Washer, Flat, 0.38, Std	10
▲	5	1056191	(000000-)	Guard Wldt, Sqge, Pntd [M30]	1
▲	6	06965	(000000-)	Screw, Hex, M10 X 1.50 X 80, 8.8	2
▲	7	41430	(000000-)	Nut, Hex, Lock, M10 X 1.5, Nl	2
▲	8	369359	(000000-)	Pin, Hitch, .375d X 3.12l, Pl	1
▲	9	57702	(000000-)	Cable, Glv .06d 012.0l .26eye /.26eye	1
▲	10	09738	(000000-)	Screw, Hex, M5 X 0.80 X 12, Ss	1
▲	11	01683	(000000-)	Washer, Flat, 10, Ss	1
▲	12	1045444	(000000-)	Guard Wldt, Sqge	2
▲	13	32486	(000000-)	Washer, Flat, 0.50, Sae	2
▲	14	368176	(000000-)	Screw, Hex, M10 X 1.50 X 35, 10.9	4
▲	15	39284	(000000-)	Screw, Hex, M10 X 1.50 X 35, 8.8	4

Fig. 33 - Fire Extinguisher Kit

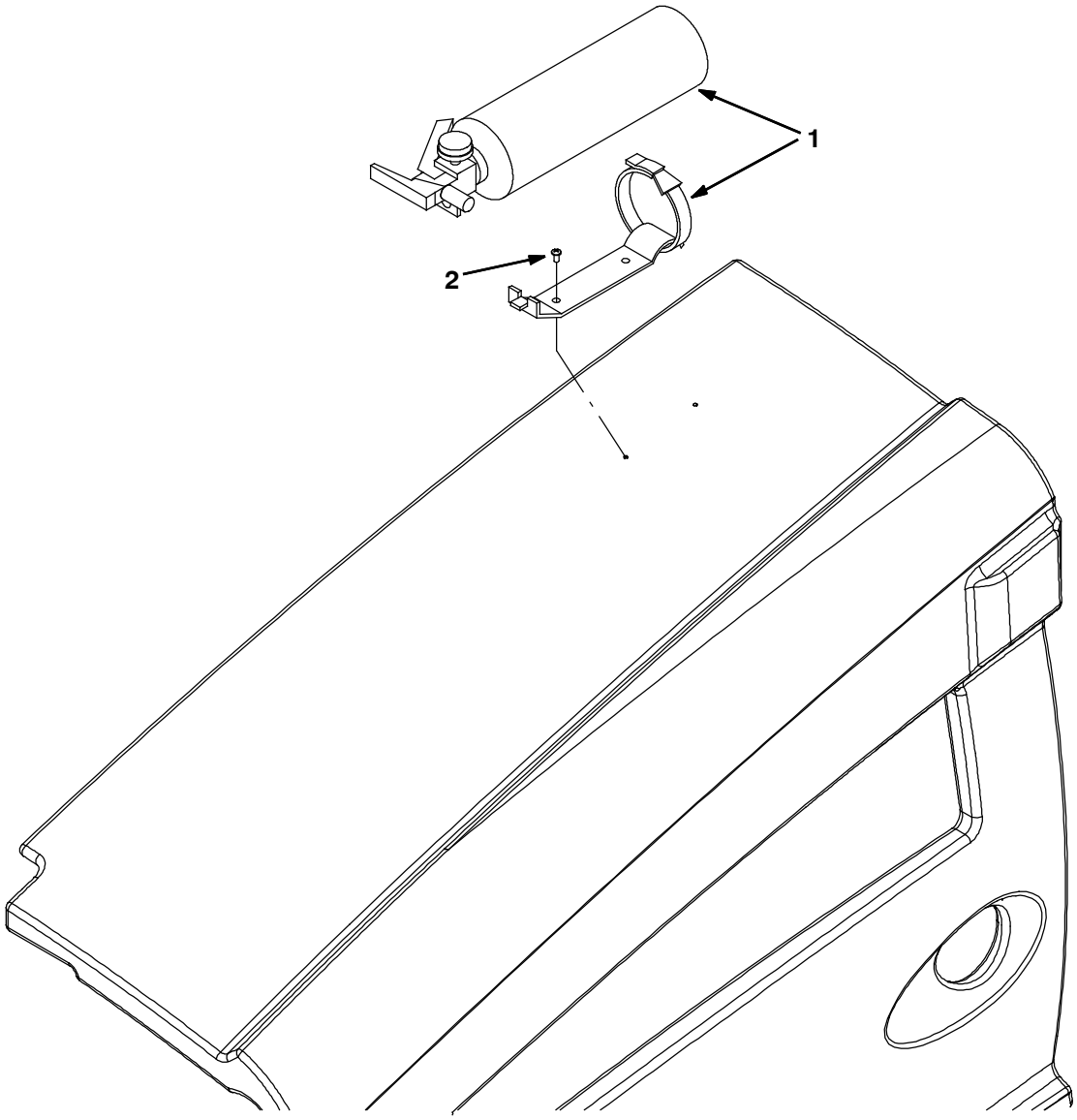

354484

Ref.	Part No.	Serial Number	Description	Qty.
	9001316	(000000-)	Extinguisher Kit, Fire, Ci [M20/T20/M30]	1
1	25312	(000000-)	Extinguisher, Fire, 2.5 Lb Dry	1
2	382320	(000000-)	Screw, Pan, Phl, 12- 16 X 0.50, F/ Plstc	2

Fig. 34 - Documentation Group

Ref.	Part No.	Serial Number	Description	Qty.
	9003948	(000000-)	Manual, Oprtr [M30 Diesel En]	1
	9003952	(000000-)	Manual, Parts [M30 Diesel En]	1
	9003950	(000000-)	Manual, Oprtr [M30 Diesel Es]	1
	9003951	(000000-)	Manual, Oprtr [M30 Diesel Fr]	1
	9003947	(000000-)	Manual, Service [M30 En]	1
	1042640	(000000-)	Video, Oprtr, Dvd [W/ Checklist M30]	1
	9004422	(000000-)	Manual, Operator [Ku]	1
	9004734	(000000-)	Manual, Oprtr [M30 Dsl, Jp]	1
	9004735	(000000-)	Manual, Oprtr [M30 Dsl, Cn]	1
	9004736	(000000-)	Manual, Oprtr [M30 Dsl, Pt, Br]	1
	9004703	(000000-)	Manual, Oprtr [M30 Dsl, Cz, Ce]	1
	9004704	(000000-)	Manual, Oprtr [M30 Dsl, De, Ce]	1
	9004705	(000000-)	Manual, Oprtr [M30 Dsl, Dk, Ce]	1
	9004706	(000000-)	Manual, Oprtr [M30 Dsl, En, Ce]	1
	9004707	(000000-)	Manual, Oprtr [M30 Dsl, Es, Ce]	1
	9004708	(000000-)	Manual, Oprtr [M30 Dsl, Fi, Ce]	1
	9004709	(000000-)	Manual, Oprtr [M30 Dsl, Fr, Ce]	1
	9004710	(000000-)	Manual, Oprtr [M30 Dsl, Gr, Ce]	1
	9004711	(000000-)	Manual, Oprtr [M30 Dsl, Hu, Ce]	1
	9004712	(000000-)	Manual, Oprtr [M30 Dsl, It, Ce]	1
	9004713	(000000-)	Manual, Oprtr [M30 Dsl, Nl, Ce]	1
	9004714	(000000-)	Manual, Oprtr [M30 Dsl, No, Ce]	1
	9004715	(000000-)	Manual, Oprtr [M30 Dsl, Pl, Ce]	1
	9004716	(000000-)	Manual, Oprtr [M30 Dsl, Pt, Ce]	1
	9004717	(000000-)	Manual, Oprtr [M30 Dsl, Ru, Ce]	1
	9004718	(000000-)	Manual, Oprtr [M30 Dsl, Se, Ce]	1
	9004719	(000000-)	Manual, Oprtr [M30 Dsl, Tr, Ce]	1
	9004720	(000000-)	Manual, Oprtr [M30 Dsl, Ee, Ce]	1
	9004721	(000000-)	Manual, Oprtr [M30 Dsl, Lv, Ce]	1
	9004722	(000000-)	Manual, Oprtr [M30 Dsl, Lt, Ce]	1
	9004723	(000000-)	Manual, Oprtr [M30 Dsl, Sk, Ce]	1
	9004724	(000000-)	Manual, Oprtr [M30 Dsl, Si, Ce]	1
	9004725	(000000-)	Manual, Oprtr [M30 Dsl, Bg, Ce]	1
	9004726	(000000-)	Manual, Oprtr [M30 Dsl, Ro, Ce]	1
	9006257	(000000-)	Media, Cd- Rom, Training [ec- H2O Tennant]	1
	9011429	(000000-)	Manual, Oprtr [M30 Dsl, Hr]	1

To view, print, order, download the latest Parts manual, other language Operator manuals, and Use and Care Guides (wall charts), visit:

www.tennantco.com/manual

SECTION 4

Contents **Page**

Fig. 1 - Extended Scrub Pump Breakdown, 1021210 4-2
Fig. 2 - Hydraulic Motor Breakdown, 379609 . . . 4-4
Fig. 3 - Hydraulic Pump Breakdown, 1024251 . 4-6
Fig. 4 - Hydraulic Gear Pump Breakdown, 1034448 4-8
Fig. 5 - Hydraulic Motor Breakdown, 71729 . . . 4-10
Fig. 6 - Hydraulic Motor Breakdown, 1029379 4-11
Fig. 7 - Hydraulic Steering Valve Breakdown, 1024260 4-12
Fig. 8 - Hydraulic Valve Breakdown, 1038566 . 4-14
Fig. 9 - Hydraulic Valve Breakdown, 1072995 . 4-16
Fig. 10 - Hydraulic Valve Breakdown, 1037805 . 4-18
Fig. 11 - Hydraulic Valve Breakdown, 1072997 . 4-20
Fig. 12 - Hydraulic Motor Breakdown, 53485 . . . 4-22
Fig. 13 - Metering Solution Pump Breakdown, 73260 4-23
Fig. 14 - Water Pump Breakdown, 1026743 . . . 4-24
Fig. 15 - Water Pump Motor Breakdown, 1038855 4-25
Fig. 16 - ec- H20 Module Assembly Breakdown, 9007882 4-26
Fig. 17 - Seat Breakdown, 1072456 4-28
Fig. 18 - FaST Injector Assembly Breakdown, 9008868 4-30

Fig. 1 - Extended Scrub Pump Breakdown, 1021210

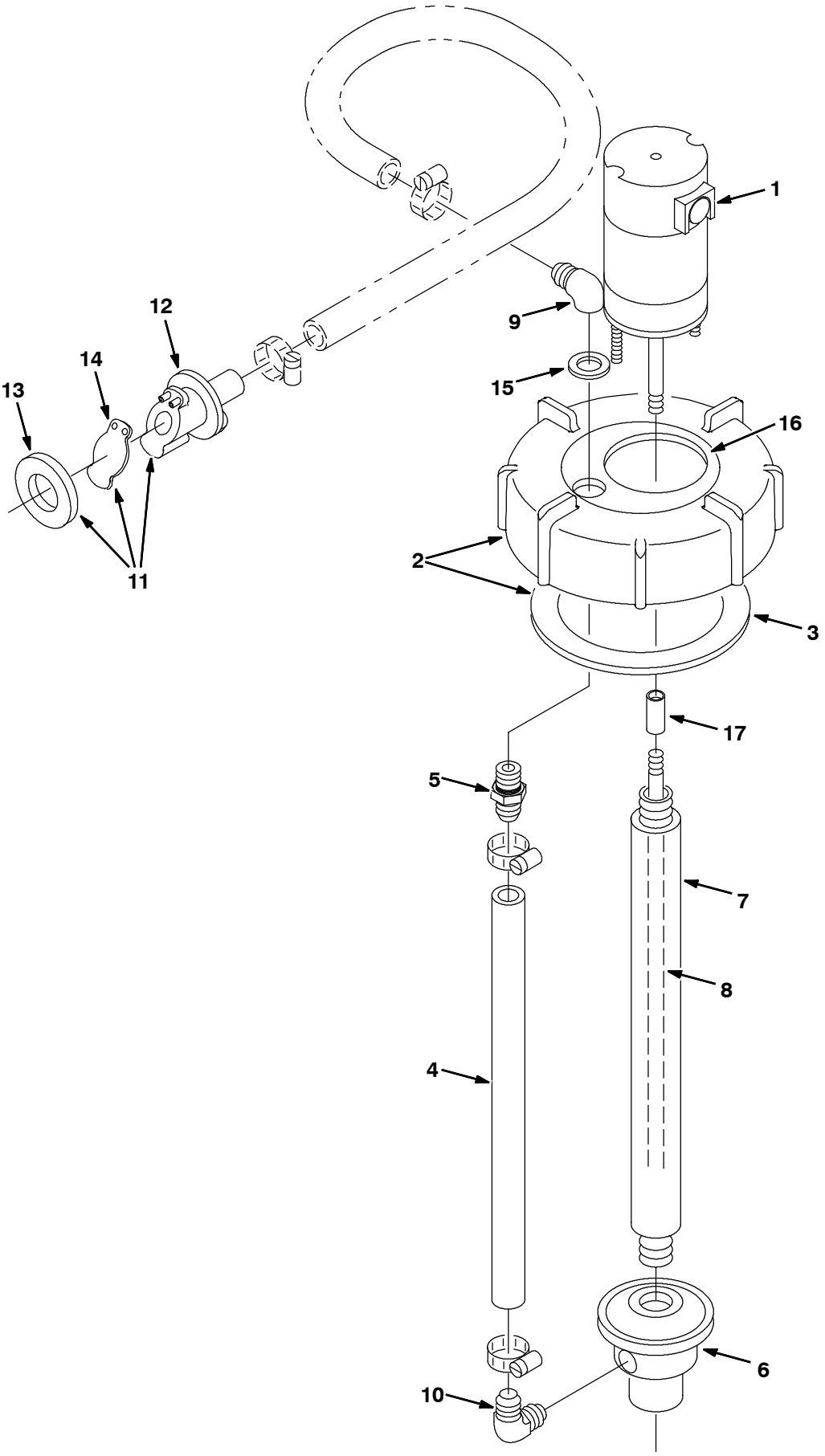

354377 - ALL

Fig. 1 - Extended Scrub Pump Breakdown, 1021210

	Ref.	Part No.	Serial Number	Description	Qty.
▽		1021210	(000000-)	Pump Assy, Column, Es	1
▲▽	1	9002708	(000000-)	Motor, Ele, 12vdc, Pump, Water	1
▲▲		78829	(000000-)	Kit, Brush, Motor, Ele	1
▲▽	2	24358	(000000-)	Cap Assy, Tank, Drain	1
▲▲	3	1031699	(000000-)	Gasket, 4.05id 5.29od .19 [Buna]	1
▲	4	78833	(000000-)	Tube, Vinyl, Pump, Water	1
▲	5	78398	(000000-)	Fitting, Plstc, Str, Bm12/Pm08, Nyl	1
▲	6	78843	(000000-)	Housing Kit, Pump, Water	1
▲	7	78836	(000000-)	Column, Pump, Water	1
▲	8	9002709	(000000-)	Shaft, Pump, Water	1
▲	9	78838	(000000-)	Fitting, E, Gr	1
▲	10	78839	(000000-)	Fitting, Plstc, E90, Pf Bm [Es Pump]	1
▲▽	11	78842	(000000-)	Kit, Valve, Check, Pump, Water	1
▲▲	12	78840	(000000-)	Valve, Check, Pump, Water	1
▲▲	13	73342	(000000-)	Gasket, .25 1.88d 1.0id [Poron]	1
▲▲	14	78841	(000000-)	Flapper, Valve, Pump, Water	1
▲	15	78830	(000000-)	Washer, Rbr	1
▲	16	22790	(000000-)	Insert, Cap, Mount, Es Pump	1
▲	17	23285	(000000-)	Sleeve, Pump, Water	1

Fig. 2 - Hydraulic Motor Breakdown, 379609

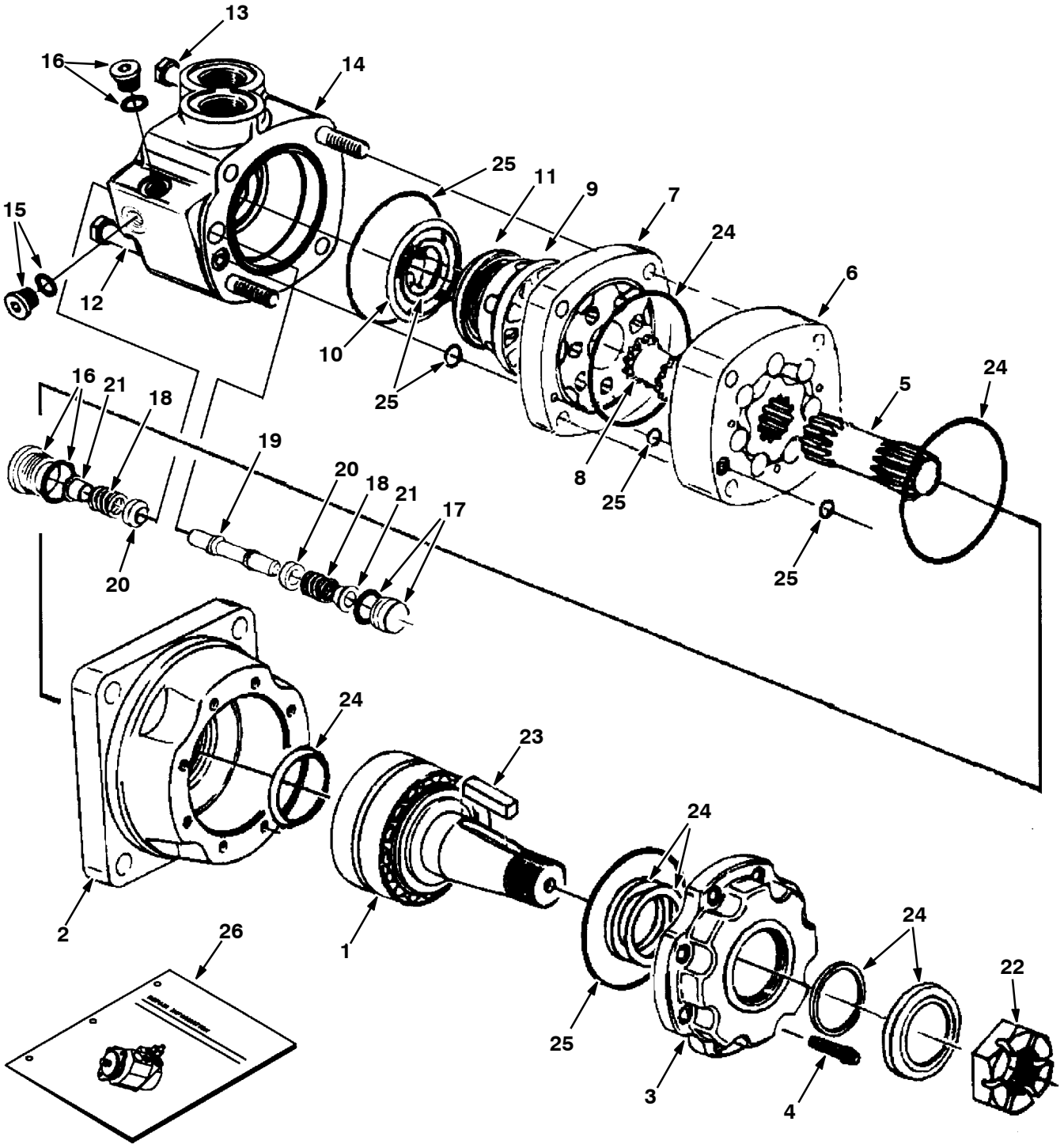

350628- 09670

Fig. 2 - Hydraulic Motor Breakdown, 379609

	Ref.	Part No.	Serial Number	Description	Qty.
▽		379609	(000000-)	Motor, Hyd, Gear, [Int], 19.0 X 3000	1
▲	1	74165	(000000-)	Shaft, Motor, Hyd	1
▲	2	74166	(000000-)	Housing, Brg, Motor, Hyd	1
▲	3	74167	(000000-)	Retainer, Motor, Hyd	1
▲	4	74168	(000000-)	Screw, Cap, Motor, Hyd	8
▲	5	37616	(000000-)	Drive, Motor, Hyd	1
▲	6	37756	(000000-)	Geroler, Motor, Hyd	1
▲	7	74122	(000000-)	Plate, Valve, Motor, Hyd	1
▲	8	52405	(000000-)	Valve, Motor, Hyd	1
▲	9	74123	(000000-)	Valve, Motor, Hyd	1
▲	10	34178	(000000-)	Spring, Motor, Hyd	2
▲	11	38968	(000000-)	Ring, Motor, Hyd	1
▲	12	74125	(000000-)	Bolt, Motor, Hyd	3
▲	13	38255	(000000-)	Bolt, Motor, Hyd	1
▲	14	373297	(000000-)	Housing, Valve	1
▲	15	373298	(000000-)	Plug	1
▲	16	373260	(000000-)	Plug, Pump, Hyd, Gear	2
▲	17	373299	(000000-)	Plug	1
▲	18	373291	(000000-)	Spring	2
▲	19	373217	(000000-)	Piston, Pump, Hyd, Gear	1
▲	20	373226	(000000-)	Poppet, Pump, Hyd, Gear	2
▲	21	373236	(000000-)	Sleeve, Dashpo, Pump, Hyd, Gear	2
▲	22	45622	(000000-)	Nut, Motor, Hyd	1
▲	23	45623	(000000-)	Key, Motor, Hyd	1
▲	24	79828	(000000-)	Kit, Seal, Motor, Hyd	1
▲	25	33580	(000000-)	Kit, Seal, Motor, Hyd	1
	26	79729	(000000-)	Instr, Repair, Motor, Hyd, Gear	1

Fig. 3 - Hydraulic Pump Breakdown, 1024251

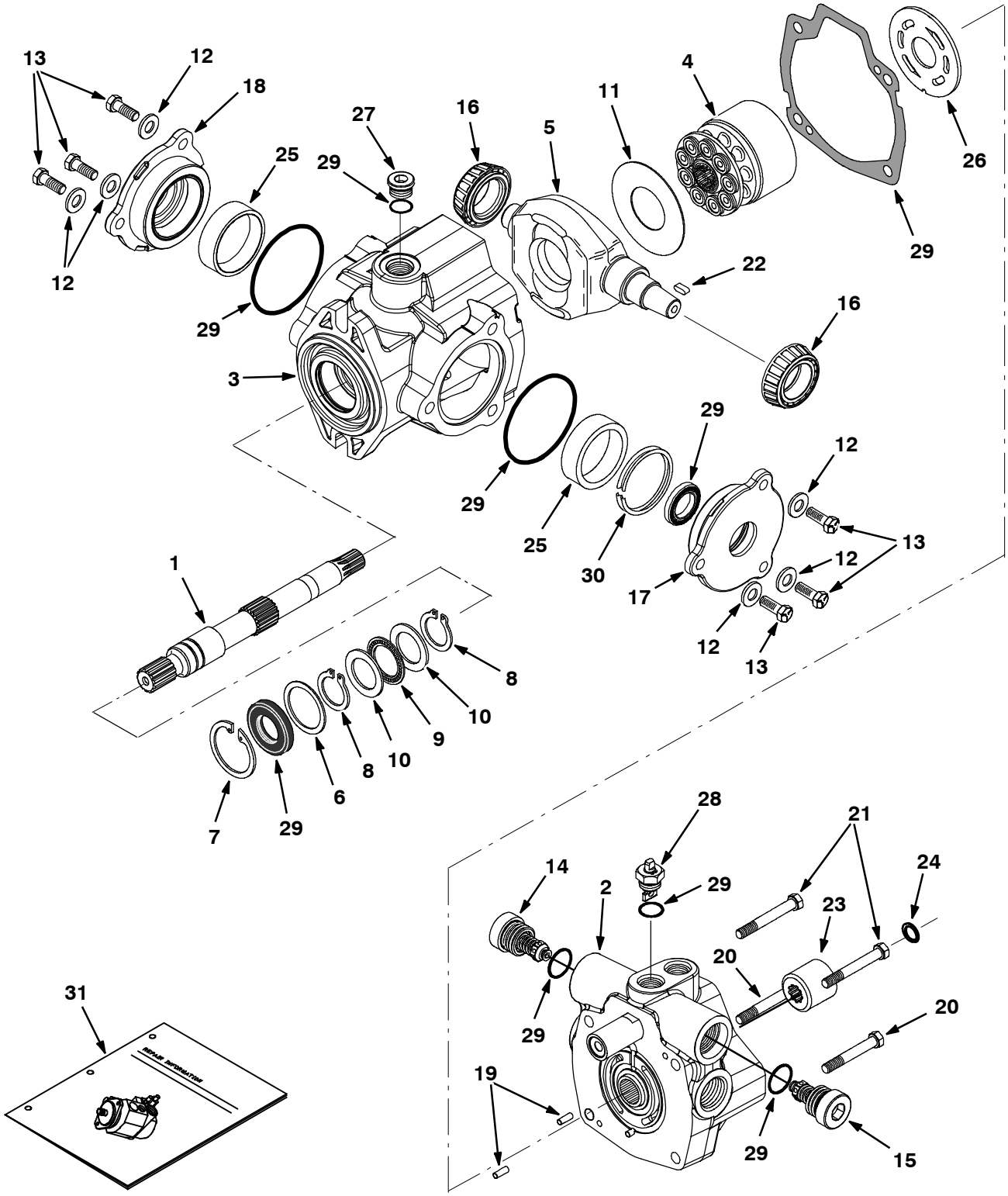

ALL

Fig. 3 - Hydraulic Pump Breakdown, 1024251

	Ref.	Part No.	Serial Number	Description	Qty.
▽		1024251	(000000-)	Pump, Hyd, Piston, Var, 1.24 4000, Cw	1
▲	1	373681	(000000-)	Shaft, Pump	1
▲	2	373427	(000000-)	Cover, End	1
▲	3	373389	(000000-)	Housing	1
▲	4	02706	(000000-)	Pump Kit, Hyd, Rotating [Cessna]	1
▲	5	373493	(000000-)	Plate, Cam	1
▲	6	70096	(000000-)	Washer, Flat, Pump, Hyd	1
▲	7	55926	(000000-)	Ring, Retaining, Pump, Hyd	1
▲	8	373434	(000000-)	Ring, Retaining	2
▲	9	74225	(000000-)	Bearing, Thrust, Pump, Hyd	1
▲	10	74226	(000000-)	Race, Brg, Pump, Hyd	2
▲	11	373327	(000000-)	Insert, Plt, Cam, Pump, Hyd	1
▲	12	373391	(000000-)	Washer, Pump, Hyd [En]	6
▲	13	373346	(000000-)	Screw, Cap	6
▲	14	373494	(000000-)	Valve, Relief, 4000 Psi	1
▲	15	373678	(000000-)	Valve, Relief, 3000 Psi	1
▲	16	373317	(000000-)	Bearing, Cone, Pump, Hyd	2
▲	17	373393	(000000-)	Plate, Cover	1
▲	18	373394	(000000-)	Plate, Cover	1
▲	19	70100	(000000-)	Pin, Dowel, Pump, Hyd	2
▲	20	373347	(000000-)	Screw, Cap	2
▲	21	373348	(000000-)	Screw, Cap	2
▲	22	74237	(000000-)	Key, Shaft, Pump, Hyd	1
▲	23	373679	(000000-)	Coupler, Pump	1
▲	24	373680	(000000-)	Ring, Lock	1
▲	25	373395	(000000-)	Bearing, Cup	2
▲	26	74180	(000000-)	Plate, Valve, Pump, Hyd	1
▲	27	13907	(000000-)	Fitting, Hyd, Plug, Om08	1
▲	28	373413	(000000-)	Actuator, Valve, By- Pass [En]	1
▲	29	373398	(000000-)	Seal Kit, Pump, Hyd	1
▲	30	373402	(000000-)	Shim Kit	1
	31	373429	(000000-)	Instr, Repair, Pump	1

Fig. 4 - Hydraulic Gear Pump Breakdown, 1034448

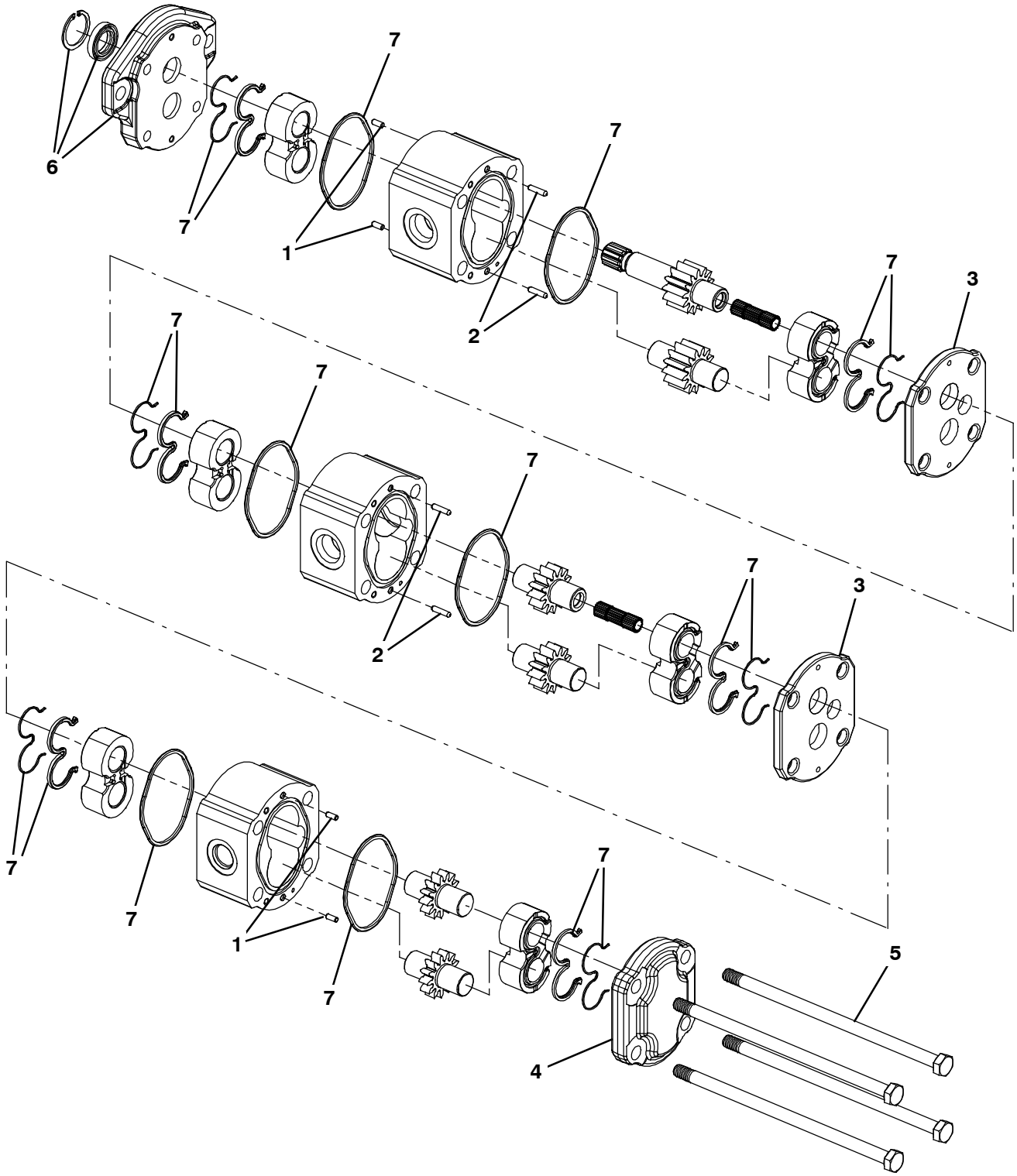

354712

Fig. 4 - Hydraulic Gear Pump Breakdown, 1034448

	Ref.	Part No.	Serial Number	Description	Qty.
▽		1034448	(000000-)	Pump, Hyd, Gear, Ext, 3, 00.85 2500, Cw	1
▲	1	21936	(000000-)	Pin, Dowel [Bn]	4
▲	2	21937	(000000-)	Pin, Dowel [Bn]	4
▲	3	21938	(000000-)	Plate, Distance, Pump, Hyd	2
▲	4	21939	(000000-)	Cover, End, Hyd Pump	1
▲	5	9004473	(000000-)	Bolt, M10x1.5	4
▲	6	21942	(000000-)	Flange Kit	1
▲	7	21946	(000000-)	Seal Kit, Pump, Hyd	1

Fig. 5 - Hydraulic Motor Breakdown, 71729

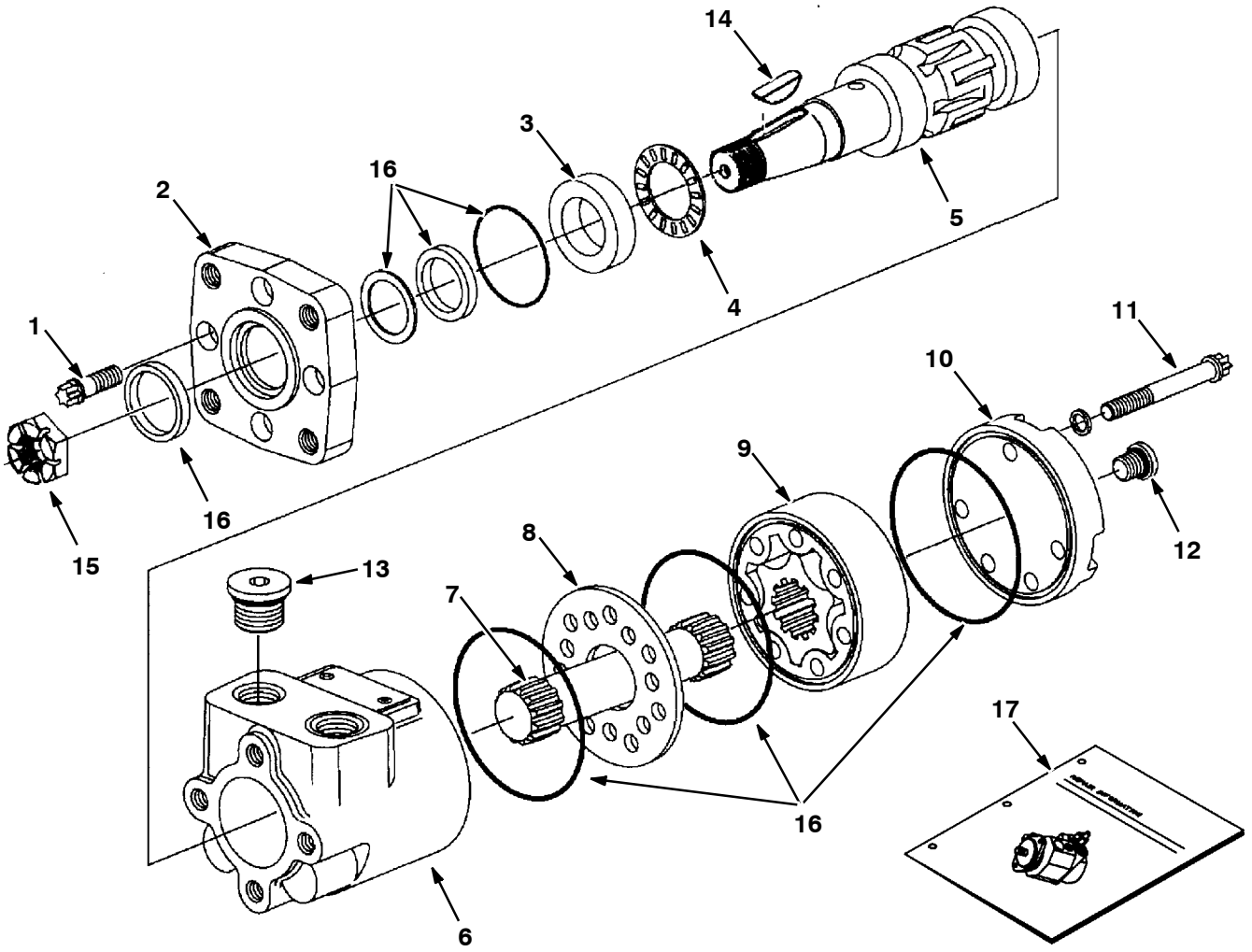

09606- 09670 - ALL

	Ref.	Part No.	Serial Number	Description	Qty.
▽		71729	(000000-)	Motor, Hyd Gear In 4.5 B 1500	1
▲	1	37555	(000000-)	Screw	4
▲	2	31354	(000000-)	Flange Mounting	1
▲	3	16695	(000000-)	Race Thrust	1
▲	4	45628	(000000-)	Thrust Bearing	1
▲	5	31375	(000000-)	Shaft, Output	1
▲	6	74100	(000000-)	Housingl	1
▲	7	31379	(000000-)	Drive	1
▲	8	74094	(000000-)	Spacer Plate	1
▲	9	31383	(000000-)	Gerotor Set	1
▲	10	74095	(000000-)	End Cap	1
▲	11	65241	(000000-)	Cap Screw	5
▲	12	74098	(000000-)	Plug #4	1
▲	13	74099	(000000-)	Plug #10	2
▲	14	00500- 15	(000000-)	Key- Wdruff 0.25 1.00	1
▲	15	39527	(000000-)	Nut- Hxslot .75- 16 Pltd	1
▲	16	61490	(000000-)	Seal Replmt Kit	1
▲	17	74250	(000000-)	Instr. Repair Info, Motor	1

Fig. 6 - Hydraulic Motor Breakdown, 1029379

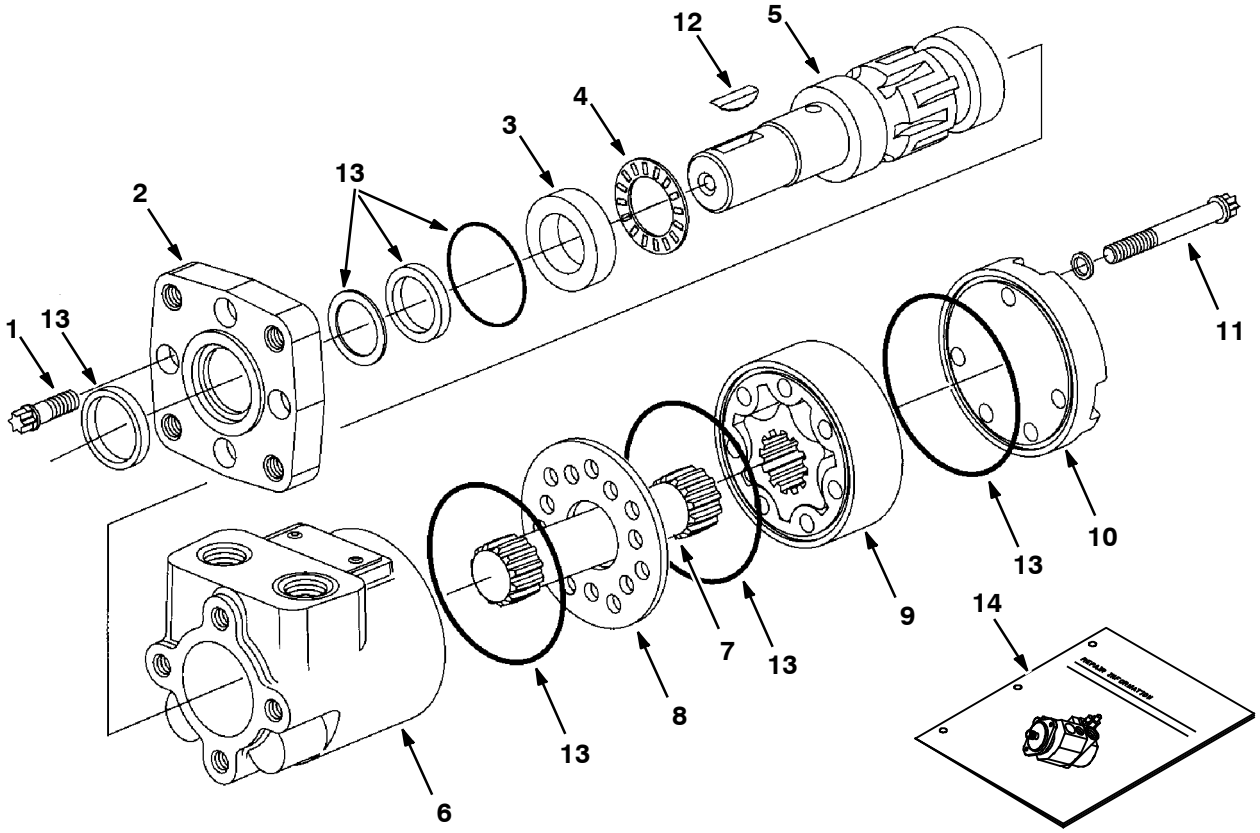

10859- 09670 - ALL

	Ref.	Part No.	Serial Number	Description	Qty.
▽		1029379	(000000-)	Motor, Hyd, Gear, Int 08.9 Bi- Dir 2500	1
▲	1	37555	(000000-)	Screw, Motor, Hyd [En]	4
▲	2	31354	(000000-)	Flange, Motor, Hyd [En]	1
▲	3	16695	(000000-)	Ace, Thrust, Motor, Hyd [En]	1
▲	4	45628	(000000-)	Bearing, Thrust	1
▲	5	28854	(000000-)	Shaft, Output, Motor, Hyd [En]	1
▲	6	74100	(000000-)	Housing, Motor, Hyd [En]	1
▲	7	21955	(000000-)	Drive [Cl]	1
▲	8	74094	(000000-)	Plate, Spacer, Motor, Hyd [En]	1
▲	9	21956	(000000-)	Gerotor Set [Cl]	1
▲	10	65230	(000000-)	End Cap, Motor, Hyd [En]	1
▲	11	21958	(000000-)	Cap Screw Cl	5
▲	12	00500- 15	(000000-)	Key, Woodruff, 0.25 1.00 [Asa#0808]	1
▲	13	61490	(000000-)	Seal Kit, Motor [Cl]	1
▲	14	74250	(000000-)	Instr, Motor, Hyd, Repair [En]	1

Fig. 7 - Hydraulic Steering Valve Breakdown, 1024260

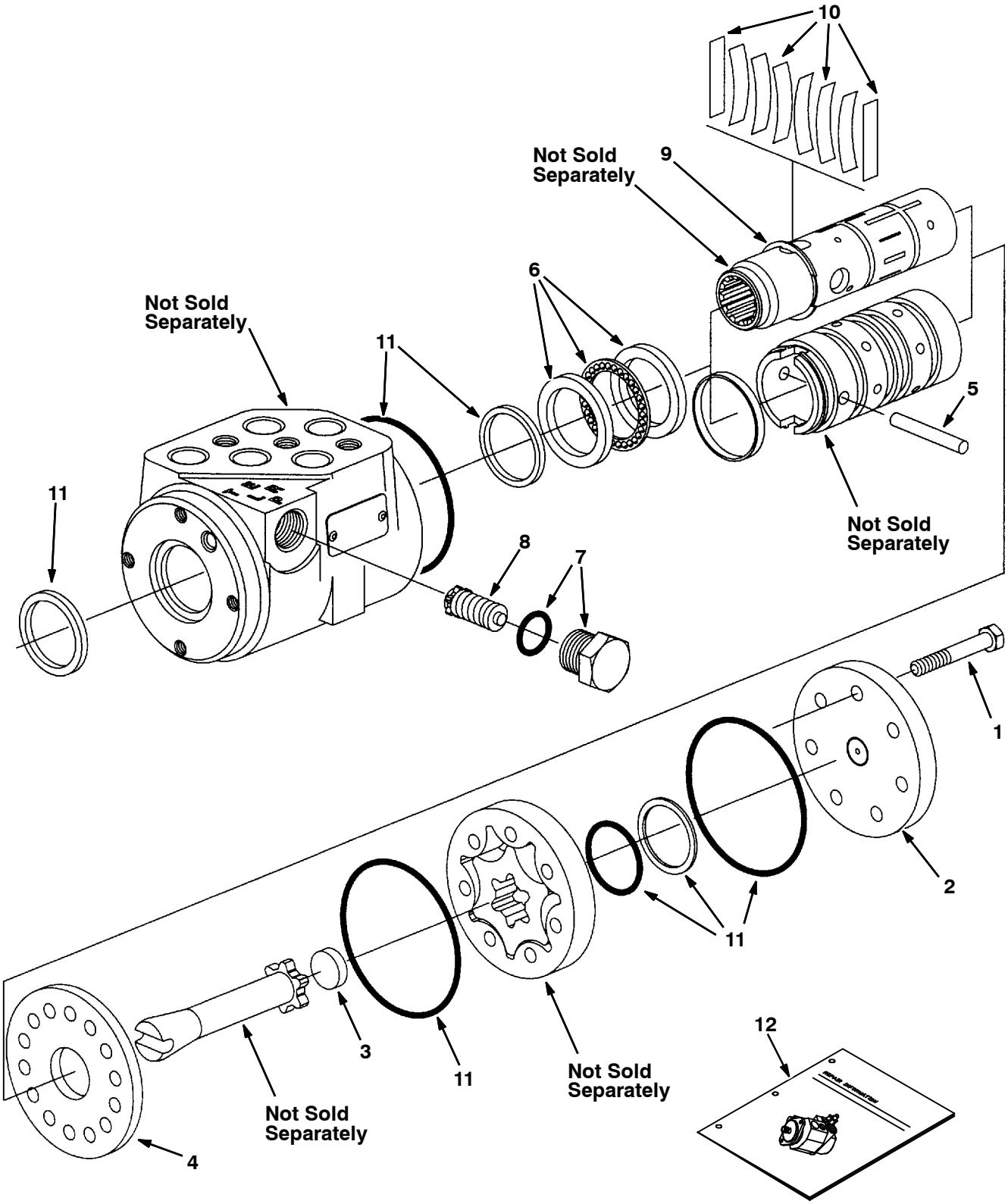

Fig. 7 - Hydraulic Steering Valve Breakdown, 1024260

	Ref.	Part No.	Serial Number	Description	Qty.
▽		1024260	(000000-)	Steer- Control, Hyd05, 06.1 2030	1
▲	1	74183	(000000-)	Screw, Valve, Steering	7
▲	2	74185	(000000-)	Cap, End, Valve, Steering	1
▲	3	74193	(000000-)	Spacer, Valve, Steering	1
▲	4	74222	(000000-)	Plate, Wear, Steering Valve	1
▲	5	74232	(000000-)	Pin, Valve, Steering	1
▲	6	21935	(000000-)	Bearing Kit [Cl]	1
▲	7	21933	(000000-)	Plug Assy [Cl]	1
▲	8	21934	(000000-)	Valve Assy, Relief [Cl]	1
▲	9	74243	(000000-)	Ring, Retainer, Steering Valve	1
▲	10	74196	(000000-)	Spring Kit, Scu [Cl]	1
▲	11	74244	(000000-)	Seal Kit, Steering [Cl]	1
▲	12	74245	(000000-)	Instr, Valve, Steering, Repair	1

Fig. 8 - Hydraulic Valve Breakdown, 1038566

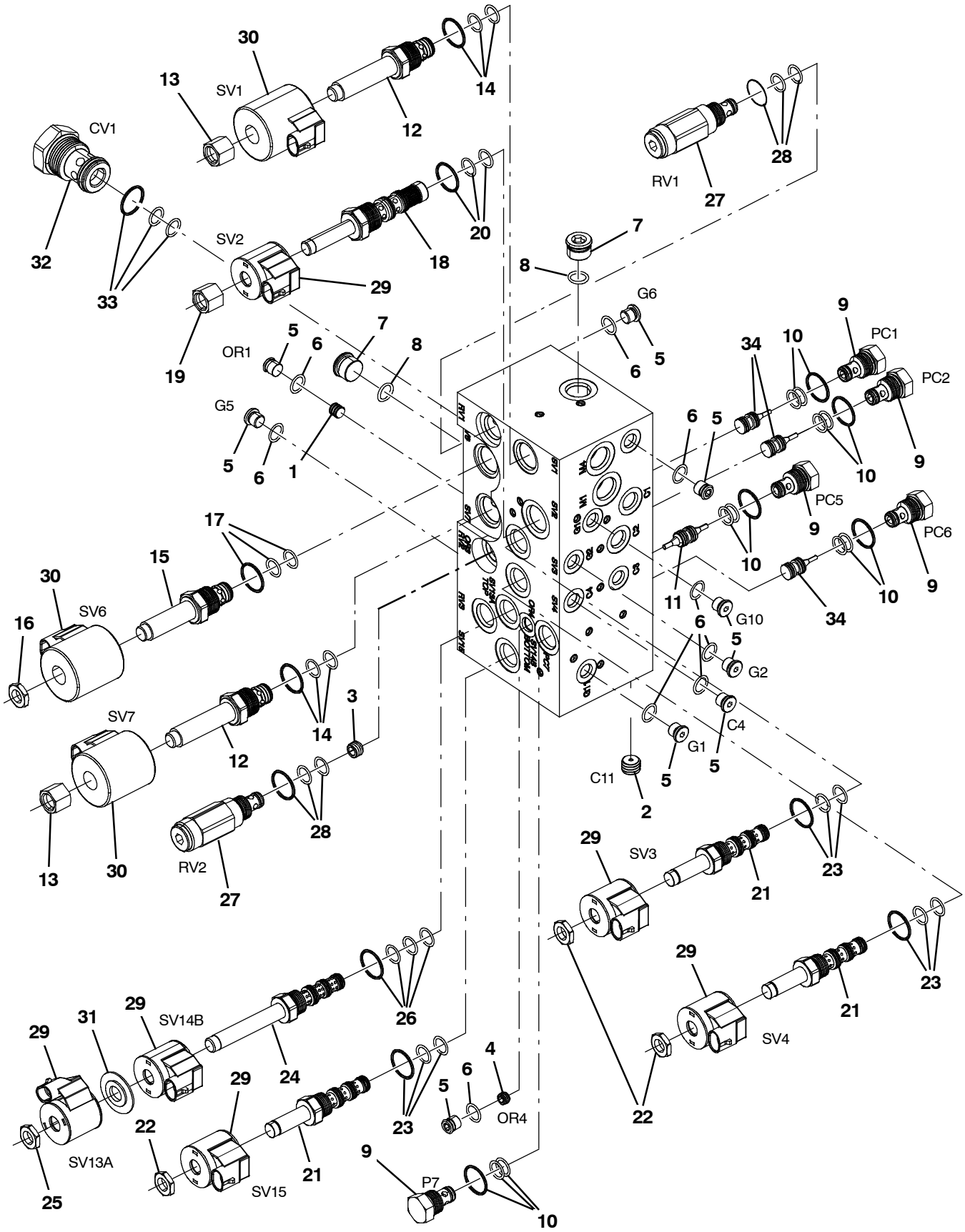

354643

Fig. 8 - Hydraulic Valve Breakdown, 1038566

	Ref.	Part No.	Serial Number	Description	Qty.
▽		1038566	(000000-)	Valve, Hyd, Solenoid, 12vdc	1
▲	1	373665	(000000-)	Plug, Orifice, Valve, Hyd, .046	1
▲	2	373633	(000000-)	Plug, Orifice, Valve, Hyd, .040	1
▲	3	9004475	(000000-)	Plug Orifice, Valve, Hyd, .140	1
▲	4	373660	(000000-)	Plug, Orifice, Valve, Hyd, .030	1
▲▽	5	74098	(000000-)	Fitting, Hyd, Plug, Om04	9
▲▲	6	77003	(000000-)	Seal, Org, .072 X 00.35id #04	1
▲▽	7	13904	(000000-)	Fitting, Plug, Org, #6, Valve [Cec]	2
▲▲	8	77005	(000000-)	Seal, Org, .078 X 00.47id #06	1
▲▽	9	373656	(000000-)	Valve, Check	5
▲▲	10	373647	(000000-)	Seal Kit, Cartridge	1
▲	11	373688	(000000-)	Spool, Pilot, Dual, Hyd	1
▲▽	12	373663	(000000-)	Valve, Stem, No	2
▲▲	13	373670	(000000-)	Nut, Solenoid	1
▲▲	14	373671	(000000-)	Seal Kit, Cartridge	1
▲▽	15	373667	(000000-)	Stem, Valve, Hyd	1
▲▲	16	373648	(000000-)	Nut, Coil, F/#8	1
▲▲	17	373671	(000000-)	Seal Kit, Cartridge	1
▲▽	18	373664	(000000-)	Cartridge, Psi Cntrl, Valve, Hyd	1
▲▲	19	373673	(000000-)	Nut, Solenoid	1
▲▲	20	373672	(000000-)	Seal Kit, Cartridge	1
▲▽	21	373657	(000000-)	Stem, Valve, Hyd [4w2p]	3
▲▲	22	373648	(000000-)	Nut, Coil, F/#8	1
▲▲	23	373647	(000000-)	Seal Kit, Cartridge	1
▲▽	24	373637	(000000-)	Valve, Cntrl, Solenoid	1
▲▲	25	373684	(000000-)	Nut, Coil, Nyl Patch	2
▲▲	26	373671	(000000-)	Seal Kit, Cartridge	1
▲▽	27	373666	(000000-)	Valve, Relief	2
▲▲	28	373647	(000000-)	Seal Kit, Cartridge	1
▲	29	373640	(000000-)	Solenoid, #8, 12vdc	6
▲	30	373642	(000000-)	Solenoid, #10, 12vdc	3
▲	31	373639	(000000-)	Spacer, Coil, #8	1
▲▽	32	373668	(000000-)	Valve, Check	1
▲▲	33	373671	(000000-)	Seal Kit, Cartridge	1
▲	34	373658	(000000-)	Spool, Pilot, Hyd	3

Fig. 9 - Hydraulic Valve Breakdown, 1072995

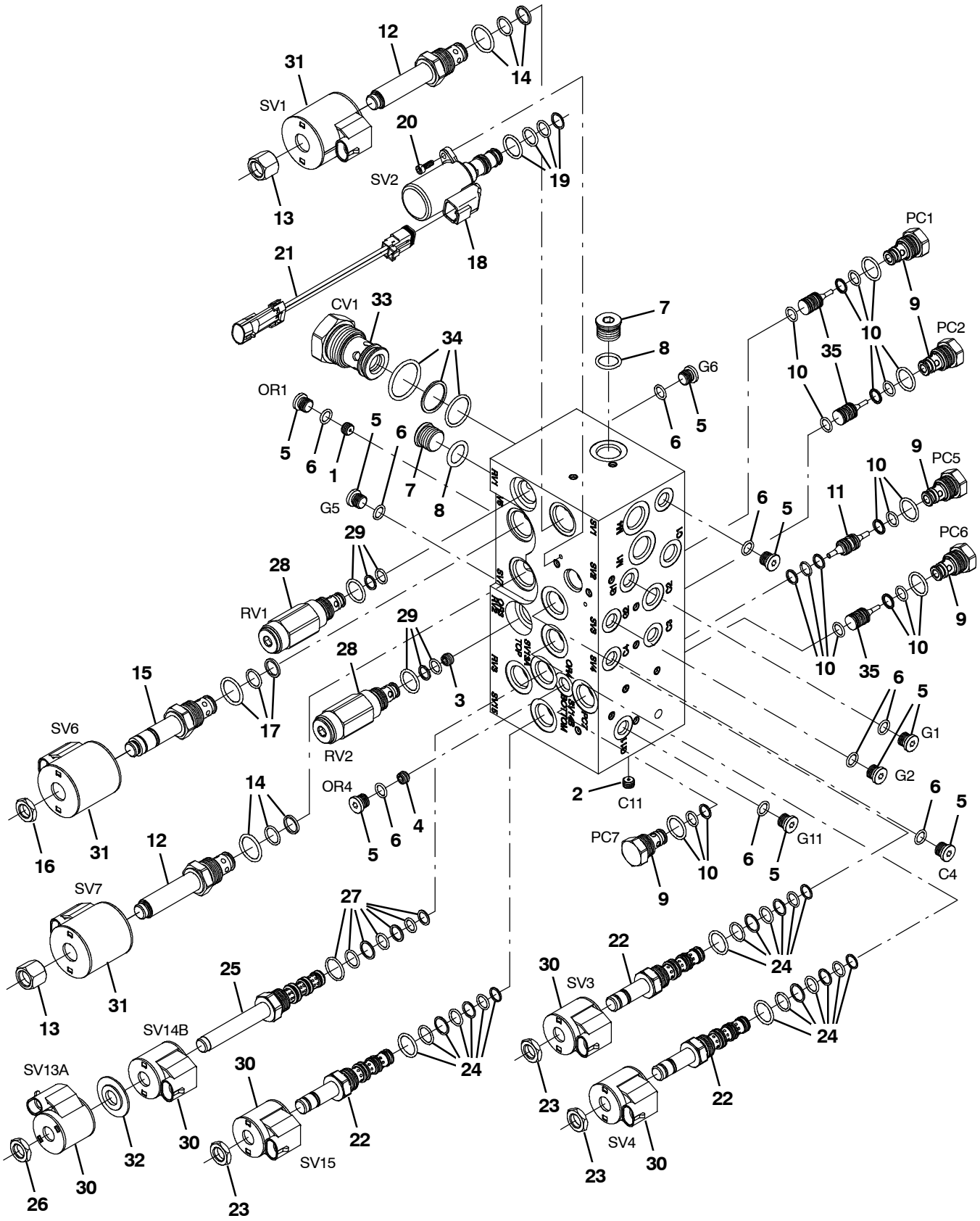

356401 - M20

Fig. 9 - Hydraulic Valve Breakdown, 1072995

	Ref.	Part No.	Serial Number	Description	Qty.
▽		1072995	(000000-)	Valve, Cntrl, Hyd, Solenoid, 12vdc 10gpm	1
▲	1	373665	(000000-)	Plug, Orifice, Valve, Hyd, .046	1
▲	2	373633	(000000-)	Plug, Orifice, Valve, Hyd, .040	1
▲	3	9004475	(000000-)	Plug Orifice, Valve, Hyd, .140	1
▲	4	373660	(000000-)	Plug, Orifice, Valve, Hyd, .030	1
▲▽	5	74098	(000000-)	Fitting, Hyd, Plug, Om04	9
▲▲	6	77003	(000000-)	Seal, Org, .072 X 00.35id #04	1
▲▽	7	13904	(000000-)	Fitting, Plug, Org, #6, Valve [Cec]	2
▲▲	8	77005	(000000-)	Seal, Org, .078 X 00.47id #06	1
▲▽	9	373656	(000000-)	Valve, Check	5
▲▲	10	373647	(000000-)	Seal Kit, Cartridge	1
▲	11	373688	(000000-)	Spool, Pilot, Dual, Hyd	1
▲▽	12	373663	(000000-)	Valve, Stem, No	2
▲▲	13	373670	(000000-)	Nut, Solenoid	1
▲▲	14	373671	(000000-)	Seal Kit, Cartridge	1
▲▽	15	373667	(000000-)	Stem, Valve, Hyd	1
▲▲	16	373648	(000000-)	Nut, Coil, F/#8	1
▲▲	17	373671	(000000-)	Seal Kit, Cartridge	1
▲▽	18	9011347	(000000-)	Valve Assy [Proportional]	1
▲▲	19	9011343	(000000-)	Seal Kit, Valve [Ehpr98]	1
▲▲	20	9011345	(000000-)	Screw, Mtg [Ehpr98]	2
▲▲	21	9011346	(000000-)	Harness, Jumper [Deutsch To Mpack]	1
▲▽	22	373657	(000000-)	Stem, Valve, Hyd [4w2p]	3
▲▲	23	373648	(000000-)	Nut, Coil, F/#8	1
▲▲	24	373647	(000000-)	Seal Kit, Cartridge	1
▲▽	25	373637	(000000-)	Valve, Cntrl, Solenoid	1
▲▲	26	373684	(000000-)	Nut, Coil, Nyl Patch	2
▲▲	27	373671	(000000-)	Seal Kit, Cartridge	1
▲▽	28	373666	(000000-)	Valve, Relief	2
▲▲	29	373647	(000000-)	Seal Kit, Cartridge	1
▲	30	373640	(000000-)	Solenoid, #8, 12vdc	5
▲	31	373642	(000000-)	Solenoid, #10, 12vdc	3
▲	32	373639	(000000-)	Spacer, Coil, #8	1
▲▽	33	373668	(000000-)	Valve, Check	1
▲▲	34	373671	(000000-)	Seal Kit, Cartridge	1
▲	35	373658	(000000-)	Spool, Pilot, Hyd	3

Fig. 10 - Hydraulic Valve Breakdown, 1037805

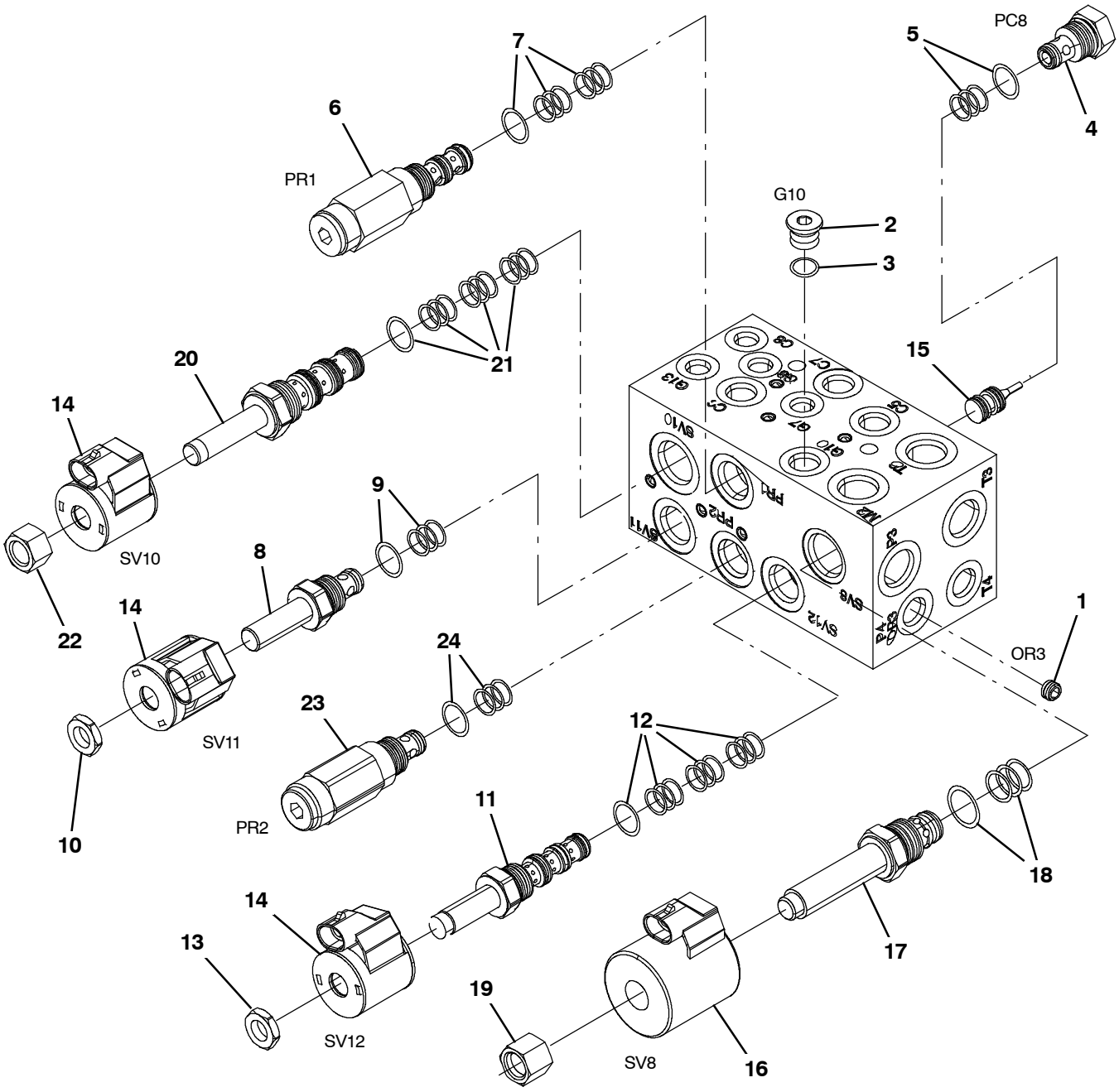

354581 - ALL

Fig. 10 - Hydraulic Valve Breakdown, 1037805

	Ref.	Part No.	Serial Number	Description	Qty.
▽		1037805	(000000-)	Valve, Cntrl, Hyd, Solenoid, 03/16gpm	1
▲	1	373633	(000000-)	Plug, Orifice, Valve, Hyd, .040	1
▲▽	2	13904	(000000-)	Fitting, Plug, Org, #6, Valve [Cec]	1
▲▲	3	77005	(000000-)	Seal, Org, .078 X 00.47id 06	1
▲▽	4	373656	(000000-)	Valve, Check	1
▲▲	5	373647	(000000-)	Seal Kit, Cartridge	1
▲▽	6	373661	(000000-)	Valve, Relief	1
▲▲	7	373647	(000000-)	Seal Kit, Cartridge	1
▲▽	8	373662	(000000-)	Stem, Valve, Hyd	1
▲▲	9	373647	(000000-)	Seal Kit, Cartridge	1
▲▲	10	373648	(000000-)	Nut, Coil, Nyl Patch	1
▲▽	11	373657	(000000-)	Stem, Valve, Hyd [4w2p]	1
▲▲	12	373647	(000000-)	Seal Kit, Cartridge	1
▲▲	13	373648	(000000-)	Nut, Coil, F/#8	1
▲	14	373640	(000000-)	Solenoid, #8, 12vdc	3
▲	15	373658	(000000-)	Spool, Pilot, Hyd	1
▲	16	373642	(000000-)	Solenoid, #10, 12vdc	1
▲▽	17	373663	(000000-)	Valve, Stem, No	1
▲▲	18	373646	(000000-)	Seal Kit, Cartridge	1
▲▲	19	373670	(000000-)	Nut, Solenoid	1
▲▽	20	373664	(000000-)	Cartridge, Psi Cntrl, Valve, Hyd	1
▲▲	21	373672	(000000-)	Seal Kit, Cartridge	1
▲▲	22	373673	(000000-)	Nut, Solenoid	1
▲▽	23	373683	(000000-)	Valve, Relief	1
▲▲	24	373647	(000000-)	Seal Kit, Cartridge	1

Fig. 11 - Hydraulic Valve Breakdown, 1072997

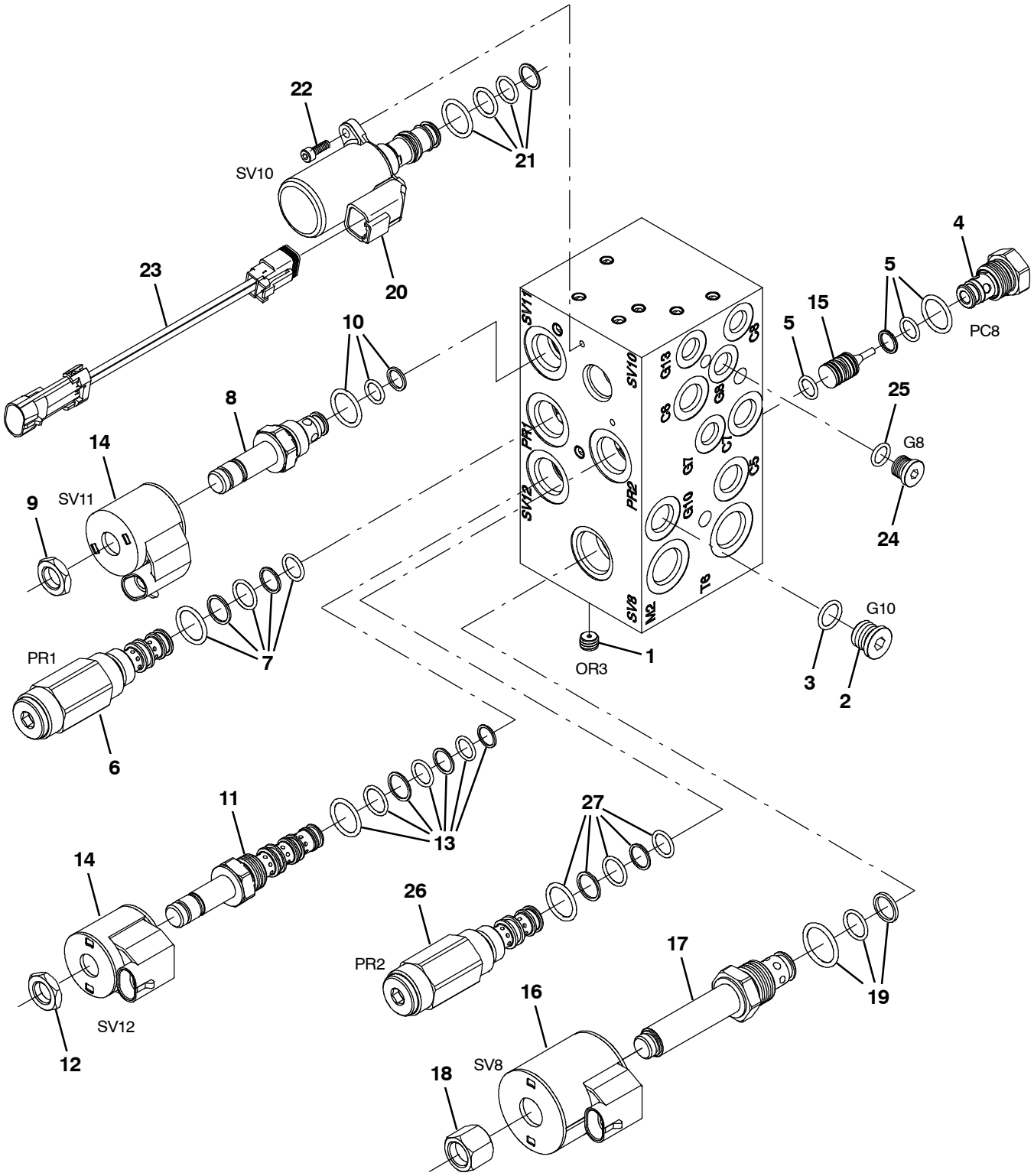

356403 - ALL

Fig. 11 - Hydraulic Valve Breakdown, 1072997

	Ref.	Part No.	Serial Number	Description	Qty.
▽		1072997	(000000-)	Valve, Cntrl, Hyd, Solenoid, 03/16gpm	1
▲	1	373633	(000000-)	Plug, Orifice, Valve, Hyd, .040	1
▲▽	2	13904	(000000-)	Fitting, Plug, Org, #6, Valve [Cec]	1
▲▲	3	77005	(000000-)	Seal, Org, .078 X 00.47id 06	1
▲▽	4	373656	(000000-)	Valve, Check	1
▲▲	5	373647	(000000-)	Seal Kit, Cartridge	1
▲▽	6	373661	(000000-)	Valve, Relief	2
▲▲	7	373647	(000000-)	Seal Kit, Cartridge	1
▲▽	8	373662	(000000-)	Stem, Valve, Hyd	1
▲▲	9	373648	(000000-)	Nut, Coil, Nyl Patch	1
▲▲	10	373647	(000000-)	Seal Kit, Cartridge	1
▲▽	11	373657	(000000-)	Stem, Valve, Hyd [4w2p]	1
▲▲	12	373648	(000000-)	Nut, Coil, F/#8	1
▲▲	13	373647	(000000-)	Seal Kit, Cartridge	1
▲	14	373640	(000000-)	Solenoid, #8, 12vdc	3
▲	15	373658	(000000-)	Spool, Pilot, Hyd	1
▲	16	373642	(000000-)	Solenoid, #10, 12vdc	1
▲▽	17	373663	(000000-)	Valve, Stem, No	1
▲▲	18	373670	(000000-)	Nut, Solenoid	1
▲▲	19	373646	(000000-)	Seal Kit, Cartridge	1
▲▽	20	9011347	(000000-)	Valve Assy [Proportional]	1
▲▲	21	9011343	(000000-)	Seal Kit, Valve [Ehpr98]	1
▲▲	22	9011345	(000000-)	Screw, Mtg [Ehpr98]	2
▲▲	23	9011346	(000000-)	Harness, Jumper [Deutsch To Mpack]	1
▲▽	24	13904	(000000-)	Fitting, Plug, Org, #6, Valve [Cec]	1
▲▲	25	77005	(000000-)	Seal, Org, .078 X 00.47id 06	1
▲▽	26	373683	(000000-)	Valve, Relief	1
▲▲	27	373647	(000000-)	Seal Kit, Cartridge	1

Fig. 12 - Hydraulic Motor Breakdown, 53485

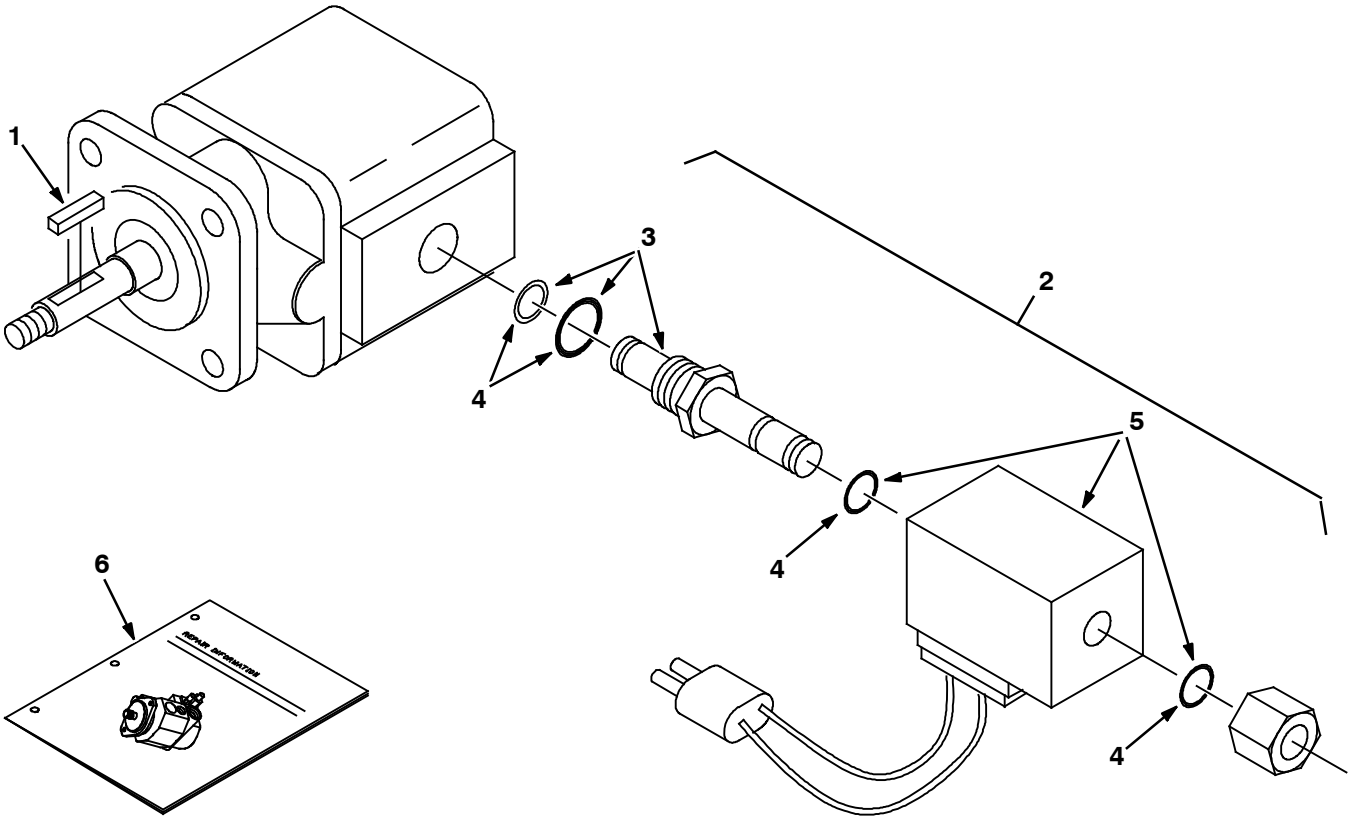

07490 - 09670

	Ref.	Part No.	Serial Number	Description	Qty.
▽		53485	(000000-)	Motor, Hyd, Gear, Ext 0.19 Rh 3000	1
▲		74233	(000000-)	Kit, Seal, Motor, Hyd, Gear[Barns]	1
▲	1	00966	(000000-)	Key, Sq, 0.12 X 0.12, 0.75l	1
▲▽	2	54095	(000000-)	Valve, Hyd Cartridge 10no/- 0	1
▲▲	3	59378	(000000-)	Valve Stem, N.O.Valve, Hyd	1
▲▲	4	48813	(000000-)	Kit, Seal, Valve, Hyd [Cec]	1
▲▲	5	35493	(000000-)	Solenoid, 12v, Valve, Hyd [Cec]	1
	6	IB3614	(000000-)	Instr, Seal Kit, Motor	1

Fig. 13 - Metering Solution Pump Breakdown, 73260

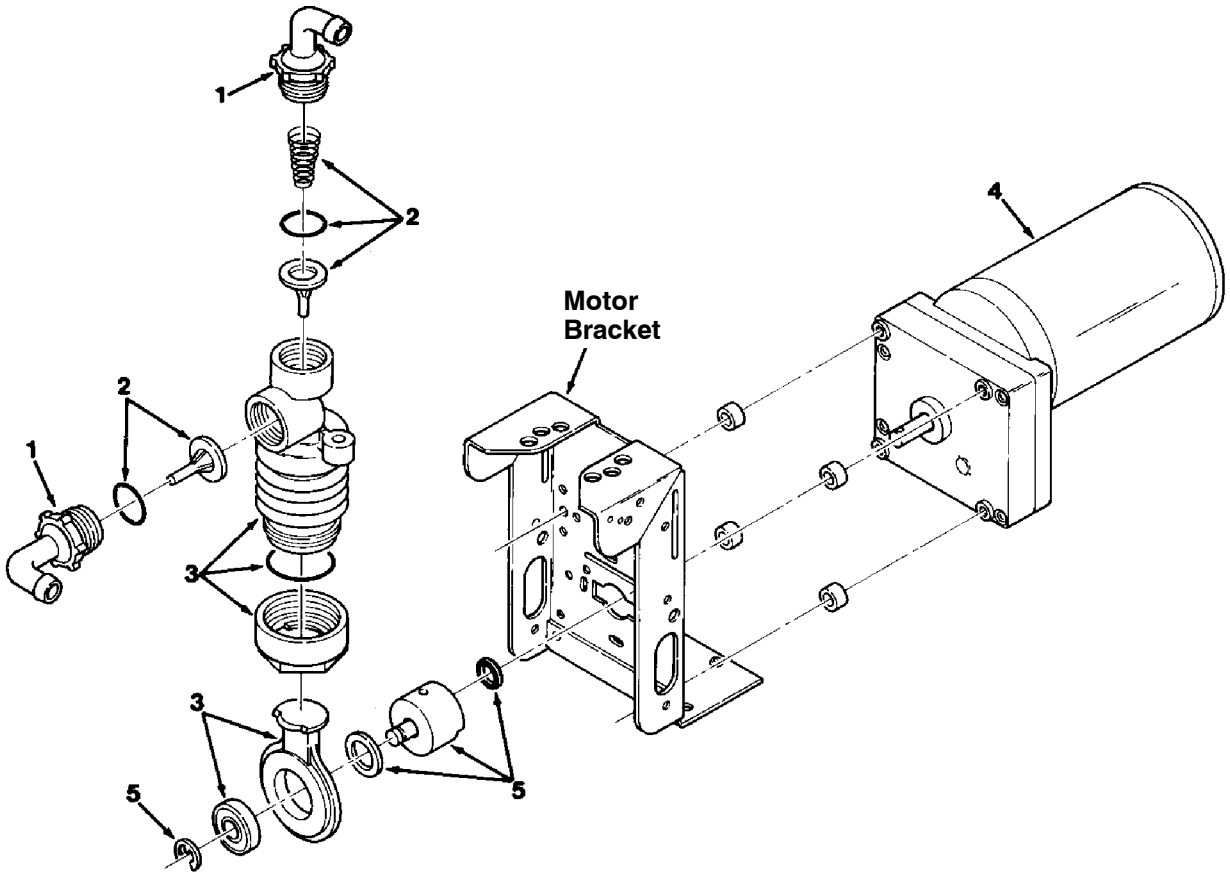

00112 - ALL

	Ref.	Part No.	Serial Number	Description	Qty.
▽		73260	(000000-)	Pump, Detgt, 14vdc, 150ml/Min 20psi	1
▲	1	63923	(000000-)	Tubing Connctr.Kit, Gorman Pmp	1
▲	2	21659	(000000-)	Valve Kit, Poppet, Gorman Rupp	1
▲	3	21657	(000000-)	Kit, Bellows, Pump, Detgt	1
▲	4	78875	(000000-)	Motor, Ele, Gear, 14vdc, Pump, Detgt	1
▲	5	02430	(000000-)	Crank Kit, Pump, F/79323, Replmt	1

Fig. 14 - Water Pump Breakdown, 1026743

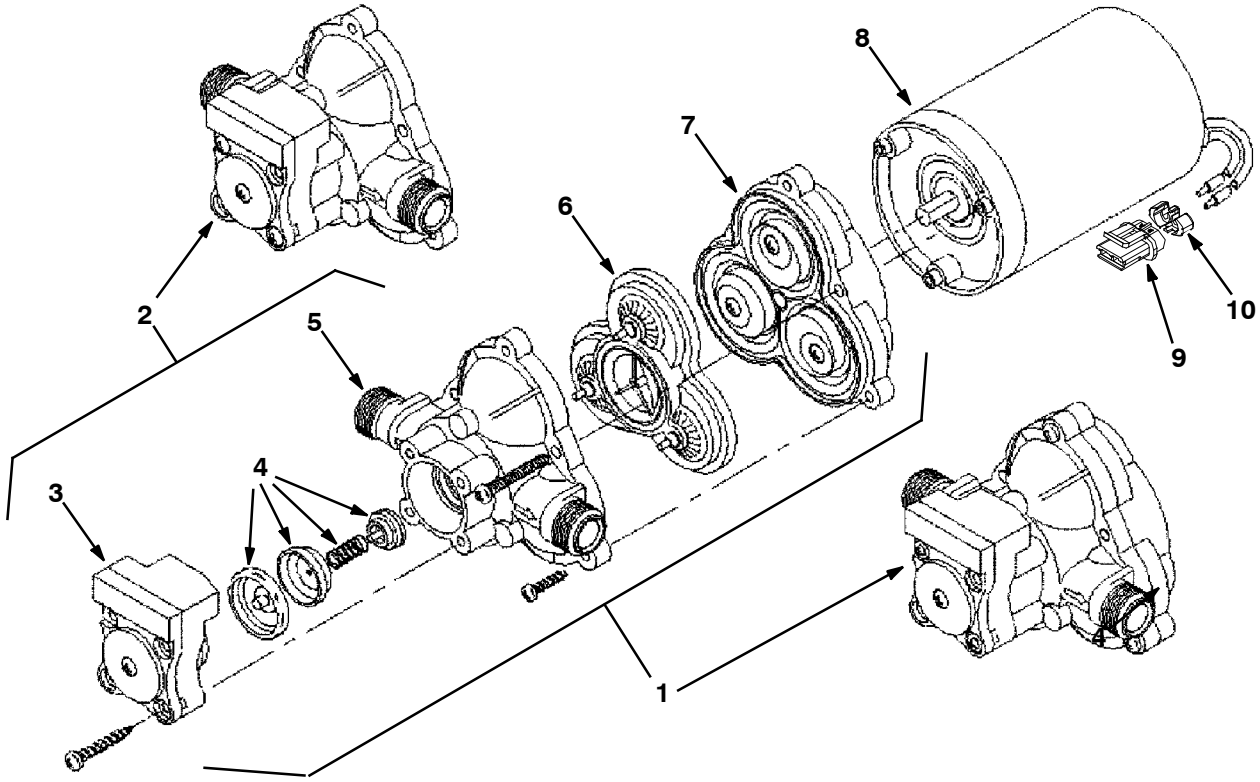

07490 - 09670

	Ref.	Part No.	Serial Number	Description	Qty.
▽		1026743	(000000-)	Pump, Diaphragm	1
▲	1	1031802	(000000-)	Complete Pump Kit, Pump, Repair,	1
▲	2	1031803	(000000-)	Hsg & Switch Kit, Pump, Repair,	1
▲	3	1031796	(000000-)	Switch Kit, Pump, Repair,	1
▲	4	1031797	(000000-)	Chech Valve Kit, Pump, Repair,	1
▲	5	1031798	(000000-)	Upper Hsg Kit, Pump, Repair,	1
▲	6	1031799	(000000-)	Bypass Valve Kit, Pump, Repair,	1
▲	7	1031800	(000000-)	Diaphragm Kit, Pump, Repair,	1
▲	8	1031801	(000000-)	Motor Kit, Pump, Repair,	1
▲	9	78950	(000000-)	Connector, Fem, 02cav, Mp280 Sealed	1
▲	10	78952	(000000-)	Lock, Secondary, 2cav, Mp280 Sealed	1
▲		78951	(000000-)	Terminal, Fem, Mp280, Sealed, 18- 16ga	2
▲		10917	(000000-)	Seal, Wire, 14/16ga [Wp / Mp280 Sealed]	2

Fig. 15 - Water Pump Motor Breakdown, 1038855

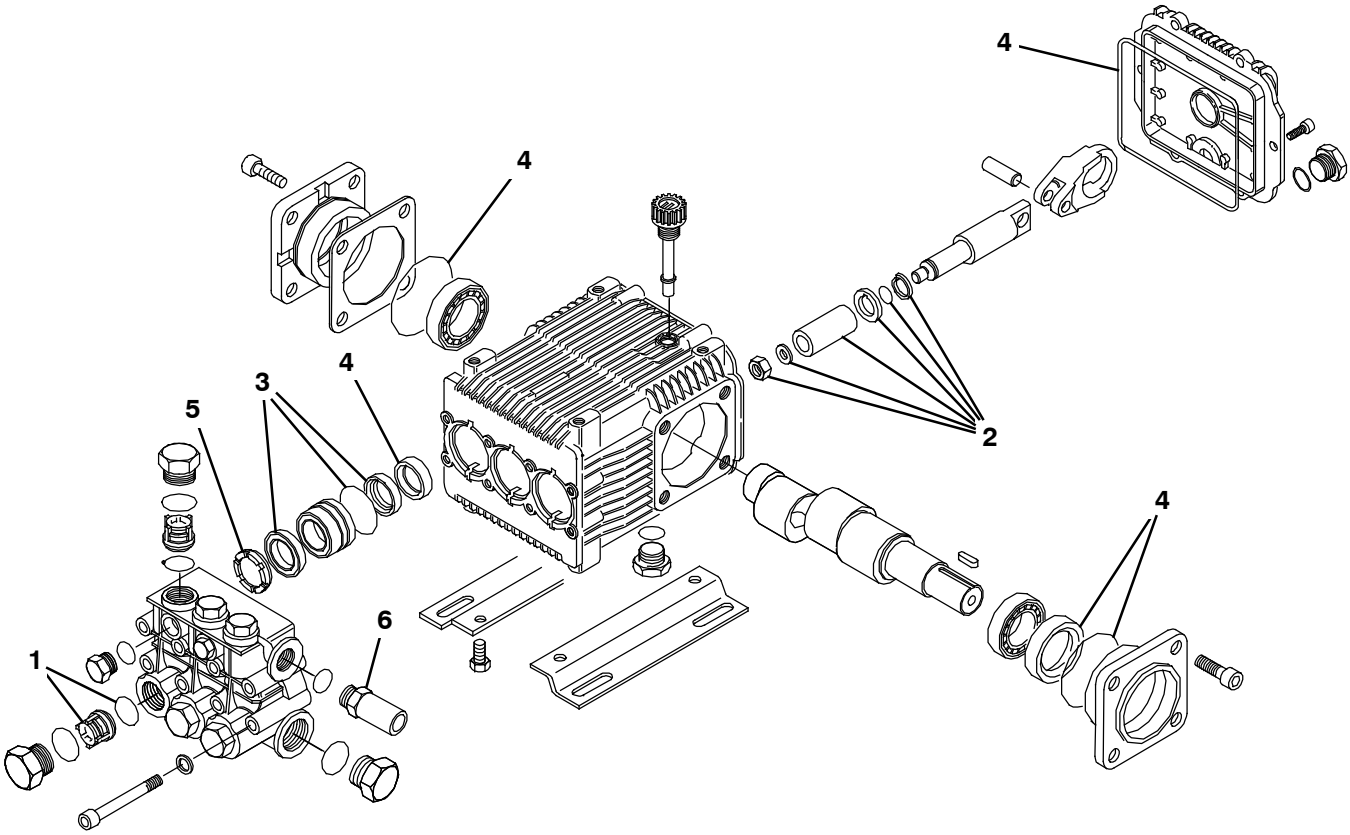

354649

	Ref.	Part No.	Serial Number	Description	Qty.
▽		1038855	(000000-)	Pump, Hyd, Press Washer	1
▲	1	9004290	(000000-)	Valve Kit	1
▲	2	9004291	(000000-)	Piston Kit	1
▲	3	9004288	(000000-)	Seal Kit [Buna]	1
▲	3	9004272	(000000-)	Seal Kit [Vitron]	1
▲	4	9004289	(000000-)	Seal Kit, Oil	1
▲	5	9004292	(000000-)	Ring Kit, Sppt	1
▲	6	9014260	(000000-)	Pop Valve	1

Fig. 16 - ec-H20 Module Assembly Breakdown, 9007882

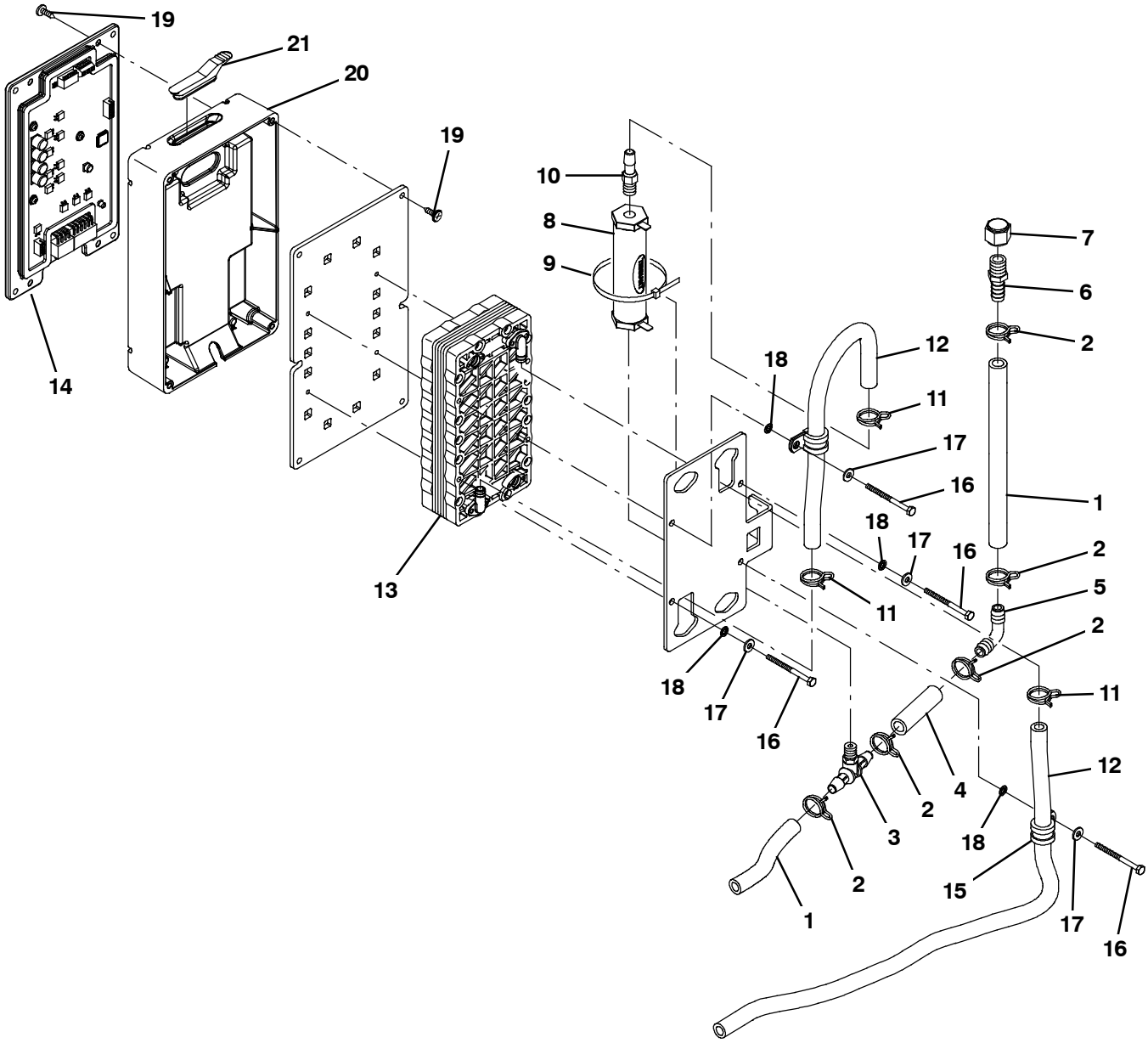

356035

Fig. 16 - ec-H20 Module Assembly Breakdown, 9007882

	Ref.	Part No.	Serial Number	Description	Qty.
▽		9007882	(000000-)	Module Kit, Replmt [Ec-H20]	1
▲	1	1014974	(000000-)	Hose, Afmkt, Pvc, Brd, 0.38id, 02ft, Clr	2
▲	2	607775	(000000-)	Clamp, Hose, Wir, .63 - .66, Blk	5
▲	3	1060517	(000000-)	Fitting, Plstc, Tee, Bm06/Pm02/Bm06	1
▲	4	1014971	(000000-)	Hose, Afmkt, Pvc, Brd, 0.38id, 01ft, Clr	1
▲	5	20951	(000000-)	Fitting, Plstc, E90, Bm06/Bm06	1
▲	6	150540	(000000-)	Fitting, Plstc, Str, Bm06/Pm04	1
▲	7	1005435	(000000-)	Fitting, Plstc, Pipe, Cap, Pf04	1
▲	8	1038159	(000000-)	Electrode, Cylindrical	1
▲	9	44961	(000000-)	Tie, Cable, Nyl, 14.5l .30w 4.0 Max D	1
▲	10	1060695	(000000-)	Fitting, Plstc, Str, Pm02/Bm05	1
▲	11	1053464	(000000-)	Clamp, Hose, Wir, .52 - .56, Yel	3
▲	12	1052336	(000000-)	Hose, Afmkt, PVC, Brd, 0.31Id, 03Ft, Clr	1
▲	13	1057637	(000000-)	Electrode, 5 Plate, High Flow	1
▲	14	9007883	(000000-)	Controller Kit, Replmt [Ec-H20]	1
▲	15	1016354	(000000-)	Clamp, Cable, Ss, 0.50d X 0.50w [Insul]	2
▲	16	32509	(000000-)	Screw, Hex, M4 X 0.70 X 50, Ss	4
▲	17	41579	(000000-)	Washer, Flat, 08, Ss	4
▲	18	02938	(000000-)	Washer, Lock, Int, 08, Ss	4
▲	19	1018155	(000000-)	Screw, Pan, Phl, M5 X 0.80 X 16, Tcut,Ss	8
▲	20	1037032	(000000-)	Housing, Bottom	1
▲	21	1054776	(000000-)	Grommet, Blind	1

Fig. 17 - Seat Breakdown, 1072456

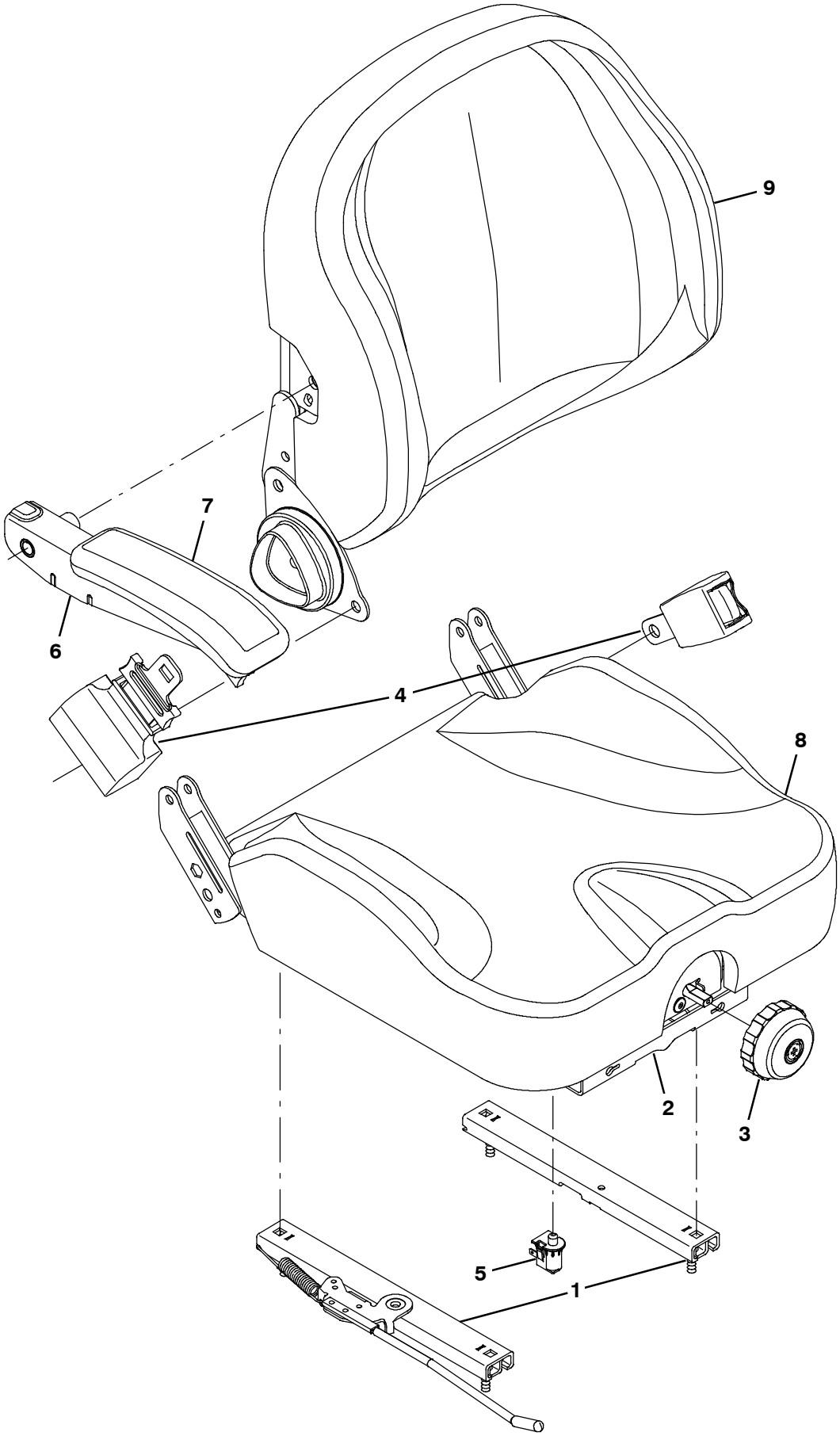

356526

Fig. 17 - Seat Breakdown, 1072456

	Ref.	Part No.	Serial Number	Description	Qty.
▽		1072456	(000000-)	Seat	1
▲	1	9012585	(000000-)	Track Assy, Slide	1
▲	2	9012587	(000000-)	Bellows, Seat	1
▲	3	9012589	(000000-)	Knobs, Adjmt, Weight	1
▲	4	9012590	(000000-)	Seatbelt	1
▲	5	9012591	(000000-)	Switch, Seat	1
▲	6	9012592	(000000-)	Armrest	1
▲	7	9012593	(000000-)	Pad, Armrest	1
▲	8	9012594	(000000-)	Cover, Cushion	1
▲	9	9012595	(000000-)	Cover, Backrest	1

Fig. 18 - FaST Injector Assembly Breakdown, 9008868

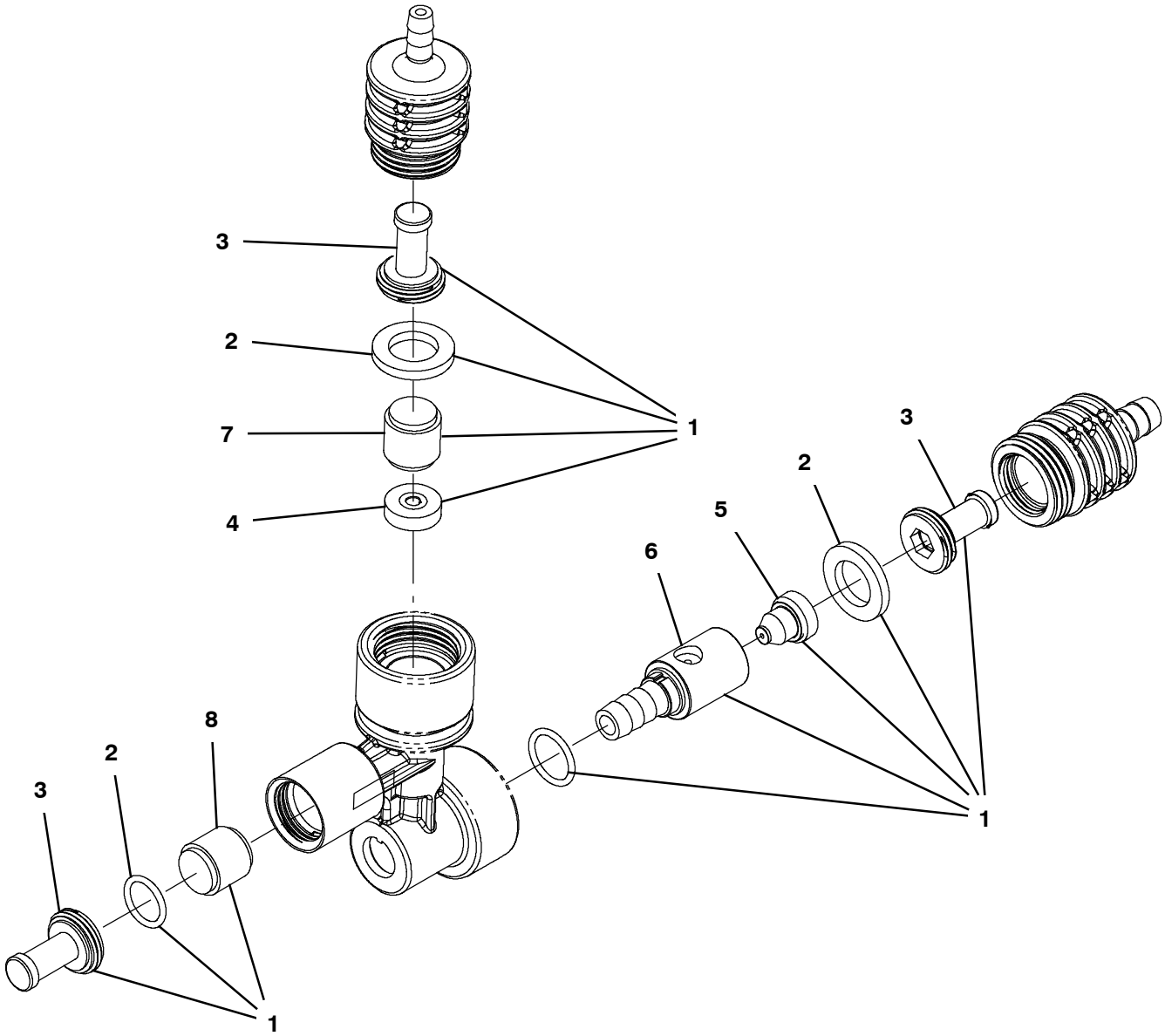

356271

	Ref.	Part No.	Serial Number	Description	Qty.
▽		9008868	(000000-)	FaST Kit, Injector [M20/T20/m30 FaST III}	1
▲▽	1	9008757	(000000-)	FaST Kit, Ci [inj Rebld, M30/M20 III]	1
▲▲	2	9008848	(000000-)	FaST Kit, Seal, injector, Ci [FaST III]	1
▲▲	3	9003009	(000000-)	FaST Kit, Ci, Injector Filters[FaST Ii+]	1
▲▲	4	1059878	(000000-)	Plate Assy, Orifice, 0.0105Id, Green	1
▲▲	5	1042710	(000000-)	Plug, Orifice, 0.060, Ss [FaST Ii+]	1
▲▲	6	1059234	(000000-)	Insert, :Lrg [Venturi, FaST III]	1
▲▲	7	1030444	(000000-)	Valve, Check, 0002psi [FaST Ii+]	1
▲▲	8	1030441	(000000-)	Valve, Check, 0005psi [FaST Ii+]	1

SECTION 5

Contents **Page**

Fig. 1 - Crankcase Group 5-2
Fig. 2 - Oil Pan Group 5-4
Fig. 3 - Cylinder Head Group 5-5
Fig. 4 - Gear Case Group 5-6
Fig. 5 - Water Pump Group 5-8
Fig. 6 - Main Bearing Case Group 5-9
Fig. 7 - Head Cover Group 5-10
Fig. 8 - Exhaust Manifold Group 5-11
Fig. 9 - Inlet Manifold Group 5-12
Fig. 10 - Valve, Rocker Arm Group 5-13
Fig. 11 - Camshaft Group 5-14
Fig. 12 - Piston and Crankshaft Group 5-16
Fig. 13 - Flywheel Group 5-18
Fig. 14 - Starter Breakdown, 74405 5-19
Fig. 15 - Nozzle Holder and Glow Plug Group 5-20
Fig. 16 - Injection Pump Group 5-22
Fig. 17 - Injection Pump Breakdown 5-24
Fig. 18 - Fuel Camshaft Group 5-26
Fig. 19 - Idling Group 5-27
Fig. 20 - Speed Control Plate Group 5-28
Fig. 21 - Governor Group 5-29
Fig. 22 - Water Flange Group 5-30
Fig. 23 - Turbo Charger Group 5-31
Fig. 24 - Oil Cooler Group 5-32

Fig. 1 - Crankcase Group

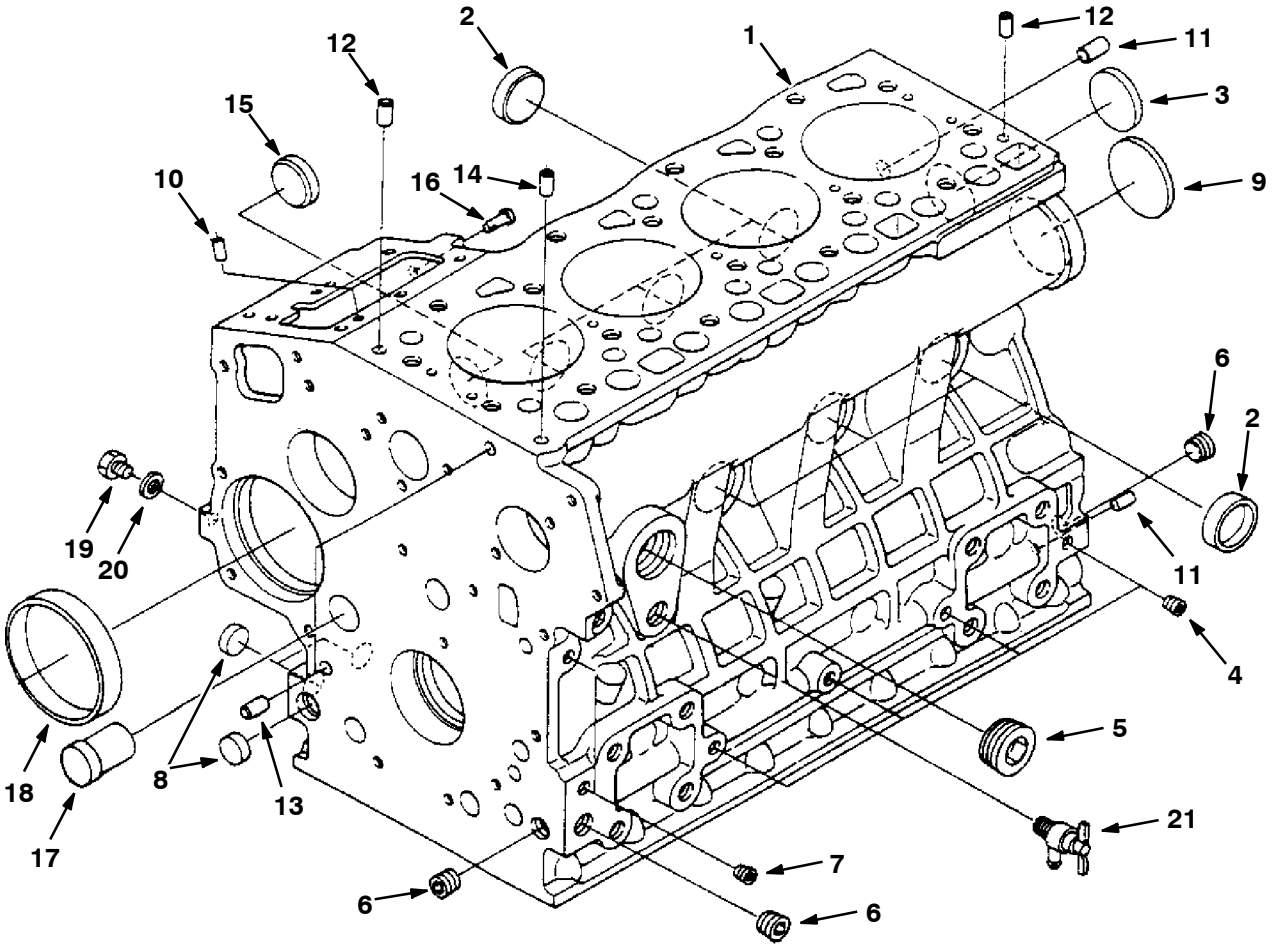

Fig. 1 - Crankcase Group

	Ref.	Part No.	Description	Qty.
▽	1	9004335	Crankcase, Complt [Ku]	1
▲	2	70998	Plug, Cup, Sealing [Ku]	6
▲	3	39087	Plug, Cup, Sealing [Ku]	1
▲	4	39088	Fitting, Pipe, Plug [Ku]	4
▲	5	9004336	Bolt [Ku]	1
▲	6	71985	Fitting, Pipe, Plug [Ku]	3
▲	7	39051	Fitting, Pipe, Plug [Ku]	2
▲	8	361436	Plug, Cup, Sealing [Ku]	3
▲	9	71986	Plug, Cup, Sealing [Ku]	1
▲	10	71987	Pin, Dowel [Ku]	2
▲	11	71988	Pin, Dowel [Ku]	2
▲	12	71989	Pin, Dowel [Ku]	2
▲	13	71990	Pin, Eng [Ku]	2
▲	14	71991	Tube, Pin [Ku]	1
▲	15	71992	Plug, Cup, Sealing [Ku]	1
▲	16	9004337	Pin, Start, Spring	1
▲	17	71993	Plug, Eng [Ku]	1
▲	18	70887	Bushing, Gear, Gov [Ku]	1
▲	19	39062	Fitting, Plug [Ku]	1
▲	20	393570	Gasket	1
	21	70888	Fitting, Draincock [Ku]	1

Fig. 2 - Oil Pan Group

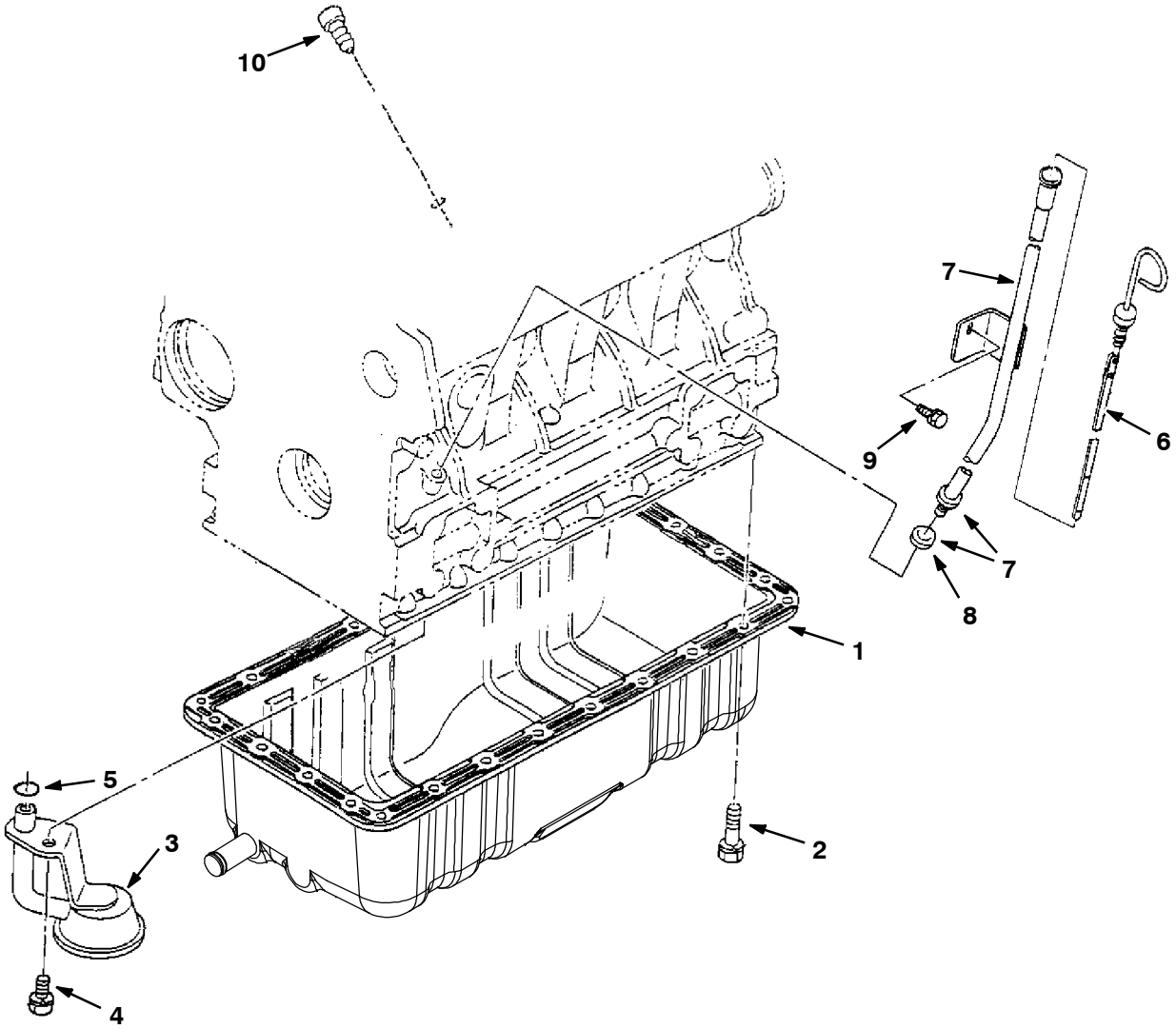

07409 - 7400, 6600L, D

Ref.	Part No.	Description	Qty.
1	1023144	Pan, Oil, Dsl	1
2	9004338	Bolt [Ku]	26
3	9003888	Filter, Oil [Ku]	1
4	39094	Screw, Hex [Ku]	1
5	9004339	O- Ring [Ku]	1
6	9003889	Dipstick, Oil [Ku]	1
7	9003890	Gauge Assy, Oil [Ku]	1
8	361366	Seal, Org [Ku]	1
9	39073	Screw, Hex [Ku]	1
10	9004348	Plug, Gauge, Oil [Ku]	1

Fig. 3 - Cylinder Head Group

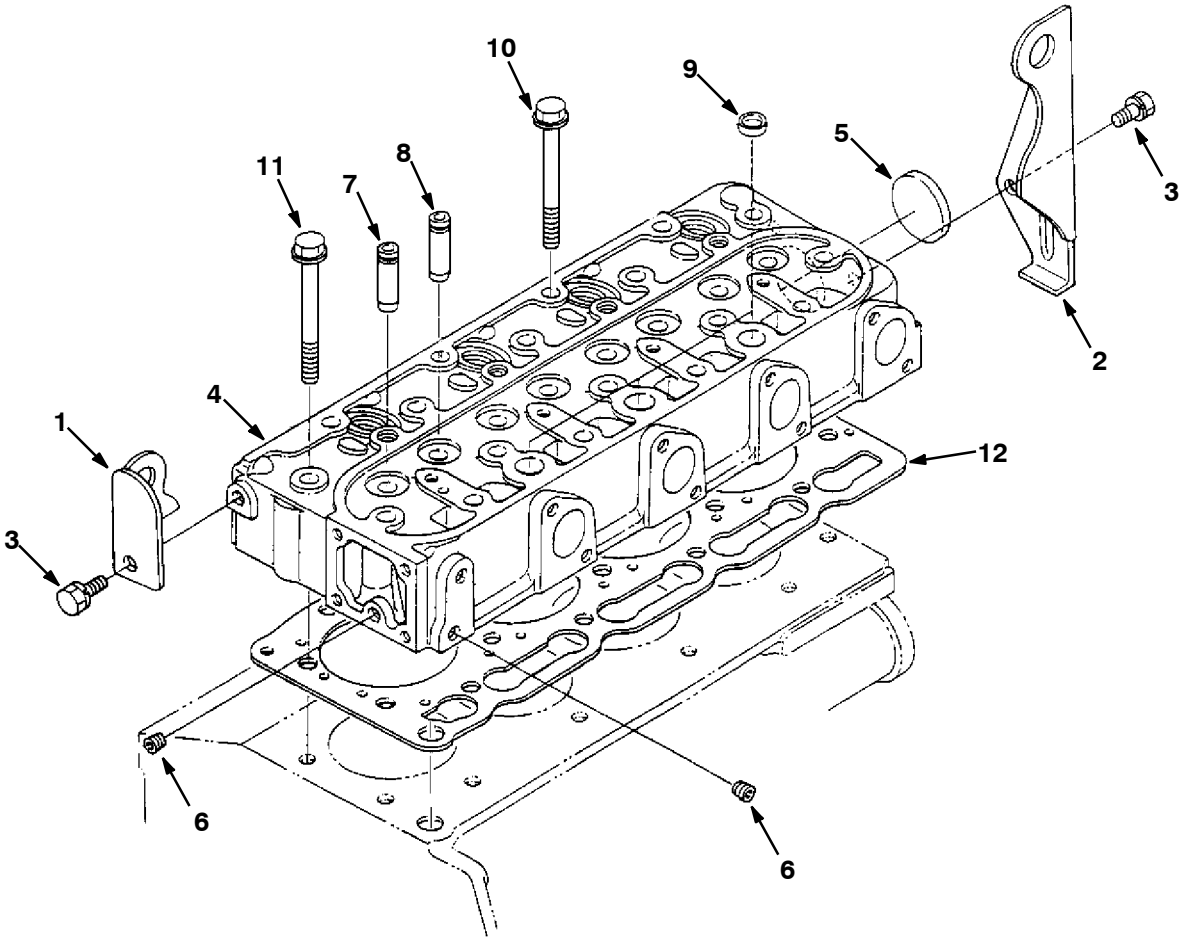

	Ref.	Part No.	Description	Qty.
	1	71996	Ear, Lifting, Eng [Ku]	1
	2	71997	Ear, Lifting, Eng [Ku]	1
	3	39073	Screw, Hex [Ku]	2
▽	4	9004340	Head, Cylinder [Ku]	1
▲	5	393504	Cap, Sealing	1
▲	6	39088	Fitting, Pipe, Plug [Ku]	2
▲	7	372906	Guide, Valve, Inlet	4
▲	8	372907	Guide, Valve, Exhaust	4
▲	9	361372	Plug, Cup, Sealing [Ku]	3
	10	70897	Screw, Hex, Head, Cyl [Ku]	18
	11	70898	Bolt	1
	12	9004341	Gasket, Head, Cyl [Ku]	1

Fig. 4 - Gear Case Group

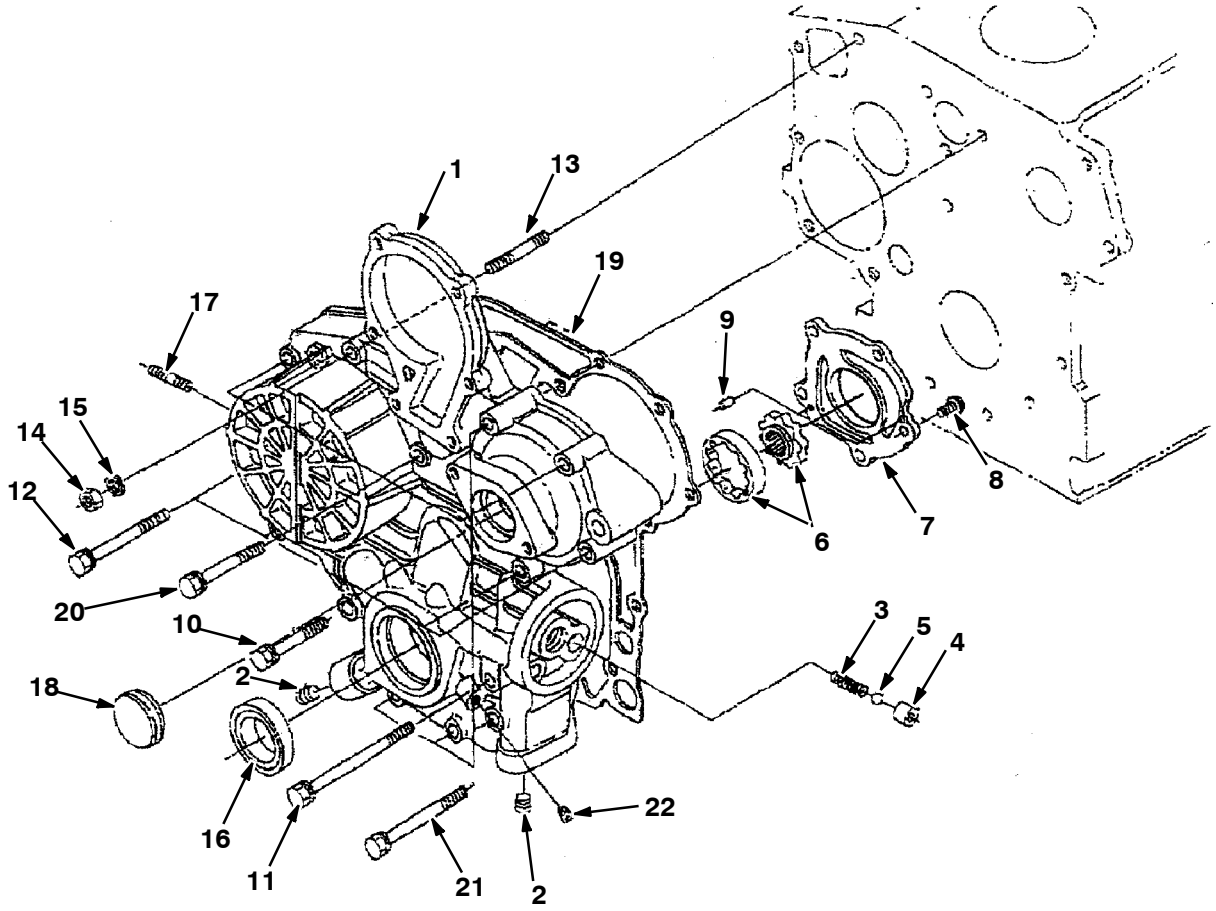

Fig. 4 - Gear Case Group

	Ref.	Part No.	Description	Qty.
▽	1	9004342	Gear, Case [Ku]	1
▲	2	361401	Fitting, Pipe, Plug [Ku]	4
▲	3	70900	Spring, Cmpr, Relief [Ku]	1
▲	4	70901	Tube, Seat, Valve, Oil [Ku]	1
▲	5	70902	Ball, Relief, Oil [Ku]	1
▲	6	70903	Pump, Oil, Eng [Ku]	1
▲	7	9004343	Pump, Oil, Cover [Ku]	1
▲	8	9004345	Screw [Ku]	5
▲	9	9004344	Pin, Straight [Ku]	1
	10	72014	Screw, Hex [Ku]	1
	11	72015	Screw, Hex [Ku]	2
	12	72016	Bolt	1
	13	9004346	Stud [Ku]	1
	14	39121	Nut, Hex [Ku]	1
	15	39065	Washer, Lock, Split [Ku]	1
	16	368055	Seal, Oil, Eng [Ku]	1
	17	9004347	Stud [Ku]	1
	18	72019	Cover	1
	19	70912	Gasket, Case, Gear [Ku]	1
	20	72993	Screw, Hex [Ku]	3
	21	384872	Bolt	4
	22	39051	Fitting, Pipe, Plug [Ku]	1

Fig. 5 - Water Pump Group

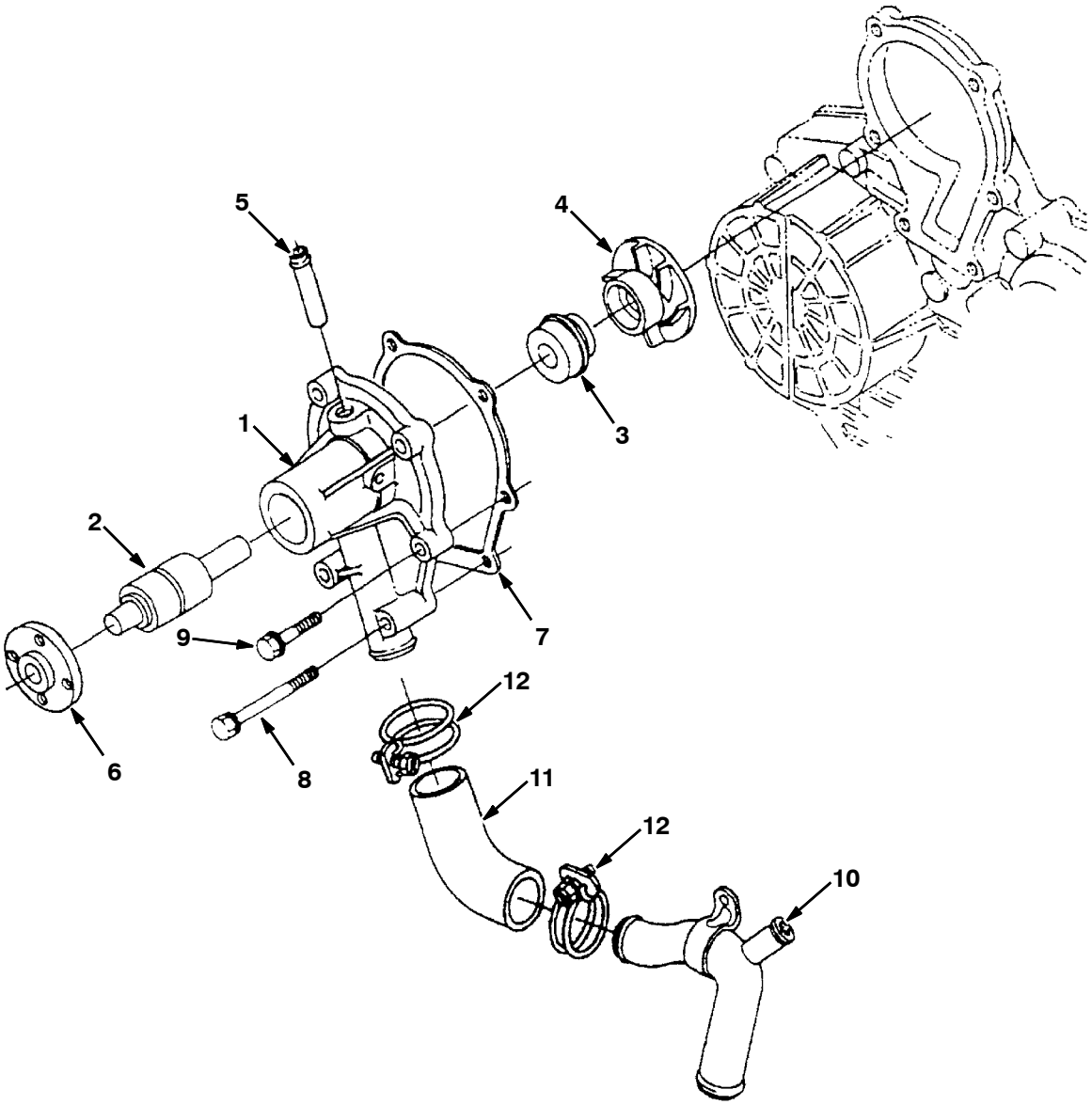

	Ref.	Part No.	Description	Qty.
▽	1	9004402	Pump, Water Assy [Ku]	1
▲	2	9004403	Bearing [Ku]	1
▲	3	9004404	Seal, Mechanical Assy [Ku]	1
▲	4	9004405	Impeller, Pump, Water [Ku]	1
▲	5	361440	Fitting, Pipe, Water [Ku]	1
▲	6	70919	Flange, Pump, Water [Ku]	1
▲	7	70920	Gasket, Pump, Water [Ku]	1
	8	9004407	Bolt [Ku]	2
	9	9004406	Bolt [Ku]	4
	10	368317	Hose, Water	1
	11	9003869	Pipe, Water [Kubota]	1
	12	9003870	Clamp [Kubota]	2

Fig. 6 - Main Bearing Case Group

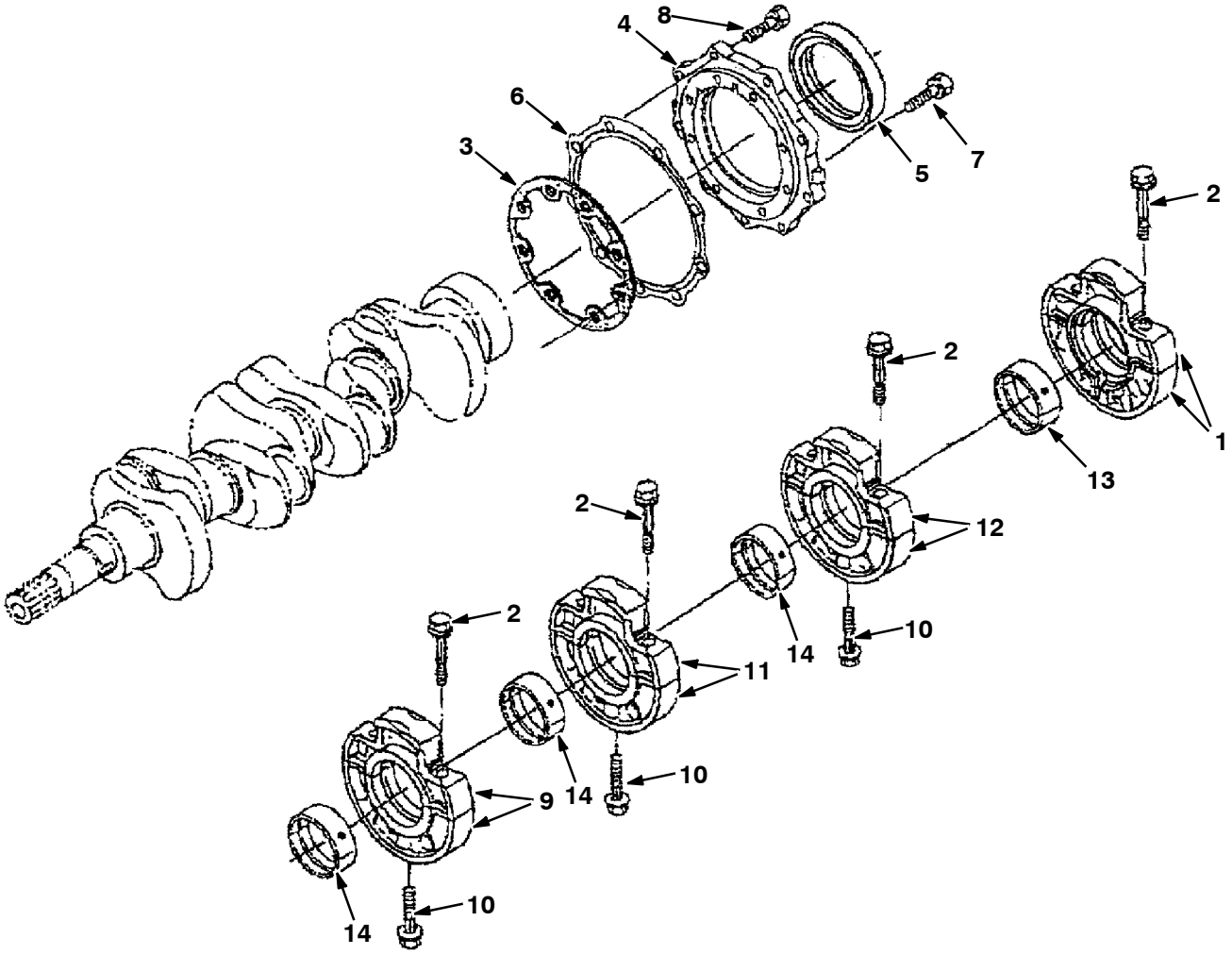

07417 - 6200L, 7400, 8200L, D

Ref.	Part No.	Description	Qty.
1	9004349	Bearing, Case [Ku]	1
2	72998	Screw, Hex, Case, Brg, Main [Ku]	8
3	9004350	Gasket, Bearing, Case [Ku]	1
4	70923	Cover, Brg Case, Eng [Ku]	1
5	9004351	Seal, Oil [Ku]	1
6	70925	Gasket, Case, Gear [Ku]	1
7	72999	Screw, Hex [Ku]	8
8	371017	Bolt	9
9	9004352	Bearing, Case, Main Assy [Ku]	1
10	73479	Screw, Hex, Case, Brg, Main [Ku]	3
11	9004354	Bearing, Case, Main Assy [Ku]	1
12	9004356	Bearing, Case, Main Assy [Ku]	1
13	70951	Bearing, Cshft, Std [Ku]	1
14	9004353	Crankshaft, Metal [Ku]	3

Fig. 7 - Head Cover Group

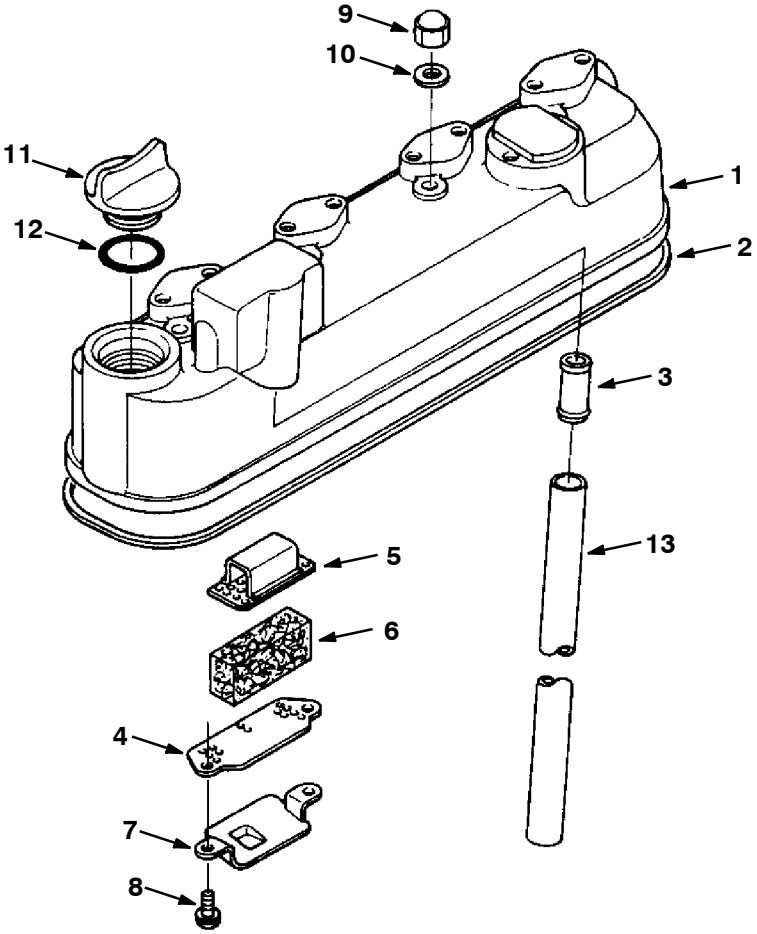

	Ref.	Part No.	Description	Qty.
▽	1	73480	Cover, Cylinder Head	1
▲	2	70929	Gasket, Head Cover	1
▲	3	73481	Joint, Breather Pipe	1
▲	4	70930	Plate, Element 1	1
▲	5	70931	Plate, Element 2	1
▲	6	70932	Element, Breather	1
▲	7	70933	Oil Shield, Breather	1
▲	8	73482	Screw, With Washer	2
	9	73483	Nut, Cap	4
	10	73484	Gasket	4
	11	361374	Plug, Oil Filler	1
	12	70913	O- Ring	1
	13	73485	Pipe, Breather	1

Fig. 8 - Exhaust Manifold Group

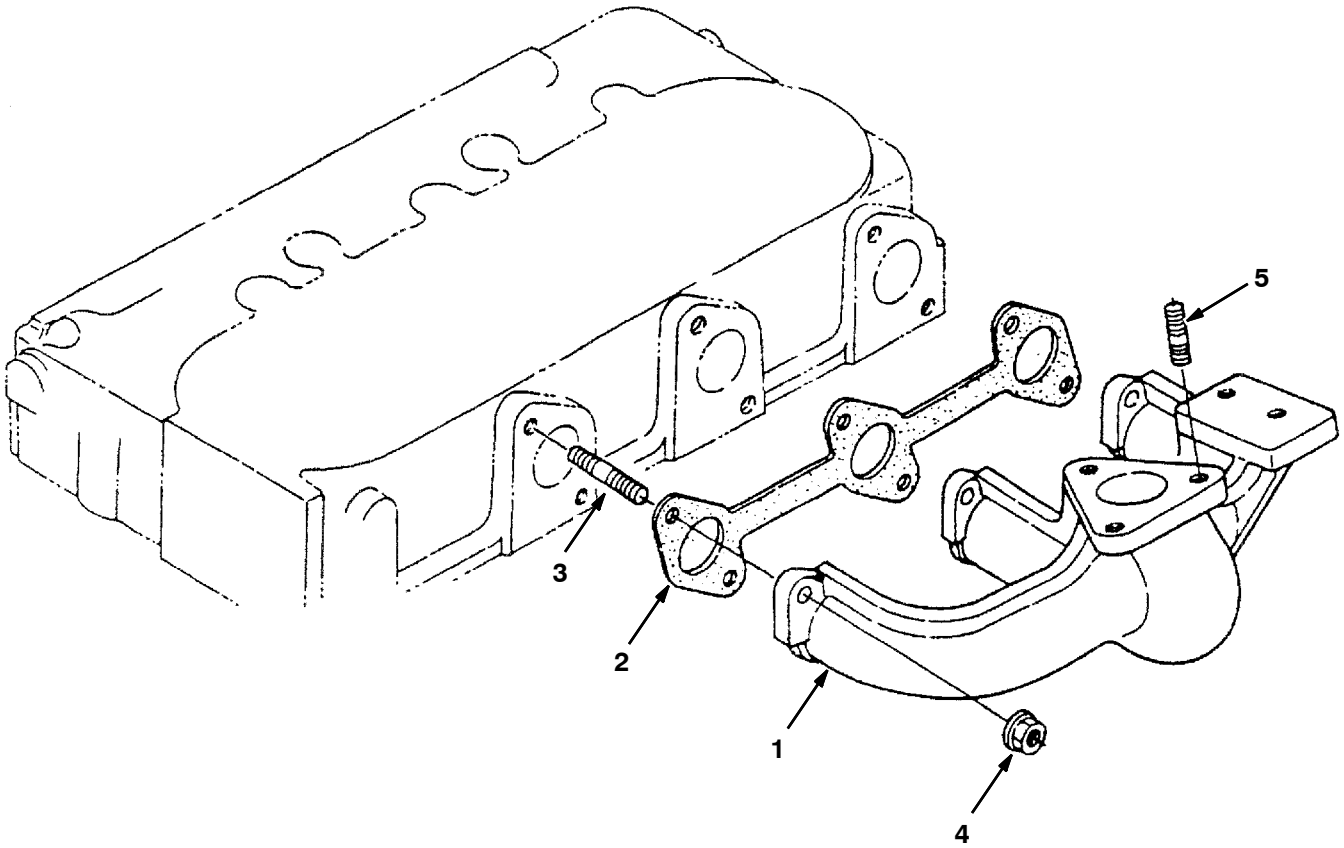

Ref.	Part No.	Description	Qty.
1	9004415	Manifold, Exhaust [Ku]	1
2	70935	Gasket, Manifold, Exhaust	1
3	73488	Stud [Ku]	6
4	73489	Nut	6
5	368291	Stud	3

Fig. 9 - Inlet Manifold Group

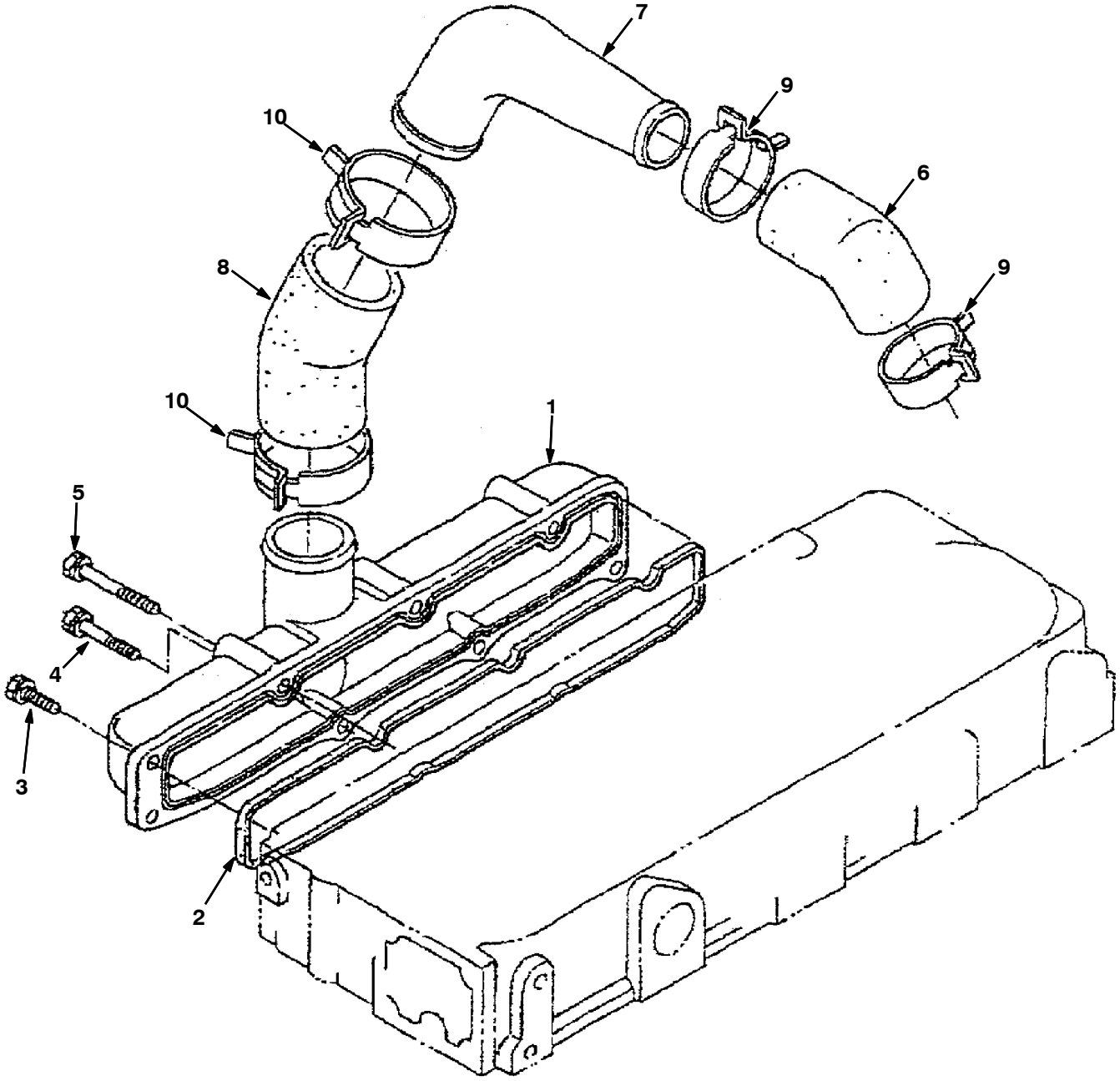

	Ref.	Part No.	Description	Qty.
▽	1	9004411	Manifold, Inlet Assy [Ku]	1
▲	2	70934	Gasket, Manifold, Intake [Ku]	1
	3	40409	Screw, Hex [Ku]	3
	4	72996	Screw, Hex [Ku]	1
	5	72994	Screw, Hex [Ku]	2
	6	9004412	Pipe, Inlet [Ku]	1
	7	9004413	Pipe, Inlet [Ku]	1
	8	9004414	Pipe, Inlet [Ku]	1
	9	368287	Clamp, Hose	2
	10	368286	Clamp, Hose	2

Fig. 10 - Valve, Rocker Arm Group

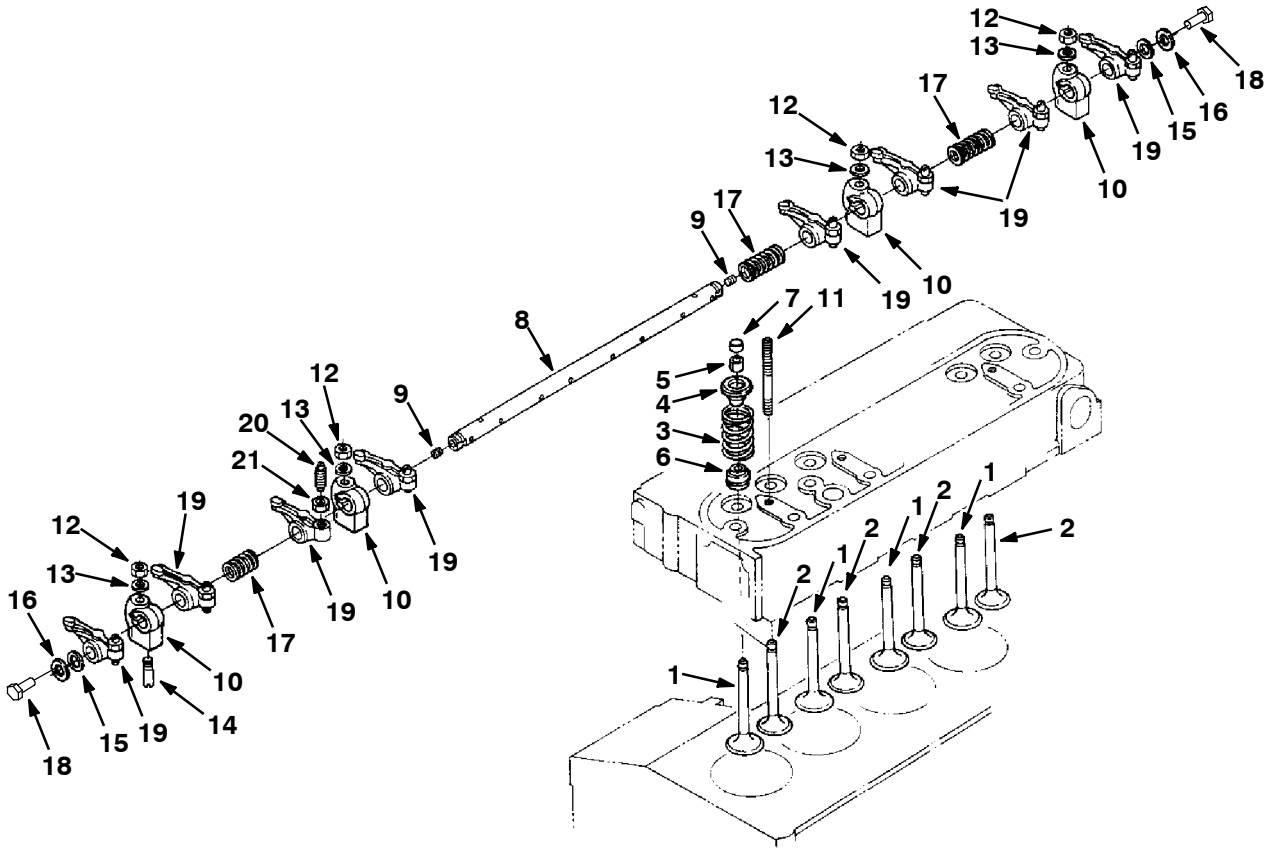

07423 - 7400, 6600L, 8200L, D

	Ref.	Part No.	Description	Qty.
	1	70936	Valve, Intake [Ku]	4
	2	70937	Valve, Exhaust [Ku]	4
	3	9004408	Spring, Valve [Ku]	8
	4	73492	Retainer, Spring, Valve [Ku]	8
	5	73493	Retainer, Spring [Ku]	8
	6	73494	Seal, Stem, Valve [Ku]	8
	7	361392	Cap, Valve [Ku]	8
▽	8	9004409	Shaft, Rocker, Arm [Ku]	1
▲	9	73496	Screw [Ku]	2
	10	73497	Bracket, Mtg, Rocker Arm [Ku]	4
	11	73498	Stud [Ku]	4
	12	73499	Nut, Hex [Ku]	4
	13	73500	Washer, Flat [Ku]	4
	14	9004410	Pin, Spring [Ku]	1
	15	73502	Washer, Shaft, Rocker [Ku]	2
	16	361589	Washer, Flat [Ku]	2
	17	73504	Spring, Cmpr, Rocker [Ku]	3
	18	393598	Bolt	2
▽	19	73506	Arm, Rocker [Ku]	8
▲	20	73507	Screw, Adj, Rocker Arm [Ku]	8
▲	21	73508	Nut, Hex [Ku]	8

Fig. 11 - Camshaft Group

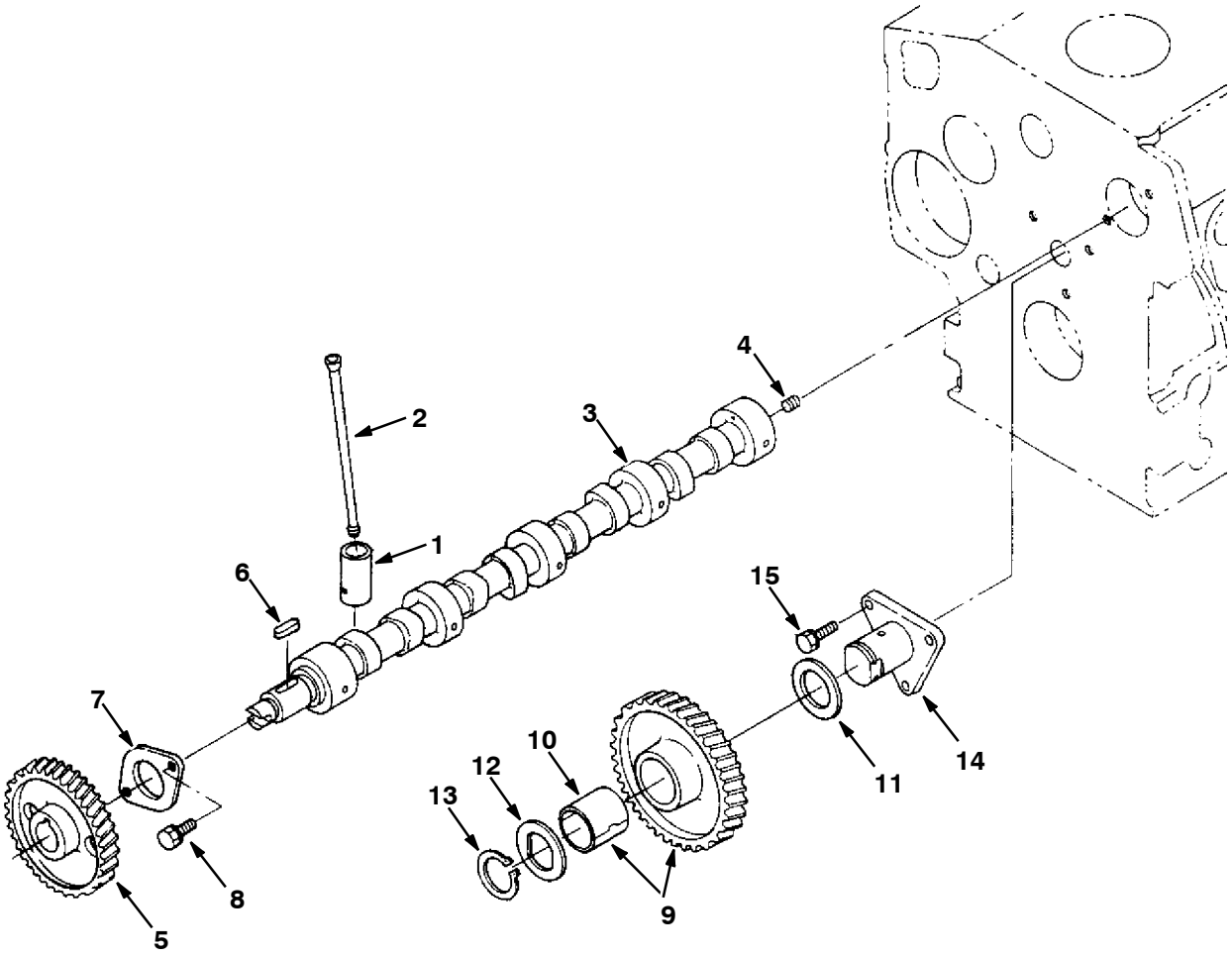

07425 - 7400, 6600L, 8200L, D

Fig. 11 - Camshaft Group

	Ref.	Part No.	Description	Qty.
	1	9004358	Tappet [Ku]	8
	2	73509	Rod, Push, Valve [Ku]	8
▽	3	9004359	Camshaft Assy [Ku]	1
▲	4	39197	Screw, Set [Ku]	1
▲	5	73511	Gear, Camshaft [Ku]	1
▲	6	73512	Key [Ku]	1
▲	7	73513	Stopper, Cam [Ku]	1
▲	8	41973	Bolt, Hex [Ku]	2
▽	9	73514	Gear, Idler, Cam [Ku]	1
▲	10	73515	Bushing, Gear, Idler [Ku]	1
	11	73516	Collar, Gear [Ku]	1
	12	73517	Washer, Collar, Gear [Ku]	1
	13	73518	Ring, Snap [Ku]	1
	14	73519	Shaft, Idler, Gear [Ku]	1
	15	41973	Bolt, Hex [Ku]	3

Fig. 12 - Piston and Crankshaft Group

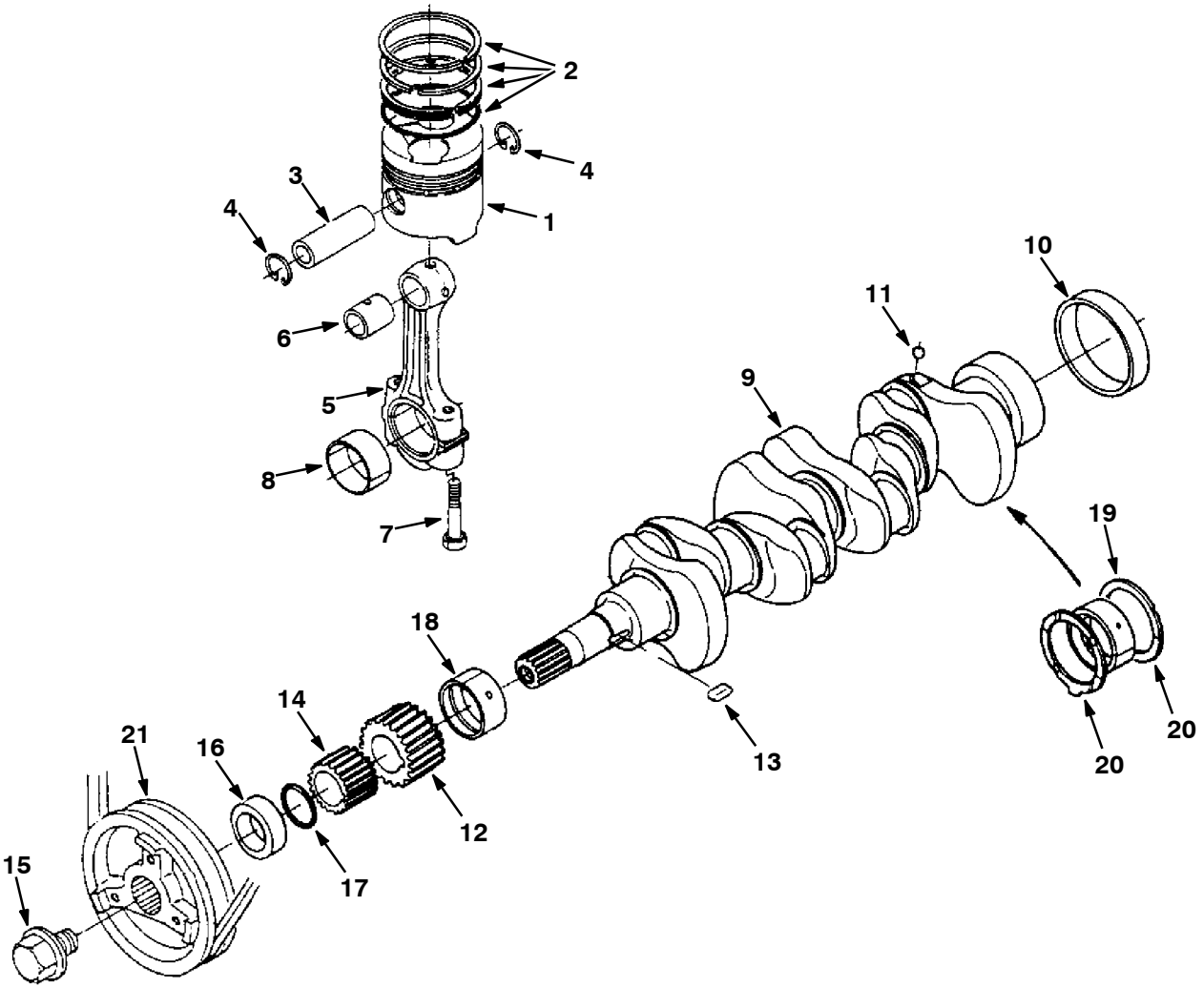

07427 - 7400, 6500L, D

Fig. 12 - Piston and Crankshaft Group

	Ref.	Part No.	Description	Qty.
	1	9004360	Piston [Ku]	4
	2	9004361	Ring, Piston Assy [Ku]	4
	3	73522	Pin, Piston [Ku]	4
	4	73523	Ring, Snap, Piston [Ku]	8
▽	5	73524	Rod Assy, Connecting [Ku]	4
▲	6	70940	Bushing, Pin, Piston [Ku]	4
▲	7	73525	Screw, Rod, Connecting [Ku]	8
▲	8	9004362	Crankpin, Metal [Ku]	4
▽	9	73526	Crankshaft	1
▲	10	70942	Bearing, Cshft [Ku]	1
▲	11	73527	Ball, Cshft [Ku]	4
▲	12	73528	Gear, Cshft [Ku]	1
▲	13	73529	Key [Ku]	1
▲	14	73530	Gear, Pump, Oil [Ku]	1
	15	73532	Screw, Hex, Cshft [Ku]	1
	16	70943	Collar, Crank, Front [Ku]	1
	17	9004363	Ring [Ku]	1
	18	9004364	Crankshaft, Metal [Ku]	1
	19	10844	Bearing, Thrust, Std [Ku]	2
	20	10845	Bearing, Thrust, Std [Ku]	2
	21	9004507	Pully, Fan [Ku]	1

Fig. 13 - Flywheel Group

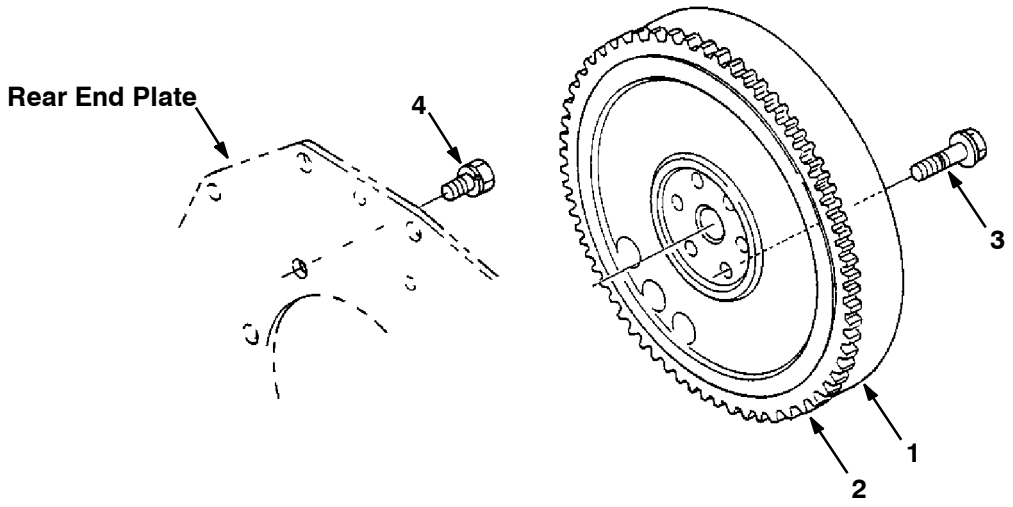

	Ref.	Part No.	Description	Qty.
▽	1	70956	Comp. Flywheel	1
▲	2	9004442	Gear, Ring [Ku]	1
	3	73533	Bolt, Flywheel	6
	4	73534	Bolt	8

Fig. 14 - Starter Breakdown, 74405

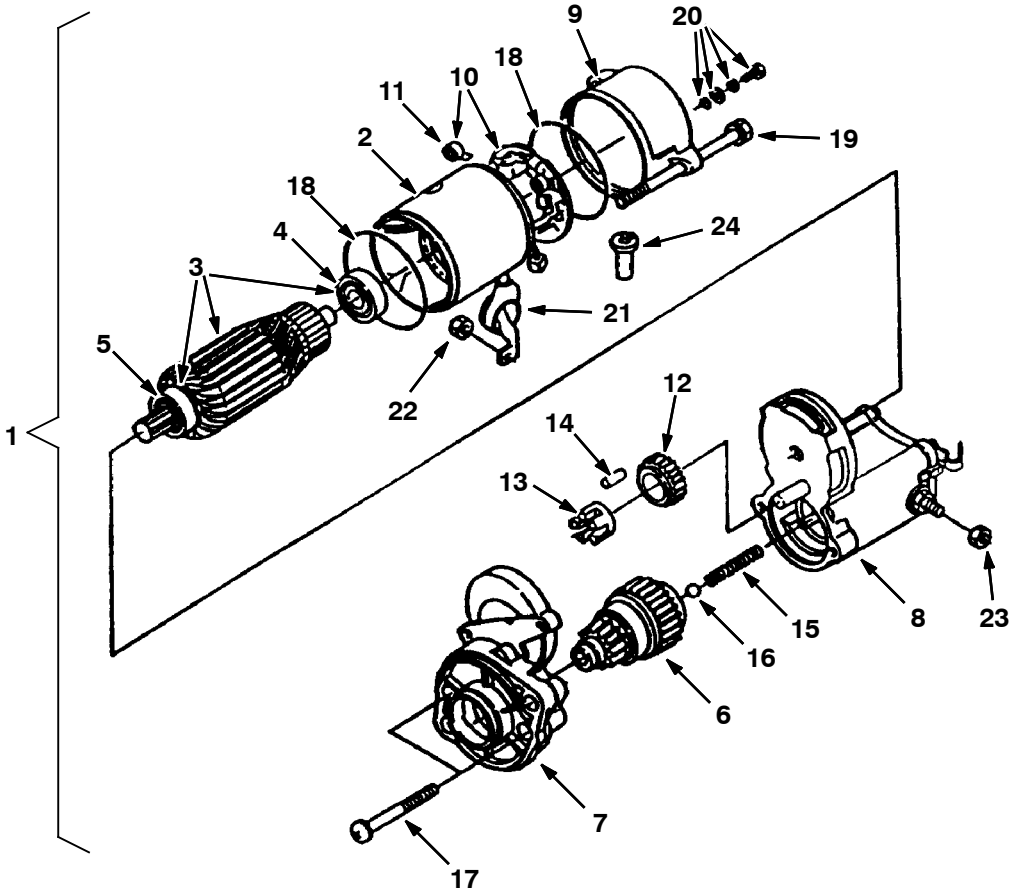

	Ref.	Part No.	Description	Qty.
▽	1	74405	Assy Starter	1
▲	2	70196	Assy Yoke	1
▲▽	3	70197	Assy Armature	1
▲▲	4	70198	Bearing	1
▲▲	5	70199	Bearing	1
▲	6	70200	Clutch, Over Running	1
▲	7	70201	Frame, Drive End	1
▲	8	70202	Assy Switch, Magneto	1
▲	9	70203	Frame, End	1
▲▽	10	70204	Assy Holder, Brush	1
▲▲	11	70205	Spring, Brush	4
▲	12	70206	Gear	1
▲	13	70207	Retainer	1
▲	14	73545	Roller	5
▲	15	70208	Spring	1
▲	16	73547	Ball	1
▲	17	70209	Bolt	2
▲	18	20433	O- Ring	2
▲	19	70210	Bolt	2
▲	20	20432	Assy Bolt	2
▲	21	70211	Cover	1
▲	22	73551	Nut, Hexagon	1
▲	23	70212	Nut, Hexagon	1
▲	24	70213	Pipe, Drain	1

Fig. 15 - Nozzle Holder and Glow Plug Group

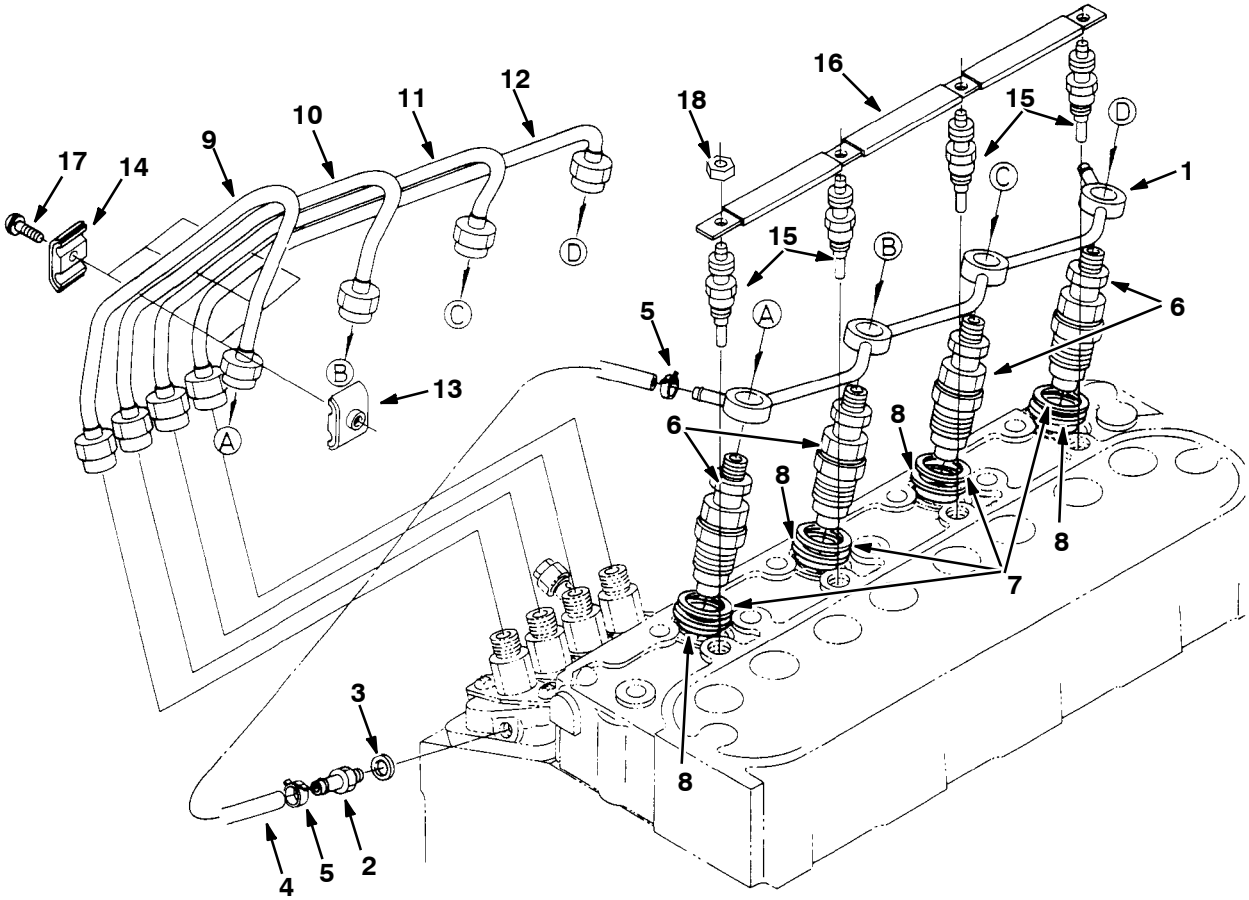

07433 - 7400, 8200L, D

Fig. 15 - Nozzle Holder and Glow Plug Group

	Ref.	Part No.	Description	Qty.
	1	73554	Pipe, Overflow	1
	2	73555	Fitting, Fuel [Ku]	1
	3	40166	Gasket, F/ Bolt [Ku]	1
▽	4	361373	Hose, Fuel [Ku]	1
▲	5	9004390	Pipe, Clip [Ku]	2
▽	6	372917	Housing Assy, Nozzle	4
▲	7	70964	Gasket, Nozzle, Injector [Ku]	1
▲	8	20719	Seal, Heat, Nozzle [Ku]	1
	9	9004391	Pipe, Injection [Ku]	1
	10	70966	Tube, Injector, Pipe #2 [Ku]	1
	11	70967	Tube, Injector, Pipe #32 [Ku]	1
	12	70968	Pipe, Injector, # 4	1
	13	30131	Clamp, Tube, Inj, Pipe #1 [Ku]	3
	14	30132	Clamp, Tube, Inj, Pipe #21 [Ku]	3
	15	9004392	Plug, Glow [Ku]	4
	16	73560	Cord, Ele, Glowplug	1
	17	393566	Screw, W / Washer	3
	18	9004393	Nut, Flange [Ku]	3

Fig. 16 - Injection Pump Group

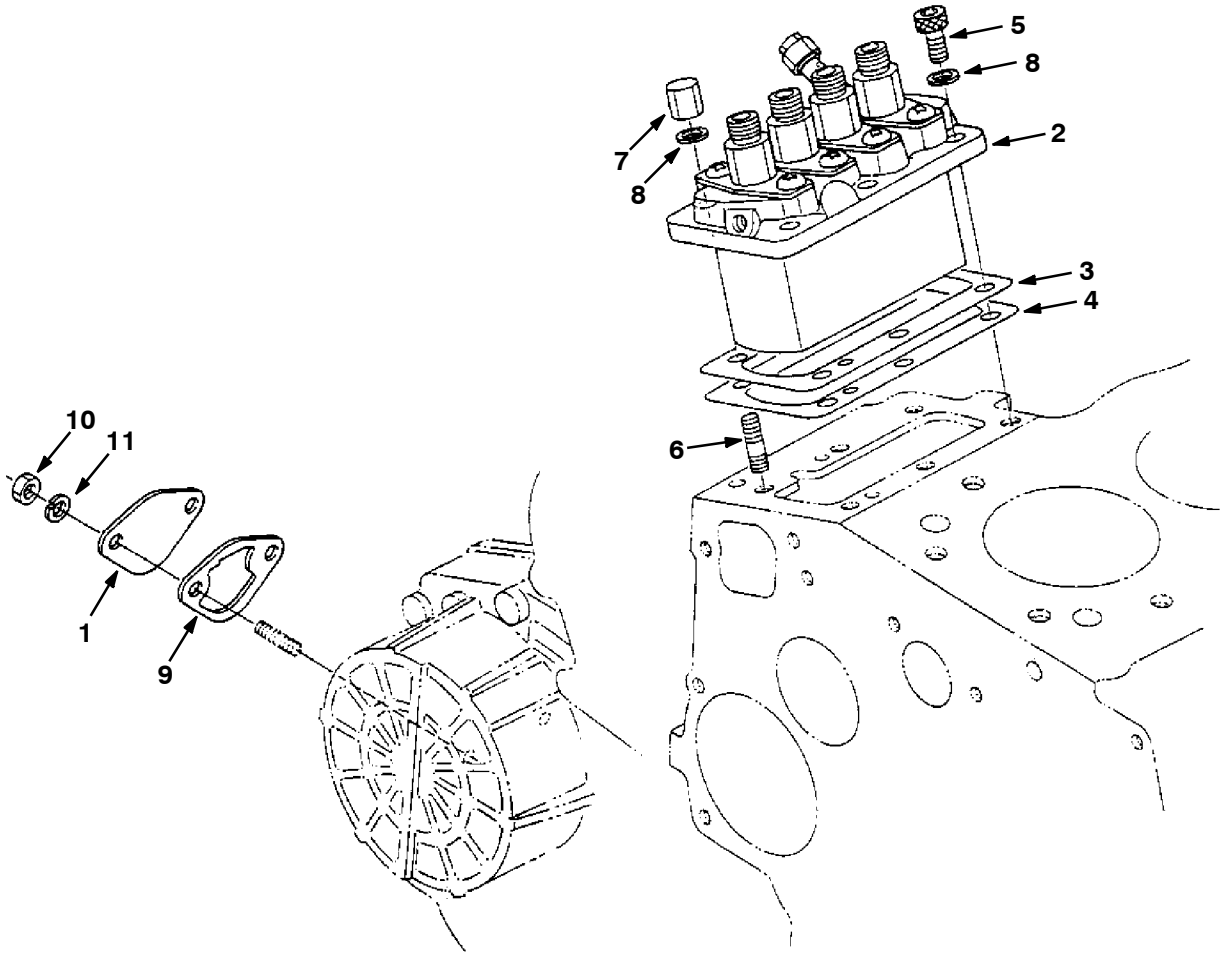

07437 - 7400, 6600L, 8200L, D

Fig. 16 - Injection Pump Group

Ref.	Part No.	Description	Qty.
1	73565	Fuel Pump Cover Plate	1
2	84635	Assembly Pump, Injection (See Injection Pump Breakdown)	1
3	70972	Shim, Injection Pump 0.20 mm	1
4	70973	Shim, Injection Pump 0.25 mm	2
4	84644	Shim, Injection Pump 0.30 mm	1
5	73561	Bolt	3
6	73562	Stud	3
7	73563	Nut, Cap	3
8	39065	Washer, Spring	6
9	70974	Gasket, Fuel Pump	1
10	39121	Nut	2
11	39065	Washer, Spring	2

Fig. 17 - Injection Pump Breakdown

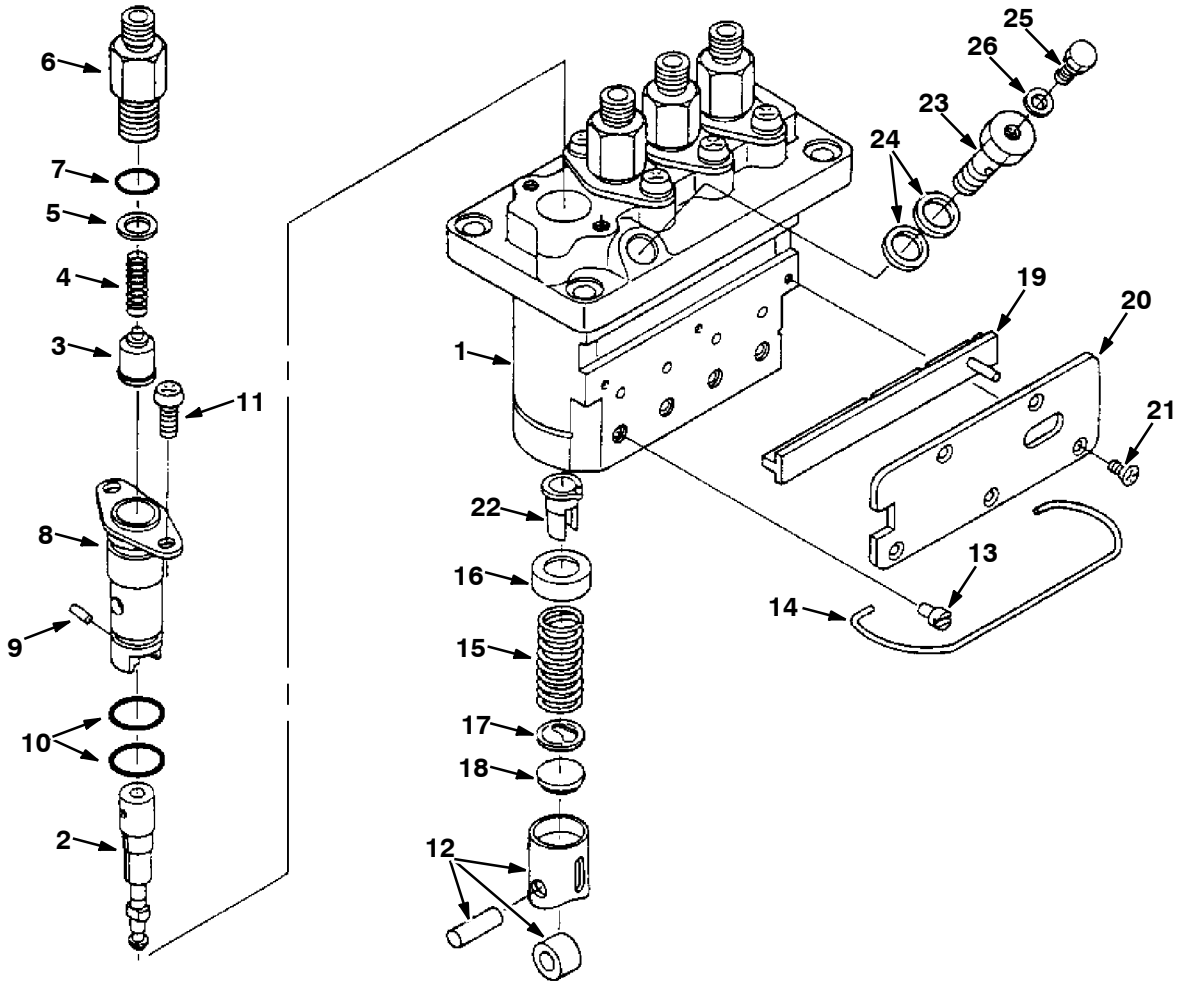

07439 - 7400, 6600L, 8200L, D

Fig. 17 - Injection Pump Breakdown

	Ref.	Part No.	Description	Qty.
▽	1	84635	Assembly Pump, Injection	1
▲	2	84648	Plunger, Pump	4
▲	3	73567	Valve, Delivery	4
▲	4	73568	Spring, Delivery Valve	4
▲	5	73569	Gasket, Delivery Valve	4
▲	6	73570	Holder, Delivery Valve	4
▲	7	73571	O- Ring	4
▲	8	73572	Flange, Sleeve	4
▲	9	73573	Pin, Joint	4
▲	10	73574	O- Ring	8
▲	11	73575	Screw	8
▲	12	73576	Assembly Tappet	4
▲	13	73577	Pin, Tappet Guide	4
▲	14	73578	Pin, Clamp	1
▲	15	73579	Spring, Plunger	4
▲	16	73580	Seat, Spring Upper	4
▲	17	73581	Seat, Spring Lower	4
▲	18	73582	Shim	1
▲	19	84649	Rack, Control	1
▲	20	84650	Plate	1
▲	21	73585	Screw	5
▲	22	73586	Sleeve, Control	4
▲	23	84651	Screw, Follow	1
▲	24	73588	Gasket	2
▲	25	73589	Screw	1
▲	26	73590	Gasket	1

Fig. 18 - Fuel Camshaft Group

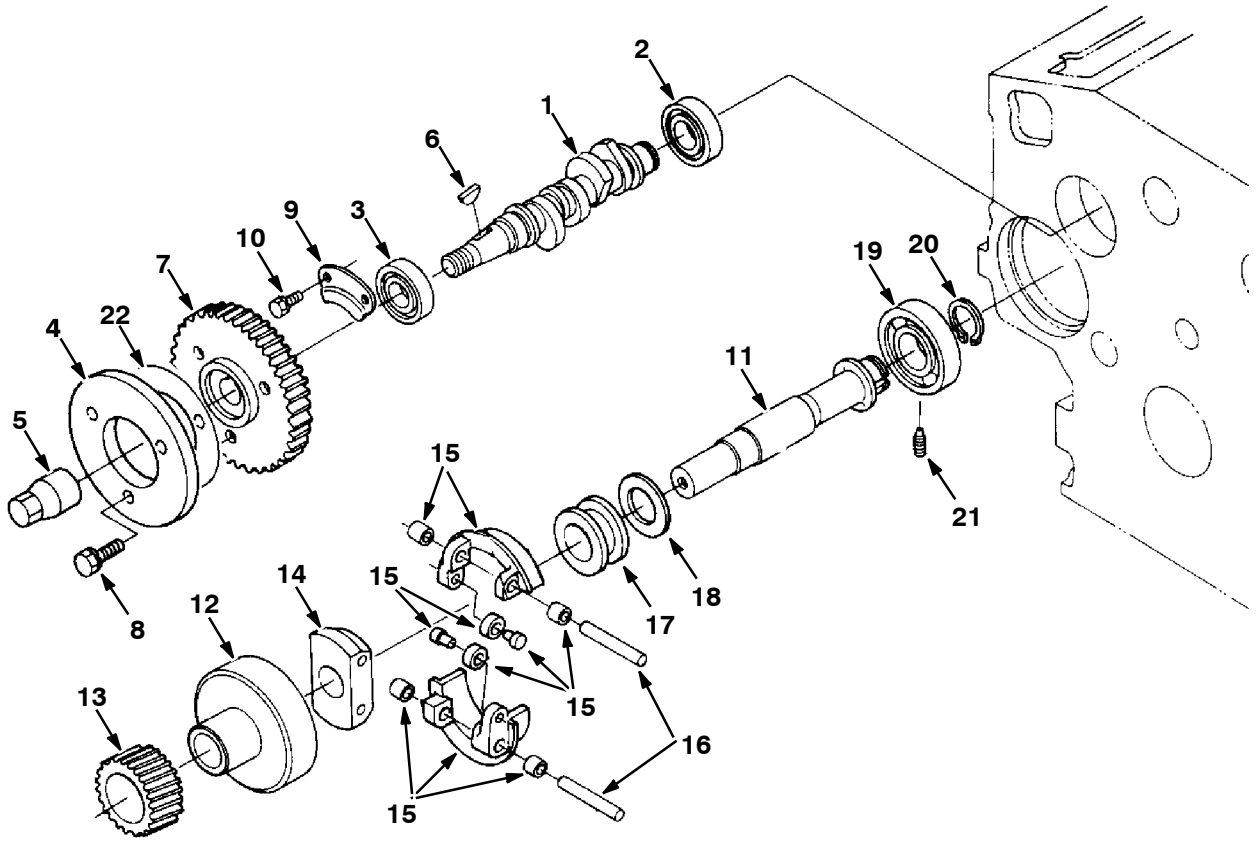

	Ref.	Part No.	Description	Qty.
	1	84636	Camshaft	1
	2	9004368	Bearing, Ball [Ku]	1
	3	9004369	Bearing, Ball [Ku]	1
	4	73592	Cam, Fuel [Ku]	1
	5	73593	Nut, Cap, Cam [Ku]	1
	6	73594	Key, Woodruff [Ku]	1
	7	73595	Gear, Pump, Fuel [Ku]	1
	8	40409	Screw, Hex [Ku]	3
	9	73596	Stopper, Fuel [Ku]	1
	10	41973	Bolt, Hex [Ku]	2
▽	11	73597	Shaft, Govnr	1
▲	12	73598	Holder, Gear [Ku]	1
▲	13	73599	Gear, Govnr [Ku]	1
▲	14	73600	Holder, Govnr [Ku]	1
▲	15	73601	Weight, Comp, Govnr [Ku]	2
▲	16	73602	Shaft, Govnr [Ku]	2
▲	17	70977	Sleeve, Govnr [Ku]	1
▲	18	70978	Washer, Thrust [Ku]	1
	19	9004373	Bearing, Ball [Ku]	1
	20	73603	Ring, Snap [Ku]	1
	21	73604	Screw, Set [Ku]	1
	22	9004370	Washer [Ku]	1

Fig. 19 - Idling Group

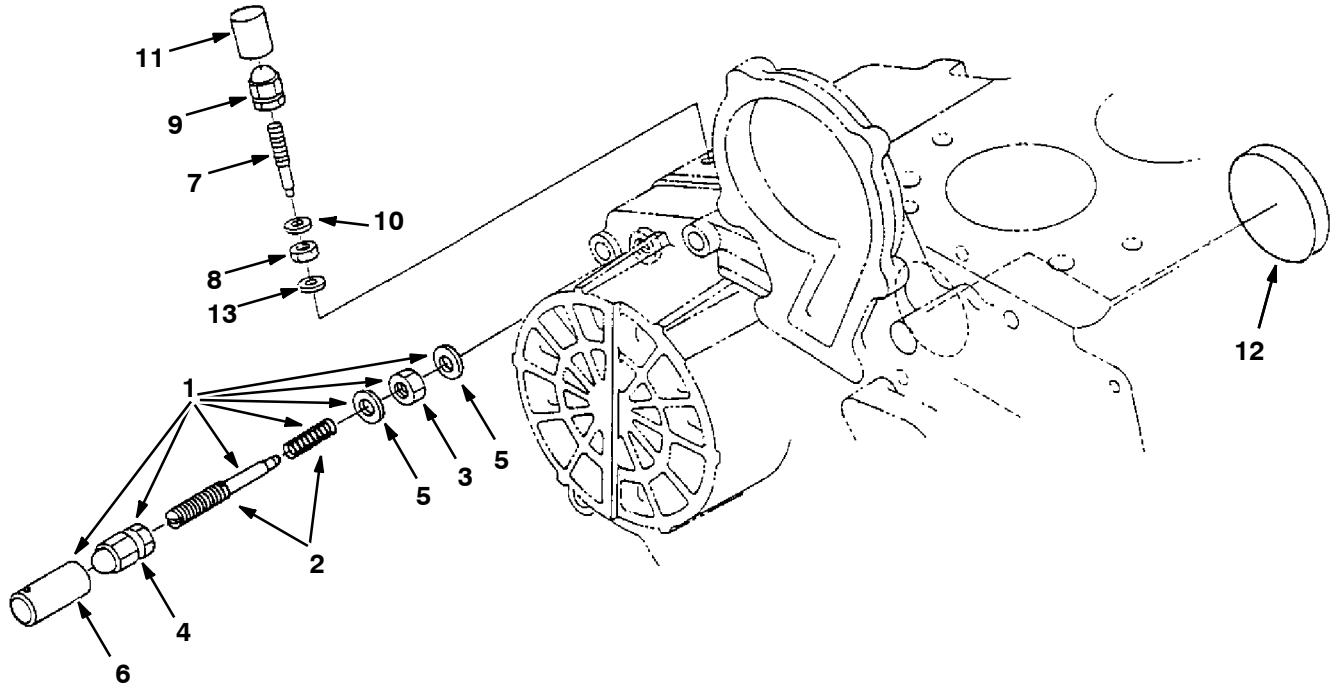

	Ref.	Part No.	Description	Qty.
▽	1	70980	Assembly Apparatus, Idle	1
▲	2	73605	Assembly Bolt, Adjusting	1
▲	3	73606	Nut	1
▲	4	361375	Nut, Cap	1
▲	5	40166	Gasket	2
▲	6	30136	Cap	1
	7	73610	Bolt, Adjusting	1
	8	9004374	Nut	1
	9	361375	Nut, Cap	1
	10	40166	Gasket	2
	11	30136	Cap	1
	12	70188	Cover	1
	13	9004375	Gasket [Ku]	1

Fig. 20 - Speed Control Plate Group

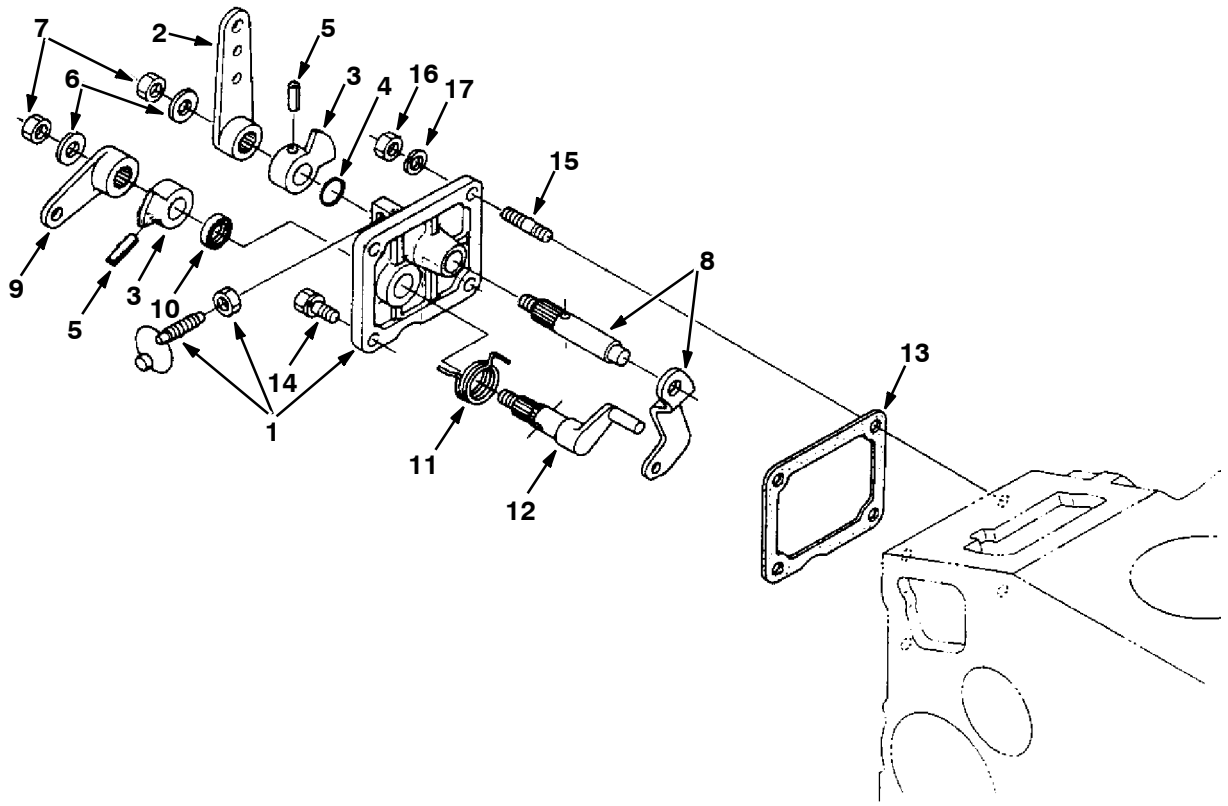

07445 - 7400, 6600L, 8200L, D

	Ref.	Part No.	Description	Qty.
▽	1	70982	Plate, Cntrl, Spd [Ku]	1
▲	2	73618	Lever, Cntrl, Spd [Ku]	1
▲	3	73619	Lever, Cntrl, Spd [Ku]	2
▲	4	9004385	O- Ring [Ku]	1
▲	5	40407	Pin, Spring [Ku]	2
▲	6	73621	Washer, Flat [Ku]	2
▲	7	73622	Nut, Hex [Ku]	2
▲	8	73623	Lever, Plate, Cntrl [Ku]	1
▲	9	73624	Lever, Stop [Ku]	1
▲	10	70983	Seal, Oil [Ku]	1
▲	11	73625	Spring, Tors [Ku]	1
▲	12	73626	Shaft, Lever, Spd [Ku]	1
	13	70984	Gasket, Cover, Spd [Ku]	1
	14	41973	Bolt, Hex [Ku]	2
	15	9004386	Stud [Ku]	2
	16	39121	Nut, Hex [Ku]	2
	17	39065	Washer, Lock, Split [Ku]	2

Fig. 21 - Governor Group

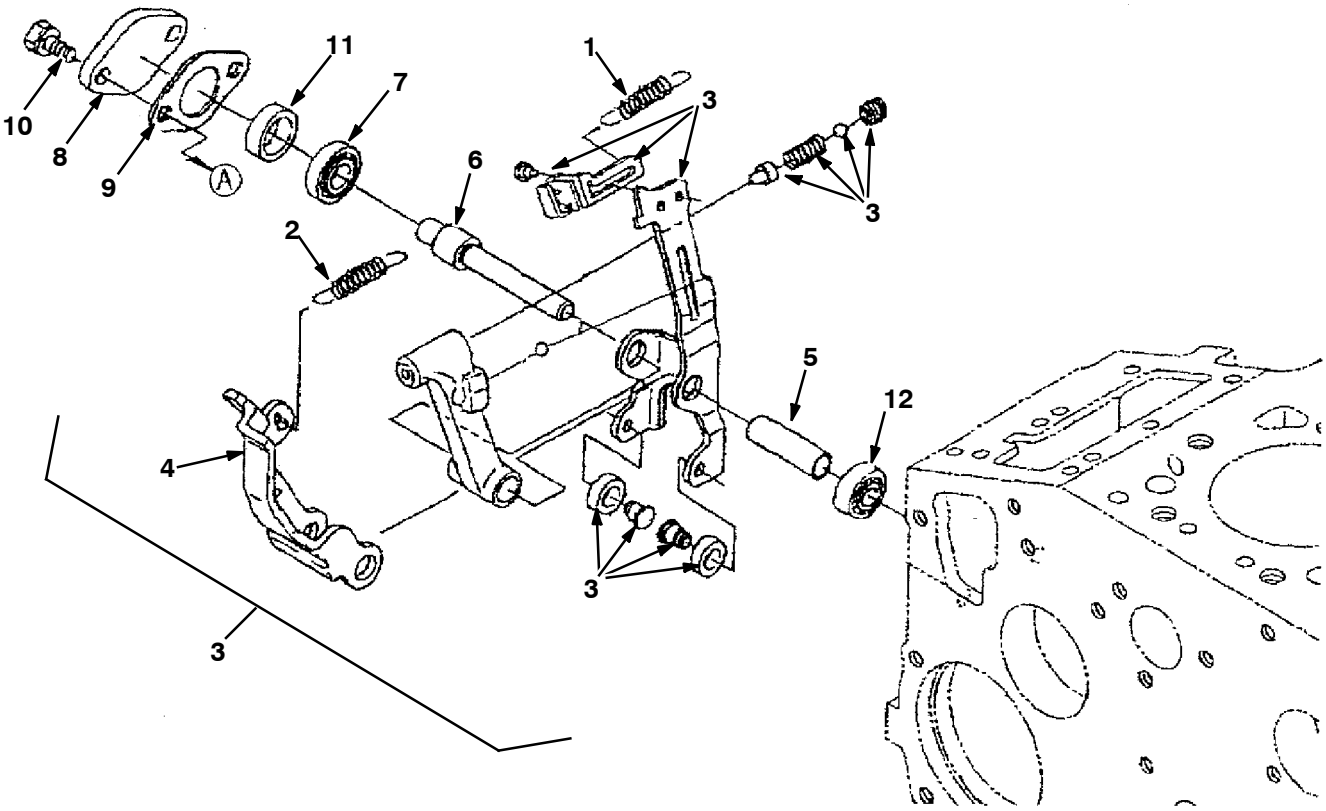

07447 - 7400, 6600L, 8200L, D

	Ref.	Part No.	Description	Qty.
	1	9004379	Spring, Start [Ku]	1
	2	70986	Spring, Ext, Govnr [Ku]	1
▽	3	9004380	Lever, Fork Assy [Ku]	1
▲	4	9004381	Lever, Fork [Ku]	1
▲	5	9004382	Lever, Fork, Shaft [Ku]	1
▲	6	9004383	Lever, Fork, Shaft [Ku]	1
▲	7	70989	Bearing, Ball [Ku]	1
▲	8	73631	Cover, Lever, Gov [Ku]	1
▲	9	361430	Gasket, Cover, Gov [Ku]	1
	10	39160	Bolt, Hex [Ku]	2
	11	70991	Collar, Govnr [Ku]	1
	12	70992	Bearing, Ball [Ku]	1

Fig. 22 - Water Flange Group

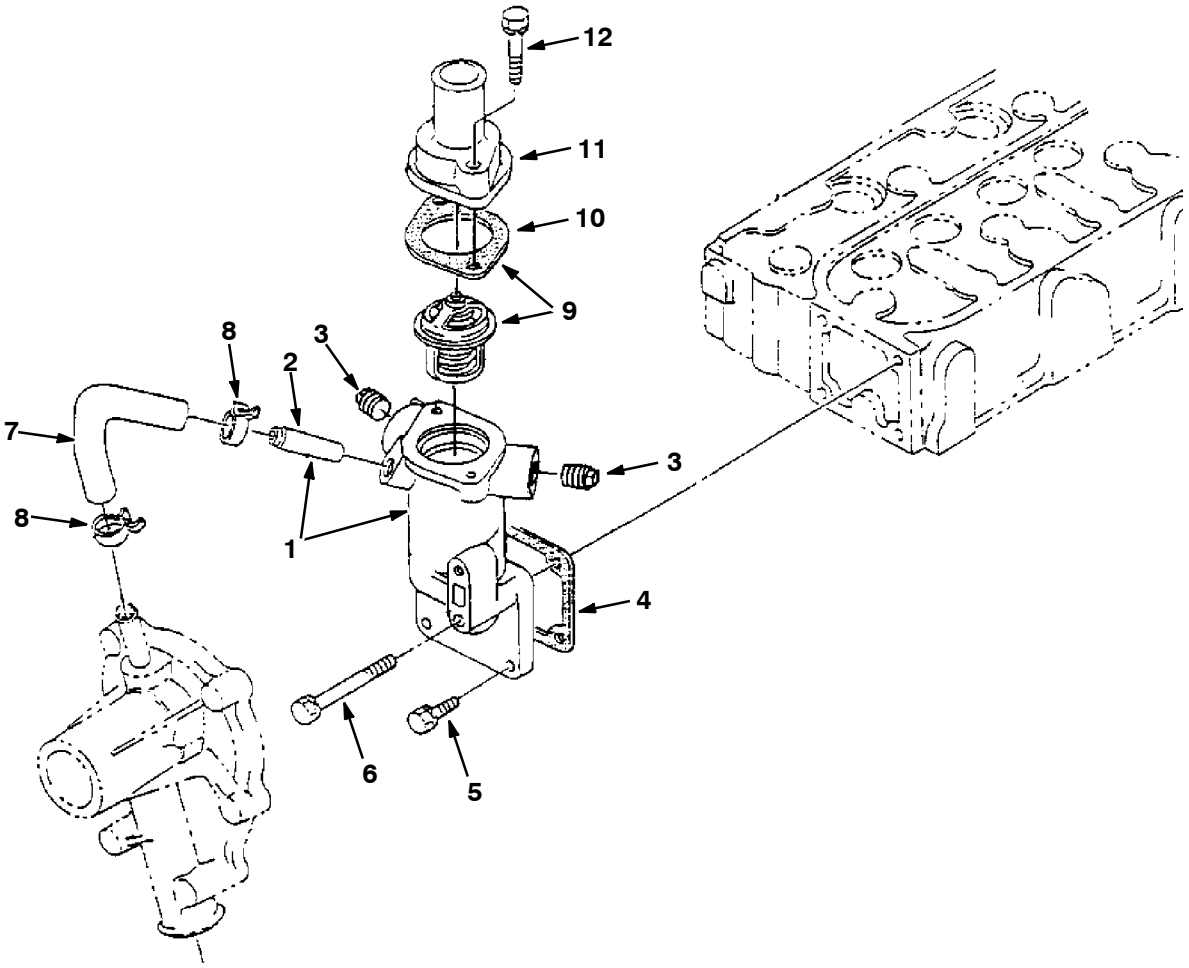

	Ref.	Part No.	Description	Qty.
▽	1	368090	Comp. Flange, Water	1
▲	2	384859	Pipe, Water Return 1	1
	3	73632	Plug	2
	4	70994	Gasket, Water Flange	1
	5	41973	Bolt	3
	6	72995	Bolt	1
	7	73633	Pipe, Water Return 2	1
	8	73634	Band, Pipe	2
	9	10852	Thermostat, 180deg, 1.7d	1
	10	10851	Gasket, Thermostat	1
	11	368091	Cover, Thermostat	1
	12	40418	Bolt	2

Fig. 23 - Turbo Charger Group

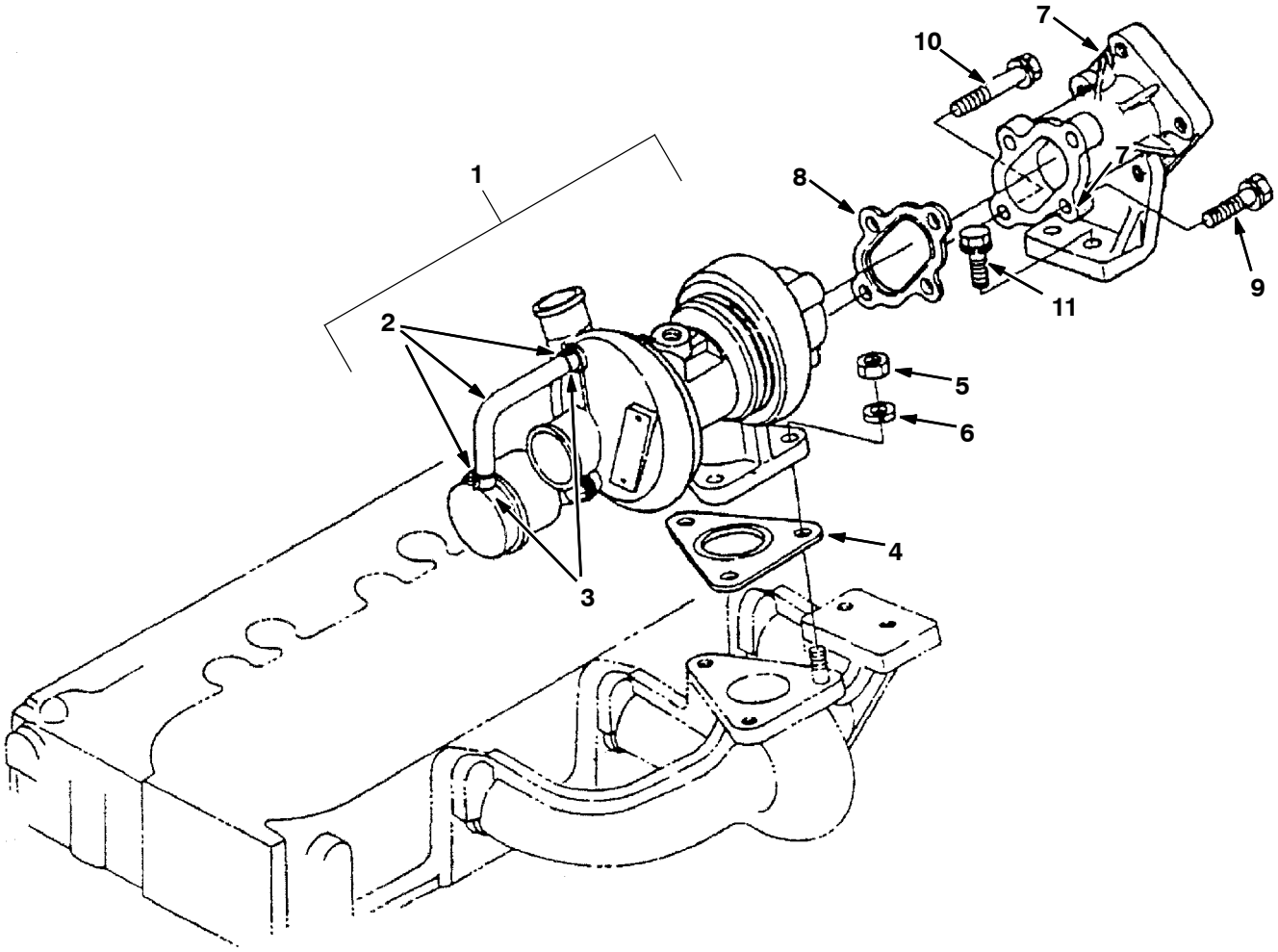

	Ref.	Part No.	Description	Qty.
▽	1	9004508	Turbo Assy, Charger [Ku]	1
▲▽	2	9004509	Hose, Turbo, Charger [Ku]	1
▲▲	3	9004510	Hose, Clamp [Ku]	2
	4	9004511	Gasket, Turbo [Ku]	1
	5	39096	Nut	3
	6	39097	Washer, Lock, Split [Ku,04512- 50080]	3
	7	368296	Flange, Muffler	1
	8	9004512	Gasket, Turbo [Ku]	1
	9	73535	Screw, Hex [Ku]	3
	10	368293	Bolt	1
	11	39138	Bolt	2

Fig. 24 - Oil Cooler Group

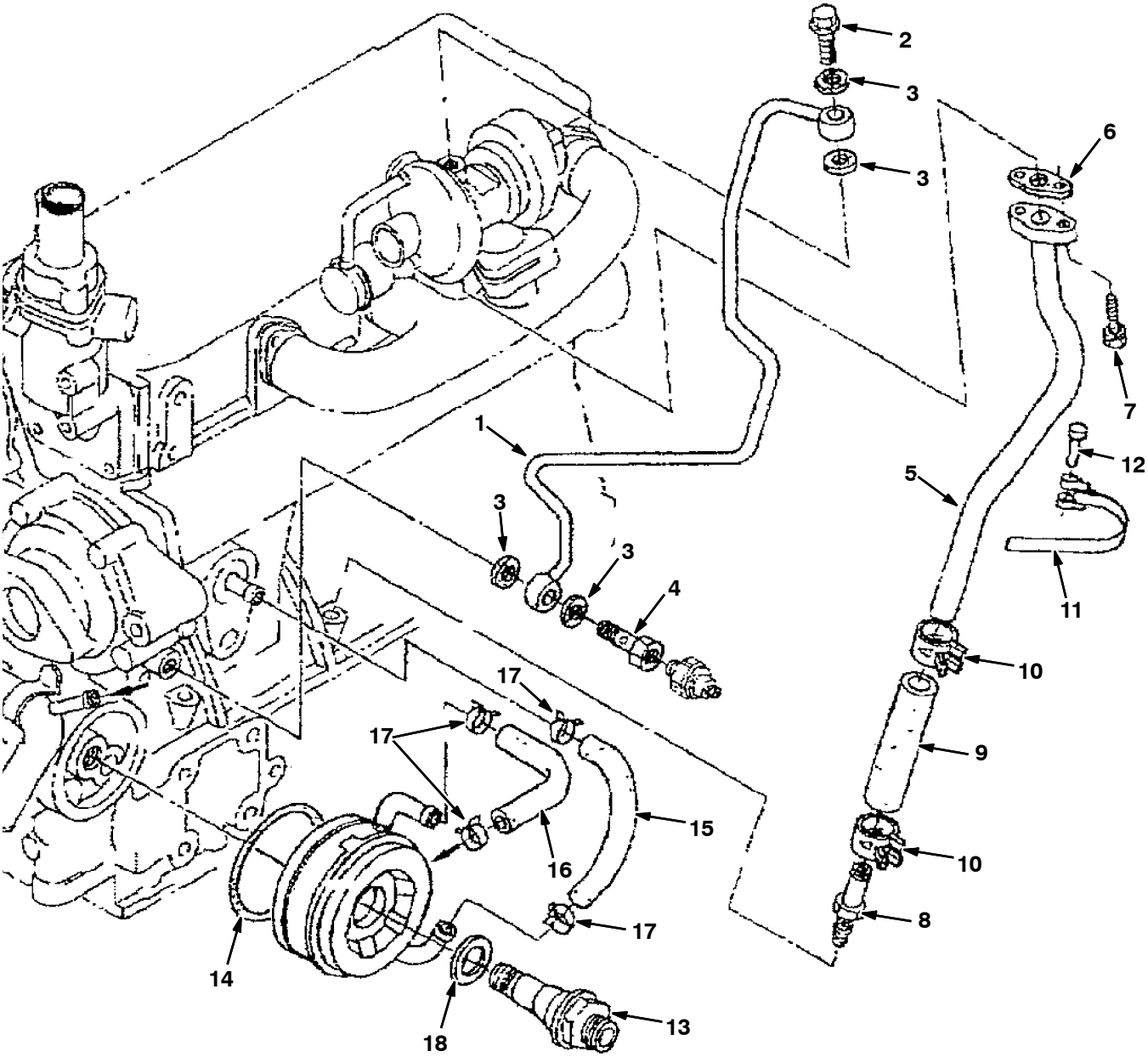

Fig. 24 - Oil Cooler Group

	Ref.	Part No.	Description	Qty.
	1	9004416	Pipe, Oil [Ku]	1
	2	368305	Bolt, Eye	1
	3	368300	Gasket	2
	4	368302	Bolt, Eye	1
	5	9004417	Pipe, Oil [Ku]	1
	6	368306	Gasket	1
	7	40409	Screw, Hex [Ku]	2
▽	8	9004418	Pipe, Oil [Ku]	1
▲	9	368301	Tube, Oil	1
	10	368298	Clamp, Hose	2
	11	368299	Clamp, Pipe	1
	12	368311	Pin, Clamp	1
	13	9004419	Connector [Ku]	1
	14	9004420	O- Ring [Ku]	1
	15	9004421	Pipe, Oil, Cooler [Ku]	1
	16	73633	Hose, Water [Ku]	1
	17	73634	Clamp, Hose, Heater [Ku]	4
	18	368304	Collar	1

SECTION 6

CONTENTS **PAGE**

PART NUMBER TO PAGE NUMBER CROSS REFERENCE LIST 6-2
PART DESCRIPTION TO PAGE NUMBER CROSS REFERENCE LIST 6-14

PART NUMBER TO PAGE NUMBER CROSS REFERENCE LIST

Part Number	Page Number
C460919	2-162
IB3614	4-22
00500-15	4-10, 4-11
00927	2-63, 2-65
00954	2-97
00960	2-31
00966	4-22
01316	3-3, 3-51
01493	2-9
01681	2-17
01683	2-51, 3-3, 3-19, 3-47, 3-51, 3-53, 3-63
01684	2-5, 2-57, 2-61, 2-69, 2-91, 2-93, 3-19, 3-27, 3-47, 3-61
01685	2-23, 2-33, 2-57, 2-61, 2-69, 2-71, 2-73, 2-75, 2-79, 2-83, 2-89, 2-95, 2-99, 3-7, 3-11, 3-55
01686	2-7, 2-71, 3-13, 3-55
01714	2-51
01754	2-57
01760	2-15
01762	2-63, 2-65, 3-7, 3-9
02430	4-23
02706	4-7
02850	2-15, 2-35, 2-53
02931	2-75
02938	2-59, 4-27
02942	2-53
03026	2-29
03192	3-45
03495	2-73
03922	2-97
04414	2-9, 2-23, 2-71, 2-73
04706	2-17
04733-12	2-67
05881	2-33
06548	2-49
06549	2-15, 2-43, 3-27, 3-47, 3-51
06922	2-57
06927	2-35
06928	2-15, 2-59
06933	2-15
06939	3-51
06942	2-19, 2-27, 2-35, 2-37, 2-49, 2-53
06943	2-27
06944	2-15
06946	2-31
06947	2-27
06948	3-57, 3-59
06955	2-49, 2-89, 2-95
06957	2-71
06960	2-17
06962	2-37
06963	2-57
06965	2-53, 3-63
06966	2-23
06969	2-47, 2-67
06972	2-23, 2-67
06988	2-19
07259	2-53, 2-61, 2-67, 2-75
07299	2-23, 2-37, 2-39
07449	2-75
07515	3-55
07782	2-19
07786	2-51, 2-79, 2-83
07788	2-79, 2-83, 2-99
07789	2-53
07790	2-33, 2-39
07791	2-9, 2-39, 2-77, 2-81, 2-119
07797	2-113
07805	3-27
08085	2-15
08170	2-49
08171	2-59
08175	2-63, 2-65
08179	2-49, 2-61, 2-67, 2-71, 3-7, 3-11
08180	2-45
08182	2-51, 2-79, 2-83
08202	2-47
08236	2-67
08708	2-15, 2-17, 2-19, 2-27, 2-29, 2-35, 2-37, 2-39, 2-49, 3-47, 3-57, 3-59
08709	2-25, 2-29, 2-31, 2-35, 2-41, 2-43, 2-49, 2-51, 2-79, 2-83, 2-119, 3-15
08711	2-23, 2-47
08712	2-13, 2-61, 2-71, 2-91, 2-93, 3-47
08713	2-33, 2-51, 2-55, 2-61, 2-63, 2-65, 2-67, 2-69, 2-71, 2-73, 2-75, 2-77, 2-81, 2-89, 2-93, 2-95, 2-99, 3-7, 3-15
08714	2-53, 2-55, 2-61, 2-71, 2-75
08716	2-33, 2-61, 2-79, 2-83, 2-91, 2-93
09005	2-63, 2-65
09007	2-79, 2-83
09010	2-23, 2-51, 2-55, 2-61, 2-63, 2-65, 2-69, 2-93, 2-99, 3-7, 3-11, 3-15, 3-55
09011	2-69, 2-71, 2-99
09023	2-71, 2-99
09028	2-79, 2-83
09081	2-77, 2-81
09164	2-7
09198	2-51
09200	2-15, 2-57, 2-91, 3-19, 3-61
09206	2-53, 3-27
09252	2-51, 2-53, 3-27
09291	2-57, 2-61
09738	3-13, 3-63
09739	2-91, 3-13, 3-37, 3-39, 3-41, 3-42, 3-43, 3-61
09740	2-9, 2-57, 2-63, 2-65, 2-67, 2-69, 2-79, 2-83, 2-85, 2-89, 2-95, 2-99, 2-123, 3-5, 3-27, 3-29, 3-37, 3-39, 3-41, 3-51
09741	2-67, 2-71
09744	2-57, 3-27, 3-61
09832	2-35, 2-37, 2-39
1002898	3-19
1002899	3-19
1005219	3-29
1005302	3-19, 3-29
1005435	3-19, 4-27
1006400	3-3, 3-5, 3-19
1006410	3-3
1006415	3-19, 3-29
1006416	2-27, 3-19
1007482	2-35, 2-41
1008916	2-19
1010614	3-33
1010668	3-19, 3-23, 3-33
1011403	3-29
1011412	3-19, 3-21, 3-23, 3-29, 3-33, 3-51
1011837	3-31
1011885	3-5
1013031	2-33
10143	2-43
1014563	2-35, 2-37, 2-39, 2-53, 2-57, 2-61, 2-75, 2-97, 2-101, 3-45
1014705	2-67
1014929	3-19
1014930	3-5
1014971	4-27
1014974	3-33, 4-27
1015026	3-33
1015032	2-91, 3-13, 3-21, 3-31
1015033	2-91, 3-5
1015041	2-35, 2-41
1015045	2-91, 3-3, 3-13, 3-21, 3-31
1015048	3-5
1015067	3-23
1015486	3-21, 3-31, 3-33, 3-51
1016314	2-31
1016354	4-27
1016827	2-27
1016837	3-3

Part Number	Page Number
1017022	3-19
1017101	2-86
1017126	1-1, 2-27
1017141	2-162
1017218	2-9, 2-15, 2-19, 2-21, 2-55, 2-61, 2-86, 2-89, 2-95, 2-99, 2-123, 3-5, 3-27, 3-29, 3-37, 3-39, 3-41, 3-51
1017248	3-39, 3-42
1017250	3-41, 3-43
1017368	2-5
1017386	3-29
1017413	3-29
1017415	3-29
1017903	2-45
1018098	3-19
1018155	4-27
1018207	2-57
1018208	2-59
1018209	2-101
1018216	2-101
1018226	2-53
1018227	2-53
1018239	2-55
1018240	2-53
1018253	2-61
1018266	2-53
1018272	2-55
1018289	2-121
1018293	2-59
1018495	3-51
1018499	3-51
1019031	2-79
1019225	2-7
1019228	2-15
1019250	3-51
1019251	2-7
1019285	3-55
1019295	1-1, 2-77, 2-81
1019424	2-89, 2-95
1019445	3-37, 3-39, 3-41
1019636	3-5
1019647	3-42, 3-43
1019950	2-157
1019971	3-37, 3-39, 3-41
1020168	2-9, 3-27
1020186	2-21
1020209	2-85
1020320	2-97
1020341	2-15, 2-21, 2-39, 2-86, 2-93, 2-97, 3-19
1020526	3-61
1020548	2-79
1020904	2-9
1020949	2-29
1021019	2-63, 2-65
1021047	2-59
1021090	2-93
1021210	3-5, 4-3
1021265	2-17
1021290	2-43
1021404	2-75
1021439	3-11
1021473	3-11
1021497	2-75
1021511	2-73
1021546	2-75
1021564	3-11
1021579	1-1, 2-121
1021609	2-71
1021617	3-11
1021794	3-7
1021834	2-9
1021881	3-51
1021920	2-93
1022003	2-69
1022105	2-15
1022106	3-13
1022111	3-7
1022135	3-7
1022137	2-89, 2-95
1022188	3-7
1022229	3-5
1022243	2-49
1022260	3-7
1022276	3-45
1022302	3-7
1022318	3-13
1022345	2-51
1022370	2-93
1022372	2-71
1022377	2-97
1022442	2-71
1022699	2-9
1022736	2-49
1022779	2-51
1022787	2-51
1022825	2-79, 2-83
1022846	2-77, 2-81
1022978	2-83
1023074	2-23
1023144	5-4
1023306	2-79
1023307	2-83
1023314	2-83
1023464	2-11
1023476	2-75
1023482	2-25
1023488	2-107
1023499	2-15
1023502	2-89, 2-95
1023545	2-121
1023569	2-11
1023606	2-109, 2-111
1023608	2-107
1023609	2-107
1023754	2-97, 2-99
1023769	2-113
1023779	2-71
1023853	2-35, 2-41
1023879	3-45
1023926	2-17
1024141	2-153
1024237	3-19
1024249	2-45
1024251	2-117, 4-7
1024260	2-17, 4-13
1024274	2-43
1024425	2-15
1024464	2-15
1024478	2-17
1024535	2-89, 2-95
1024558	2-89, 2-95
1024576	2-79, 2-83
1024584	2-77, 2-81
1024586	1-1, 2-77, 2-81
1024599	2-89, 2-95
1024641	2-71
1024648	2-7, 2-71
1024651	2-77, 2-81
1024695	2-17
1024703	2-71
1024764	2-113
1024853	2-97
1024977	3-63
1025005	1-1, 3-7
1025100	2-67
1025132	2-121
1025133	2-121
1025140	2-50
1025151	2-77, 2-81
1025229	2-25
1025480	2-89, 2-95
1025487	2-49
1025544	2-113
1025547	2-109, 2-111
1025601	2-75
1025619	2-93
1025620	2-93
1025680	2-71
1025736	2-15
1025756	2-101
1025841	2-101
1025872	2-97
1025887	2-97
1025888	2-97
1025904	2-53
1025990	3-17
1026007	2-71
1026014	2-93
1026051	2-89, 2-95
1026080	2-63, 2-65
1026119	3-15
1026352	2-63, 2-65
1026576	2-43
1026645	2-109, 2-111
1026727	2-89
1026743	3-51, 4-24
1026825	2-15

Part Number	Page Number
1027007	3-51
1027039	2-95
1027218	2-9
1027233	2-51
1027237	3-51
1027267	2-9
1027273	2-23
1027284	2-13
1027290	1-1, 2-85, 3-55
1027313	2-51
1027560	3-63
1027688	2-5
1027692	2-51
1027716	1-1, 3-7
1027742	2-51
1027798	3-39, 3-41, 3-42, 3-43
1027800	3-39, 3-41, 3-42, 3-43
1027810	2-67
1027916	2-7
1027922	2-27
1027926	3-11
1027976	3-51
1027978	3-51
1028145	2-111
1028173	2-93
1028211	2-93
1028328	2-93
1028522	2-93
1028635	2-79, 2-83
1028690	2-89, 2-95
1028691	2-89, 2-95
1028697	3-5
1028701	2-89, 2-95
1028769	2-13
1028772	2-13
1028823	2-119
1028972	2-81
1028979	2-81
1028994	2-33
1029055	3-51
1029057	3-27, 3-51
1029082	2-27
1029128	2-77
1029132	2-77
1029153	3-51
1029155	3-51
1029156	3-51
1029362	2-13
1029379	3-7, 3-9, 4-11
1029399	3-51
1029646	2-53
1029689	2-31
1029748	2-85
1029790	3-51
1029964	2-63, 2-65
1030017	2-9
1030404	2-107
1030441	4-30
1030444	4-30
1030585	2-9
1030593	2-9
1030617	2-85
1030709	2-115
1031011	1-1, 2-77, 2-81
1031017	2-162
1031206	2-15
1031309	2-95
1031557	2-19
1031566	2-31
1031572	2-93, 3-5
1031575	2-59
1031610	2-93
1031632	2-119
1031665	2-9, 2-13, 2-15, 2-17, 2-21
1031699	2-93, 4-3
1031796	4-24
1031797	4-24
1031798	4-24
1031799	4-24
1031800	4-24
1031801	4-24
1031802	4-24
1031803	4-24
1031823	1-1, 2-77, 2-81
1031826	2-7
1031827	2-7
1032174	2-7
1032399	2-51
1032418	2-162
1032424	2-27
1032450	2-162
1032512	2-27
1032812	2-25
1032830	3-45
1032831	3-45
1032896	3-61
1033230	2-15
1033246	2-3
1033248	2-67
1033258	2-67
1033265	2-69
1033267	2-69
1033269	1-1, 2-69
1033290	2-119
1033372	2-3
1033374	2-3
1033375	2-3
1033538	2-69
1033548	1-1, 2-69
1033549	1-1, 2-69
1033550	2-69
1033573	2-69
1033624	2-155
1033791	3-19
1033792	3-3
1033812	2-49
1033897	2-25
1033901	2-25
1033912	2-21
1033927	2-85
1033928	2-93
1033957	3-19
1033975	2-9
1034126	3-19
1034227	2-53
1034243	2-63
1034255	2-85
1034270	2-45
1034328	2-69
1034409	2-49
1034436	2-93
1034444	2-93
1034448	2-117, 4-9
1034454	2-49
1034686	2-61
1034694	2-61
1034700	2-61
1034701	2-61
1034762	2-9
1034764	2-11
1034765	2-11
1034766	2-11
1034767	2-15
1034768	2-11
1034769	2-11
1034806	2-45
1034812	2-75
1034844	2-19
1034862	2-73
1034869	2-93
1034878	2-121
1035039	2-93
1035044	2-93
1035052	1-1, 2-73
1035067	1-1, 2-73
1035143	2-73
1035145	2-73
1035260	2-101
1035341	2-31
1035703	2-101
1035727	2-75
1035794	3-19
1035796	2-25
1035902	2-23
1035976	2-35
1035997	2-9
1036155	2-29
1036220	2-15
1036227	2-21
1036240	2-59
1036249	2-21
1036271	2-53
1036345	2-15, 2-21
1036419	2-55
1036611	2-57
1036801	3-19
1036817	2-109
1036832	2-15
1036844	2-31

Part Number	Page Number
1036847	2-31
1036859	2-31
1036892	2-27, 2-29, 2-35, 2-37, 2-39
1036899	2-115
1036901	3-17
1036902	3-17, 3-57, 3-59
1036903	3-17
1036904	3-17
1036907	3-17
1036939	2-113
1036945	2-109, 2-111
1036946	3-17
1036955	2-115
1036956	2-115
1036959	2-119
1037011	3-15
1037032	4-27
1037072	3-59
1037085	2-93
1037235	2-57
1037262	3-19
1037288	2-29
1037336	2-123
1037340	2-21
1037346	2-7, 2-9, 2-21, 2-37, 2-39, 2-43, 2-49, 2-59, 2-85, 2-97, 2-101, 2-119, 3-55
1037354	2-25, 2-119, 2-121, 3-59
1037355	2-37, 2-39
1037495	2-85
1037634	3-55
1037671	2-57
1037717	2-19
1037805	3-15, 4-19
1037809	3-25
1037825	3-23, 3-33
1037827	2-53
1037843	2-61
1037933	2-49
1037947	2-57
1037971	2-19
1037993	2-101
1038115	2-61, 3-11
1038116	2-91
1038121	2-61
1038123	2-61
1038126	2-61
1038134	2-61
1038137	2-67, 2-71, 2-79, 2-83, 3-11
1038159	4-27
1038203	2-23
1038258	2-63, 2-65
1038358	2-159
1038430	2-3
1038566	2-123, 4-15
1038569	2-107
1038571	3-57, 3-59
1038680	1-1, 2-73
1038681	1-1, 2-73
1038855	3-55, 4-25
1038927	2-93
1038941	2-93
1039019	3-5
1039037	3-55
1039042	3-53
1039044	3-53
1039046	3-55
1039049	2-93
1039056	3-53
1039072	2-93
1039163	2-55
1039208	2-31
1039212	2-31
1039215	2-55
1039348	2-79, 2-83, 3-55
1039356	3-19
1039357	3-19
1039620	2-69
1039622	2-69
1039623	2-69
1039705	2-15
1039753	3-59
1039757	2-85
1040187	2-21
1040216	2-109, 2-111, 3-57
1040222	2-21
1040318	2-119, 2-121
1040339	2-123
1040465	2-85
1040467	2-13, 2-17, 2-39, 3-27, 3-47
1040512	3-57
1040575	2-27
1040628	2-113
1040629	2-113
1040630	3-57, 3-59
1040644	2-27
1040664	2-109
1040709	3-55
1040763	2-113
1040764	2-113
1040800	3-61
1040818	2-53
1040820	2-53
1040835	2-27
1040841	2-11
1040876	2-123
1040898	3-53
1040899	3-53
1041006	2-57
1041054	2-35, 2-41
1041351	3-55
1041389	3-17
1041391	2-113, 3-55
1041477	2-85
1041494	2-35, 2-41
1041822	2-13
1041920	2-57
1041935	3-53
1041952	3-55
1041953	2-89, 2-95
1042003	2-89
1042010	2-95
1042051	3-53
1042096	2-119
1042126	2-119
1042191	3-53, 3-55
1042499	2-5
1042500	2-5
1042504	2-5
1042579	3-55
1042640	3-65
1042686	2-67
1042710	4-30
1042772	3-53
1042859	3-55
1042968	3-9
1043166	2-119
1043214	2-89, 2-95
1043391	2-23
1043459	2-123
1043891	2-35
1043908	2-35, 2-37, 2-39
1043937	2-35
1044084	2-35
1044323	2-55
1044393	3-27
1044428	3-53, 3-55
1044429	3-55
1044898	2-35, 2-37
1044993	2-61
1045034	3-55
1045045	3-55
1045272	3-15
1045316	2-35
1045433	2-35, 2-37, 2-39
1045444	3-63
1045529	2-59
1045759	2-115
1045764	2-35, 2-37, 2-39
1045848	2-33
1045871	2-33
1045892	2-33
1045940	2-37, 2-39
1046090	2-19
1046173	3-27
1046245	2-19
1046247	2-37
1046261	2-37
1046282	2-37
1046314	2-35
1046427	2-57
1046492	2-37
1046798	2-93
1046801	2-37
1046810	2-23

Part Number	Page Number
1046962	2-37, 2-39
1046976	3-9
1046980	1-1, 3-9
1046995	3-9
1047002	3-9
1047060	3-9
1047132	2-15
1047191	2-21
1047192	2-21
1047238	1-1, 3-9
1047295	2-21
1048295AM	1-1, 2-57
1048955	2-15
1049242	2-57
1049254	3-19, 3-29
1049259	3-19
1049355	2-37, 2-39
1049882	2-37, 2-39
1050003	2-162
1050295	3-45
1050436	2-109, 2-111
1050437	2-109
1050757	2-23
1050913	2-37
1051052	2-15
1052017	3-29
1052124	2-67
1052336	3-29, 4-27
1052342	2-67
1052726	3-27
1052885	2-59
1053078	3-27
1053320	2-57
1053464	4-27
1053838	2-7, 2-59, 3-13
1054382	2-41
1054428	2-39
1054575	2-63, 2-65
1054610	2-65
1054682	2-63
1054776	4-27
1054857	2-63, 2-65
1055106	2-23
1055153	2-65
1056191	3-63
1056298	2-57
1057637	4-27
1057643	2-63, 2-65
1057707	1-1
1057708	1-1
1057710	1-1
1057711	1-1
1058699	2-39
1058730	2-39
1058732	2-39
1058935	3-29
1058963	3-27
1058988	2-152
1058996	2-17
1059091	1-1, 3-9
1059092	1-1, 3-9
1059100	2-99
1059234	4-30
1059343	2-45
1059344	2-47
1059372	3-29
1059391	3-29
1059488	2-27
1059542	2-57
1059544	2-47
1059545	2-47
1059641	2-3
1059677	3-27
1059878	4-30
1060130	2-7, 3-13
1060185	3-27
1060273	3-27
1060290	3-29
1060291	3-27
1060292	3-27
1060386	3-29
1060517	4-27
1060521	2-45
1060596	3-29
1060624	3-27
1060693	3-29
1060695	4-27
1060719	3-27
1060845	3-29
1060871	3-36
1060880	3-36
1060881	3-36
1060942	2-7
1061045	3-33
1061973	2-45
1062033	2-99
1062102	2-47
1062116	3-13
1062403	3-29
1062566	2-7, 2-59
1062804	3-27
1062813	2-162
10632-12	3-47
10632-13	2-59
10632-17	3-42, 3-43
10632-4	2-59, 3-27
10632-8	2-15
1064183	3-27
1064191	3-27
1064370	2-157
1064371	2-155
1064434	2-39
1064440	2-162
1064663	2-162
1065342	2-162
1065343	2-162
1066893	2-15
1067700	2-91
1068611	2-99
1068613	2-99
1068644	2-99
1068811	2-63, 2-65
1068812	3-9
1069019	1-1
1069020	1-1
1069241	3-45
1069253	3-45
1069385	2-75
1069562	2-67
1069580	3-47
1069662	3-47
1069755	3-47
1069761	3-47
1070324	3-47
1070402	3-47
1071061	2-45
1071173	2-119
1071195	2-41
1071240	2-101
1071253	2-99
1071280	3-29
1071502	2-23
1071852	3-59
1071895	2-152
1071947	3-36
1072456	2-15, 4-29
1072815	2-15
1072878	2-93
1072882	3-5
1072883	3-5
1072885	2-93
1072995	2-123, 4-17
1072997	3-15, 4-21
1073176	2-39
1073409	3-9
1073411	3-9
1073412	3-9
1073413	1-1, 3-9
1073414	1-1, 3-9
1073415	1-1, 3-9
1073416	1-1, 3-9
1073487	2-45
1074414	2-99
1074415	2-99
1074807	2-63, 2-65
1075003	2-13
10844	5-17
10845	5-17
10851	5-30
10852	5-30
10917	4-24
11399	2-35, 2-41, 3-5
11842	2-51
11984	2-29
1210807	2-7
1220185	2-5
1220235	2-5
1220236	2-5
1221543	2-5
12295	2-63, 2-65

Part Number	Page Number
12317	2-7, 2-61, 2-71, 3-13
12323	2-59, 3-27
13534	2-63, 2-65
13698	2-119
13904	4-15, 4-17, 4-19, 4-21
13907	4-7
140916	3-47
14242	2-47
14432	2-29
14838	2-5
14877	3-3, 3-5, 3-19, 3-29
150006	2-35, 2-41
150538	3-19
150540	3-19, 4-27
150709	3-19
150713	3-19
15331	2-19
15539	2-5
15648	2-89, 2-95
15675	2-63, 2-65, 2-89, 2-95, 3-55
15678	3-19
16213	2-51
16376	2-23
16411	1-1
16412	1-1
16431	2-109, 2-111
16695	4-10, 4-11
16735	2-23
16931	2-9, 2-15, 2-19, 2-21, 2-27, 2-29, 2-33, 2-35, 2-37, 2-41, 2-45
16953	2-31
16968	2-13
17284	2-89, 2-95
17414	2-25, 2-27
17461	2-61, 2-67, 2-79, 2-83, 3-11
17980	2-17, 2-119
19064	2-15, 2-35, 2-57, 3-49
19065	3-27
19066	2-15, 2-43, 2-53, 3-27, 3-37, 3-39, 3-41, 3-42, 3-43, 3-51
19191	3-7, 3-9
19252	2-23
19309	2-85
19313	3-45
19320	2-85
19583	2-45
20170	2-49
20171	2-23
20394	3-51, 3-53
20432	5-19
20433	5-19
20634	2-57
20719	5-21
20778	2-43
20833	1-1, 2-75
20944	3-5
20951	3-5, 4-27
20952	3-5
21196	3-63
21197	2-51
21198	2-51, 2-117
21601	2-73, 3-9
21602	2-73
21603	2-73, 3-9
21606	2-73
21657	4-23
21659	4-23
21726	2-33
21851	2-15
21933	4-13
21934	4-13
21935	4-13
21936	4-9
21937	4-9
21938	4-9
21939	4-9
21942	4-9
21946	4-9
21955	4-11
21956	4-11
21958	4-11
222158	3-3
222159	2-119
222267	2-15, 2-21
222268	2-55, 2-61
222290	2-43
222375	3-33
222463	2-77, 2-81
222496	2-33
222505	2-33, 2-75
222516	2-89, 2-95
22290	2-17
223080	2-15
223198	2-67, 3-27
223470	2-67, 3-7
223599	2-13
22615	3-9
22790	4-3
23146	2-7, 2-59, 3-13
23211	2-53
23285	4-3
23498	2-89, 2-95, 2-97, 2-101
23524-1	2-71
23788	2-49
24012	2-33
24105	3-3
24196	3-23, 3-33, 3-37, 3-39, 3-41, 3-42, 3-43
24199	3-47
24265	2-21, 3-3
24299	2-5
24339	2-45
24358	2-93, 4-3
24543	3-5
24544	3-3, 3-19, 3-29
24555	2-73, 2-75, 3-9
24698	3-29
24976	2-23
25046	3-7, 3-9
25122	2-121
25312	3-64
25611	3-7, 3-9
25686	2-63, 2-65
25735	2-75, 2-77, 2-81
28854	4-11
29557	3-11
29558	3-11
29584	2-71
30131	5-21
30132	5-21
30136	5-27
30407	2-37, 2-39
31241	2-101
31354	4-10, 4-11
31375	4-10
31379	4-10
31383	4-10
31543	3-23, 3-33
31613	1-1, 2-121
32126	2-45
32183	2-25, 2-59, 2-93, 3-5
32483	2-15, 2-17, 2-25, 2-31, 2-33, 2-35, 2-51, 2-53, 2-101, 3-27, 3-47, 3-57, 3-59
32485	2-23, 2-29, 2-31, 2-35, 2-37, 2-39, 2-51, 2-75, 2-101, 2-117
32486	2-17, 2-35, 2-47, 3-11, 3-63
32490	2-19, 2-27, 2-31, 2-35, 2-37, 2-39, 2-49, 2-51
32491	2-9, 2-15, 2-17, 2-19, 2-27, 2-29, 2-31, 2-33, 2-35, 2-37, 2-41, 2-45, 2-49, 2-51, 2-63, 2-65, 2-67, 2-69, 2-89, 2-93, 2-95, 2-119, 3-11, 3-15, 3-45, 3-61
32492	2-7, 2-15, 2-37, 2-39, 2-51, 3-7, 3-9, 3-45, 3-63
32493	2-23
32509	4-27
32731	3-55
32746	2-5
32969	2-47
32975	2-57
32981	2-25, 2-97, 2-101
32982	3-27
32983	2-15
32984	2-33
32987	2-45
32988	2-31
33295	3-3

Part Number	Page Number
33373	2-75
33401	2-69
33580	4-5
33612	2-31
33671	2-43
33812	2-123
33932	2-21, 2-51, 2-77, 2-81, 3-3, 3-27
34178	4-5
34323	2-101
34351	2-109, 2-111
34359	3-15
34390	2-123
34395	2-109, 2-111
34411	2-7, 2-59, 3-13
35493	4-22
35707	2-31
35904	2-119
360801	2-79, 2-83, 2-93
360824	2-57, 3-61
360973	2-86
361037	3-57
361047	3-17
361071	2-13
361073	2-13
361075	2-13
361339	2-7, 2-35, 2-51, 2-53, 2-69, 3-19
361366	5-4
361372	5-5
361373	5-21
361374	5-10
361375	5-27
361392	5-13
361401	5-7
361430	5-29
361436	5-3
361440	5-8
361589	5-13
363162	2-73
36328	2-79, 2-83, 2-99
363301	2-73
363458	2-7
363976	2-9
364441	2-73, 3-15
364587	2-53
364749	2-15
364779	2-27
364978	2-113
365007	3-59
365066	2-27
365095	2-91, 3-3
365164	2-91
365190	2-27
36643	2-51, 2-97, 2-101
36644	2-67
36658	2-57
36661	2-57
367313	2-61, 2-71
367770	2-71
367812	2-39
368055	5-7
368090	5-30
368091	5-30
368176	3-63
368286	5-12
368287	5-12
368291	5-11
368293	5-31
368296	5-31
368298	5-33
368299	5-33
368300	5-33
368301	5-33
368302	5-33
368304	5-33
368305	5-33
368306	5-33
368311	5-33
368317	5-8
368391	2-15
36845	3-11
369359	3-7, 3-9, 3-63
369704	2-43
369745	2-29
369746	1-1, 2-29
369747	2-29
370100	2-73
371017	5-9
372571	1-1
372906	5-5
372907	5-5
372917	5-21
373217	4-5
373226	4-5
373236	4-5
373260	4-5
373291	4-5
373297	4-5
373298	4-5
373299	4-5
373317	4-7
373327	4-7
373346	4-7
373347	4-7
373348	4-7
373389	4-7
373391	4-7
373393	4-7
373394	4-7
373395	4-7
373398	4-7
373402	4-7
373413	4-7
373427	4-7
373429	4-7
373434	4-7
373493	4-7
373494	4-7
373633	4-15, 4-17, 4-19, 4-21
373637	4-15, 4-17
373639	4-15, 4-17
373640	4-15, 4-17, 4-19, 4-21
373642	4-15, 4-17, 4-19, 4-21
373646	4-19, 4-21
373647	2-123, 4-15, 4-17, 4-19, 4-21
373648	4-15, 4-17, 4-19, 4-21
373656	4-15, 4-17, 4-19, 4-21
373657	4-15, 4-17, 4-19, 4-21
373658	4-15, 4-17, 4-19, 4-21
373660	4-15, 4-17
373661	4-19, 4-21
373662	4-19, 4-21
373663	4-15, 4-17, 4-19, 4-21
373664	4-15, 4-19
373665	4-15, 4-17
373666	4-15, 4-17
373667	4-15, 4-17
373668	4-15, 4-17
373670	4-15, 4-17, 4-19, 4-21
373671	4-15, 4-17
373672	4-15, 4-19
373673	4-15, 4-19
373678	4-7
373679	4-7
373680	4-7
373681	4-7
373683	4-19, 4-21
373684	4-15, 4-17
373688	4-15, 4-17
374224	2-162
374560	2-45
374563	2-45
375321	3-51
375322	3-3
37555	4-10, 4-11
37616	4-5
376735	2-39
377236	3-17
377334	3-55
377349	2-85, 3-55
377359	3-7
377537	1-1
377538	1-1
377540	1-1
37756	4-5
379609	2-45, 4-5
379656	2-27
379791	2-61
379870	2-79, 2-83
380521	2-23
381502	2-49
381858	3-57
381910	2-49
382099	2-67
382224	2-49
382320	2-85, 2-93, 3-64
382516	2-13
38255	4-5

Part Number	Page Number
383165	2-13
384418	2-21, 2-77, 2-81
384419	2-21
384859	5-30
384872	5-7
385644	3-21, 3-31, 3-33, 3-51
385685	2-85, 3-55
386088	2-51, 2-79, 2-83
386264	2-73
386298	2-73, 3-9
386652	3-5
386847	2-71
387237	2-73
387281	2-113
387433	2-73
387500	2-73
388153	2-17
38968	4-5
39051	5-3, 5-7
39062	5-3
39065	5-7, 5-23, 5-28
39073	5-4, 5-5
39087	5-3
39088	5-3, 5-5
39094	5-4
39096	5-31
39097	5-31
390994	2-85
39121	5-7, 5-23, 5-28
39138	5-31
39160	5-29
39197	5-15
39210	2-65, 2-123, 3-15
392171	2-13
392609	2-97
392611	2-31
39277	2-31, 2-35, 2-89, 2-95, 2-99
39278	2-51
39279	2-49
39281	2-75
39283	2-7, 2-9, 2-23, 2-31, 2-35, 2-37, 2-39
39284	2-23, 2-29, 3-63
39285	2-39, 2-101
39308	2-79, 2-83
39311	2-9
39312	2-57
393135	2-77, 2-81, 3-61
393215	2-45
393244	1-1, 2-31
393255	3-13
393401	2-23
39349	2-9, 2-15, 2-21, 2-51, 2-79, 2-83, 2-89, 2-95
39350	2-45
393504	5-5
393566	5-21
393570	5-3
393598	5-13
393982	2-21
39527	2-63, 2-65, 4-10
39534	2-97, 2-101
395973	3-15
395974	2-123, 3-15
396209	3-59
396221	2-107
396476	3-15
39811	2-67
398279	2-29
398500	3-51
398501	2-13
398508	2-13
39924	2-59
40166	5-21, 5-27
40362	2-121
40407	5-28
40409	5-12, 5-26, 5-33
40418	5-30
40607	2-59
40755	3-57, 3-59
41130	2-97
41141	2-69
41169	2-51
41178	2-35, 2-37, 2-39, 2-69, 2-101
41185	2-79, 2-83
41186	2-51, 2-89, 2-95
41187	2-53, 2-71, 2-79, 2-83
41305	2-53
41346	3-11
41359	3-27
41361	2-31
41399	2-51
41430	2-23, 2-35, 2-37, 2-39, 2-101, 3-45, 3-63
41445	2-79, 2-83
41579	4-27
41619	2-67, 2-71, 2-79, 2-83
41973	5-15, 5-26, 5-28, 5-30
42120	2-67
42120-1	2-53
42133A	3-3, 3-19, 3-29
42180	2-51
42215	2-101
42223	2-45
42226	2-97, 2-121, 2-123, 3-15
42227	3-57, 3-59
42467	2-51
43555	2-73, 2-89, 2-95
43844	2-35, 2-41, 3-3, 3-5, 3-19, 3-29
44868	2-63, 2-65, 2-101, 2-117, 3-15
44869	2-101, 2-117, 3-15
44961	4-27
45142	3-55
45622	4-5
45623	4-5
45628	4-10, 4-11
46236	3-39, 3-41
46481	2-119
46482	2-121, 2-123
46563	2-49
46785-1	2-71
46800	3-7
47504	3-15
47512	2-117
47513	2-99, 2-117
47522	2-45, 3-17
47566	2-27
47585	2-17
47638	3-57, 3-59
47719	3-13
47752	2-119
47801	2-45
48079	2-51
48126	2-25
48697	3-55
48790	3-29
48813	4-22
48985	2-67, 3-11
49266	2-13, 2-27, 2-35, 2-37, 2-39, 2-41, 2-45, 2-65, 3-29, 3-42, 3-43, 3-53
49697	2-77, 2-81
49800	2-15, 2-35
49933	2-97, 2-123
50178	3-13
50335	2-51
50544	2-91
50646	2-59
50901	3-29
50960	2-101
51109	2-49
51176	2-23
51305	2-35, 2-41
51332	2-33
51338	2-45, 2-47
51339	2-45, 2-47
51560-5	2-29
51824	2-67
52405	4-5
53029	2-27
53076	2-117
53466	2-7, 2-9, 2-43, 2-119, 3-55
53485	2-101, 4-22
53947	2-51
53953	2-51
54017	2-107
54051	2-45
54052	2-45
54087	2-45
54095	4-22
54205	2-51
54274	2-35, 2-37, 2-39, 2-97, 2-99, 2-101
54275A	2-97, 2-101

Part Number	Page Number
54333	2-25, 2-27, 2-43, 3-13, 3-19, 3-21, 3-23, 3-29, 3-31, 3-33, 3-51
54390	2-47
54577	2-47
54607	2-49
54615	2-93
54655	2-51
54861	2-97
54911-16	2-23
55272	3-39, 3-41, 3-42, 3-43
55455	2-121
55586	2-63, 2-65, 2-123, 3-15
55685	3-15, 3-57, 3-59
55837	2-23
55845	3-49
55847	2-31
55849	1-1, 2-23
55926	4-7
56078	2-63, 2-65
56185	2-17
56186	2-27, 2-155, 3-19, 3-27, 3-51, 3-53
56690	2-17, 2-121, 3-15, 3-17
56692	2-99
56820	2-17, 2-123
56821	3-7, 3-9
56835	2-17
56992	2-13
57189	2-97
57248	3-19
57315	2-45
57702	3-63
57804	2-43
57946	2-113
58311	2-49
58494	2-15
58566	2-23
58592	2-121
58819	2-7, 2-9, 2-50
58842	2-45
58979	2-93
59009	2-49
59015	2-27
59156	2-31, 3-11
59194	2-79
59195	2-83
59378	4-22
59542	2-53
59577	2-17, 2-123
59633	3-11
59649	2-101
59668	2-50
59735	2-101
59886	3-5
59967	2-101
60090	2-119, 3-15
60295	2-43
60711	2-23
607775	4-27
61490	4-10, 4-11
62471	2-119
630164	3-29
63175-1	3-11
63233	3-11
63234	2-51
63244-2	3-3
63430	3-49
63448	3-49
63451	3-49
63468	2-75
63810	2-23, 2-91, 3-3, 3-5, 3-13, 3-21, 3-23, 3-31, 3-33, 3-51, 3-55
63923	4-23
63987-1	3-29
64425	2-75, 2-77, 2-79, 2-81, 2-83, 3-7
64778	3-29, 3-51
65145-1	2-117
65180	2-75
65215	2-121
65230	4-11
65241	4-10
65441	2-51
65580	3-49, 3-53
65581	3-29
65695	2-63, 2-65
66211	2-47
66213	2-47
67004	3-49, 3-53
67555	2-67
67767	2-51
67811	2-117
68866	2-51
68869	2-43
69173	2-123
69234	2-23, 2-27, 2-29, 2-119
69582	2-49
69657	3-49
69659	3-49
69785	2-85, 3-3
70096	4-7
70100	4-7
70157	2-99
70158	2-47
70161	2-47
70165	2-23
70173	2-27
70188	5-27
70196	5-19
70197	5-19
70198	5-19
70199	5-19
70200	5-19
70201	5-19
70202	5-19
70203	5-19
70204	5-19
70205	5-19
70206	5-19
70207	5-19
70208	5-19
70209	5-19
70210	5-19
70211	5-19
70212	5-19
70213	5-19
70563	2-63, 2-65
70622	2-17
70623	2-17
70709	2-17
70717	2-17
70887	5-3
70888	5-3
70897	5-5
70898	5-5
70900	5-7
70901	5-7
70902	5-7
70903	5-7
70912	5-7
70913	5-10
70919	5-8
70920	5-8
70923	5-9
70925	5-9
70929	5-10
70930	5-10
70931	5-10
70932	5-10
70933	5-10
70934	5-12
70935	5-11
70936	5-13
70937	5-13
70940	5-17
70942	5-17
70943	5-17
70951	5-9
70956	5-18
70964	5-21
70966	5-21
70967	5-21
70968	5-21
70972	5-23
70973	5-23
70974	5-23
70977	5-26
70978	5-26
70980	5-27
70982	5-28
70983	5-28
70984	5-28
70986	5-29
70989	5-29
70991	5-29
70992	5-29

Part Number	Page Number
70994	5-30
70998	5-3
71204	2-71
71340	2-45
71341	2-45
71367	2-49
71369	2-67
71385	2-23
71388	2-23, 2-31
71556	2-109, 2-111
71579	2-69
71607	2-79, 2-83
71726	2-121
71727	2-123
71729	2-63, 2-65, 4-10
71741	2-109, 2-111, 3-57
71868	3-11
71869	3-11
71874	3-11
71941	2-19
71985	5-3
71986	5-3
71987	5-3
71988	5-3
71989	5-3
71990	5-3
71991	5-3
71992	5-3
71993	5-3
71996	5-5
71997	5-5
72014	5-7
72015	5-7
72016	5-7
72019	5-7
72897	2-53
72926	2-45
72968	3-29, 3-49, 3-53
72970	2-17
72993	5-7
72994	5-12
72995	5-30
72996	5-12
72998	5-9
72999	5-9
73027	2-17
73260	3-3, 4-23
73281	2-45
73342	4-3
73411	2-51
73433	3-3
73468	3-19, 3-29
73471	2-35, 2-41
73479	5-9
73480	5-10
73481	5-10
73482	5-10
73483	5-10
73484	5-10
73485	5-10
73488	5-11
73489	5-11
73492	5-13
73493	5-13
73494	5-13
73496	5-13
73497	5-13
73498	5-13
73499	5-13
73500	5-13
73502	5-13
73504	5-13
73506	5-13
73507	5-13
73508	5-13
73509	5-15
73511	5-15
73512	5-15
73513	5-15
73514	5-15
73515	5-15
73516	5-15
73517	5-15
73518	5-15
73519	5-15
73522	5-17
73523	5-17
73524	5-17
73525	5-17
73526	5-17
73527	5-17
73528	5-17
73529	5-17
73530	5-17
73532	5-17
73533	5-18
73534	5-18
73535	5-31
73545	5-19
73547	5-19
73551	5-19
73554	5-21
73555	5-21
73560	5-21
73561	5-23
73562	5-23
73563	5-23
73565	5-23
73567	5-25
73568	5-25
73569	5-25
73570	5-25
73571	5-25
73572	5-25
73573	5-25
73574	5-25
73575	5-25
73576	5-25
73577	5-25
73578	5-25
73579	5-25
73580	5-25
73581	5-25
73582	5-25
73585	5-25
73586	5-25
73588	5-25
73589	5-25
73590	5-25
73592	5-26
73593	5-26
73594	5-26
73595	5-26
73596	5-26
73597	5-26
73598	5-26
73599	5-26
73600	5-26
73601	5-26
73602	5-26
73603	5-26
73604	5-26
73605	5-27
73606	5-27
73610	5-27
73618	5-28
73619	5-28
73621	5-28
73622	5-28
73623	5-28
73624	5-28
73625	5-28
73626	5-28
73631	5-29
73632	5-30
73633	5-30, 5-33
73634	5-30, 5-33
73736	2-13
74090	2-89, 2-95
74094	4-10, 4-11
74095	4-10
74098	4-10, 4-15, 4-17
74099	4-10
74100	4-10, 4-11
74122	4-5
74123	4-5
74125	4-5
74165	4-5
74166	4-5
74167	4-5
74168	4-5
74180	4-7
74183	4-13
74185	4-13
74193	4-13
74196	4-13
74222	4-13
74225	4-7
74226	4-7
74232	4-13

Part Number	Page Number
74233	2-97, 4-22
74237	4-7
74243	4-13
74244	4-13
74245	4-13
74250	4-10, 4-11
74352	2-19
74405	2-23, 5-19
74440	2-51
74454	2-101
75456-3	2-97
75456-4	2-97
75968	2-17
76099	2-69, 3-3, 3-19
761490	2-7, 3-13
762514	2-43
763042	2-55
763090	2-67
763115	3-33, 3-42, 3-43
763116	2-57, 3-23, 3-29
763147	3-47
76315	2-99
76570	2-23, 2-31, 2-89, 2-95
76888	2-15
769785	3-51
77003	4-15, 4-17
77005	4-15, 4-17, 4-19, 4-21
77097	2-53, 2-61, 2-71, 2-79, 2-83, 2-123, 3-11
77098	2-67, 2-99, 2-101, 3-11
77221	2-162
77345	2-45
78043	2-27
78398	3-3, 4-3
78829	4-3
78830	4-3
78833	4-3
78836	4-3
78838	4-3
78839	4-3
78840	4-3
78841	4-3
78842	4-3
78843	4-3
78875	4-23
78950	4-24
78951	4-24
78952	4-24
79273-1	3-19, 3-29
79273-2	2-91, 3-3
79380	2-97
79381	2-35, 2-41
79484	3-3
79497	3-3
79506	2-89, 2-95
79729	4-5
79828	4-5
80395	2-73, 2-89, 2-95
80409	2-75
80950	2-75
81784	2-79, 2-83
81952	2-75
82727	2-9
82739	2-59
82832	2-45
82839	3-13
83874	1-1, 2-73
83879	2-51
84170	2-51
84635	5-23, 5-25
84636	5-26
84644	5-23
84648	5-25
84649	5-25
84650	5-25
84651	5-25
86508	3-3
86636	2-93
86751	2-49
86759	3-7
86866	2-67
87536	2-13
87631	2-63, 2-65
87738	2-27
87816	2-53, 2-79, 2-83
87866	1-1, 2-13
9000355	2-25
9000845	3-41, 3-43
9000846	3-39, 3-42
9000879	3-39, 3-41, 3-42, 3-43
9000990	2-123
9001314	3-45
9001316	3-64
9001321	3-37
9001327	3-39
9001331	3-41
9001717	3-43
9001718	3-42
9002382	2-9
9002383	2-9
9002398	2-121
9002410	2-9
9002435	2-13
9002683	2-101
9002684	2-97
9002708	4-3
9002709	4-3
9003009	4-30
9003313	2-93
9003424	2-9
9003427	2-9
9003430	2-9
9003437	2-9
9003438	2-9
9003439	2-9
9003453	2-13
9003455	2-97
9003461	2-97
9003793	2-89
9003794	2-95
9003869	5-8
9003870	5-8
9003888	5-4
9003889	5-4
9003890	5-4
9003934	2-25
9003939	2-25
9003947	3-65
9003948	3-65
9003950	3-65
9003951	3-65
9003952	3-65
9003958	2-25
9003987	2-7
9003988	2-7
9003989	2-7
9003990	2-35
9003991	2-33
9003992	2-85
9003994	2-85
9003995	2-85
9003996	2-85
9004029	3-63
9004031	3-51
9004071	3-49
9004272	4-25
9004288	4-25
9004289	4-25
9004290	4-25
9004291	4-25
9004292	4-25
9004335	5-3
9004336	5-3
9004337	5-3
9004338	5-4
9004339	5-4
9004340	5-5
9004341	5-5
9004342	5-7
9004343	5-7
9004344	5-7
9004345	5-7
9004346	5-7
9004347	5-7
9004348	5-4
9004349	5-9
9004350	5-9
9004351	5-9
9004352	5-9
9004353	5-9
9004354	5-9
9004356	5-9
9004358	5-15
9004359	5-15
9004360	5-17
9004361	5-17
9004362	5-17
9004363	5-17
9004364	5-17
9004368	5-26

Part Number	Page Number
9004369	5-26
9004370	5-26
9004373	5-26
9004374	5-27
9004375	5-27
9004379	5-29
9004380	5-29
9004381	5-29
9004382	5-29
9004383	5-29
9004385	5-28
9004386	5-28
9004390	5-21
9004391	5-21
9004392	5-21
9004393	5-21
9004402	5-8
9004403	5-8
9004404	5-8
9004405	5-8
9004406	5-8
9004407	5-8
9004408	5-13
9004409	5-13
9004410	5-13
9004411	5-12
9004412	5-12
9004413	5-12
9004414	5-12
9004415	5-11
9004416	5-33
9004417	5-33
9004418	5-33
9004419	5-33
9004420	5-33
9004421	5-33
9004422	3-65
9004442	5-18
9004473	4-9
9004475	4-15, 4-17
9004492	2-9
9004496	2-73
9004505	1-1
9004507	5-17
9004508	5-31
9004509	5-31
9004510	5-31
9004511	5-31
9004512	5-31
9004703	3-65
9004704	3-65
9004705	3-65
9004706	3-65
9004707	3-65
9004708	3-65
9004709	3-65
9004710	3-65
9004711	3-65
9004712	3-65
9004713	3-65
9004714	3-65
9004715	3-65
9004716	3-65
9004717	3-65
9004718	3-65
9004719	3-65
9004720	3-65
9004721	3-65
9004722	3-65
9004723	3-65
9004724	3-65
9004725	3-65
9004726	3-65
9004734	3-65
9004735	3-65
9004736	3-65
9004881	2-13
9004989	2-7
9004990	2-7
9004991	2-7
9004992	2-7
9005052	2-33
9005053	2-33
9005054	2-35
9005055	2-35
9006257	3-65
9006334	2-7, 2-59, 3-13
9006384	2-65
9006398	2-63, 2-65
9006814	2-37
9006815	2-37
9006816	2-37
9007131	3-37
9007142	2-117
9007143	2-117
9007513	2-7
9007882	3-27, 4-27
9007883	4-27
9007912	2-13
9007913	2-13
9008248	2-45
9008395	2-21
9008757	4-30
9008848	4-30
9008868	3-19, 4-30
9010085	3-47
9010086	3-47
9011343	4-17, 4-21
9011345	4-17, 4-21
9011346	4-17, 4-21
9011347	4-17, 4-21
9011429	3-65
9012585	4-29
9012587	4-29
9012589	4-29
9012590	4-29
9012591	4-29
9012592	4-29
9012593	4-29
9012594	4-29
9012595	4-29
9012832	2-63, 2-65
9014202	2-21
9014260	4-25
9014281	3-29
9014662	2-5
9014666	2-5
9014867	3-61
99321	1-1

PART DESCRIPTION TO PAGE NUMBER CROSS REFERENCE LIST

A

Ace, Thrust, Motor, Hyd [En], 4-11
Actuator, Govnr, Dsl, 2-23
Actuator, Valve, By-Pass [En], 4-7
Adapter, Actuator, Govnr, Eng, Dsl, 2-23
Adapter, Hsng, Flywheel [1505, Kubo], 2-23
Adapter, Rod-End, Side Brush, 3-11
Alarm Assy, Backup, 12/48Vdc, 3-37
Alarm Kit, Backup, Ci [M20/T20/M30], 3-37
Alarm, 9-48vdc, 95 Db(A) [Ec-H20], 3-27
Alarm, Warning [Sonalert, St628], 2-43
Alternator, 12vdc, 075a [Valeo], 2-31
Angle, Lh, 2-71
Angle, Mtg, Antenna, Telem, 3-47
Angle, Retainer, 2-55
Angle, Rh, 2-71
Angle, Sppt, Fan, 2-97, 2-99
Angle, Sppt, Tank, Rear, 2-85
Antenna, Telem, 110 In [Gprs], 3-47
Arm [Positioning], 2-51
Arm Wldt, Alternator, Dsl, 2-31
Arm Wldt, Lift, Sqge, Lh, 2-83
Arm Wldt, Safety, Sppt, Seat, .38d 06.5d, 2-15
Arm Wldt, Safety, Sppt, Seat, .38d 10.1l, 2-93
Arm Wldt, Sqge, Lift, Rh, 2-79
Arm, Cntrl, Pintle, Centering, 2-51
Arm, Link, 3-11
Arm, Pinch, 2-89, 2-95
Arm, Pintle, 2-51
Arm, Rocker [Ku], 5-13
Arm, Sqge, Side, Lh, 2-83
Arm, Sqge, Side, Rh, 2-79
Armrest, 4-29
Armrest, Rh, 2-15
Assembly Apparatus, Idle, 5-27
Assembly Bolt, Adjusting, 5-27
Assembly Pump, Injection, 5-25
Assembly Pump, Injection (See Injection Pump Breakdown), 5-23
Assembly Tappet, 5-25
Assy Armature, 5-19
Assy Bolt, 5-19
Assy Holder, Brush, 5-19
Assy Starter, 5-19
Assy Switch, Magneto, 5-19
Assy Yoke, 5-19

B

Bag, Power, 3-49, 3-53
Ball, 5-19
Ball, Cshft [Ku], 5-17
Ball, Relief, Oil [Ku], 5-7
Band, Pipe, 5-30
Bar Wldt, Retainer, Sqge, Rear, 2-73
Bar, Flat, Ss 0.06, 00.50 X 10.00l, 2sl, 2-13
Bar, Flat, Stl 0.19, 01.50 X 04.1l, 2-45
Bar, Flat, Stl 0.38, 01.00 X 03.3l, 2-27
Bar, Isolator, Vacfan, 2-101
Bar, Mtg, Hppr, 2-55
Bar, Mtg, Hppr Cover, 2-57
Bar, Retainer, 3-7
Bar, Rnd, Plstc, 0.31d 17.0l, 2-85
Battery, Wet, 12vdc 0600cca, 2-43
Bearing, 5-19
Bearing [Ku], 5-8
Bearing Kit [Cl], 4-13
Bearing, Ball [Ku], 5-26, 5-29
Bearing, Ball, 0.98b 2.05d 0.59w, 2-63, 2-65
Bearing, Case [Ku], 5-9
Bearing, Case, Main Assy [Ku], 5-9
Bearing, Cone, 1.38b 0.71w, 2-45, 2-47
Bearing, Cone, Pump, Hyd, 4-7
Bearing, Cshft [Ku], 5-17
Bearing, Cshft, Std [Ku], 5-9
Bearing, Cup, 4-7
Bearing, Cup, 2.56d 0.55w, 2-45, 2-47
Bearing, Flng, 2hole, 0.50b, 2-17
Bearing, Flng, 2hole, 0.50b [Nyl], 2-17
Bearing, Pillowblock, 1.02b [Solid Pye], 2-49
Bearing, Self Align, 0.75b 1.25d, 2-67
Bearing, Self Align, 1.25b 2.00d, 2-53
Bearing, Split, 1.00b, 2-49
Bearing, Thrust, 4-11
Bearing, Thrust, 0.53b 1.00d 0.03w, 3-11
Bearing, Thrust, Pump, Hyd, 4-7
Bearing, Thrust, Std [Ku], 5-17
Bellcrank, Lift, Sqge, 2-71
Bellows, Seat, 4-29
Belt, V, 42.0L [Hc41], 1-1, 2-31
Belt, V, 42.5l [3v], 1-1
Blade, Sqge, .38 3.50W 058.0L [Linard], 2-73
Blade, Sqge, .38 3.50W 058.7L, Ure (Option), 2-73
Blade, Sqge, .38 3.55w 038.3l, Linatex, 2-77, 2-81
Blade, Sqge, .38 3.55w 038.3l, Ure (Option), 2-77, 2-81
Blade, Sqge, .38 4.00W 063.0L, Linatex, 2-73
Blade, Sqge, .38 4.00W 063.2L, Ure (Option), 2-73
Blade, Sqge, Side Brush, Linatex, 1-1, 3-9
Blade, Sqge, Side Brush, Urethane, 1-1, 3-9
Block, Centering, 2-7, 2-71
Bolt, 5-5, 5-7, 5-9, 5-13, 5-18, 5-19, 5-23, 5-30, 5-31
Bolt [Ku], 5-3, 5-4, 5-8
Bolt, Adjusting, 5-27
Bolt, Carriage, M06 X 1.0 X 30, 2-61
Bolt, Carriage, M06 X 1.00 X 40, 4.6, 3-27
Bolt, Carriage, M10 X 1.50 X 70, 2-75
Bolt, Eye, 5-33
Bolt, Eye, .25-20 X 1.40 X .25 Eye, 2-51
Bolt, Eye, M08 X 1.25 X 070mm, 05.50 Eye, 2-79, 2-83
Bolt, Eye, M10 X 1.50 X 064mm, 07.10 Eye, 2-71
Bolt, Eye, M8X1.25, 2.75L, 2-51
Bolt, Flywheel, 5-18
Bolt, Hex [Ku], 5-15, 5-26, 5-28, 5-29
Bolt, M10x1.5, 4-9
Bolt, Motor, Hyd, 4-5
Bolt, Shld, .31d X 1.00, .25-20, 2-51
Bolt, Shld, 1.37d X 5.13l,1.1-18 Drilled, 2-45
Bolt, U, .25-20 X 2.00, 1.10id, 3-55
Boot, .63id .29l .90w, 2-13
Boot, 90deg .50id 1.00id 2.50l, Red, 2-31
Boot, Bellows, 3.1l 4.4w 2.8h 1hole, Neo, 2-17
Boot, Circuitbreaker, 3-27
Boot, Switch, Ignition, 2-13
Bracket Wldt, Brush Wrap Mtg, Rh, 2-67
Bracket Wldt, Brush Wrap, Lh, 2-67
Bracket Wldt, Cooler, Hyd Fluid, 2-119
Bracket Wldt, Flap, Recirculation, 2-69
Bracket Wldt, Guard, Sqge, 3-63
Bracket Wldt, Latch, 2-19
Bracket Wldt, Mtg, Alternator, Dsl, 2-31
Bracket Wldt, Mtg, Caster, 2-75
Bracket Wldt, Mtg, Eng, Front, Dsl, 2-23
Bracket Wldt, Mtg, Eng, Rear, Dsl, 2-23
Bracket Wldt, Mtg, Rh, 2-93
Bracket Wldt, Mtg, Side Brush, 3-7
Bracket Wldt, Mtg, Side Brush Fixed, 3-9
Bracket Wldt, Mtg, Sqge, 2-75
Bracket Wldt, Mtg, Tank, 2-9
Bracket Wldt, Pivot, Hppr Door, Lh, 2-61
Bracket Wldt, Pivot, Hppr, Rh, 2-61
Bracket Wldt, Propel, Pintle, 2-51
Bracket Wldt, Steering, Tilt, 2-17
Bracket Wldt, Tilt, Rh, 2-17
Bracket, Cntrl, Dsl [M30], 2-27
Bracket, Cover, 2-35, 2-37, 2-39, 2-61
Bracket, Cover, Hopper, 2-61
Bracket, Keeper, Latch, 2-85
Bracket, Latch, Cover, 2-21, 3-61
Bracket, Latch, Cover, Hppr, 2-57
Bracket, Latch, Keeper, 2-21
Bracket, Latch, Shrd, Seat, 2-15
Bracket, Lip, Hppr, 2-61
Bracket, Mtg, 2-9, 3-57, 3-59
Bracket, Mtg [FaST], 3-19
Bracket, Mtg, Air Fltr, Dsl [M30], 2-29
Bracket, Mtg, Cable, 2-49
Bracket, Mtg, Coolant, Tank, Dsl [2010], 2-27
Bracket, Mtg, Cover, Recvy Tank, 2-93
Bracket, Mtg, Cyl, 2-79, 2-83
Bracket, Mtg, Ecu [M20/T20 2007], 2-27
Bracket, Mtg, Fan, Shrd, Lower, Dsl, 2-39
Bracket, Mtg, Fan, Shrd, Upper, Dsl, 2-39
Bracket, Mtg, Govnr Control, Dsl, 2-27

Bracket, Mtg, Hinge, Lh, 2-21
Bracket, Mtg, Hinge, Rh, 2-15
Bracket, Mtg, Latch, Dsl, 2-35
Bracket, Mtg, Lh, Tank, Recvy, 2-93
Bracket, Mtg, Mirror, Rearview, 3-45
Bracket, Mtg, Motor, 2-97, 2-101, 3-55
Bracket, Mtg, Needle, 3-55
Bracket, Mtg, Prop Rod, 2-93
Bracket, Mtg, Radiator, 2-37, 2-39
Bracket, Mtg, Rocker Arm [Ku], 5-13
Bracket, Mtg, Sensor, 2-51
Bracket, Mtg, Skirt, Brush Door, 2-77, 2-81
Bracket, Mtg, Skirt, Door, 2-77, 2-81
Bracket, Mtg, Skirt, Rbr, Dsl, 2-35, 2-37, 2-39
Bracket, Mtg, Sppt, 2-45
Bracket, Mtg, Spray Handle, 3-51
Bracket, Mtg, Spray Wand [FaST, Conv], 3-51
Bracket, Mtg, Spring, 2-67
Bracket, Mtg, Sqge, 3-7
Bracket, Mtg, Strainer, 3-5
Bracket, Mtg, Switch, 2-53
Bracket, Mtg, Tank, Soltn, 2-85
Bracket, Mtg, Valve, 3-3
Bracket, Mtg, Valve, Hyd, 2-123
Bracket, Propel, Dsl, 2-51
Bracket, Protector, Float Switch, 3-55
Bracket, Retain, Hose, 2-89, 2-95
Bracket, Retainer, Lh, 2-63
Bracket, Retainer, Pump, 3-19
Bracket, Retainer, Rh, 2-65
Bracket, Retainer, Safety, 2-51
Bracket, Retainer, Spring, 2-5
Bracket, Retaining, Hose, 2-89, 2-95, 3-61
Bracket, Shrd, Fan, Lh, 2-37
Bracket, Shrd, Fan, Rh, 2-37
Bracket, Shrd, Fan, Upper, 2-37
Bracket, Shrd, Fan, Upper, Lh, 2-37
Bracket, Shrd, Radiator, Dsl, Ce, 2-39
Bracket, Sppt, 2-63, 2-65
Bracket, Sppt, Alternator, Dsl, 2-31
Bracket, Sppt, Cover, Tank, Recvy, 2-93
Bracket, Sppt, Radiator, Upper, 2-35
Bracket, Sppt, Seat, 2-15
Bracket, Sppt, Strobe Light, 3-37, 3-39, 3-41
Bracket, Sppt, Tank, Cntr, 2-85
Bracket, Sppt, Tank, Lh, 2-93
Bracket, Sppt, Tank, Rh, 2-93
Bracket, Valve, Sba [M20 AND T20], 3-15
Brake Assy, Drum, Mech, 07.9d [6600]], 2-47
Brake Kit, Repair, 2-47
Brush Assy, Disk, Scb, 16.0d, Heavy Duty Polypropylene, 2-5
Brush Assy, Disk, Scb, 16.0d, Nylon, 2-5
Brush Assy, Disk, Scb, 16.0d, Super Abrasive, 2-5
Brush Assy, Disk, Scrub, 16.0 D, Heavy Duty Polypropylene (Replaced by 1220236), 2-5
Brush Assy, Disk, Scrub, 16.0 D, Super Abrasive (Replaced by 1221543), 2-5
Brush Assy, Disk, Scrub, 16.0D, Nylon (Replaced by 1220235), 2-5
Brush Assy, Disk, Sweep, 24.oD, Polypropylene (Replaced by 1220185), 2-5
Brush Assy, Disk, Swp, 24.0d, Polypropylene, 2-5
Brush Kit, Hub Assy, Drive, Ci [Hdpe In], 2-5
Brush Kit, Hub Assy, Drive, Ci [Uhmw], 2-5
Brush, Sweep / Scrub, 48L, 24 Sr, Heavy Duty Polypropylene, 2-3
Brush, Sweep / Scrub, 48L, 24 Sr, Polyester, 2-3
Brush, Sweep / Scrub, 48L, 24 Sr, Polypropylene, 2-3
Brush, Sweep / Scrub, 48L, 24 Sr,Super Abrasive, 2-3
Brush, Sweep / Scrub, 48L, Wndw, Super Abrasive, 2-3
Brush, Sweep / Scrub, 48L, Wndw, Polypropylene, 2-3
Bumper Wldt, Brush, Side, 3-7, 3-9
Bumper, Rbr, 0.5d 0.16t M5 X 08, 2-51
Bumper, Sqge, 2-73
Bumper, Ure, 1.50d 1.25l, 3-63
Bushing, Eccentric, Adj, 2-89, 2-95
Bushing, Flng, 0.32b 0.50d 0.24l, Bnz, 2-75
Bushing, Flng, 0.50b 0.59d 0.38l, 2-89, 2-95
Bushing, Flng, 0.63b 0.75d 0.38l, 2-75, 2-77, 2-81
Bushing, Flng, 0.87b 1.25d 0.38l, 2-53
Bushing, Flng, 1.00b 1.13d 0.50l, 2-61, 2-71
Bushing, Gear, Gov [Ku], 5-3
Bushing, Gear, Idler [Ku], 5-15
Bushing, Pin, Piston [Ku], 5-17
Bushing, Sleeve, 0.37b 0.50d 0.50l, Oib, 2-49
Bushing, Sleeve, 0.50b 0.59d 0.50l, Bnz, 3-11
Bushing, Sleeve, 0.62b 0.72d 0.50l, Fgl, 2-75
Bushing, Sleeve, 0.63b 0.72d 0.38l, 2-79, 2-83
Bushing, Sleeve, 0.75b 0.88d 0.25l, 2-89, 2-95
Bushing, Sleeve, 0.88b 1.00d 0.75l, Bnz, 2-53
Bushing, Sleeve, 1.00b 1.13d 1.50l, Fgl, 3-11
Button, Cntrl, Horn, 2-17
Bypass Valve Kit, Pump, Repair,, 4-24

C

Cable, 06ga 16.0l Red .38ring /.38ring, 2-31
Cable, Battery, 02ga 48.0l Red .41ring, 2-43
Cable, Battery, 02ga 60.0l Blk .41ring, 2-43
Cable, Glv .06d 012.0l .26eye /.26eye, 3-63
Cable, Glv .09d 042.0l .38eye /.38eye, 2-19
Cable, Glv .13d 015.8l .50eye /.50eye, 2-79, 2-83
Cable, Push / Pull, 068.0l, 2-49
Cable, Push / Pull, 098.0l .25-28/.25-28, 2-51
Cam, 2-73
Cam, Centering, Pintle, 2-51
Cam, Front, 3-9
Cam, Fuel [Ku], 5-26
Cam, Rear, 2-73
Camshaft, 5-26
Camshaft Assy [Ku], 5-15
Cap, 5-27
Cap Assy, Tank, Drain, 2-93, 4-3
Cap Screw, 4-10
Cap Screw Cl, 4-11
Cap, Arm, Lift, 2-59
Cap, Breather, Hyd w/Chain (CE Only), 2-121
Cap, Breather, Hyd, 2.4 Ds, 2-121
Cap, End, Valve, Steering, 4-13
Cap, Fuel, Tank, 2-25
Cap, Hub, Dust, 2.57d 0.77l, 2-47
Cap, Radiator, 14 Psi [Stant], 2-37
Cap, Radiator, 14Psi [Stant], 2-35, 2-39
Cap, Sealing, 5-5
Cap, Tank, 3-5
Cap, Valve [Ku], 5-13
Cap, Vinyl, 57mmid X 23mml, 2-63, 2-65
Capacitor, Plug [4700uf, 25v], 3-36
Cartridge, Psi Cntrl, Valve, Hyd, 4-15, 4-19
Caster, Pivot, 2-75
Chain, Str, 4/0, 08 Link, 2-71
Channel Wldt, Pivot, 3-11
Channel, Inlet, 2-101
Channel, Mtg, Seal, Shrd, Lh, 2-21
Channel, Shield, Muffler, 2-33
Channel, Upper, Tower, Lift, 2-7
Chech Valve Kit, Pump, Repair,, 4-24
Circuitbreaker, 02.0a, Resetable, 3-27
Circuitbreaker, 2.0a, Resetable, 3-27
Clamp [Kubota], 5-8
Clamp Wldt, Front, 2-73
Clamp Wldt, Rear, 2-73
Clamp, Cable, Nyl, 0.62d, Nat, 3-47
Clamp, Cable, Ss, 0.50d X 0.50w [Insul], 4-27
Clamp, Cable, Ss, 1.12d X 0.38w, 1hole, 2-91
Clamp, Cable, Ss, 2.50d X 1.00w, 1hole, 2-99
Clamp, Cable, Stl, 0.25d X 0.56w, 1hole, 3-39, 3-41

Clamp, Cable, Stl, 0.69d X 0.62w, 1h, 2-51
Clamp, Cable, Stl, 1.00d X 0.75w, 1hole, 2-23, 2-27, 2-29, 2-119
Clamp, Cable, Stl, 1.50d X 1.00w, 1hole, 2-7, 2-9, 2-43, 2-119, 3-55
Clamp, Hose, 5-12, 5-33
Clamp, Hose, Heater [Ku], 5-33
Clamp, Hose, Wir, .52 - .56, Yel, 4-27
Clamp, Hose, Wir, .63 - .66, Blk, 4-27
Clamp, Hose, Wormdrive, 0.25-0.62d, .31w, 2-35, 2-41, 3-3, 3-5, 3-19, 3-29
Clamp, Hose, Wormdrive, 0.31-0.88d, .31w, 2-25, 2-27, 2-43, 3-13, 3-19, 3-21, 3-23, 3-29, 3-31, 3-33, 3-51
Clamp, Hose, Wormdrive, 0.56-1.06d, .56w, 2-23, 2-91, 3-3, 3-5, 3-13, 3-21, 3-23, 3-31, 3-33, 3-51, 3-55
Clamp, Hose, Wormdrive, 0.81-1.50d, .50w, 2-35, 2-41, 3-5
Clamp, Hose, Wormdrive, 1.25-2.00d, .50w, 2-35, 2-41
Clamp, Hose, Wormdrive, 1.81-2.75d, .50w, 2-29
Clamp, Hose, Wormdrive, 2.50-3.50d, .50w, 2-73, 2-89, 2-95
Clamp, Hose, Wormdrive, 3.56-4.50d, .50w, 2-89, 2-95, 2-97, 2-101
Clamp, Hose, Wormdrive, 3.75-4.62d, .62w, 2-97
Clamp, Hyd, 0.50d, 2-63, 2-65
Clamp, Mtg, Fltr, Air, 2-29
Clamp, Muffler, 1.62d, 2-33
Clamp, Muffler, 2.00D, 2-33
Clamp, Pipe, 5-33
Clamp, Tube, 0.37d 0.37d, 2 Hole, 2-119
Clamp, Tube, Inj, Pipe #1 [Ku], 5-21
Clamp, Tube, Inj, Pipe #21 [Ku], 5-21
Clevis, Adj, 0.31pin, 0.31-24, 2-49
Clevis, Adj, 0.31pin, 0.31-24, Lh, 2-49
Clip, Grip, Finger, .875-1.25, 3-51
Clip, Grip, Finger, 0.88-1.25d, 3-27
Clip, Grip, Finger, 1.00-1.88d White,Vyl, 3-49, 3-53
Clip, Keeper, Open, 2-37, 2-39
Clutch, Over Running, 5-19
Collar, 5-33
Collar, Crank, Front [Ku], 5-17
Collar, Gear [Ku], 5-15
Collar, Govnr [Ku], 5-29
Column, Pump, Water, 4-3
Column, Steering, 09.9L 0.86D 36Tooth, 2-17
Comp. Flange, Water, 5-30
Comp. Flywheel, 5-18
Complete Pump Kit, Pump, Repair,, 4-24
Connector [Ku], 5-33
Connector, Fem, 02cav, Mp280 Sealed, 4-24
Contact Kit, W/ Brush [En], 2-17
Control Box Assy Kit, Replmt, Telem[Can], 3-47
Control Box Assy Kit, Replmt, Telem[Usa], 3-47
Control, Govnr [All Purpose], 2-27
Controller Kit, Replmt [Ec-H20], 4-27
Converter, Ele, 12-36 Vdc, 3-27
Cooler, Hyd, 25gpm 325btu Of12 13x12x2, 2-119
Cord, Ele, Glowplug, 5-21
Coupler, Pump, 4-7
Coupling, Drive, Flex, 09.5d /13tooth, 2-23
Coupling, Nozzle, Spray, 3-51
Cover, 5-7, 5-19, 5-27
Cover Kit, Tank, Soltn, Lh, Replmt, 2-85
Cover Kit, Tank, Soltn, Lh, Replmt, (Ce & JP), 2-85
Cover Kit, Tank, Soltn, Rh, Replmt, 2-85
Cover Kit, Tank, Soltn, Rh, Replmt, (Ce & JP), 2-85
Cover Wldt, Power Supply, 3-27
Cover, Backrest, 4-29
Cover, Brg Case, Eng [Ku], 5-9
Cover, Cushion, 4-29
Cover, Cylinder Head, 5-10
Cover, End, 4-7
Cover, End, Hyd Pump, 4-9
Cover, Fuse, Block, 2-43
Cover, Hppr, 2-57
Cover, Lever, Gov [Ku], 5-29
Cover, Lower, Lh, 2-21
Cover, Lower, Rh, 2-15
Cover, Tank, 2-93
Cover, Tank, Recvy, 2-93
Cover, Thermostat, 5-30
Cover, Trimmed, 3-27
Crank Kit, Pump, F/79323, Replmt, 4-23
Crankcase, Complt [Ku], 5-3
Crankpin, Metal [Ku], 5-17
Crankshaft, 5-17
Crankshaft, Metal [Ku], 5-9, 5-17
Crossmember Wldt, 2-75
Cup Holder, Rwk, 2-13
Cylinder, Hyd, 1.5B 07.8L 02.75Strk 2500, 2-61
Cylinder, Hyd, 1.5b 07.8l 02.75strk 2500, 3-11
Cylinder, Hyd, 1.5b 07.8l 02.80strk 2500, 2-67, 2-71, 2-79, 2-83, 3-11
Cylinder, Hyd, 2.0B 24.1L 15.00Strk 3000, 2-53
Cylinder, Hyd, 2.0b,15.2l,09.00strk,3000, 2-45

D

Detergent, Pkg, 2 Liter, Sgl [665], 3-19
Detergent, Pkg, 2 Liter, Sgl [965, Tco], 3-19
Diaphragm Kit, Pump, Repair,, 4-24
Diode, Ele, Plug, 2-43
Dipstick, Oil [Ku], 5-4
Door Wldt, Brush, 2-63, 2-65
Door Wldt, Brush, Idler, 2-63, 2-65
Door Wldt, Brush, Lh, 2-83
Door Wldt, Brush, Rh, 2-79
Door Wldt, Hppr [M30], 2-61
Drive, 4-10
Drive [Cl], 4-11
Drive, Motor, Hyd, 4-5
Duct, Vacfan, Casting, 2-101

E

Ear, Lifting, Eng [Ku], 5-5
ec-H2O Kit, Flush, Replmt[M20, M30&T20], 3-29
Electrode, 5 Plate, High Flow, 4-27
Electrode, Cylindrical, 4-27
Element, Breather, 5-10
Element, Fltr, Air [Dn], 1-1, 2-29
Element, Fltr, Air, Safety (OPTION), 2-29
Element, Fltr, Fuel [Dn], 1-1, 2-27
Element, Fltr, Oil, Spin-On (Mits), 2-21
Element, Fltr, Oil, Spin-On [Ku], 1-1, 2-23
End Cap, 4-10
End Cap, Motor, Hyd [En], 4-11
Engine, Block, Long [Mits 12mm] (See Engine Breakdown), 2-21
Engine, Dsl, Turbo [Kubota M30] (See Engine Breakdown), 2-23
Extinguisher Kit, Fire, Ci [M20/T20/M30], 3-64
Extinguisher, Fire, 2.5 Lb Dry, 3-64

F

Fan Kit, Scrub, Replmt [M20&T20], 2-97
Fan, Cooling, 14.1d, 6 Blade, 0.5b Taper, 2-31
FaST Kit, Ci [inj Rebld, M30/M20 III], 4-30
FaST Kit, Ci, Injector Filters[FaST Ii+], 4-30
FaST Kit, Injector [M20/T20/M30 FaST III] (See Breakdown), 3-19
FaST Kit, Injector [M20/T20/m30 FaST III}, 4-30
FaST Kit, Seal, injector, Ci [FaST III], 4-30
Filter Assy, Air, 2-29
Filter Assy, Fuel, Dsl, 2-27
Filter Assy, Hyd, 10mic, 1-1, 2-121
Filter, In-Line, Pf06/Pf06 080mesh 02.6l, 3-19, 3-29
Filter, Oil [Ku], 5-4
Filter, Panl, Syn, 4.2 X 20.0 X 30.0, 1-1, 2-57
Filter, Soltn, 020mesh, Pm12 3.2d 08.0l, 3-5
Filter, Soltn, 20mesh, Pm12 3.1d 02.6l, 1-1, 2-85, 3-55
Filter, Y, Inline, .75, 3-55
Fitting Assy, Qdc, Pf04, 3-29
Fitting Kit, Hose, Garden, 3-3
Fitting, Brs, Breather [02mp], 2-59
Fitting, Brs, E45, Pf02/Pm02, 2-23
Fitting, Brs, E90, Bm03/Pm02, 2-25, 2-59, 2-93, 3-5
Fitting, Brs, E90, Bm12/Pm12, 3-55
Fitting, Brs, E90, Em05/Pm02, 2-27

Fitting, Brs, E90, Em05/Pm04, 2-25
Fitting, Brs, E90, Em12/Pm08, 3-55
Fitting, Brs, E90, Pf08/Pm06, 3-55
Fitting, Brs, Qdc, Bm12/Qf08, 3-3
Fitting, Brs, Qdc, Pf08 [Parker Bh3f], 3-3
Fitting, Brs, Snubber, Pm02/Pf02, 3-29
Fitting, Brs, Spcl [Garden Hose], 3-51
Fitting, Brs, Str, Bm03/Pm02, 2-59
Fitting, Brs, Str, Bm12/Pm08, 3-55
Fitting, Brs, Str, Bm12/Pm12, 3-55
Fitting, Brs, Str, If05/Pm04, 2-27
Fitting, Brs, Str, Pf02/Pm02 [Bspt], 2-23
Fitting, Brs, Str, Pf02/Pm06, 3-29
Fitting, Brs, Str, Pf04/Pm06, Bshg, 2-35, 2-41
Fitting, Brs, Str, Pf06/Pf06 Bh, 3-51
Fitting, Brs, Str, Pf06/Pm04, 3-53
Fitting, Brs, Str, Pf06/Pm12, 3-51
Fitting, Brs, Str, Pm02, Service (CE ONLY), 2-29
Fitting, Brs, Str, Pm04/Pm06 [Hp], 3-53, 3-55
Fitting, Brs, Str, Pm06/Pm08 [Hp], 3-55
Fitting, Brs, Str, Pm08/Garden Hose, 3-51
Fitting, Brs, Tee, Pm04/Pf04/Pf04, Run, 3-19
Fitting, Draincock [Ku], 5-3
Fitting, Draincock, E90, .25npt, 2-35, 2-41
Fitting, E, Gr, 4-3
Fitting, Fuel [Ku], 5-21
Fitting, Grease, Str Pm04 .47l, 2-53, 2-61, 2-67, 2-75
Fitting, Grease, Str Pm04 .63l, 2-45
Fitting, Hyd, Cap, Jf08, 2-119, 3-15
Fitting, Hyd, E45, Jf08/Jm08, 2-113
Fitting, Hyd, E45, Jf10/Jm10, 2-107
Fitting, Hyd, E45, Jm04/Om04, 3-15
Fitting, Hyd, E45, Jm04/Om06, 2-45
Fitting, Hyd, E45, Jm06/Om04, 2-97
Fitting, Hyd, E45, Jm06/Om06, 2-45, 3-17
Fitting, Hyd, E45, Jm08/Om08, 2-97, 2-121, 2-123, 3-15
Fitting, Hyd, E45, Jm08/Om10, 2-99, 2-117
Fitting, Hyd, E45, Jm10/Om12, 2-45
Fitting, Hyd, E45, Jm12/Om16, 2-121
Fitting, Hyd, E45, Jm20/Om20, 2-121
Fitting, Hyd, E90, Jf04/Jm04, 2-65, 2-123, 3-15
Fitting, Hyd, E90, Jf06/Jm06, 3-15
Fitting, Hyd, E90, Jf08/Jm08, 2-17, 2-119
Fitting, Hyd, E90, Jm04/Om04, 2-53, 2-61, 2-71, 2-79, 2-83, 2-123, 3-11
Fitting, Hyd, E90, Jm04/Om06, 3-57, 3-59
Fitting, Hyd, E90, Jm04/Pm02, 2-121
Fitting, Hyd, E90, Jm06/Om04, 2-67, 2-99, 2-101, 3-11
Fitting, Hyd, E90, Jm06/Om06, 2-17, 2-123
Fitting, Hyd, E90, Jm06/Om06, Long, 2-123
Fitting, Hyd, E90, Jm06/Om08, 2-117
Fitting, Hyd, E90, Jm08/Om08, 2-63, 2-65, 2-101, 2-117, 3-15
Fitting, Hyd, E90, Jm08/Om08, Long, 2-123
Fitting, Hyd, E90, Jm08/Om10, 3-7, 3-9
Fitting, Hyd, E90, Jm10/Om12, 2-117
Fitting, Hyd, E90, Jm12/Om12, 2-119
Fitting, Hyd, E90, Jm12/Om12, Long, 2-119
Fitting, Hyd, E90, Om04/Qm04, 2-123, 3-15
Fitting, Hyd, Plug, Jm08, 2-23
Fitting, Hyd, Plug, Om04, 2-123, 4-15, 4-17
Fitting, Hyd, Plug, Om06, 2-121, 2-123
Fitting, Hyd, Plug, Om08, 4-7
Fitting, Hyd, Plug, Om10, 2-121
Fitting, Hyd, Rst, Jf04/Jm04, .028, 2-53
Fitting, Hyd, Rst, Spcl, 2-79, 2-83
Fitting, Hyd, Str, Jf04/Qm04, 3-15
Fitting, Hyd, Str, Jf06/Jm04, 2-119
Fitting, Hyd, Str, Jm04/Om04, 2-63, 2-65, 2-123, 3-15
Fitting, Hyd, Str, Jm04/Om06, 3-15, 3-57, 3-59
Fitting, Hyd, Str, Jm06/Om04, 2-101
Fitting, Hyd, Str, Jm06/Om06, 2-17, 2-121, 3-15, 3-17
Fitting, Hyd, Str, Jm06/Om06, Long, 2-17, 2-123
Fitting, Hyd, Str, Jm08/Om06, 2-17
Fitting, Hyd, Str, Jm08/Om08, 2-101, 2-117, 3-15
Fitting, Hyd, Str, Jm08/Om10, 2-99
Fitting, Hyd, Str, Jm08/Om12, 3-57, 3-59
Fitting, Hyd, Str, Jm10/Om10, Long, 2-123
Fitting, Hyd, Str, Jm10/Om12, 2-45
Fitting, Hyd, Str, Jm20/Om16, 2-117
Fitting, Hyd, Str, Metric, Om10/If05, 2-27
Fitting, Hyd, Str, Om04/Pf04, 2-123
Fitting, Hyd, Str, Om04/Qm04, 3-15
Fitting, Hyd, Str, Pf02/Pm04, 2-25, 2-27
Fitting, Hyd, Str, Pm02/Pm02, 2-27
Fitting, Hyd, Tee, Jf06/Jm06/Jm06, Run, 2-101
Fitting, Hyd, Tee, Jf08/Jm08/Jm08, Br, 2-99
Fitting, Hyd, Tee, Jm04/Jm04/Om04, Run, 2-123
Fitting, Hyd, Tee, Jm08/Jm08/Om08, Br, 2-97, 2-123
Fitting, Hyd, Tee, Jm08/Jm08/Om08, Run, 3-57, 3-59
Fitting, Nyl, Qdc, E90, Bm06/ Qm10, 3-19
Fitting, Nyl, Qdc, E90, Bm08/ Qm10, 3-19, 3-29
Fitting, Pipe, E90, Pf02/Pm02 (CE ONLY), 2-29
Fitting, Pipe, Plug [Ku], 5-3, 5-5, 5-7
Fitting, Pipe, Plug, Pm02, Sq Head, 2-25
Fitting, Pipe, Water [Ku], 5-8
Fitting, Plstc, E90, Bm05/Bm05, Nyl, 3-29
Fitting, Plstc, E90, Bm06/Bm06, 3-5, 4-27
Fitting, Plstc, E90, Bm06/Pm04, Nyl, 3-19
Fitting, Plstc, E90, Bm06/Pm12, Nyl, 3-3
Fitting, Plstc, E90, Bm08/Bm08, 3-29
Fitting, Plstc, E90, Bm08/Pf08s, Swivel, 3-51
Fitting, Plstc, E90, Bm08/Pm04, 3-29
Fitting, Plstc, E90, Bm08/Pm06, 3-29, 3-51
Fitting, Plstc, E90, Bm10/Pm12, 3-19, 3-29
Fitting, Plstc, E90, Bm12/Pf12, 3-5
Fitting, Plstc, E90, Bm12/Pm08, 3-3
Fitting, Plstc, E90, Bm12/Pm12, 3-3, 3-5, 3-19, 3-29
Fitting, Plstc, E90, Pf Bm [Es Pump], 4-3
Fitting, Plstc, E90, Pf12/Pm12, 2-85, 3-3
Fitting, Plstc, Pf12/Pf12, Bh, 2-85, 3-55
Fitting, Plstc, Pipe, Cap, Pf04, 3-19, 4-27
Fitting, Plstc, Str, Bm04, Cplg, Fem, 3-19
Fitting, Plstc, Str, Bm04/Bm08, 3-29
Fitting, Plstc, Str, Bm04/Pm04, 3-29
Fitting, Plstc, Str, Bm05/Pm04, 3-29
Fitting, Plstc, Str, Bm06/Bm08, 3-33
Fitting, Plstc, Str, Bm06/Pm04, 3-19, 4-27
Fitting, Plstc, Str, Bm06/Pm06, 3-19
Fitting, Plstc, Str, Bm08/Pf08s, Swivel, 3-51
Fitting, Plstc, Str, Bm08/Pm12, 3-19, 3-29
Fitting, Plstc, Str, Bm10/Bm10, 2-91
Fitting, Plstc, Str, Bm10/Pm12, 2-91, 3-3
Fitting, Plstc, Str, Bm12/Pm08, Nyl, 3-3, 4-3
Fitting, Plstc, Str, Bm12/Pm12, 2-91, 3-3
Fitting, Plstc, Str, Pf06/Qm10, Pvc, 3-29
Fitting, Plstc, Str, Pm02/Bm05, 4-27
Fitting, Plstc, Str, Pm04, Cplg, Mal, 3-19
Fitting, Plstc, Str, Pm04/Pm06, Nyl, 3-29
Fitting, Plstc, Str, Pm08/Pm08, 3-3
Fitting, Plstc, Str, Pm12/Pm12 1.60l, 3-3, 3-19, 3-29
Fitting, Plstc, Tee, Bm03/Bm03/Bm03, 3-5
Fitting, Plstc, Tee, Bm04/Bm04/Bm04, 3-19
Fitting, Plstc, Tee, Bm06/Pm02/Bm06, 4-27
Fitting, Plstc, Tee, Bm08/Bm10/Bm10, Br, 3-21, 3-31, 3-33, 3-51
Fitting, Plstc, Tee, Bm08/Bm12/Bm12, Br, 3-21, 3-31, 3-33, 3-51
Fitting, Plstc, Tee, Bm10/Bm10/Bm10, 3-13
Fitting, Plstc, Tee, Bm12/Bm12/Bm12, 3-13
Fitting, Plstc, Tee, Pf08/Pf08/Pf08, 3-3
Fitting, Plstc, Tee, Pf12/Pf12/Pf12, 3-3, 3-19, 3-29
Fitting, Plstc, Y, Bm08/Bm08/Bm08, Nyl, 3-19, 3-23, 3-33
Fitting, Plug [Ku], 5-3
Fitting, Plug, Org, #6, Valve [Cec], 4-15, 4-17, 4-19, 4-21
Fitting, Ss, Qdc, Fem, 3-53
Fitting, Ss, Qdc, Mal, 3-53, 3-55
Flange Kit, 4-9
Flange Mounting, 4-10
Flange, Motor, Hyd [En], 4-11
Flange, Muffler, 5-31

Flange, Pump, Water [Ku], 5-8
Flange, Sleeve, 5-25
Flap, Battery, 2-13
Flapper, Valve, Pump, Water, 4-3
Frame Wldt, Main, Replmt [M30], 2-7
Frame Wldt, Sqge, Lh, 2-81
Frame Wldt, Sqge, Rh, 2-77
Frame Wldt, Sqge, Side Brush, 3-7
Frame, Drive End, 5-19
Frame, End, 5-19
Front Tabbed Skirt, 1-1
Fuel Pump Cover Plate, 5-23
Fuelline, .31d 05if/05if, Stl, 2-27
Fuse, Blade, 15a, 32vdc, 2-43

G

Gasket, 5-3, 5-10, 5-25, 5-27, 5-33
Gasket [Ku], 2-33, 5-27
Gasket, .13, 07.68w 09.45l, Adh [Poron], 2-43
Gasket, .19, 4.05id 5.29od [Buna], 2-93
Gasket, .25 1.88d 1.0id [Poron], 4-3
Gasket, 1.50, 03.75w, 03.75l, Adh, 2-99
Gasket, 2.00, 10.00w, 13.00l, Adh, 2-99
Gasket, 4.05id 5.29od .19 [Buna], 4-3
Gasket, Bearing, Case [Ku], 5-9
Gasket, Case, Gear [Ku], 5-7, 5-9
Gasket, Cover, Gov [Ku], 5-29
Gasket, Cover, Recvy Tank, 2-93
Gasket, Cover, Spd [Ku], 5-28
Gasket, Delivery Valve, 5-25
Gasket, Door, Dump, 2-61
Gasket, F/ Bolt [Ku], 5-21
Gasket, Foam, .50, 14.76id 16.54od, Adh, 2-99
Gasket, Fuel Pump, 5-23
Gasket, Head Cover, 5-10
Gasket, Head, Cyl [Ku], 5-5
Gasket, Manifold, Exhaust, 5-11
Gasket, Manifold, Intake [Ku], 5-12
Gasket, Neo, 1.25, 04.45w 06.42l, Adh, 2-101
Gasket, Nozzle, Injector [Ku], 5-21
Gasket, Plt, Hose, Vacuum, 2-97
Gasket, Pump, Water [Ku], 5-8
Gasket, Sender, Fuel, 2-25
Gasket, Solenoid, Throttle [Ku], 2-23
Gasket, Sqge, 2-73
Gasket, Thermostat, 5-30
Gasket, Turbo [Ku], 5-31
Gasket, Ure, .16, 3.23id 3.63od, 2-93
Gasket, Water Flange, 5-30
Gasspring, 180lb, 03.0strk, 2-15
Gauge Assy, Oil [Ku], 5-4
Gauge, Sensing, Level, 2-121
Gear, 5-19
Gear, Camshaft [Ku], 5-15
Gear, Case [Ku], 5-7
Gear, Cshft [Ku], 5-17
Gear, Govnr [Ku], 5-26
Gear, Idler, Cam [Ku], 5-15
Gear, Pump, Fuel [Ku], 5-26
Gear, Pump, Oil [Ku], 5-17
Gear, Ring [Ku], 5-18
Geroler, Motor, Hyd, 4-5
Gerotor Set, 4-10
Gerotor Set [Cl], 4-11
Grill Wldt, Front, 2-19
Grill, Lh, 2-15, 2-21
Grip, Handle, 2-89, 2-95
Grommet, Blind, 4-27
Grommet, Pye, 0.37id, F/1.5h, .13 Matl, 3-5
Grommet, Rbr, 0.38id, F/0.5h, .12 Matl, 3-47
Grommet, Rbr, 0.50id, F/0.8h, .12 Matl, 3-42, 3-43
Grommet, Rbr, 0.62id, F/0.9h, .06 Matl, 2-59, 3-27
Grommet, Rbr, 0.75id, F/1.3h, .12 Matl (CE ONLY), 2-15
Grommet, Rbr, 1.50id, F/1.8h, .19 Matl, 2-59
Guard Kit, Sqge, Ci [M30], 3-63
Guard Wldt, Brush, Side, 3-13
Guard Wldt, Sqge, 3-63
Guard Wldt, Sqge, Pntd [M30], 3-63
Guard Wldt, Top, Ohg, 3-45
Guard, Fan, Dsl, (CE Only), 2-37
Guard, Fan, Dsl, Ce (CE Only), 2-35
Guide, Valve, Exhaust, 5-5
Guide, Valve, Inlet, 5-5

H

Handle Wldt, Drain, 2-93
Handle, Gun, Trigger, 3-53
Handle, Valve, Pinch, Lh, 2-95
Handle, Valve, Pinch, Rh, 2-89
Harness, Eng, Dsl [M30], 2-159
Harness, Extn, Telem [M30], 3-47
Harness, Headlight, 2-153
Harness, Hppr [M20/M30], 2-155
Harness, Hppr, Cover [M20], 2-157
Harness, Jumper [Deutsch To Mpack], 4-17, 4-21
Harness, Main [M30], 2-152
Harness, Press Wash [M30], 3-53
Harness, Spray, Nozzle, 3-51
Harness, Temp, Eng, Switch [M30], 2-23
Harness, Warning / Backup [M20 & T20], 3-37, 3-39, 3-41
Harness, Warning / Ohg [M20], 3-42, 3-43
Harness, Wire [Ec- H2o, Mako, 2.0l & Dsl], 3-36
Harness, Wire [Ec- H2o], 3-36
Harness, Wire [FaST Gen 2], 3-25
Head, Cylinder [Ku], 5-5
Headlight, 12vdc, 27watt, 2.1a, Oval (Rpl by 1060942), 2-7
Headlight, 12Vdc, Oval, Halogen, 2-7
Hinge Wldt, Lh, Pin, 2-21
Hinge Wldt, Lh, Tube, 2-21
Hinge Wldt, Shrd, Rh, 2-15
Hinge, .38pin .12 3.5w 06.5l, 6/0.38sl, 2-19
Hinge, .50pin .19 4.0w 06.0l 3/0.44sl, 2-79, 2-83
Holder, Delivery Valve, 5-25
Holder, Gear [Ku], 5-26
Holder, Govnr [Ku], 5-26
Hopper Wldt, Lift [M30], 2-59
Hopper, Debris [M30], 2-55
Horn, 12vdc, Dba [Wolo], 2-43
Hose Assy, Sqge, 2-93
Hose Assy, W/1cuff, 1.0d 009l 1.0/, 2-55
Hose Assy, W/2cuff, 1.5d 084l [Vacwand], 3-49
Hose, 0050, 04, If05str / Im05str, 10.0, 2-27
Hose, 0300, 08, Jf08str / None, 19.0, 2-23
Hose, Afmkt, Coolant Recvy, 05ft, 2-35
Hose, Afmkt, Coolant Recvy, 08ft, 2-41
Hose, Afmkt, Pvc, Brd 0.62id 01ft, 3-5
Hose, Afmkt, PVC, Brd, 0.31Id, 03Ft, Clr, 3-29, 4-27
Hose, Afmkt, Pvc, Brd, 0.38id, 01ft, Clr, 4-27
Hose, Afmkt, Pvc, Brd, 0.38id, 02ft, Clr, 3-33, 4-27
Hose, Afmkt, Pvc, Brd, 0.38id, 03ft, Clr, 3-5, 3-19
Hose, Afmkt, Pvc, Brd, 0.50id, 01ft, Clr, 3-29
Hose, Afmkt, Pvc, Brd, 0.50Id, 08Ft, Clr, 3-19, 3-21, 3-23, 3-29, 3-33, 3-51
Hose, Afmkt, Pvc, Brd, 0.50id, 12ft, Clr, 3-31
Hose, Afmkt, Pvc, Brd, 0.62id, 01ft, Clr, 2-91
Hose, Afmkt, Pvc, Brd, 0.62id, 03ft, Clr, 3-33
Hose, Afmkt, Pvc, Brd, 0.62id, 08ft, Clr, 2-91, 3-13, 3-21, 3-31
Hose, Afmkt, Pvc, Brd, 0.75id, 01ft, Clr, 3-5
Hose, Afmkt, Pvc, Brd, 0.75id, 03ft, Clr, 3-3
Hose, Afmkt, Pvc, Brd, 0.75id, 08ft, Clr, 2-91, 3-3, 3-13, 3-21, 3-31
Hose, Afmkt, Pvc, Clr, 0.25id, 03ft, 3-19, 3-29
Hose, Afmkt, Pvc, Clr, 0.38id, 01ft, 3-19
Hose, Afmkt, Pvc, Clr, 0.38id, 03ft, 2-27, 3-3, 3-19
Hose, Afmkt, Pvc, Clr, 0.38id, 08ft, 3-5
Hose, Afmkt, Pvc, Clr, 0.50id, 08ft, 3-23
Hose, Afmkt, Pvc, Wir, 0.50id, 03ft, Clr, 3-19
Hose, Afmkt, Pvc, Wir, 0.75id, 02ft, Clr, 3-55
Hose, Afmkt, Pvc, Wir, 0.75id, 08ft, Clr, 3-55
Hose, Afmkt, Vacuum, 0.16id, 01ft, 2-93, 3-5
Hose, Afmkt, Vacuum, 0.16id, 03ft, 2-59
Hose, Clamp [Ku], 5-31
Hose, Drain, 3.00id X 48.0l, 2-89, 2-95
Hose, Flex, 4.00d, 24.0l, 2-97

Hose, Flex, Vacuum, 03.5d, 040.0l, 2-101
Hose, Fuel [Ku], 5-21
Hose, Fuel, 0.18id, 29.0l, 2-27
Hose, Fuel, 0.31id, 22.0l, 2-27
Hose, Fuel, 0.50id, 21.0l, 2-25
Hose, Heater, E90, 0.62id, 24.0 4.0, 3-23, 3-33
Hose, Hyd, Med04, Jf04e90/Jf04str, 016.0, 2-113
Hose, Hyd, Med04, Jf04e90/Jf04str, 022.0, 3-57, 3-59
Hose, Hyd, Med06, Jf06e90l/Jf06str,038.0, 3-17
Hose, Hyd, Med06, Jf06str/Jf06str, 022.0, 2-109, 2-111
Hose, Hyd, Med06, Jf06str/Jf06str, 042.0, 2-109, 2-111
Hose, Hyd, Med08, Jf08e45/Jf08str, 029.0, 2-113
Hose, Hyd, Med08, Jf08str/Jf08str, 025.0, 2-109, 2-111
Hose, Hyd, Med10, Jf10Str/Jf10Str, 041.0, 2-109, 2-111
Hose, Hyd, Med12, Jf12E90/Jf12Str, 029.0, 2-109, 2-111
Hose, Hyd, Med12, Jf12e90/Jf12str, 048.0, 2-109
Hose, Hyd, Med12, Jf12e90/Jf12str, 056.0, 2-109
Hose, Hyd, Med12, Jf12Str/Jf12Str, 052.0, 2-109
Hose, Hyd, Med12, Jf12Str/Jf12Str, 066.0, 2-111
Hose, Hyd, Spcl, Jf04str/Jf04str, 133.0, 2-115
Hose, Hyd, Spcl, Jf04str/Jf04str, 140.0, 2-113
Hose, Hyd, Spcl, Jf04str/Jf04str, 144.0, 2-113
Hose, Hyd, Spcl, Jf04str/Jf06str, 136.0, 2-115
Hose, Hyd, Spcl, Jf10e90/Jf10str, 063.0, 2-107
Hose, Hyd, Spcl, Jf10str/Jf10str, 56.5, 2-107
Hose, Hyd, Suc20, Jf20str/Jf20e90, 032.0, 2-109, 2-111
Hose, Hyd, Tc04, Jf04e45/Qm06, 024.0, 2-115
Hose, Hyd, Tc04, Jf04e90/Jf04str, 020.0, 2-113
Hose, Hyd, Tc04, Jf04str/Jf04e45, 035.0, 2-115
Hose, Hyd, Tc04, Jf04str/Jf04str, 025.0, 3-17
Hose, Hyd, Tc04, Jf04str/Jf04str, 039.0, 3-17
Hose, Hyd, Tc04, Jf04str/Jf04str, 044.0, 3-17
Hose, Hyd, Tc04, Jf04str/Jf04str, 58.0, 2-113
Hose, Hyd, Tc04, Jf04str/Jf04str, 96.0, 2-113
Hose, Hyd, Tc04, Jf04Str/Qm06, 028.0, 2-115
Hose, Hyd, Tc06, Jf06e90/Jf06str, 040.0, 2-107
Hose, Hyd, Tc06, Jf06e90/Jf06str, 104.0, 2-107
Hose, Hyd, Tc06, Jf06str/Jf06e45, 056.0, 2-113
Hose, Hyd, Tc06, Jf06str/Jf06str, 028.0, 3-17
Hose, Hyd, Tc06, Jf06str/Jf06str, 054.0, 2-113
Hose, Hyd, Tc06, Jf06str/Jf06str, 062.0, 3-17
Hose, Hyd, Tc06, Jf06str/Jf06str, 086.0, 3-17
Hose, Hyd, Tc08, Jf08e45/Jf08str, 018.0, 2-113
Hose, Hyd, Tc08, Jf08E45/Jf08Str, 026.0, 2-109, 2-111
Hose, Hyd, Tc08, Jf08e45/Jf08str, 096.0, 2-107
Hose, Hyd, Tc08, Jf08E45/JF08Str, 18.0, 3-55
Hose, Hyd, Tc08, Jf08e90/Jf08str, 013.0, 2-113
Hose, Hyd, Tc08, Jf08e90/Jf08str, 024.0, 3-57
Hose, Hyd, Tc08, Jf08e90/Jf08str, 029.0, 2-109, 2-111, 3-57
Hose, Hyd, Tc08, Jf08e90/Jf08str, 042.0, 3-59
Hose, Hyd, Tc08, Jf08e90/Jf08str, 046.0, 2-109, 2-111, 3-57
Hose, Hyd, Tc08, Jf08e90/Jf08str, 054.0, 3-59
Hose, Hyd, Tc08, Jf08str/Jf08e90, 012.0, 3-15
Hose, Hyd, Tc08, Jf08Str/Jf08Str, 021.0, 2-109, 2-111
Hose, Hyd, Tc08, Jf08str/Jf08str, 027.0, 3-57
Hose, Hyd, Tc08, Jf08str/Jf08str, 031.0, 2-109, 2-111
Hose, Hyd, Tc08, Jf08str/Jf08str, 039.0, 3-17, 3-57, 3-59
Hose, Hyd, Tc08, Jf08str/Jf08str, 048.0, 2-113
Hose, Hyd, Tc08, Jf08str/Jf08str, 052.0, 3-59
Hose, Hyd, Tc08, Jf08str/Jf08str, 060.0, 3-17
Hose, Hyd, Tc08, Jf08str/Jf08str, 072.0, 3-59
Hose, Hyd, Tc08, Jf08str/Jf08str, 084.0, 3-17
Hose, Hyd,Med04, Jf04str/Jf04str, 066.0, 2-107
Hose, Intake, Mold, 2.00id [Epdm], 2-29
Hose, Intake, Mold,1.8id 1.3id [Epdm], 2-29
Hose, Pvc, Clr, 0.38id 0.56od 022.0l, 2-35, 2-41
Hose, Pvc, Clr, 0.50id 0.69od 026.0l, 3-13
Hose, Pvc, Clr, 0.50id 0.69od 030.0l, 2-43
Hose, Radiator, Upper, Dsl, 2-35, 2-41
Hose, Rbr, 25ft, 3-53
Hose, Rbr, Adapter, 1.25id 1.12id, 2-35, 2-41
Hose, Rbr, E90, 1.25id 1.25id 04.2 03.1, 2-35, 2-41
Hose, Turbo, Charger [Ku], 5-31
Hose, Vacuum, 3.00id X 019.0l, 1cuff, 2-73
Hose, Water, 5-8
Hose, Water [Ku], 5-33
Hose, Water, Coil, 0.38id 0.56od, 3-51
Housing, 4-7
Housing Assy, Nozzle, 5-21
Housing Assy, Vacfan, Scrbr, 2-97
Housing Assy, Vacfan, Swpr, 2-101
Housing Kit, Drive, Front, Replmt, 2-45
Housing Kit, Pump, Water, 4-3
Housing Wldt, Brush, Drive, 2-63, 2-65
Housing Wldt, Swp, Scb, 2-67
Housing Wldt, Vacfan, Front [528], 2-97
Housing, Bottom, 4-27
Housing, Brg, Motor, Hyd, 4-5
Housing, Cplg, Qf / Pm08, 3-29
Housing, Fan, Radial Discharge, Sq Inlet, 2-99
Housing, Flywheel, Mach [1505, Kubo], 2-23
Housing, Motor, Hyd [En], 4-11
Housing, Sppt, Front Wheel, 2-45
Housing, Valve, 4-5
Housingl, 4-10
Hsg & Switch Kit, Pump, Repair,, 4-24
Hub Assy, Wheel, 5 Bolt 4.50bc Taper B, 2-45
Hub, Drive, Brush, Disk, 1.00b [6t], 3-7, 3-9
Hub, Drive, Brush, Disk, 3hole 5.8bc, 2-5
Hub, Drive, Brush, Disk, 3hole 5.8bc[6t], 2-5

I

Idler Assy, Brush, Replmt [M20/T20, M30], 2-63, 2-65
Idler Door Kit, Replmt [M20/T20/M30] (CE ONLY), 2-63, 2-65
Impeller, 11.81d X 0.500b, 2-99
Impeller, 9.00d X 1.40w X 0.376b, 2-101
Impeller, 9.5d, 18 Bl, 2-97
Impeller, Pump, Water [Ku], 5-8
Indicator, Press, 60psi (NA Only), 2-121
Indicator, Service, Fltr, Air [20h20 Dn] (CE ONLY), 2-29
Insert, :Lrg [Venturi, FaST III], 4-30
Insert, Cap, Mount, Es Pump, 4-3
Insert, Cplg, Qm, Bm08, 3-29
Insert, Plt, Cam, Pump, Hyd, 4-7
Instr, Motor, Hyd, Repair [En], 4-11
Instr, Repair, Motor, Hyd, Gear, 4-5
Instr, Repair, Pump, 4-7
Instr, Seal Kit, Motor, 4-22

Instr, Valve, Steering, Repair, 4-13
Instr. Repair Info, Motor, 4-10
Insulation, 3-45
Insulation, Acstc, 0.05, 46.6 X 02.1, 2-37
Insulation, Acstc, 0.05, 46.6 X 2.13, 2-35
Insulation, Acstc, 1.0, 21.8 X 12.5 Adh, 2-15
Insulation, Acstc, Adh, 3-29
Insulation, Acstc, Rear, 3-29
Insulation, Acstc, Rnd, 0.8, 02.5d 0.5h, 2-17
Insulation, Flame-Retardant, 0.50, 2-97
Insulation, Flame-Retardant, 0.75-0.88, 2-11, 2-15, 2-97, 3-47
Insulation, Flame-Retardant, 1.0, 2-15
Insulation, Thermal, Hyd Blanket, 2-121
Isolator, Rbr, 2-33
Isolator, Vib, .50d, 2-23
Isolator, Vib, Bshg, 1.1d 0.6l .4b 0.78h, 2-35, 2-37, 2-39, 2-97, 2-99, 2-101

J

Joint, Breather Pipe, 5-10

K

Key [Ku], 5-15, 5-17
Key-Wdruff 0.25 1.00, 4-10
Key, Ignition [Set Of 2], 1-1, 2-13
Key, Motor, Hyd, 4-5
Key, Shaft, Pump, Hyd, 4-7
Key, Sq, 0.12 X 0.12, 0.50l, 2-31
Key, Sq, 0.12 X 0.12, 0.75l, 4-22
Key, Sq, 0.12 X 0.12, 1.00l, 2-97
Key, Sq, 0.25 X 0.25, 1.25l, 2-63, 2-65
Key, Woodruff [Ku], 5-26
Key, Woodruff, 0.25 1.00 [Asa#0808], 4-11
Keychain, Rectangle, Parts & Service, 2-13
Kit, Bellows, Pump, Detgt, 4-23
Kit, Brush, Motor, Ele, 4-3
Kit, Seal, Motor, Hyd, 4-5
Kit, Seal, Motor, Hyd, Gear[Barns], 4-22
Kit, Seal, Valve, Hyd [Cec], 4-22
Kit, Valve, Check, Pump, Water, 4-3
Knob Assy, Star, 1.12d 3ear M10, 2-75
Knob, Star, 2.80d 4ear 1.1l .31-18, Pyp, 2-73
Knob, Tee, 2.5 X 1.0 1.1l 0.38-16, Plstc, 2-17
Knobs, Adjmt, Weight, 4-29

L

Label [User, Attention, ec-H2O], 2-162
Label Kit, Panel, Replmt [M20/M30 ec-H20], 2-13
Label Kit, Panel, Replmt [M20/M30], 2-13
Label Set, Brush Indicator & Removal, 2-162
Label Set, Hi Temp, 2-162
Label Set, Info/Hzrd, Press Wash, 3-55
Label Set, Info/Hzrd, Swpr / Scrbr, 2-162
Label Set, Info/Hzrd, Swpr / Scrbr (CE Only), 2-162
Label Set, Info/Hzrd, Swpr / Scrbr, Tj (Japan Only), 2-162
Label, Logo, 05.75L 2Color [ES], 2-162
Label, Logo, 07.95L 2Color [FaST], 2-162
Label, Logo, 12.3L 4Color [ec-H2O], 2-162
Label, Logo, 16.9L 4Color [ec-H2O], 2-162
Label, Machine, Telem [Fcc, Usa, 2g/3g], 3-47
Label, Model, 2Color [M30], 2-162
Label, Switch, Rocker, 2-13
Lamp, 12vdc [Speaker], 2-7
Lamp, Bulb, Flsh, 3-39, 3-42
Lamp, Bulb, Strobe, 3-41, 3-43
Lamp, Halogen [Speaker], 2-7
Latch, 2-15, 2-35, 2-57, 2-63, 2-65, 3-61
Latch, Cover, 2-85
Latch, Door [Southco 91-562-07], 2-21, 2-77, 2-81
Latch, Hook, 2-79, 2-83
Lens, Amb, F/ Strobe / Flasher, 3-39, 3-41, 3-42, 3-43
Lens, Blu, F/ Strobe / Flasher, 3-39, 3-41, 3-42, 3-43
Lens, Red, F/ Strobe / Flasher, 3-39, 3-41, 3-42, 3-43
Lever, Cntrl, Spd [Ku], 5-28
Lever, Fork [Ku], 5-29
Lever, Fork Assy [Ku], 5-29
Lever, Fork, Shaft [Ku], 5-29
Lever, Plate, Cntrl [Ku], 5-28
Lever, Stop [Ku], 5-28
Light Assy, Panel, Side, 2-9
Light Kit, Flsh, Ci [M20 / T20 / M30], 3-39
Light Kit, Flsh, W/Ohg, Ci[M20/T20/M30], 3-42
Light Kit, Strobe, Ci [M20 / T20 / M30], 3-41
Light Kit, Strobe, W/ Ohg, Ci[M20/T20/M30], 3-43
Light, Flsh, Amb, 12-48vdc, 3-39, 3-42
Light, Led, .312D, 2 Volt [Tri-Color] (ec-H20 only), 2-13
Light, Panl, 14vdc, , 1.1 X 1.0, 2-13
Light, Panl, 14vdc, 1.1 X 1.0, 2-13
Light, Strobe, Amb, 12-48vdc, 3-41, 3-43
Linard Front Squeegee - Std., 1-1
Linatex Rear Squeegee - Std., 1-1
Linatex Rear Squeegee End Gasket, 1-1
Linatex Side Brush Squeegee, 1-1
Linatex Side Squeegee, 1-1
Link Assy, Rod-End, M12, 2-71
Lock, Secondary, 2cav, Mp280 Sealed, 4-24

M

Magnet, Pickup, 2-23
Maint Kit, 400Hr, Dsl [M30], 1-1
Manifold, Exhaust [Ku], 5-11
Manifold, Inlet Assy [Ku], 5-12
Manifold, Water, 3-29
Manual, Operator [Ku], 3-65
Manual, Oprtr [M30 Diesel En], 3-65
Manual, Oprtr [M30 Diesel Es], 3-65
Manual, Oprtr [M30 Diesel Fr], 3-65
Manual, Oprtr [M30 Dsl, Bg, Ce], 3-65
Manual, Oprtr [M30 Dsl, Cn], 3-65
Manual, Oprtr [M30 Dsl, Cz, Ce], 3-65
Manual, Oprtr [M30 Dsl, De, Ce], 3-65
Manual, Oprtr [M30 Dsl, Dk, Ce], 3-65
Manual, Oprtr [M30 Dsl, Ee, Ce], 3-65
Manual, Oprtr [M30 Dsl, En, Ce], 3-65
Manual, Oprtr [M30 Dsl, Es, Ce], 3-65
Manual, Oprtr [M30 Dsl, Fi, Ce], 3-65
Manual, Oprtr [M30 Dsl, Fr, Ce], 3-65
Manual, Oprtr [M30 Dsl, Gr, Ce], 3-65
Manual, Oprtr [M30 Dsl, Hr], 3-65
Manual, Oprtr [M30 Dsl, Hu, Ce], 3-65
Manual, Oprtr [M30 Dsl, It, Ce], 3-65
Manual, Oprtr [M30 Dsl, Jp], 3-65
Manual, Oprtr [M30 Dsl, Lt, Ce], 3-65
Manual, Oprtr [M30 Dsl, Lv, Ce], 3-65
Manual, Oprtr [M30 Dsl, Nl, Ce], 3-65
Manual, Oprtr [M30 Dsl, No, Ce], 3-65
Manual, Oprtr [M30 Dsl, Pl, Ce], 3-65
Manual, Oprtr [M30 Dsl, Pt, Br], 3-65
Manual, Oprtr [M30 Dsl, Pt, Ce], 3-65
Manual, Oprtr [M30 Dsl, Ro, Ce], 3-65
Manual, Oprtr [M30 Dsl, Ru, Ce], 3-65
Manual, Oprtr [M30 Dsl, Se, Ce], 3-65
Manual, Oprtr [M30 Dsl, Si, Ce], 3-65
Manual, Oprtr [M30 Dsl, Sk, Ce], 3-65
Manual, Oprtr [M30 Dsl, Tr, Ce], 3-65
Manual, Parts [M30 Diesel En], 3-65
Manual, Service [M30 En], 3-65
Mat, Floor, 2-9
Media, Cd-Rom, Training [ec-H2O Tennant], 3-65
Mirror, Convex, 0.50D, 3-45
Module Kit, Replmt [Ec-H20], 4-27
Module Kit, Replmt [Ec-H20] (See Breakdowns), 3-27
Molding, Afmkt, Trim, Pvc, .08 .11, 01Ft, 2-9, 3-27
Molding, Trim, Pvc, .18-.31 07.5l, 2-59
Motor Kit, Pump, Repair,, 4-24
Motor Kit, Replmt, 2-97
Motor, Ele [12vdc, Shaker], 2-57
Motor, Ele, 12vdc, Pump, Water, 4-3
Motor, Ele, 12Vdc, Shakr, 2-57
Motor, Ele, Gear, 14vdc, Pump, Detgt, 4-23
Motor, Hyd Gear In 4.5 B 1500, 4-10
Motor, Hyd, Gear, [Int], 19.0 X 3000, 4-5
Motor, Hyd, Gear, Ext 0.17 Lh 3000, 2-99, 2-101
Motor, Hyd, Gear, Ext 0.19 Rh 3000, 4-22
Motor, Hyd, Gear, Ext 0.19 Rh 3000 (See Breakdowns), 2-101
Motor, Hyd, Gear, Int 04.5 Bi-Dir 1500, 2-63, 2-65

Motor, Hyd, Gear, Int 04.5 Bi-Dir 1500 (See Breakdowns), 2-63, 2-65
Motor, Hyd, Gear, Int 08.9 Bi-Dir 2500, 3-9, 4-11
Motor, Hyd, Gear, Int 08.9 Bi-Dir 2500 (See Breakdowns), 3-7, 3-9
Motor, Hyd, Gear, Int 19.0 Bi-Dir 3000 (See Breakdowns), 2-45
Mount Wldt, Valve, Pinch, Lh, 2-95
Mount Wldt, Valve, Pinch, Rh, 2-89
Muffler, 3.2 8.0w 17.0l 1.9/1.8id, 2-33
Muffler, Vacfan, 4.0id, 2-101

N

Nozzle, 3-51
Nozzle Kit, Spray, Ci [M30], 3-51
Nozzle, Spray [Pressure Washer], 3-53
Nozzle, Spray, Gun, 3-51
Nozzle, Wand, Plstc, 14.0l, 3-49
Nut, 5-11, 5-23, 5-27, 5-31
Nut-Hxslot .75-16 Pltd, 4-10
Nut, Cap, 5-10, 5-23, 5-27
Nut, Cap, Cam [Ku], 5-26
Nut, Coil, F/#8, 4-15, 4-17, 4-19, 4-21
Nut, Coil, Nyl Patch, 4-15, 4-17, 4-19, 4-21
Nut, Flange [Ku], 5-21
Nut, Ftg, Hyd, 0.56-18, 2-119
Nut, Hex [Ku], 5-7, 5-13, 5-28
Nut, Hex, Flng, M5 X 0.80, 2-53
Nut, Hex, Flng, M6 X 1.00, 2-33, 2-39
Nut, Hex, Flng, M8 X 1.25, 2-9, 2-39, 2-77, 2-81, 2-119
Nut, Hex, Jam, .31-24, 2-49
Nut, Hex, Jam, .31-24, Lh, 2-49
Nut, Hex, Jam, .38-24, 2-23
Nut, Hex, Jam, .50-20, 2-67, 3-11
Nut, Hex, Jam, .50-20, Lh, 2-67
Nut, Hex, Jam, M20 X 1.5, 2-17
Nut, Hex, Lock, .25-20, Nl, 2-25, 2-97, 2-101
Nut, Hex, Lock, .25-20, Nl, Ss, 2-51
Nut, Hex, Lock, .31-18, Nl (NA ONLY), 2-15
Nut, Hex, Lock, .31-18, Nl, Thin, 2-15
Nut, Hex, Lock, .31-18, Nl, Thin (CE ONLY), 2-15
Nut, Hex, Lock, .31-24, Nl, Thin, 2-101
Nut, Hex, Lock, .38-16, Nl, Ss, 2-31, 3-11
Nut, Hex, Lock, .38-16, Nl, Thin, 2-51, 2-97, 2-101
Nut, Hex, Lock, .50-13, Nl, Ss, 2-75
Nut, Hex, Lock, .50-13, Nl, Thin, 2-67
Nut, Hex, Lock, .50-20, Nl, Thin, 2-67
Nut, Hex, Lock, .75-10, Nl, 2-45
Nut, Hex, Lock, #08-32, Nl, 2-13
Nut, Hex, Lock, M10 X 1.5, Nl, 2-23, 2-35, 2-37, 2-39, 2-101, 3-45, 3-63
Nut, Hex, Lock, M10 X 1.5, Nl, Ss, 2-53, 2-55, 2-61, 2-71, 2-75
Nut, Hex, Lock, M12 X 1.75, Nl, 2-23, 2-47
Nut, Hex, Lock, M12 X 1.75, Nl, Ss, 2-67, 2-71
Nut, Hex, Lock, M4 X 0.7, Nl, Ss, 2-51
Nut, Hex, Lock, M4 X 0.70, Nl, 2-15, 2-35, 2-53
Nut, Hex, Lock, M4 X 0.70, Nl, Ss, 2-21, 2-77, 2-81, 3-3, 3-27
Nut, Hex, Lock, M5 X 0.80, Nl, 2-15, 2-43, 3-27, 3-47, 3-51
Nut, Hex, Lock, M5 X 0.80, Nl, Ss, 2-91, 3-13, 3-37, 3-39, 3-41, 3-42, 3-43, 3-61
Nut, Hex, Lock, M6 X 1.00, Nl, 2-15, 2-17, 2-19, 2-27, 2-29, 2-37, 2-39, 2-49, 3-47, 3-57, 3-59
Nut, Hex, Lock, M6 X 1.00, Nl, Ss, 2-13, 2-61, 2-71, 2-91, 2-93, 3-47
Nut, Hex, Lock, M8 X 1.25, Nl, 2-25, 2-29, 2-31, 2-35, 2-41, 2-43, 2-49, 2-51, 2-79, 2-83, 2-119, 3-15
Nut, Hex, Lock, M8 X 1.25, Nl, Ss, 2-33, 2-51, 2-55, 2-61, 2-63, 2-65, 2-67, 2-69, 2-71, 2-73, 2-75, 2-77, 2-81, 2-89, 2-93, 2-95, 2-99, 3-7, 3-15
Nut, Hex, Locl, M6 X 1.00, Nl (CE Only), 2-35
Nut, Hex, Sltd, .75-16, 2-63, 2-65
Nut, Hex, Sltd, 1.00-20, 2-47
Nut, Hex, Sltd, 1.12-18, 2-45
Nut, Hex, Sltd, M20 X 2.5, 8, 2-63, 2-65
Nut, Hex, Std, .25-28, 2-51
Nut, Hex, Std, .31-18, 3-45
Nut, Hex, Std, 06-32, 2-85
Nut, Hex, Std, M10 X 1.50, 2-57
Nut, Hex, Std, M12 X 1.75, Ss, 2-79, 2-83, 2-99
Nut, Hex, Std, M16 X 2.00, 2-19
Nut, Hex, Std, M3 X 0.50, 8, 2-57
Nut, Hex, Std, M5 X 0.8, 8, 2-51
Nut, Hex, Std, M6 X 1.00, 8, 3-27
Nut, Hex, Std, M8 X 1.25, 2-9
Nut, Hex, Std, M8 X 1.25, Brs, 2-31
Nut, Hex, Std, M8 X 1.25, Ss, 2-51, 2-79, 2-83
Nut, Hexagon, 5-19
Nut, Low Crown, .50-20, 2-97
Nut, Motor, Hyd, 4-5
Nut, Solenoid, 4-15, 4-17, 4-19, 4-21
Nut, T, M10 X 1.50 X 15.80od X 13.0l, 2-77, 2-81
Nut, T, M8 X 1.25 X 14.50od X 9.5l, 3-7
Nut, Wheel, .50-20 X 60 Angle, 2-45

O

O-Ring, 5-10, 5-19, 5-25
O-Ring [Ku], 5-4, 5-28, 5-33
Ohg Kit, Ci [M20 And T20], 3-45
Oil Shield, Breather, 5-10
Oil, Hyd [El, Iso 100, 01gal], 1-1
Oil, Hyd [El, Iso 100, 05gal], 1-1
Oil, Hyd [El, Iso 32, 01gal], 1-1
Oil, Hyd [El, Iso 32, 05gal], 1-1
Oil, Hyd [El, Iso 68, 01gal], 1-1
Oil, Hyd [El, Iso 68, 05gal], 1-1
Oil, Hydraulic 68 [20l] (CE ONLY), 1-1

P

Pad, Armrest, 4-29
Pad, Pedal, Brake, 3.96l 2.36w 0.75, 2-49
Pad, Tank, Hyd [W/Psa], 2-119, 2-121
Paint, Airdry, Blk, 12oz (Not Europe), 1-1
Paint, Airdry, Gray, 12oz [Enamel] (Not Europe), 1-1
Paint, Airdry, Iron Gray,12oz[Pwdr Coat] (Not Europe), 1-1
Paint, Airdry, Off-White, 12oz (Not Europe), 1-1
Paint, Airdry, Teal, 12oz, Solid (Not Europe), 1-1
Pan, Oil, Dsl, 5-4
Panel Kit, Instmt, Repair [M20/M30], 2-13
Panel Wldt, Dsl W/ Es, Replmt, 2-9
Panel Wldt, Dsl, Replmt, 2-9
Panel Wldt, Dsl, Replmt [W/Fast], 2-9
Panel Wldt, Dsl, Replmt, Ce, W/ Es, 2-9
Panel Wldt, Dsl, Replmt, Ce[M&T20], 2-9
Panel Wldt, Dsl, Replmt, Ce[W/Fast], 2-9
Panel Wldt, Dsl, Replmt, Tj, 2-9
Panel Wldt, Dsl, Replmt, Tj, W/ Es, 2-9
Panel Wldt, Dsl, Replmt, Tj[W/Fast], 2-9
Panel Wldt, Filler, 2-7
Panel, Access, Door, 2-9, 3-47
Panel, Access, Floor, 2-9
Panel, Adj, 2-9
Panel, Instmt, Rh, Dsl, Replmt, 2-13
Panel, Kit, Instmt Replmt [M20/M30 ec-H20], 2-13
Pawl, Str, 2-63, 2-65
Pedal, Brake, Lock, 2-49
Pedal, Propel, 2-50
Pin Kit, Wheel, Ci [M20/T20/M30], 2-7, 2-59, 3-13
Pin Wldt, 3-11
Pin Wldt, Front, 2-73, 3-9
Pin Wldt, Pivot, Hppr, 2-7
Pin, 0.63d 01.8l, 1/M10h, 2cham, 2-75
Pin, 0.87d 01.8l, 1/M6 X 1.0, 1cham,Stl, 2-53
Pin, 30mmd X 215mml, 2-7, 2-59, 3-13
Pin, Arm, Safety, 2-53
Pin, Clamp, 5-25, 5-33
Pin, Clevis, 0.31d X 0.75l, 3-7
Pin, Clevis, 0.31d X 1.00l, 2-49
Pin, Clevis, 0.37d X 0.75l, 2-53
Pin, Clevis, 0.37d X 1.31l, 3-11
Pin, Clevis, 0.37d X 1.50l, 3-11
Pin, Clevis, 0.37d X 1.75l, 2-61, 2-67, 2-79, 2-83, 3-11
Pin, Clevis, 0.37d X 2.00l, 2-71
Pin, Clevis, 0.50 D X 4.50l, 2-50
Pin, Clevis, 0.75d X 2.00l, 2-67
Pin, Clevis, 0.88d X 2.25l, 2-53
Pin, Cotter, .062 X 0.50, 2-49
Pin, Cotter, .094 X 1.00, 2-49, 2-61, 2-67, 2-71, 3-7, 3-11
Pin, Cotter, .125 X 1.00, 2-51, 2-79, 2-83

Pin, Cotter, .125 X 1.25, 2-63, 2-65
Pin, Cotter, .125 X 1.75, 2-47
Pin, Cotter, .125 X 2.00, 2-45
Pin, Cotter, .156 X 1.25, 2-67
Pin, Cotter, .156 X 2.00, 2-59
Pin, Cotter, Hair, 0.31d .058 Wir, 2-15
Pin, Cotter, Hair, 0.38d .072 Wir, 2-67
Pin, Cotter, Hair, 0.62d .120 Wir, 2-53
Pin, Cotter, Hair, 1.00d .178 Wir, 2-7, 2-59, 3-13
Pin, Cotter, Hair, Dbl, 2-7, 3-13
Pin, Dowel [Bn], 4-9
Pin, Dowel [Ku], 5-3
Pin, Dowel, Cyl Block [1pk=4], 2-23
Pin, Dowel, Pump, Hyd, 4-7
Pin, Eng [Ku], 5-3
Pin, Grvd, 0.43d 01.8l [303ss], 2-73, 3-9
Pin, Hitch, .375d X 3.12l, Pl, 3-7, 3-9, 3-63
Pin, Joint, 5-25
Pin, Lift, Drain, 2-93
Pin, Locking, Steering, Tilt, 2-17
Pin, Piston [Ku], 5-17
Pin, Roll, .187d X 1.62l, .187/.192, 2-7, 2-59, 3-13
Pin, Spring [Ku], 5-13, 5-28
Pin, Start, Spring, 5-3
Pin, Straight [Ku], 5-7
Pin, Tappet Guide, 5-25
Pin, Valve, Steering, 4-13
Pipe, Breather, 5-10
Pipe, Clip [Ku], 5-21
Pipe, Drain, 5-19
Pipe, Injection [Ku], 5-21
Pipe, Injector, # 4, 5-21
Pipe, Inlet [Ku], 5-12
Pipe, Oil [Ku], 5-33
Pipe, Oil, Cooler [Ku], 5-33
Pipe, Overflow, 5-21
Pipe, Water [Kubota], 5-8
Pipe, Water Return 1, 5-30
Pipe, Water Return 2, 5-30
Piston [Ku], 5-17
Piston Kit, 4-25
Piston, Pump, Hyd, Gear, 4-5
Pivot Wldt, Brush, Side, 3-11
Plate, 5-25
Plate Assy, Orifice, 0.0105Id, Green, 4-30
Plate Wldt, Hose, Vacuum, 2-97, 2-99
Plate Wldt, Lift, Sqge, 2-71
Plate Wldt, Mtg, 3-27
Plate Wldt, Mtg, Fan, 2-99
Plate Wldt, Retainer, Sqge, 3-9
Plate Wldt, Seat, 2-15
Plate Wldt, Wrap, Brush, 2-67
Plate, Bellcrank, 2-53
Plate, Bellcrank, Hppr, Lock, 2-53
Plate, Bottom, Hppr, 2-61
Plate, Cam, 4-7
Plate, Cntrl, Spd [Ku], 5-28
Plate, Cover, 4-7
Plate, Distance, Pump, Hyd, 4-9
Plate, Element 1, 5-10
Plate, Element 2, 5-10
Plate, Guard, Fan Shrd, Dsl, Replmt [M30], 2-35
Plate, Guard, Fan Shrd, Dsl, Replmt, Ce (CE Only), 2-35
Plate, Guard, Fan Shrd, Dsl, Replmt, Tj (Japan Only), 2-35
Plate, Hook, Latch, [M20], 3-61
Plate, Hsng [FaST], 3-3
Plate, Inlet, 2-101
Plate, Inspection, 3-27
Plate, Label, Soltn Tank (ec-H20 only), 2-86
Plate, Mtg [FaST], 3-19
Plate, Mtg, Latch, 2-85
Plate, Mtg, Light, 2-13
Plate, Mtg, Muffler, Dsl [M30], 2-33
Plate, Mtg, Prop Rod, 2-93
Plate, Mtg, Pump, 3-27, 3-51
Plate, Pin, Clevis, Upper, 2-53
Plate, Retainer, 2-61
Plate, Shield, Heat, Dsl, Replmt [M30], 2-33
Plate, Shield, Heat, Dsl, Replmt, Ce (CE Only), 2-33
Plate, Shield, Heat, Dsl, Replmt, TJ (Japan Only), 2-33
Plate, Skirt, Front, 2-69
Plate, Spacer, Motor, Hyd [En], 4-11
Plate, Sppt, 2-49, 3-29
Plate, Sppt, Tank, 2-93
Plate, Tank, Bottom, 2-93
Plate, Valve, Motor, Hyd, 4-5
Plate, Valve, Pump, Hyd, 4-7
Plate, Wear, Steering Valve, 4-13
Plug, 4-5, 5-30
Plug #10, 4-10
Plug #4, 4-10
Plug Assy [Cl], 4-13
Plug Kit, Drain, Recvy, Ci, 2-93
Plug Orifice, Valve, Hyd, .140, 4-15, 4-17
Plug Wldt, Drive, Brush, 2-63, 2-65
Plug Wldt, Drive, Brush, Sweep, 2-63, 2-65
Plug, Cup, Sealing [Ku], 5-3, 5-5
Plug, Drain, Expandable, 4.75-6.00, 2-93
Plug, Eng [Ku], 5-3
Plug, Gauge, Oil [Ku], 5-4
Plug, Glow [Ku], 5-21
Plug, Hole, Rnd, 0.50h .03-.12, Blk Nyl, 2-13
Plug, Hole, Rnd, 0.88h .03-.12, Blk Nyl, 2-9
Plug, Hole, Rnd, 1.00h .03-.12, Blk Nyl, 2-9
Plug, Hole, Rnd, 1.25h .03-.12, Blk Nyl (NA ONLY), 2-15
Plug, Hole, Rnd, 2.50h .03-.25, Blk Nyl, 2-9
Plug, Hole, Rt, Rocker Switch, .87 X 1.7, 2-13
Plug, Hole, Soltn Tank, Blk Pyu, 2-85
Plug, Hose, Pyu, 2-89, 2-95
Plug, Oil Filler, 5-10
Plug, Orifice, 0.060, Ss [FaST Ii+], 4-30
Plug, Orifice, Valve, Hyd, .030, 4-15, 4-17
Plug, Orifice, Valve, Hyd, .040, 4-15, 4-17, 4-19, 4-21
Plug, Orifice, Valve, Hyd, .046, 4-15, 4-17
Plug, Pump, Hyd, Gear, 4-5
Plug, Restrictor, 3-33
Plunger, 3-49
Plunger, Pump, 5-25
Pop Valve, 4-25
Poppet, Pump, Hyd, Gear, 4-5
Pouch, 3-29
Pully, Fan [Ku], 5-17
Pump Assy, Column, Es, 4-3
Pump Assy, Column, Es (See Breakdowns), 3-5
Pump Kit, Hyd, Rotating [Cessna], 4-7
Pump kit, Mtg, Aux, Ci [M20 & T20], 2-117
Pump, Diaphragm, 4-24
Pump, Detgt, 14vdc, 150ml/Min 20psi, 3-3, 4-23
Pump, Diaphragm (See Breakdowns), 3-51
Pump, Fuel, 2-27
Pump, Hyd, Gear, Ext, 3, 00.85 2500, Cw, 4-9
Pump, Hyd, Gear, Ext, 3, 00.85 2500, CW (See Breakdowns)
(Replaced by 9007143), 2-117
Pump, Hyd, Piston, Var, 1.24 4000, Cw, 4-7
Pump, Hyd, Piston, Var, 1.24 4000, Cw (See Breakdowns), 2-117
Pump, Hyd, Press Washer, 4-25
Pump, Hyd, Press Washer (See Breakdowns), 3-55
Pump, Oil, Cover [Ku], 5-7
Pump, Oil, Eng [Ku], 5-7
Pump, Soltn, 13.7vdc, 65psi [FaST Ii+], 3-19
Pump, Soltn, Ele, 13.7vdc,12/28psi, 3-27
Pump, Water Assy [Ku], 5-8

R

Race Thrust, 4-10
Race, Brg, Pump, Hyd, 4-7
Rack, Control, 5-25
Radiator Kit, Replmt, Ci, 2-35
Radiator, W/ Hyd Cooler [Side X Side], 2-37, 2-39
Rear Recirculation Flap, 1-1
Rear Skirt, 1-1
Receptacle, Lamp [Speaker], 2-7
Relay, 12vdc, 040a, Spdt No, 2-27, 2-43, 2-155, 3-19, 3-27, 3-51, 3-53
Reservoir, Hyd, 10.0gal, Replmt, 2-121
Resistor, Ele, Plug [2.5K , 1W], 2-152
Resistor, Ele, Plug [430 , 2w], 3-36
Retainer, 5-19
Retainer, Boot, Steering Column, 2-17
Retainer, Motor, Hyd, 4-5
Retainer, Skirt, .12, 0.8w X 09.1l, Gray, 2-69
Retainer, Skirt, .12, Lh, 2-69

Retainer, Skirt, .12, Rh, 2-69
Retainer, Skirt, Front, 2-69
Retainer, Spring, 2-71
Retainer, Spring [Ku], 5-13
Retainer, Spring, Valve [Ku], 5-13
Retainer, Sqge, 3-7
Retainer, Sqge, Lh Side, 2-81
Retainer, Sqge, Rh Side, 2-77
Ring [Ku], 5-17
Ring Kit, Sppt, 4-25
Ring, Lock, 4-7
Ring, Motor, Hyd, 4-5
Ring, Mtg, Sqge, .50l, 2-73
Ring, Piston Assy [Ku], 5-17
Ring, Retainer, Steering Valve, 4-13
Ring, Retaining, 4-7
Ring, Retaining, Ext, 0.38d, [E-Ring], 2-73, 2-75, 3-9
Ring, Retaining, Ext, 0.38d, [Selflock], 2-71
Ring, Retaining, Ext, 0.50d, Hd, 2-17
Ring, Retaining, Ext, 0.62d, Hd, 2-75
Ring, Retaining, Ext, 0.98d, [E-Ring], 2-49
Ring, Retaining, Ext, 1.00d, Basic, 2-63, 2-65
Ring, Retaining, Int, 2.00d, 2-53
Ring, Retaining, Pump, Hyd, 4-7
Ring, Snap [Ku], 5-15, 5-26
Ring, Snap, Piston [Ku], 5-17
Rivet, Plstc, .250D X 0.90, 2-17, 3-29, 3-49, 3-53
Rod Assy, Connecting [Ku], 5-17
Rod Wldt, Arm, Safety, 2-53
Rod-End, .25-28rh Fem 0.25b [Teflon], 2-51
Rod-End, 0.50-20lh Fem 0.50-20stud, 2-67
Rod-End, 0.50-20rh Fem 0.50b, 2-67
Rod-End, 0.50-20rh Mal 0.50b, 3-11
Rod, Push, Valve [Ku], 5-15
Rod, Thrd, 2 End, .31-24 7.0l, Pl, 2-49
Rod, Thrd, 2 End, .50-20 04.9l, Rh / Lh, 2-67
Roller, 5-19
Roller, Brg, 2-89, 2-95

S

Screen Wldt, Hppr, 2-55
Screen, Pump, 3-5
Screen, Vacuum, 2-93
Screw, 4-10, 5-25
Screw [Ku], 5-7, 5-13
Screw, Adj, Rocker Arm [Ku], 5-13
Screw, Btn, M6 X 1.0 X 20, 10.9, Blk, 3-47
Screw, Btn, M8 X 1.25 X 16, Ss, 2-89, 2-95
Screw, Btn, M8 X 1.25 X 20, Blk, 2-77, 2-81, 3-61
Screw, Btn, M8 X 1.25 X 25, Ss, 2-67, 3-7
Screw, Cap, 4-7
Screw, Cap, Motor, Hyd, 4-5
Screw, Flt, Soc, .25-20 X 1.00, Al, 2-97, 2-101
Screw, Flt, Soc, .38-16 X 1.50, Al, 2-97
Screw, Flt, Soc, M10 X 1.50 X 25, 10.9, 2-77, 2-81
Screw, Flt, Soc, M8 X 1.25 X 20, Al, Blk, 2-77, 2-81
Screw, Flt, Soc, M8 X 1.25 X 30, Ss, 2-89, 2-95
Screw, Follow, 5-25
Screw, Hex [Ku], 5-4, 5-5, 5-7, 5-9, 5-12, 5-26, 5-31, 5-33
Screw, Hex, .25-10 X 0.75, Fmg/A, Ss, 2-93
Screw, Hex, .25-20 X 0.75, Nl, 2-101
Screw, Hex, .25-20 X 1.00, 5, 3-9
Screw, Hex, .25-20 X 1.00, G5, 3-7
Screw, Hex, .25-20 X 1.75, Ss, 2-51
Screw, Hex, .25-20 X 2.25, Ss, 2-51
Screw, Hex, .31-18 X 0.75, Sems, 2-31
Screw, Hex, .31-24 X 0.75, Nl, 2-51
Screw, Hex, .38-16 X 0.75, Nl, 2-63, 2-65, 3-7, 3-9
Screw, Hex, .38-16 X 0.88, G5, 3-63
Screw, Hex, .38-16 X 1.00, 5, 2-51
Screw, Hex, .38-16 X 1.25, G5, 2-51, 2-117
Screw, Hex, .38-16 X 1.50, Ss, 3-11
Screw, Hex, .38-16 X 2.00, Ss, 2-51
Screw, Hex, .38-16 X 3.00, G5, 2-31
Screw, Hex, .50-13 X 1.50, G5, 2-67
Screw, Hex, .50-13 X 3.00, 18-8, Ss, 2-75
Screw, Hex, .75-10 X 3.25, G5, 2-45
Screw, Hex, .75-10 X 4.00, 5, 2-45
Screw, Hex, 10-16 X 0.62, Fmg/Ab, Pl, 3-51, 3-53
Screw, Hex, Case, Brg, Main [Ku], 5-9
Screw, Hex, Cshft [Ku], 5-17
Screw, Hex, Head, Cyl [Ku], 5-5
Screw, Hex, M07-1.00 X 20.0, 8.8, 2-21
Screw, Hex, M10 X 1.25 X 25, 8.8, 2-23, 2-37, 2-39
Screw, Hex, M10 X 1.25 X 35, 8.8, 2-31
Screw, Hex, M10 X 1.5 X 16, 8.8, 2-17
Screw, Hex, M10 X 1.5 X 25, Ss, 2-79, 2-83
Screw, Hex, M10 X 1.5 X 30, 8.8, 3-45
Screw, Hex, M10 X 1.50 X 110, 8.8, 2-23
Screw, Hex, M10 X 1.50 X 20, Ss, 2-57, 2-61
Screw, Hex, M10 X 1.50 X 25, 8.8, 2-7, 2-9, 2-23, 2-31, 2-35, 2-37, 2-39
Screw, Hex, M10 X 1.50 X 30, Ss, 2-7, 2-61, 2-71, 3-13
Screw, Hex, M10 X 1.50 X 35, 10.9, 3-63
Screw, Hex, M10 X 1.50 X 35, 8.8, 2-23, 2-29, 3-63
Screw, Hex, M10 X 1.50 X 40, 8.8, 2-39, 2-101
Screw, Hex, M10 X 1.50 X 45, 8.8, 2-37
Screw, Hex, M10 X 1.50 X 50, Ss, 3-55
Screw, Hex, M10 X 1.50 X 60, 8.8, 2-57
Screw, Hex, M10 X 1.50 X 80, 8.8, 2-53, 3-63
Screw, Hex, M12 X 1.75 X 30, 8.8, 3-11
Screw, Hex, M12 X 1.75 X 40, 8.8, 2-47, 2-67
Screw, Hex, M12 X 1.75 X 55, Ss, 2-79, 2-83
Screw, Hex, M12 X 1.75 X 60, 8.8, 2-23, 2-67
Screw, Hex, M16 X 2.00 X 90, 8.8, 2-19
Screw, Hex, M4 X 0.70 X 12, 8.8, 2-53, 3-27
Screw, Hex, M4 X 0.70 X 50, Ss, 4-27
Screw, Hex, M5 X 0.8 X 20, 8.8, 2-51
Screw, Hex, M5 X 0.80 X 10, Fmg, 2-67, 3-27
Screw, Hex, M5 X 0.80 X 12, Ss, 3-13, 3-63
Screw, Hex, M5 X 0.80 X 16, Fmg, 3-49
Screw, Hex, M5 X 0.80 X 16, Ss, 3-47
Screw, Hex, M5 X 0.80 X 20, 8.8, 2-53, 3-27
Screw, Hex, M6 X 1.0 X 16, Fmg, 2-51
Screw, Hex, M6 X 1.0 X 20, 9.8, Sems, 2-13, 2-17
Screw, Hex, M6 X 1.0 X 20, Ss, 2-61
Screw, Hex, M6 X 1.0 X 25, Ss, 2-79, 2-83
Screw, Hex, M6 X 1.00 X 10, Fmg, 3-3
Screw, Hex, M6 X 1.00 X 12, Ss, 2-57, 3-27, 3-61
Screw, Hex, M6 X 1.00 X 16, 8.8, 2-19, 2-27, 2-37, 2-49, 2-53
Screw, Hex, M6 X 1.00 X 16, 8.8 (CE Only), 2-35, 2-37
Screw, Hex, M6 X 1.00 X 16, Fmg, 2-7, 2-35, 2-53, 2-69, 3-19
Screw, Hex, M6 X 1.00 X 16, Ss, 3-19
Screw, Hex, M6 X 1.00 X 20, 8.8, 2-27
Screw, Hex, M6 X 1.00 X 20, 9.8, Sems, 2-39, 3-27, 3-47
Screw, Hex, M6 X 1.00 X 20, Ss, 2-33, 2-79, 2-83, 2-91, 2-93
Screw, Hex, M6 X 1.00 X 25, 8.8, 2-15
Screw, Hex, M6 X 1.00 X 25, 9.8 Sems, 2-27, 2-29, 2-35, 2-37, 2-39
Screw, Hex, M6 X 1.00 X 25, Fmg, 2-119
Screw, Hex, M6 X 1.00 X 35, 8.8, 2-31
Screw, Hex, M6 X 1.00 X 35, Ss, 3-27
Screw, Hex, M6 X 1.00 X 40, 8.8, 2-27
Screw, Hex, M6 X 1.00 X 55, Fl, Ss, 2-93
Screw, Hex, M6 X 1.00 X 60, 8.8, 2-49, 3-57, 3-59
Screw, Hex, M8 X 1.25 X 110, Ss, 2-73, 3-15
Screw, Hex, M8 X 1.25 X 130, 8.8, 2-63, 2-65
Screw, Hex, M8 X 1.25 X 16, 8.8, 2-23
Screw, Hex, M8 X 1.25 X 16, Ss, 2-63, 2-65, 2-89, 2-95, 3-55
Screw, Hex, M8 X 1.25 X 20, 8.8, 2-9, 2-15, 2-19, 2-21, 2-27, 2-29, 2-33, 2-35, 2-37, 2-41, 2-45
Screw, Hex, M8 X 1.25 X 20, Ss, 2-9, 2-57, 2-63, 2-65, 2-67, 2-69, 2-79, 2-83, 2-85, 2-89, 2-95, 2-99, 2-123, 3-5, 3-27, 3-29, 3-37, 3-39, 3-41, 3-51

Screw, Hex, M8 X 1.25 X 20, Ss, Sems, 2-15, 2-21, 2-39, 2-86, 2-93, 2-97, 3-19
Screw, Hex, M8 X 1.25 X 25, 8.8, 2-31, 2-35, 2-89, 2-95, 2-99
Screw, Hex, M8 X 1.25 X 25, 9.8, Sems, 2-7, 2-9, 2-21, 2-37, 2-39, 2-43, 2-49, 2-59, 2-85, 2-97, 2-101, 2-119, 3-55
Screw, Hex, M8 X 1.25 X 25, Fmg, 2-69, 3-3, 3-19
Screw, Hex, M8 X 1.25 X 25, Ss, 2-23, 2-51, 2-55, 2-61, 2-63, 2-65, 2-69, 2-93, 2-99, 3-7, 3-11, 3-15, 3-55
Screw, Hex, M8 X 1.25 X 30, 8.8, 2-23, 2-31, 2-89, 2-95
Screw, Hex, M8 X 1.25 X 30, 9.8, Sems, 2-25, 2-119, 2-121, 3-59
Screw, Hex, M8 X 1.25 X 30, Ss, 2-69, 2-71, 2-99
Screw, Hex, M8 X 1.25 X 35, 8.8, 2-49, 2-89, 2-95
Screw, Hex, M8 X 1.25 X 35, 9.8, Sems, 2-37, 2-39
Screw, Hex, M8 X 1.25 X 35, Fl, Ss, 2-71, 2-99
Screw, Hex, M8 X 1.25 X 40, Ss, Nl, 2-51
Screw, Hex, M8 X 1.25 X 45, Ss, 2-33, 2-75
Screw, Hex, M8 X 1.25 X 50, 8.8, 2-51
Screw, Hex, M8 X 1.25 X 50, Fl, Ss, 2-69
Screw, Hex, M8 X 1.25 X 60, 8.8, 2-71
Screw, Hex, M8 X 1.25 X 60, 8.8, Fl, 2-9
Screw, Hex, M8 X 1.25 X 60, Fl, 2-67
Screw, Hex, M8 X 1.25 X 70, 8.8, 2-49
Screw, Hex, M8 X 1.25 X 90, 8.8, 2-75
Screw, Motor, Hyd [En], 4-11
Screw, Mtg [Ehpr98], 4-17, 4-21
Screw, Pan, 12-16 X 0.50, F/ Plstc (ec-H20 only), 2-86
Screw, Pan, M4 X 0.7 X 35, Ss, 2-51
Screw, Pan, M8 X 1.25 X 25, Blk, 2-9, 2-13, 2-15, 2-17, 2-21
Screw, Pan, Phl, 06-20 X 0.50, Fmg/Ab, 2-15, 2-21
Screw, Pan, Phl, 06-32 X 0.38, G1, 2-85
Screw, Pan, Phl, 12-16 X 0.50, F/ Plstc, 2-85, 2-93, 3-64
Screw, Pan, Phl, M3 X 0.50 X 20, 4.8, 2-57
Screw, Pan, Phl, M4 X 0.70 X 10, Ss, 2-77, 2-81
Screw, Pan, Phl, M4 X 0.70 X 16, 4.8, 2-35
Screw, Pan, Phl, M4 X 0.70 X 16, Ss, 2-21, 3-3
Screw, Pan, Phl, M4 X 0.70 X 20, 4.8, 2-15, 2-59
Screw, Pan, Phl, M4 X 0.70 X 20, Ss, 2-59, 3-27
Screw, Pan, Phl, M5 X 0.80 X 12, Ss, 2-15, 2-57, 2-91, 3-19, 3-61
Screw, Pan, Phl, M5 X 0.80 X 16, 4.8, 2-15
Screw, Pan, Phl, M5 X 0.80 X 16, Tcut,Ss, 4-27
Screw, Pan, Phl, M5 X 0.80 X 20, Ss, 3-23, 3-33, 3-37, 3-39, 3-41, 3-42, 3-43
Screw, Pan, Phl, M5 X 0.80 X 45, 4.8, 3-51
Screw, Pan, Phl, M6 X 1.00 X 16, Ss, 2-71
Screw, Pan, Phl, M6 X 1.00 X 20, 4.8, 2-7
Screw, Pan, Phl, M6 X 1.00 X 35, Ss, 2-5
Screw, Rod, Connecting [Ku], 5-17
Screw, Set [Ku], 5-15, 5-26
Screw, Set, Soc, 10-24 X 0.25, Nl, 2-57
Screw, Soc, .25-20 X 0.75, Al, 2-17
Screw, Soc, .50-13 X 1.50, Al, 2-45
Screw, Soc, M16 X 2.0 X 50, 12.9, 2-45
Screw, Soc, M6 X 1.00 X 16, 12.9, 2-23, 2-31
Screw, Soc, M8 X 1.25 X 25, 12.9, 2-79, 2-83
Screw, Soc, M8 X 1.25 X 35, 12.9, 2-79, 2-83
Screw, Valve, Steering, 4-13
Screw, W / Washer, 5-21
Screw, With Washer, 5-10
Seal Kit [Buna], 4-25
Seal Kit [Vitron], 4-25
Seal Kit, Cartridge, 2-123, 4-15, 4-17, 4-19, 4-21
Seal Kit, Motor [Cl], 3-9, 4-11
Seal Kit, Motor, Hyd, Gear [Barns], 2-97
Seal Kit, Oil, 4-25
Seal Kit, Pump, Hyd, 4-7, 4-9
Seal Kit, Steering [Cl], 4-13
Seal Kit, Valve [Ehpr98], 4-17, 4-21
Seal Replmt Kit, 4-10
Seal, Afmkt, Bulb, 90, 0.50D, 02 Ft, 2-15
Seal, Afmkt, Bulb, 90, 0.75d F/11ga 01ft, 2-9
Seal, Afmkt, Bulb, 90, 0.75d F/11ga 08ft, 2-9
Seal, Afmkt, Bulb, Str, .50D F/11Ga 08Ft, 2-119
Seal, Afmkt, Bulb, Str, 1.0D F/11Ga 08Ft, 2-19
Seal, Bulb, Str, .50hi .50w 058.0l, Adh, 2-85
Seal, Bulb, Str, 0.38h .75w Adh, 52 L, 2-39
Seal, Door, Dump, 2-61
Seal, Drive, Rear, Grease Cav, 2-45
Seal, Foam, 0.50, 2-21
Seal, Foam, 1.18, 2-21
Seal, Heat, Nozzle [Ku], 5-21
Seal, Mechanical Assy [Ku], 5-8
Seal, Oil [Ku], 5-9, 5-28
Seal, Oil, Eng [Ku], 5-7
Seal, Org [Ku], 5-4
Seal, Org, .069 X 03.06id, 2-117
Seal, Org, .072 X 00.35id #04, 4-15, 4-17
Seal, Org, .078 X 00.47id #06, 4-15, 4-17
Seal, Org, .078 X 00.47id 06, 4-19, 4-21
Seal, Panl, Instmt, 2-9
Seal, Rbr, Clsd, .13, .38w 72.0l, Adh, 2-39
Seal, Rbr, Clsd, 0.13, Instmt Panl, 2-13
Seal, Shaft, Drain Plug, 2-93
Seal, Shroud, Front, 2-19
Seal, Stem, Valve [Ku], 5-13
Seal, Ure, 0.38, 0.75w 13.2l Adh, 2-101
Seal, Ure, 0.38, 0.75w 33.0l Adh, 2-101
Seal, Wire, 14/16ga [Wp / Mp280 Sealed], 4-24
Seat, 4-29
Seat (See Breakdowns), 2-15
Seat, Spring Lower, 5-25
Seat, Spring Upper, 5-25
Seat, Suspension, W/1 Arm And Belt, 2-15
Seatbelt, 4-29
Seatbelt, Retractable [Deluxe Seat], 2-15
Send-Unit, Fuel [2007], 2-25
Send-Unit, Water, Temp,04npt[113oh/195d], 2-121
Sensor, Hyd, 3000 Psi (Replaced by 9007155), 2-123
Sensor, Level, Liq, 14vdc 01a .62-11, 2-85, 3-55
Sensor, Spd / Dir, 6-30vdc, 2-51
Shaft, 2-47
Shaft Wldt, Brake, 2-49
Shaft Wldt, Pedal, Brake, 2-49
Shaft, Brush, Idler, 2-63, 2-65
Shaft, Govnr, 5-26
Shaft, Govnr [Ku], 5-26
Shaft, Idler, Gear [Ku], 5-15
Shaft, Lever, Spd [Ku], 5-28
Shaft, Motor, Hyd, 4-5
Shaft, Output, 4-10
Shaft, Output, Motor, Hyd [En], 4-11
Shaft, Pump, 4-7
Shaft, Pump, Water, 4-3
Shaft, Rocker, Arm [Ku], 5-13
Shaker Wldt, 2-57
Sheave, Fan, 2-31
Shim, 5-25
Shim Kit, 4-7
Shim, Injection Pump 0.20 mm, 5-23
Shim, Injection Pump 0.25 mm, 5-23
Shim, Injection Pump 0.30 mm, 5-23
Shim, Washer, 0.88d 0.51b .020, 2-97
Shim, Washer, 0.88d 0.51b .060, 2-97
Shock Absorber, 2.3 Strk, 2-51
Shoe Set, Brake [1 Set=1pkg=2 Shoes], 2-47
Shoe, Plstc, Sqge, 14.0, 3-49
Shrd Wldt,Fan,Dsl, Replmt [Ce], 2-37
Shrd Wldt,Fan,Dsl, Replmt [M20/M30/T20], 2-37
Shrd Wldt,Fan,Dsl, Replmt [Tj], 2-37
Shroud Wldt, Fan, Dsl, 2-37
Shroud Wldt, Fan, Eng, Dsl, 2-39
Shroud, Eng, 2-21
Shroud, Fan, 2-39
Shroud, Front, 2-19
Shroud, Rh, 2-15
Side Door Inner Skirt, 1-1
Side Door Outer Skirt, 1-1
Skirt, Debris, Dsl, Radiator, 2-35, 2-37, 2-39
Skirt, Neo, .06, 03.35w 12.90l, 04/ Hole, 2-69

Skirt, Neo, .06, 06.38w 48.00l, 06/ Hole, 2-69
Skirt, Neo, .06, 06.85w 27.95l, 08/ Hole, 2-77, 2-81
Skirt, Neo, .06, 08.40w 58.50l, 12/ Hole, 2-69
Skirt, Neo, .06, 12.00w 53.50l, 10/ Hole, 2-69
Skirt, Neo, .13, 08.25w 13.98l, 02/ Hole, 2-69
Skirt, Neo, .18, 10.37w 27.95l, 12/ H&S, 2-77, 2-81
Skirt, Rbr, .37, 04.50w 48.00l, 06/ Hole, 2-69
Sleeve, 0.31b 0.50d 0.3l, Ss, 2-79, 2-83, 2-93
Sleeve, 0.49b 0.68d 1.2l [304ss], 2-79, 2-83, 3-55
Sleeve, Control, 5-25
Sleeve, Dashpo, Pump, Hyd, Gear, 4-5
Sleeve, Govnr [Ku], 5-26
Sleeve, Nyl, #37 05.0l, 2-45
Sleeve, Nyl, 2.38id 25.0l, 2-45
Sleeve, P/M, 0.31b 0.50d 0.3l [430ss], 2-89, 2-95
Sleeve, P/M, 0.31b 0.50d 0.7l [430ss], 2-73, 2-89, 2-95
Sleeve, P/M, 0.31b 0.50d 0.9l [430ss], 2-33
Sleeve, P/M, 0.34b 0.63d 0.6l, Bnz, 2-75
Sleeve, P/M, 0.34b 0.63d 1.2l, Bnz, 2-73
Sleeve, P/M, 0.37b 0.50d 0.6l [430ss], 3-11
Sleeve, P/M, 0.47b 0.75d 0.5l [430ss], 2-67
Sleeve, Pump, Water, 4-3
Sleeve, Rbr, 3.50b 3.58d 1.8l, 3-5
Solenoid, #10, 12vdc, 4-15, 4-17, 4-19, 4-21
Solenoid, #8, 12vdc, 4-15, 4-17, 4-19, 4-21
Solenoid, 12v, Valve, Hyd [Cec], 4-22
Spacer, 3-7, 3-9
Spacer Plate, 4-10
Spacer, Coil, #8, 4-15, 4-17
Spacer, Fan, 2-31
Spacer, Fan, Dsl [M20/T20], 2-31
Spacer, Hub, Keyed, 3-7, 3-9
Spacer, Pad, Rbr, 2-71
Spacer, Plstc, Nyl, 2-15
Spacer, Rnd, .38b .88d .38l (CE ONLY), 2-15
Spacer, Sqge, Side Brush, Rbr, 3-9
Spacer, Valve, Steering, 4-13
Spool, Pilot, Dual, Hyd, 4-15, 4-17
Spool, Pilot, Hyd, 4-15, 4-17, 4-19, 4-21
Spring, 2-47, 4-5, 5-19
Spring Kit, Scu [Cl], 4-13
Spring, Brush, 5-19
Spring, Cmpr, 0.72od .06wir 02.3l, 2-17
Spring, Cmpr, 0.90od .04wir 02.0l, 2-73
Spring, Cmpr, Relief [Ku], 5-7
Spring, Cmpr, Rocker [Ku], 5-13
Spring, Delivery Valve, 5-25
Spring, Dsl, 1.00od 0.50id 1.70l, 2-75
Spring, Ext, Govnr [Ku], 5-29
Spring, Extn, 0.75od X 0.09wir, 2.5l, 2-79, 2-83
Spring, Extn, 0.75od X 0.12wir, 4.3l, 2-51
Spring, Extn, 0.75od 0.09wir 02.5l, 2-53
Spring, Extn, 0.88od 0.14wir 09.0l, 2-71
Spring, Extn, 2.00od 0.25wir 07.5l, 2-67
Spring, Flat, .08, 4.50w X 07.0l, 2-71
Spring, Flat, Retainer, Angled Screen, 2-55
Spring, Motor, Hyd, 4-5
Spring, Plunger, 5-25
Spring, Start [Ku], 5-29
Spring, Tors [Ku], 5-28
Spring, Tors, 0.75id .06wir 02.8coil, 2-49
Spring, Tors, 1.13id .12wir 2.3coil, Rh, 2-49
Spring, Valve [Ku], 5-13
Spring, Wir, 0.08d, Parking Brake, 2-49
Spring, Wir, 0.16d, Brush Retaining, 2-5
Squeegee Assy, Sba, Linatex, 3-7
Squeegee Assy, Sba, Ure, 3-7
Squeegee Kit, Rear, Replmt [M30], 2-73
Squeegee Wldt, Rear, 2-73
Starter, 12vdc [Kubota] (See Engine Breakdown), 2-23
Steer-Control, Hyd05, 06.1 2030, 4-13
Steer-Control, Hyd05, 06.1 2030 (See Breakdowns), 2-17
Stem, Valve, Hyd, 4-15, 4-17, 4-19, 4-21
Stem, Valve, Hyd [4w2p], 4-15, 4-17, 4-19, 4-21
Stop, Rotation, 2-75
Stopper, Cam [Ku], 5-15
Stopper, Fuel [Ku], 5-26
Strainer, Hyd, 025gpm 100mesh 03psi, 1-1, 2-121
Strainer, Soltn, 20mesh, Cyl, 3.5d 09.5l, 3-5
Strap, Door, Dump, 2-61
Strap, Mtg, Motor, .12 4.00w, 2-57
Strap, Rbr, Tie-Down, 19.0l, 2/ Hook, 2-43
Strap, Retaining, Hose, 2-89, 2-95
Strap, Sppt, 2-51
Strap, Static, W/Grommet, .19 1.1w 25.0l, 2-69
Strap, Tank, Gas, 2-25
Strip, Flap, Recirculation, 2-69
Strip, Mtg, Seal, 2-19
Strip, Non Slip, 0.50w 06.0l, 2-73
Strip, Rbr, 0.06 01.00w 04.0l, 2-57
Strip, Rbr, 0.06 03.54w 03.5l [Neo/60], 3-27
Strip, Rbr, 0.06 04.00w 05.0l [Neo/60], 2-57
Stud, 5-11, 5-23
Stud [Ku], 5-7, 5-11, 5-13, 5-28
Stud, .31-18 2.75l M8 X 1.25, Ss, 2-73
Stud, Ball, .39d .31-16, Gasspring, 2-15
Stud, Wheel, .50-20 X 1.50l, 0.370th, 2-45
Switch Assy, Press, 13.0, 17.5l Tube, 2-93
Switch Assy, Press, Dbl, 17.5l, 3-5
Switch Assy, Press, Dbl, 26.2l, 3-5
Switch Kit, Pump, Repair,, 4-24
Switch, Ignition [Ku], 2-13
Switch, Press, 0006psi Dpdt, 2-23
Switch, Press, 0008psi Spdt, 2-59
Switch, Press, 50 Psi, Pm02, 3-29
Switch, Press, Adj [4-16 In Wtr], 2-59
Switch, Press, Hyd, 18-24Psi, Spst, No (CE Only), 2-121
Switch, Rocker, Dpdt, Mom / Off / Mom, 2-13
Switch, Rocker, Dpdt, On / None / On, 3-51
Switch, Rocker, Dpdt, On / Off / On, 2-13
Switch, Rocker, Prgrsv, 3-53
Switch, Rocker, Spst, Mom, 3-27
Switch, Seat, 4-29
Switch, Seat, No [Delta 6440-04], 2-15
Switch, Snap, 15a No, Rlr, 2-53
Switch, Temp [160f], 2-57
Switch, Temp, Sealed, Nc, 2-57
Switch, Temp, Water, 06pmt 235deg [Fd] (Replaced by 9005789), 2-23
Switch, Thermostat, Water, 2-23

T

Taillight, 12vdc, 2-59
Tank, Coolant, 03.30w 4.7hi 04.7l,1liter, 2-35, 2-41
Tank, Coolant, 03.6W 04.1HI 05.5L,1Liter, 2-41
Tank, Detgt, Trimmed, 3-5
Tank, Fuel, 11.2Gal, Dsl, Replmt, CE[08], 2-25
Tank, Fuel, 11.2Gal, Dsl, Replmt, NA[08], 2-25
Tank, Fuel, 11.2Gal, Dsl, Replmt, TJ[08], 2-25
Tank, Recvy, 2-93
Tank, Soltn [M30], 2-85
Tape, Warning, Left, Blk/Yel [33Mtr] (CE Only), 2-162
Tape, Warning, Rh, Blk/Yel [33Mtr] (CE Only), 2-162
Tappet [Ku], 5-15
Terminal, Bullet, Mal, .157d, 12ga, 3-39, 3-41, 3-42, 3-43
Terminal, Fem, Mp280, Sealed, 18-16ga, 4-24
Thermostat, 180deg, 1.7d, 5-30
Thrust Bearing, 4-10
Tie, Cable, 6.0l, 1.25d Max, 3-33, 3-42, 3-43
Tie, Cable, Nyl, 07.3l .19w 1.8 Max D, 2-13, 2-27, 2-35, 2-37, 2-39, 2-41, 2-45, 2-65, 3-29, 3-42, 3-43, 3-53
Tie, Cable, Nyl, 14.5l .30w 4.0 Max D, 4-27
Tie, Cable, Nyl, 15.3l . W 4.5 Max D, 2-57, 3-23, 3-29
Timer, 12vdc, 1a [10s Sgl Shot], 2-27
Tire Assy, Solid, 18.0 X 5.0, Idler (Standard), 2-47

Tire Assy, Solid, 18.0 X 5.0,Hi Traction (Option), 2-47
Tire Assy, Solid, 18.0X5.0, Non- Marking (Option), 2-47
Tire, Drive, Scrbr, Non- Skid, 18.0X6.0, 2-45
Tire, Drive, Scrbr, Pu, Grey, 18.0X6.0 (Optional Polyurethane), 2-45
Tire, Idler, Scrbr, Pu, Grey, 18.0X5.0 (Polyurethane), 2-47
Tower Wldt, Lift, Lh, Replmt [M30], 2-7
Tower Wldt, Lift, Lh, Replmt, Ce (CE Only), 2-7
Tower Wldt, Lift, Lh, Replmt, TJ (Japan Only), 2-7
Tower Wldt, Lift, Rh, Replmt [M30], 2-7
Tower Wldt, Lift, Rh, Replmt, CE (CE Only), 2-7
Tower Wldt, Lift, Rh, Replmt, TJ (Japan Only), 2-7
Track Assy, Slide, 4-29
Transport Kit, Ci [M20/M30}, 3-61
Tray Wldt, Drip, Dsl, 2-27
Tray Wldt, Drip, Fuel, 2-27
Tray Wldt, Fuel, 2-25
Tray, Perma- Filter, 2-57
Tread, Non- Skid, 01.9w 08.0l, 2-7
Tread, Non- Skid, 02.2w 11.5l, 3-13
Tread, Non- Skid, 03.0w 11.6l, 2-7, 2-9, 2-50
Tube Assy, Plug, Drain, 2-93
Tube Kit, Hyd, Case Drain [M30], 2-65
Tube Kit, Tank, Recvy, Replmt, 2-95
Tube Kit, Tank, Soltn, Replmt, 2-89
Tube Wldt, Arm, Safety, 2-53
Tube Wldt, Exhaust, Dsl [M30], 2-33
Tube Wldt, Leg, Ohg, Lh, Pntd, 3-45
Tube Wldt, Leg, Ohg, Rh, Pntd, 3-45
Tube Wldt, Plug, Drain, 2-93
Tube Wldt, Torque, 2-67
Tube, 0.32id 0.50od 00.4l, Ss, 2-89, 2-95
Tube, 0.77id 1.75od 00.7l, Stl, Pntd, 2-45
Tube, 00.38d 00.26b 00.3l Stl Plt, 2-51
Tube, 00.50d 00.38b 00.6l Stl, 2-51
Tube, 2.90Id 3.00OD 02.4L, Ss, 2-89, 2-95
Tube, Acrylic, Clr, 3.25id 3.50od 01.0l, 2-95
Tube, Distribution, Water, 45.0l, 2-91
Tube, Exhaust, 1.9 D, 2-33
Tube, Hyd, 06, Sqge Lift, 2-119
Tube, Hyd, 08 Jf08/Jf08, 2-63
Tube, Hyd, Brush Return, W/ Cd [M30], 2-65
Tube, Hyd, Main Return, 2-119
Tube, Hyd, Main Return [G/Lp Mit2013], 2-119
Tube, Hyd, Rear Sqge [M20], 2-119
Tube, Injector, Pipe #2 [Ku], 5-21
Tube, Injector, Pipe #32 [Ku], 5-21
Tube, Oil, 5-33
Tube, Pin [Ku], 5-3
Tube, Radiator, Lower, Dsl [M30], 2-35, 2-41
Tube, Rnd, 1.75d 0.77b 01.1l, Stl, Pntd, 2-45
Tube, Seat, Valve, Oil [Ku], 5-7
Tube, Vacuum, 2-59
Tube, Vinyl, Pump, Water, 4-3
Tube, Wand, Vacuum, Metal, 3-49
Tubing Connctr.Kit, Gorman Pmp, 4-23
Turbo Assy, Charger [Ku], 5-31

U

Upper Hsg Kit, Pump, Repair,, 4-24
Urethane Front Squeegee, 1-1
Urethane Rear Squeegee, 1-1
Urethane Side Brush Squeegee, 1-1
Urethane Side Squeegee, 1-1

V

Valve Assy [Proportional], 4-17, 4-21
Valve Assy, Relief [Cl], 4-13
Valve Assy, Water, Solenoid , 12vdc, 2-91
Valve Assy, Water, Solenoid, 12vdc, 3-13, 3-33
Valve Kit, 4-25
Valve Kit, Poppet, Gorman Rupp, 4-23
Valve Stem, N.O.Valve, Hyd, 4-22
Valve, Check, 4-15, 4-17, 4-19, 4-21
Valve, Check, 0002psi [FaST Ii+], 4-30
Valve, Check, 0005psi [FaST Ii+], 4-30
Valve, Check, 0005psi Bm06/Bm08, 3-19
Valve, Check, 0005psi Pm04/Bm06, 3-29
Valve, Check, 2gpm .5psi Bm08/Bm08, 3-33
Valve, Check, Pump, Water, 4-3
Valve, Cntrl, Hyd, Solenoid, 03/16gpm, 4-19, 4-21
Valve, Cntrl, Hyd, Solenoid, 03/16gpm (See Breakdowns), 3-15
Valve, Cntrl, Hyd, Solenoid, 12vdc 10gpm, 4-17
Valve, Cntrl, Hyd, Solenoid, 12vdc 10gpm (See Breakdowns), 2-123
Valve, Cntrl, Solenoid, 4-15, 4-17
Valve, Delivery, 5-25
Valve, Exhaust [Ku], 5-13
Valve, Hyd Cartridge 10no/- 0, 4-22
Valve, Hyd, Check, 5000psi Jm08/Om08, 3-15
Valve, Hyd, Press Washer, 3-57, 3-59
Valve, Hyd, Solenoid, 12vdc, 4-15
Valve, Hyd, Solenoid, 12vdc (See Breakdowns), 2-123
Valve, Intake [Ku], 5-13
Valve, Motor, Hyd, 4-5
Valve, Needle, 3-55
Valve, Relief, 4-15, 4-17, 4-19, 4-21
Valve, Relief, 1100 Psi, 2-123
Valve, Relief, 3000 Psi, 4-7
Valve, Relief, 4000 Psi, 4-7
Valve, Shutoff, 3-51
Valve, Solenoid, 12vdc, Water Flow, 3-23
Valve, Stem, No, 4-15, 4-17, 4-19, 4-21
Valve, Vent, Air, Float Type, 3-29
Valve, Water, Solenoid, 12vdc 6.0mm Pf04, 3-19
Valve, Water, Solenoid, 12vdc Pf08/Pf08, 3-3
Video, Oprtr, Dvd [W/ Checklist M30], 3-65

W

Wand Kit, Vacuum, Sqge, Ci [M30], 3-49
Wand, Clean- Out, 3-51
Wand, Str, Ss, 28l, 3-53
Washer [Ku], 5-26
Washer, Belleville, .31, 2-51
Washer, Collar, Gear [Ku], 5-15
Washer, Flat [Ku], 5-13, 5-28
Washer, Flat, .781b 1.63od .16, Stl, Blk, 2-45
Washer, Flat, #10 Ss, 2-51
Washer, Flat, 0.25 Std, 2-51
Washer, Flat, 0.25, Fendr, 2-35, 2-37, 2-39, 2-69, 2-101
Washer, Flat, 0.25, Sae, 2-15, 2-17, 2-25, 2-31, 2-33, 2-35, 2-51, 2-53, 2-101, 3-27, 3-47, 3-57, 3-59
Washer, Flat, 0.25, Std, 2-19, 2-27, 2-31, 2-37, 2-39, 2-49
Washer, Flat, 0.25, Std (CE Only), 2-37
Washer, Flat, 0.25, Std (CE Only), 2-35
Washer, Flat, 0.27b 0.69d .05, Ss, 2-5, 2-57, 2-61, 2-69, 2-91, 2-93, 3-19, 3-27, 3-47, 3-61
Washer, Flat, 0.31 Sae, 2-51, 2-79, 2-83
Washer, Flat, 0.31 Std, 2-51
Washer, Flat, 0.31, Sae, 2-9, 2-15, 2-21, 2-89, 2-95
Washer, Flat, 0.31, Ss, 2-79, 2-83
Washer, Flat, 0.31, Std, 2-9, 2-15, 2-17, 2-19, 2-27, 2-29, 2-31, 2-33, 2-35, 2-37, 2-41, 2-45, 2-49, 2-63, 2-65, 2-67, 2-69, 2-89, 2-93, 2-95, 2-119, 3-11, 3-15, 3-45, 3-61
Washer, Flat, 0.32b 1.00d .12, Ss, 2-9, 2-15, 2-19, 2-21, 2-55, 2-61, 2-86, 2-89, 2-95, 2-99, 2-123, 3-5, 3-27, 3-29, 3-37, 3-39, 3-41, 3-51
Washer, Flat, 0.38 Sae, 2-51
Washer, Flat, 0.38 Std, 2-51, 3-9, 3-45
Washer, Flat, 0.38, Sae, 2-23, 2-29, 2-31, 2-35, 2-37, 2-39, 2-75, 2-101, 2-117
Washer, Flat, 0.38, Std, 2-7, 2-15, 2-37, 2-39, 3-7, 3-63
Washer, Flat, 0.38b 0.88d .08, Ss, 2-23, 2-33, 2-57, 2-61, 2-69, 2-71, 2-73, 2-75, 2-89, 2-95, 2-99, 3-7, 3-11, 3-55
Washer, Flat, 0.38b 1.25d .12, Neo, 2-55, 2-61
Washer, Flat, 0.40b 1.12d .12, Ss, 2-35, 2-37, 2-39, 2-53, 2-57, 2-61, 2-75, 2-97, 2-101, 3-45

Washer, Flat, 0.41b 1.25d .12, Pye, 2-15
Washer, Flat, 0.44b 1.00d .08, Ss, 2-7, 2-71, 3-13, 3-55
Washer, Flat, 0.50, Sae, 2-17, 2-35, 2-47, 3-11, 3-63
Washer, Flat, 0.50, Std, 2-23
Washer, Flat, 0.53b 1.88d .12, Stl, Pl, 2-9, 2-23, 2-71, 2-73
Washer, Flat, 0.56b 1.38d .11, Ss, 2-67, 2-71, 2-79, 2-83
Washer, Flat, 0.62, Sae, 2-19
Washer, Flat, 0.66b 1.00d .12, Rbr, 3-3, 3-51
Washer, Flat, 0.69b 1.19d .06, Stl, Pl, 2-75
Washer, Flat, 0.75 Sae, 2-45
Washer, Flat, 0.78b 1.75d .18, Ss, 2-93
Washer, Flat, 0.79b 1.18d .06, Nyl, 2-89, 2-95
Washer, Flat, 0.81b 1.06d .06, Stl, 2-35, 2-37, 2-39
Washer, Flat, 06, 2-15, 2-35, 2-57, 3-49
Washer, Flat, 08, 3-27
Washer, Flat, 08, Ss, 4-27
Washer, Flat, 1.00, Sae, 2-47
Washer, Flat, 1.10b 1.50d .12, Stl, Pl, 2-31
Washer, Flat, 1.15b 1.75d .08, Stl, 2-13
Washer, Flat, 1.26b 1.88d .13, Stl, 3-13
Washer, flat, 1.26B 1.88D .13, Stl, Pl, 2-7, 2-59
Washer, Flat, 1.39b 2.12d .13, Stl, 2-45
Washer, Flat, 10, 2-15, 2-43, 2-53, 3-27, 3-37, 3-39, 3-41, 3-42, 3-43, 3-51
Washer, Flat, 10, Ss, 3-3, 3-19, 3-47, 3-51, 3-53, 3-63
Washer, Flat, 2.16b 3.50d .16, Felt, 2-45
Washer, Flat, Belleville, .25, 2-79, 2-83
Washer, Flat, Belleville, .31, 2-89, 2-95
Washer, Flat, Belleville, .38, 2-53, 2-71, 2-79, 2-83
Washer, Flat, Belleville, .50, 2-79, 2-83, 2-99
Washer, Flat, Belleville, M10, 2-55
Washer, Flat, Pump, Hyd, 4-7
Washer, Lock, Int-Ext, 0.31, 2-69
Washer, Lock, Int, 0.25, 3-27
Washer, Lock, Int, 0.25, Ss, 3-55
Washer, Lock, Int, 0.31, 2-33
Washer, Lock, Int, 0.38, 2-31
Washer, Lock, Int, 06, 2-57
Washer, Lock, Int, 08, Ss, 2-59, 4-27
Washer, Lock, Split [Ku,04512-50080], 5-31
Washer, Lock, Split [Ku], 5-7, 5-28
Washer, Pump, Hyd [En], 4-7
Washer, Rbr, 4-3
Washer, Shaft, Rocker [Ku], 5-13
Washer, Shld, Nyl [8-32], 2-13
Washer, Spring, 5-23
Washer, Thrust [Ku], 5-26
Washer, Thrust, 0.34b 1.50d .06, 2-89, 2-95
Washer, Thrust, 0.61b 1.25d .06, Fgl, 2-79, 2-83
Washer, Thrust, 0.61b 1.25d .06, Fgl, 2-75, 2-77, 2-81, 3-7
Washer, Thrust, 1.00b 1.75d 0.13, Fbr, 3-11
Weight, Comp, Govnr [Ku], 5-26
Weight, Eccentric, 2-57
Wheel, 03.0d 1.38w 0.50b, 1-1, 2-75
Wheel, 04.0d 0.89w 0.64b, 2-73
Wheel, 06.0d 2.00w 1.19b, Gray Rbr, 2-7, 2-59, 3-13
Wheel, Steering, 14.3d 0.81b 36tooth, 2-17
Wire, Tie [W/.25" Fir Tree Clip], 2-7