T600 EE

Walk-Behind Floor Scrubber

Parts Manual

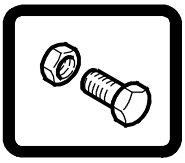

(S/N 10000000- 20000000)

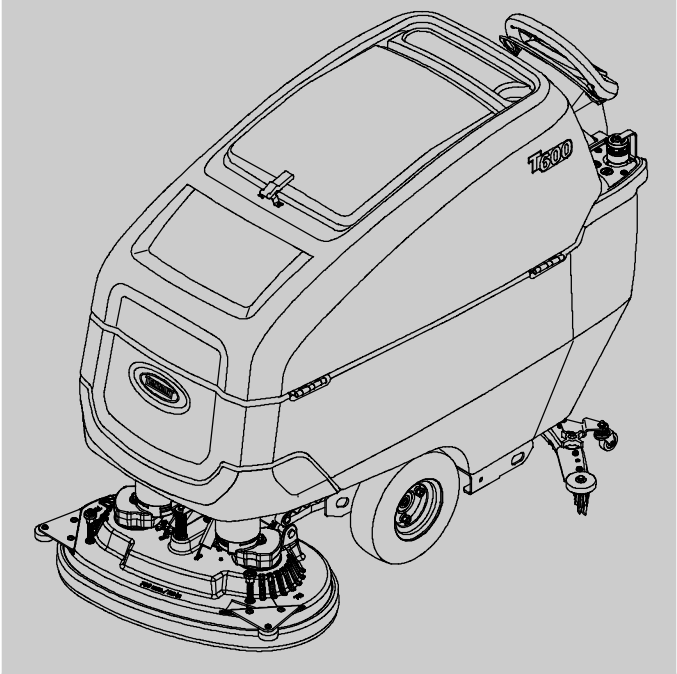

***Hygenic*® Fully Cleanable Recovery Tank**
Tennant*True*® Parts
***Insta-Fit*™ Adapter**

North America / International

For the latest Parts manuals and other language Operator manuals, visit:

www.tennantco.com/manual

4193696
Rev. 09 (11-2025)

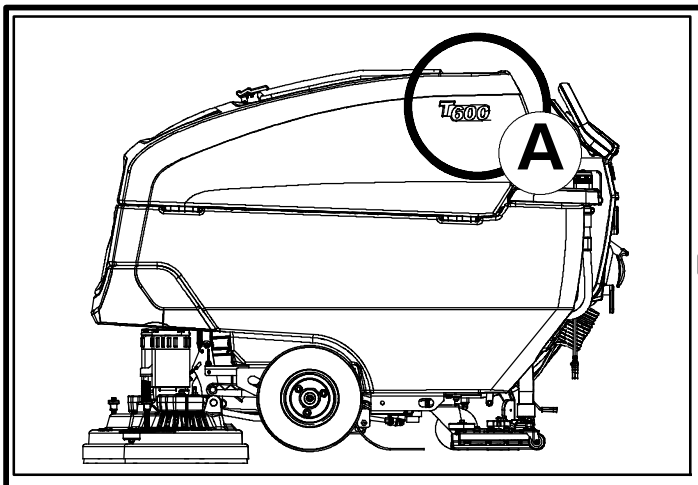

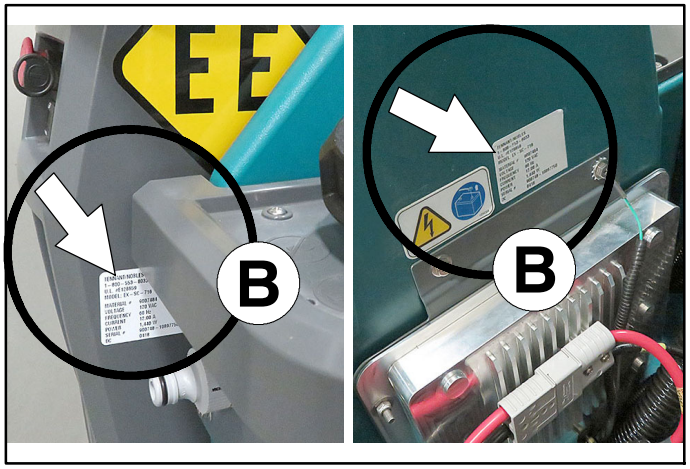

Ref	Part No.	Serial Number	Description	Qty.
1	82681	(000000-)	Bracket Wldt, Lpg Mount	1
▽ 2	63810	(000000-)	Latch Assy, Lpg Tank Mtg, W/Nut	4
▲ 3	51839	(000000-)	Nut Adjustable, Lpg Tank Mtg	2
4	49263	(000000-)	Tie, Cable	3
	82556	(000000- 001039)	Bracket, Vaporizer	1
	54930	(000000-)	Vaporizer, LPG	1

D

C

HOW TO ORDER PARTS - See diagram above

Only use TENNANT Company supplied or equivalent parts. Parts and supplies may be ordered online, by phone, by fax or by mail.

Follow the steps below to ensure prompt delivery.

1. **(A)** Identify the machine model.
2. **(B)** Identify the machine serial number from the data label.
3. **(C)** Ensure the proper serial number is used from the parts list.
4. Identify the part number and quantity. Do not order by page or reference numbers.
5. Provide your name, company name, customer ID number, billing and shipping address, phone number and purchase order number.
6. Provide detail shipping instructions.

(D) ▽ - identifies an assembly
▲ - identifies parts included in assembly

Please fill out at time of installation for future reference.

Model No. - _____

Serial No. - _____

Machine Options - _____

Sales Rep. - _____

Sales Rep. phone no. - _____

Customer ID Number - _____

Installation Date - _____

Tennant Company
10400 Clean Street
Eden Prairie, MN 55344-2650 USA
Phone: (800) 553-8033
www.tennantco.com

Specifications and parts are subject to change without notice.

Copyright © 2018 - 2025 TENNANT Company, Printed in U.S.A.

ES

CÓMO SOLICITAR PIEZAS - Consulte el diagrama anterior.

Utilice sólo las piezas suministradas por TENNANT Company o piezas equivalentes. Puede solicitar las piezas a través de internet, por teléfono, por fax o por correo.

Siga los siguientes pasos para que la entrega sea rápida.

1. **(A)** Indique el modelo de máquina.
2. **(B)** Indique el número de serie de la etiqueta de datos.
3. **(C)** Asegúrese de que indica el número de serie correcto de la lista de piezas.
4. Indique la cantidad y el número de la pieza.
   No realice el pedidoindicando el número de página o el de referencia.
5. Incluya su nombre, el nombre de la empresa, el ID de cliente, las direcciones de envío y facturación, el número de teléfono y el número del pedido de compra.
6. Facilite instrucciones de envío.

(D) ▽ - identifica un conjunto
▲ - identifica piezas de un conjunto

Rellene estos datos cuando realice la instalación para utilizarlos como referencia en el futuro.

Nº modelo - _____

Nº serie - _____

Opciones de la máquina - _____

Vendedor - _____

Nº teléfono vendedor - _____

Nº cliente - _____

Fecha de instalación - _____

FR

COMMENT COMMANDER DES PIÈCES DÉTACHÉES - Voir le schéma ci- dessus.

Utilisez uniquement des pièces fournies par la société TENNANT ou équivalentes. Les pièces et fournitures peuvent être commandées en ligne, par téléphone, fax, ou par courrier.

Suivez les étapes ci- dessous pour assurer une livraison rapide.

1. **(A)** Identifiez le modèle de la machine.
2. **(B)** Identifiez le numéro de série de la machine, à partir de l'étiquette signalétique.
3. **(C)** Assurez- vous que le numéro de série correct est utilisé à partir de la liste de pièces détachées.
4. Identifiez le numéro de pièce et la quantité. Ne commandez pas par page ou numéros de référence.
5. Fournissez votre nom, le nom de votre société, votre numéro d'identification de client, l'adresse de facturation et d'expédition, le numéro de téléphone et le numéro du bon de commande.
6. Fournissez des instructions d'expédition détaillées.

(D) ▽ - identifie un assemblage
▲ - identifie les pièces composant l'assemblage

A remplir au moment de l'installation à titre de référence.

Nº du modèle - _____

Nº de série - _____

Options de la machine - _____

Agent commercial - _____

Nº tél. de l'agent commercial - _____

Numéro d'identification client - _____

Date d'installation - _____

STANDARD PARTS

GENERAL RECOMMENDED MAINTENANCE ITEMS 7
REPLACEMENT BRUSHES AND PAD DRIVER DISK 10
SCRUB HEAD GROUP, DISK 800MM / 32IN . . . 12
RECOVERY TANK GROUP 14
RECOVERY TANK COVER GROUP 16
RECOVERY TANK FILTER AND HOSE GROUP, PINCH TWIST CAP 18
SOLUTION TANK GROUP, AUTO- FILL 20
ELECTRICAL PANEL GROUP 22
CIRCUIT BREAKER PANEL GROUP 24
FRAME AND DRIVE GROUP, WITHOUT PARK LOCK 26
FRAME AND DRIVE GROUP, WITH PARK LOCK 28
HEAD LIFT GROUP, DISK 30
LOWER CONSOLE GROUP, OFF- BOARD CHARGER 32
CONSOLE HANDLE GROUP, PROPEL 34
CONSOLE PANEL, PRO- MEMBRANE, WITHOUT TELEMETRY 36
SQUEEGEE LIFT GROUP 38
SQUEEGEE ASSEMBLY, 700MM / 28IN (Intended for 800MM Scrub Head Size) (New Style 9018627) 40
SQUEEGEE ASSEMBLY, 700MM / 28IN (Intended for 800MM Scrub Head Size) (Upgraded Style 9018086 - Replaced By 9018627) 42
SQUEEGEE ASSEMBLY, 700MM / 28IN (Intended for 800MM Scrub Head Size) (Original Style 9015302 - Replaced By 9018627) 44
STANDARD SOLUTION GROUP 46
BATTERY GROUP, WET 240AH 48
SHROUD GROUP, DISK 50
STANDARD LABEL GROUP 51
HARNESS GROUP 52

OPTIONS

MANUAL BATTERY WATERING SYSTEM (S/N 11011759 -) 54
HYDROLINK® MANUAL BATTERY WATERING KIT (S/N 10000000 - 11011758) 56
NARROW AISLE SQUEEGEE ASSEMBLY, 650MM / 26IN (New Style 9018626) 58
NARROW AISLE SQUEEGEE ASSEMBLY, 650MM / 26IN (Upgraded Style 9018098 - Replaced By 9018626) 60
NARROW AISLE SQUEEGEE ASSEMBLY, 650MM / 26IN (Original Style 9015301 - Replaced By 9018626) 62
RECOVERY TANK HOSE GROUP, VALVE 64
TALL WET FLOOR SIGN HANGER KIT 66
TRANSPORT KIT 67
DOCUMENTATION GROUP (ONLINE ONLY) . . . 68

GENERAL RECOMMENDED MAINTENANCE ITEMS

	Part No.	Serial Number	Description	Qty.
	1246596	(10000000- 20000000)	Brush Assy, Disk, Scb, 16.0d, Pyp	2
	1246598	(10000000- 20000000)	Brush Assy, Disk, Scb, 16.0d, Hd Pyp	2
	1246595	(10000000- 20000000)	Brush Assy, Disk, Scb, 16.0d, Nyl	2
	1246597	(10000000- 20000000)	Brush Assy, Disk, Scb, 16.0d, Sab	2
	1243685	(10000000- 20000000)	Pad, Stripping, 16.0d, Brn [1pick=1ctn]	2
	1243354	(10000000- 20000000)	Pad, Scb, 16.0d, Blu [1pick=1ctn]	2
	1243355	(10000000- 20000000)	Pad, Buff, 16.0d, Red [1pick=1ctn]	2
	1243356	(10000000- 20000000)	Pad, Polish, 16.0d, White [1pick=1ctn]	2
	1243659	(10000000- 20000000)	Pad, Strip, 16.0d Blk[Hi Prod1pick=1ctn]	2
	1243668	(10000000- 20000000)	Pad, Surf Prep, 16.0d Maroon[1pick=1ctn]	2
	1240390	(10000000- 20000000)	Pad, Polish, 16.0d, Yel [1pick=1ctn]	2
∇	9015737	(10000000- 20000000)	Blade Kit, 700mm, Linatex/Linard (Standard - Intended for 800mm Scrub Head Size)	1
▲	1221572	(10000000- 20000000)	Blade, Sqge, Rear, 1204l, Linatex[700mm] (Standard)	1
▲	1232679	(10000000- 20000000)	Blade, Sqge, Front, 1148l Linard[700mm] (Standard)	1
∇	9015738	(10000000- 20000000)	Blade Kit, 700mm, Urethane (Option - Intended for 800mm Scrub Head Size)	1
▲	1228904	(10000000- 20000000)	Blade, Sqge, Rear, 1204l,Urethane[700mm] (Option)	1
▲	1228906	(10000000- 20000000)	Blade, Sqge, Front,1148l Urethane[700mm] (Option)	1
∇	9015736	(10000000- 20000000)	Blade Kit, 700mm, Gum (Option - Intended for 800mm Scrub Head Size)	1
▲	1228905	(10000000- 20000000)	Blade, Sqge, Rear, 1204l, Gum[700mm] (Option)	1
▲	1228907	(10000000- 20000000)	Blade, Sqge, Front, 1148l Gum[700mm] (Option)	1
∇	9015734	(10000000- 20000000)	Blade Kit, 650mm, Linatex/Linard (Standard - Intended for Narrow Aisle)	1
▲	1221585	(10000000- 20000000)	Blade, Sqge, Rear, 1166l, Linatex[650mm] (Standard)	1
▲	1232680	(10000000- 20000000)	Blade, Sqge, Front, 1072l Linard[650mm] (Standard)	1
∇	9015735	(10000000- 20000000)	Blade Kit, 650mm, Urethane (Option - Intended for Narrow Aisle)	1
▲	1228909	(10000000- 20000000)	Blade, Sqge, Rear, 1136l,Urethane[650mm] (Option)	1
▲	1228915	(10000000- 20000000)	Blade, Sqge, Front,1072l,Urethane[650mm] (Option)	1
∇	9015733	(10000000- 20000000)	Blade Kit, 650mm, Gum (Option - Intended for Narrow Aisle)	1
▲	1228910	(10000000- 20000000)	Blade, Sqge, Rear, 1136l, Gum[650mm] (Option)	1
▲	1228919	(10000000- 20000000)	Blade, Sqge, Front, 1072l Gum[650mm] (Option)	1
	4211412	(10000000- 20000000)	Disk, Polish, 14.0d,1000grit[Diamabrush]	2
	4211413	(10000000- 20000000)	Disk, Polish, 14.0d,2000grit[Diamabrush]	2
	4211420	(10000000- 20000000)	Disk, Polish, 16.0d,1000grit[Diamabrush]	2
	4211421	(10000000- 20000000)	Disk, Polish, 16.0d,2000grit[Diamabrush]	2

GENERAL RECOMMENDED MAINTENANCE ITEMS

	Part No.	Serial Number	Description	Qty.
	1063882	(10000000- 20000000)	Motor, Ele, 36vdc 0330rpm 0.60hp	2
	9017893	(10000000- 20000000)	Fan Kit, Vacuum, Ci [T600ee]	1
	609531	(10000000- 20000000)	Float, Shutoff, Vacuum, 1- Ball, 1.50d	1
	1211537	(10000000- 20000000)	Filter, In- Line [80 Mesh, Fine, White]	1
	222403	(10000000- 20000000)	Wheel, 02.0d 0.88w 0.50b	2
	1232326	(10000000- 20000000)	Bumper, Head, 80cm, Skirt, Im	1
	1049046	(10000000- 20000000)	Caster, Swivel, 5.0d 2.0w, 4hole, Gray	2
	1244374	(AUG2020- 20000000)	Tire Assy, Foam, Blk, 4.10/3.5- 06 3.5bc/3bolt (Standard - Non Marking)	2
	1231001	(10940148- JUL2020)	Tire Assy, Foam, 4.10/3.5- 06 3.5bc/3bolt (Standard - Non Marking - Replaced by 1244374)	2
	1236073	(10000000- 10940147)	Tire Assy, Solid, 4.1/3.5- 06 3.5bc/3bolt (Standard) (Replaced By 1244374 - Order Qty2)	2
	1244372	(10944148- 20000000)	Tire Assy, Pneu, Blk, 4.10/3.5- 06 3.5bc (Option)	2
	1059450	(10000000- 10944147)	Tire Assy, Pneu, Blk, 4.10/3.5- 06 3.5bc (Option) (Replaced By 1244372)	2
∇	1243083	(10000000- 20000000)	Vr, Motor Kit, Transaxle [T600/T600e]	1
▲	1072555	(10000000- 20000000)	Vr, Brush Kit, Motor 1072554/1243083	1
∇	9017499	(10000000- 20000000)	Parts Kit, Maint, Afmkt 700 [T600/E] (Intended for 800MM Scrub Head Size)	1
▲	1230171	(10000000- 20000000)	Tray, Debris [T600]	1
▲	9017507	(10000000- 20000000)	Hose Kit, Drain, Pvc, Ci [T600/T600e]	1
▲	9017505	(10000000- 20000000)	Hose Kit, Recvy, Pvc, Ci [T600/T600e]	1
▲	609531	(10000000- 20000000)	Float, Shutoff, Vacuum, 1- Ball, 1.50d	1
▲	1221572	(10000000- 20000000)	Blade, Sqge, Rear, 1204l, Linatex[700mm]	1
▲	1232679	(10000000- 20000000)	Blade, Sqge, Front, 1148l Linard[700mm]	1
▲	1211537	(10000000- 20000000)	Filter, In- Line [80 Mesh, Fine, White]	1

REPLACEMENT BRUSHES AND PAD DRIVER DISK

358147

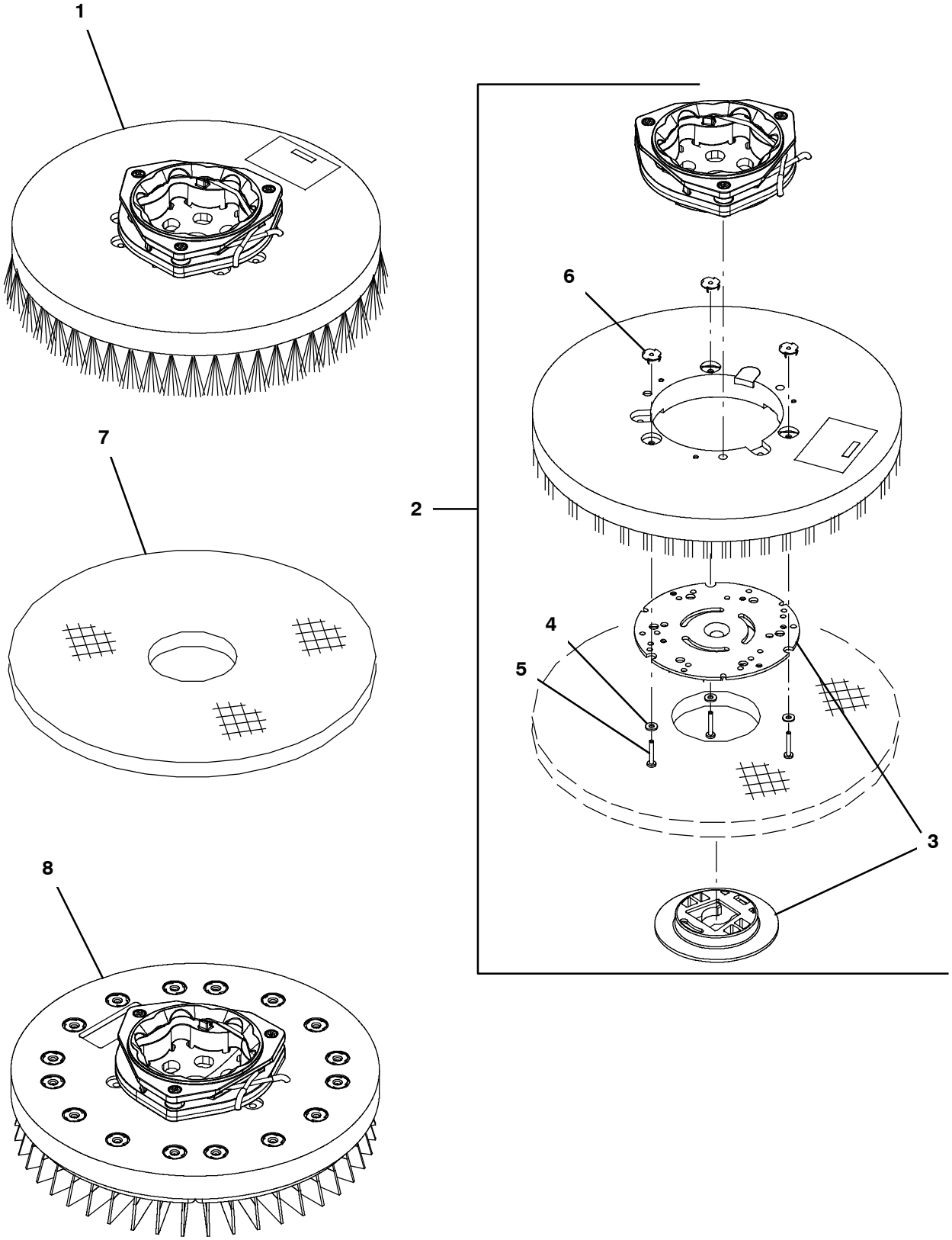

REPLACEMENT BRUSHES AND PAD DRIVER DISK

	Ref.	Part No.	Serial Number	Description	Qty.
	1	1246596	(10000000- 20000000)	Brush Assy, Disk, Scb, 16.0d, Pyp	2
	1	1246598	(10000000- 20000000)	Brush Assy, Disk, Scb, 16.0d, Hd Pyp	2
	1	1246595	(10000000- 20000000)	Brush Assy, Disk, Scb, 16.0d, Nyl	2
	1	1246597	(10000000- 20000000)	Brush Assy, Disk, Scb, 16.0d, Sab	2
∇	2	1246594	(10000000- 20000000)	Driver Assy, Pad, 16.0d, Brush	2
▲	3	370095	(10000000- 20000000)	Device, Centering, Clip On, Tl [Gf Pp]	1
▲	4	41579	(10000000- 20000000)	Washer, Flat, 08, Ss	3
▲	5	04403	(10000000- 20000000)	Screw, Pan, Phl, M4 X 0.70 X 25, Nl, Ss	3
▲	6	10908	(10000000- 20000000)	Nut, T, M4 X 0.70	3
	7	1243685	(10000000- 20000000)	Pad, Stripping, 16.0d, Brn [1pick=1ctn]	2
	7	1243354	(10000000- 20000000)	Pad, Scb, 16.0d, Blu [1pick=1ctn]	2
	7	1243355	(10000000- 20000000)	Pad, Buff, 16.0d, Red [1pick=1ctn]	2
	7	1243356	(10000000- 20000000)	Pad, Polish, 16.0d, White [1pick=1ctn]	2
	7	1243659	(10000000- 20000000)	Pad, Strip, 16.0d Blk[Hi Prod1pick=1ctn]	2
	7	1243668	(10000000- 20000000)	Pad, Surf Prep, 16.0d Maroon[1pick=1ctn]	2
	7	1240390	(10000000- 20000000)	Pad, Polish, 16.0d, Yel [1pick=1ctn]	2
∇	8	4211412	(10000000- 20000000)	Disk, Polish, 14.0d,1000grit[Diamabrush]	2
▲		8005762	(10000000- 20000000)	Vr, Blade, Disk, 1000grit [Db] Set Of 11	4
∇	8	4211413	(10000000- 20000000)	Disk, Polish, 14.0d,2000grit[Diamabrush]	2
▲		8046642	(10000000- 20000000)	Vr, Blade, Disk, 2000grit [Db] Set Of 11	4
∇	8	4211420	(10000000- 20000000)	Disk, Polish, 16.0d,1000grit[Diamabrush]	2
▲		8005762	(10000000- 20000000)	Vr, Blade, Disk, 1000grit [Db] Set Of 11	4
∇	8	4211421	(10000000- 20000000)	Disk, Polish, 16.0d,2000grit[Diamabrush]	2
▲		8046642	(10000000- 20000000)	Vr, Blade, Disk, 2000grit [Db] Set Of 11	4

∇ ASSEMBLY

▲ INCLUDED IN ASSEMBLY

SCRUB HEAD GROUP, DISK 800MM / 32IN

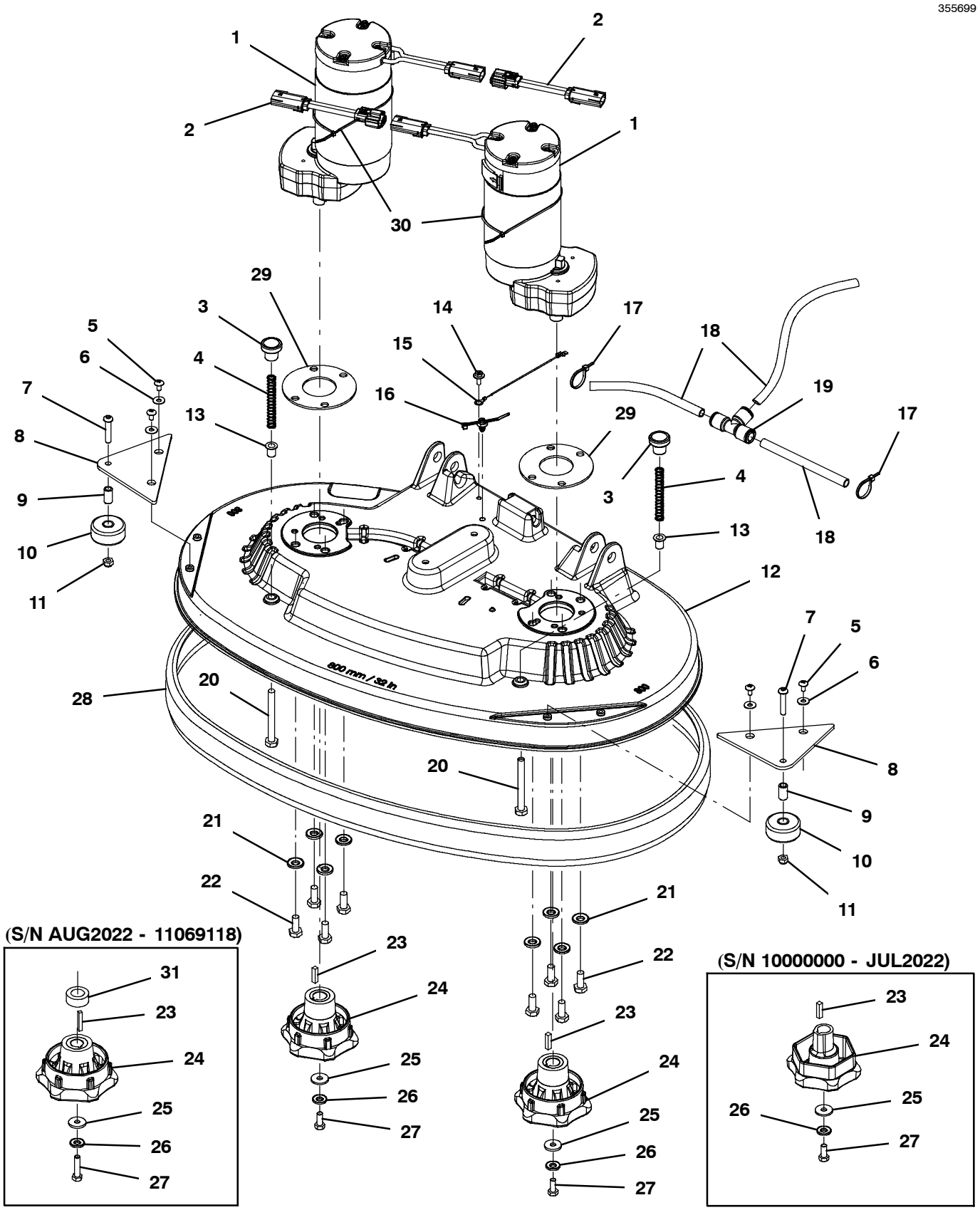

SCRUB HEAD GROUP, DISK 800MM / 32IN

	Ref.	Part No.	Serial Number	Description	Qty.
	1	1063882	(10000000- 20000000)	Motor, Ele, 36vdc 0330rpm 0.60hp	2
	2	1075585	(10000000- 20000000)	Harness, Ele [Motor Rev., Molex Mx150l]	2
	3	1222988	(10000000- 20000000)	Knob, Rnd, 31.0d 27.0l M10, Plstc	2
	4	626081	(10000000- 20000000)	Spring, Cmpr, 0.48od .04wir 03.5l	2
	5	1227865	(10000000- 20000000)	Screw, Trs, M6 X 1.0 X 12, Phl, Ss, Nl	4
	6	01684	(10000000- 20000000)	Washer, Flat, 0.27b 0.69d .05, Ss	4
	7	397826	(10000000- 20000000)	Screw, Btn, M8 X 1.25 X 40, Ss	2
	8	1227709	(10000000- 20000000)	Bracket, Roller, Wall	2
	9	222496	(10000000- 20000000)	Sleeve, P/M, 0.32b 0.50d 0.9l [430ss]	2
	10	222403	(10000000- 20000000)	Wheel, 02.0d 0.88w 0.50b	2
	11	08713	(10000000- 20000000)	Nut, Hex, Lock, M8 X 1.25, Nl, Ss	2
∇	12	9018823	(10000000- 20000000)	Housing, Disc, 80cm, Afmkt [T600, Na,Ce] (With Label)	1
▲	13	1247152	(10000000- 20000000)	Bushing, Flng, 10mmb 12mmd 17mml	2
	14	1034731	(10000000- 20000000)	Screw, Hex, M6 X 1.00 X 16, Sems, Ss	1
	15	1074344	(10000000- 20000000)	Harness, Ele [Ring With .250m Tail]	1
	16	1210807	(10000000- 20000000)	Wire, Tie [W/.25” Fir Tree Clip]	1
	17	130773	(10000000- 20000000)	Tie, Cable, Nyl, 11.0l, .14w, 3.0 Max. D	2
	18	9014145	(10000000- 20000000)	Hose, Afmkt, Pe, .375id .50od, 05ft	1
	19	1212858	(10000000- 20000000)	Fitting, Plstc, Tee, Qf08/Qf08/Qf08	1
	20	09746	(10000000- 20000000)	Screw, Hex, M10 X 1.50 X 90, Ss	2
	21	41187	(10000000- 20000000)	Washer, Flat, Belleville, .38	8
	22	09028	(10000000- 20000000)	Screw, Hex, M10 X 1.50 X 25, Ss	8
	23	00928	(11069306- 20000000)	Key, Sq, 0.25 X 0.25, 1.00l	2
	23	00930	(AUG2022- 11069305)	Key, Sq, 0.25 X 0.25, 1.50l	2
	23	00928	(10000000- JUL2022)	Key, Sq, 0.25 X 0.25, 1.00l	2
	24	1258315	(11069306- 20000000)	Hub, Drive, Brush, Disk, 0.75b [6t]	2
	24	1071636	(AUG2022- 11069305)	Hub, Drive, Brush, Disk, 0.75b [6t] (Replaced By 1258315)	2
	24	1240229	(10000000- JUL2022)	Hub, Drive, Brush, Disk (Replaced By 1258315)	2
	25	1017218	(10000000- 20000000)	Washer, Flat, 0.32b 1.00d .12, Ss	2
	26	41186	(10000000- 20000000)	Washer, Flat, Belleville, .31	2
	27	12273	(11069306- 20000000)	Screw, Hex, M8 X 1.25 X 20, Nl, Ss	2
	27	59658	(AUG2022- 11069305)	Screw, Hex, M8 X 1.25 X 35, Nl, Ss	2
	27	12273	(10000000- JUL2022)	Screw, Hex, M8 X 1.25 X 20, Nl, Ss	2
	28	1232326	(10000000- 20000000)	Bumper, Head, 80cm, Skirt, Im	1
	29	1238822	(10000000- 20000000)	Spacer, Rbr, Motor	2
	30	130644	(10000000- 20000000)	Tie, Cable, Nyl, 17.5l .19w	2
	31	1258303	(AUG2022- 11069305)	Spacer, Hub, Drive, Disk	2

RECOVERY TANK GROUP

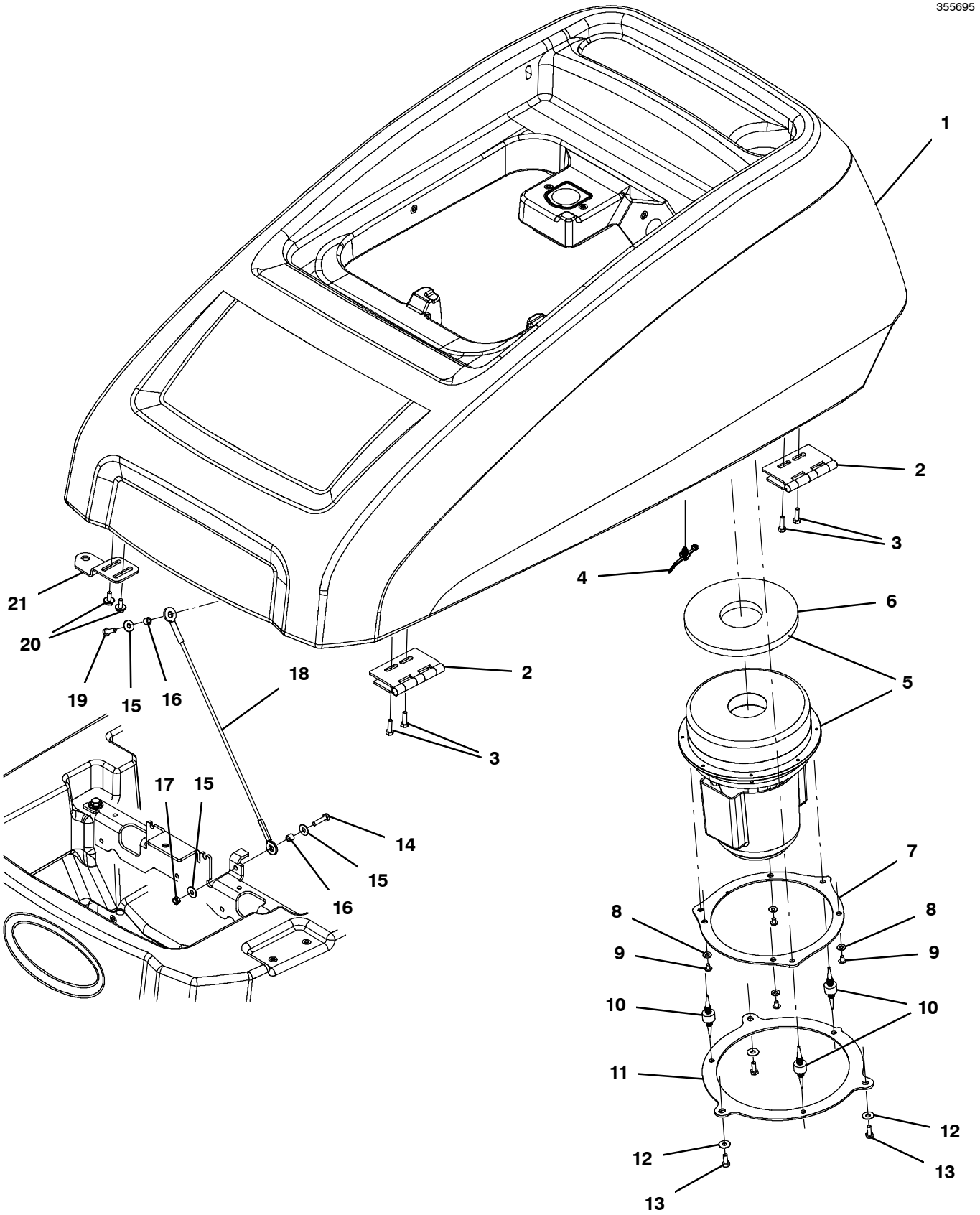

RECOVERY TANK GROUP

	Ref.	Part No.	Serial Number	Description	Qty.
	1	9016812	(10000000- 20000000)	Tank, Recvy, W/Labels, Afmkt [T600, Na]	1
	2	1217669	(10000000- 20000000)	Hinge Assy, 7.0 Pin, 11 Ga, 100l X 105w	2
	3	1034731	(10000000- 20000000)	Screw, Hex, M6 X 1.00 X 16, Sems, Ss	4
	4	1210807	(10000000- 20000000)	Wire, Tie [W/.25” Fir Tree Clip]	2
∇	5	9017893	(10000000- 20000000)	Fan Kit, Vacuum, Ci [T600ee]	1
▲	6	1233703	(10000000- 20000000)	Gasket, .50, 2.56id, 6.89od, Adh [Epdm]	1
	7	1233702	(10000000- 20000000)	Plate, Mount, Vac, Top [T600ee]	1
	8	01683	(10000000- 20000000)	Washer, Flat, 10, Ss	4
	9	140892	(10000000- 20000000)	Screw, Rnd, Phl, 10- 24 X 0.50, Ss	4
	10	1062016	(10000000- 20000000)	Isolator, Vib, .75d	3
	11	1233701	(10000000- 20000000)	Plate, Mount, Vac, Bottom [T600ee]	1
	12	01684	(10000000- 20000000)	Washer, Flat, 0.27b 0.69d .05, Ss	3
	13	11329	(10000000- 20000000)	Screw, Hex, M6 X 1.00 X 16, Nl, Ss	3
	14	06944	(10000000- 20000000)	Screw, Hex, M6 X 1.00 X 25, 8.8	1
	15	01684	(10000000- 20000000)	Washer, Flat, 0.27b 0.69d .05, Ss	3
	16	140154	(10000000- 20000000)	Sleeve, P/M, 0.25b 0.38d 0.3l, Pl	2
	17	08712	(10000000- 20000000)	Nut, Hex, Lock, M6 X 1.00, Nl, Ss	1
	18	1230075	(10000000- 20000000)	Cable, Glv .13d 15.0l .38eye /.38eye	1
	19	12277	(10000000- 20000000)	Screw, Hex, M6 X 1.00 X 20, Nl, Ss	1
	20	1034731	(10000000- 20000000)	Screw, Hex, M6 X 1.00 X 16, Sems, Ss	2
	21	1233933	(10000000- 20000000)	Plate, Tank Lock, Top [T600ee]	1

∇ ASSEMBLY

▲ INCLUDED IN ASSEMBLY

RECOVERY TANK COVER GROUP

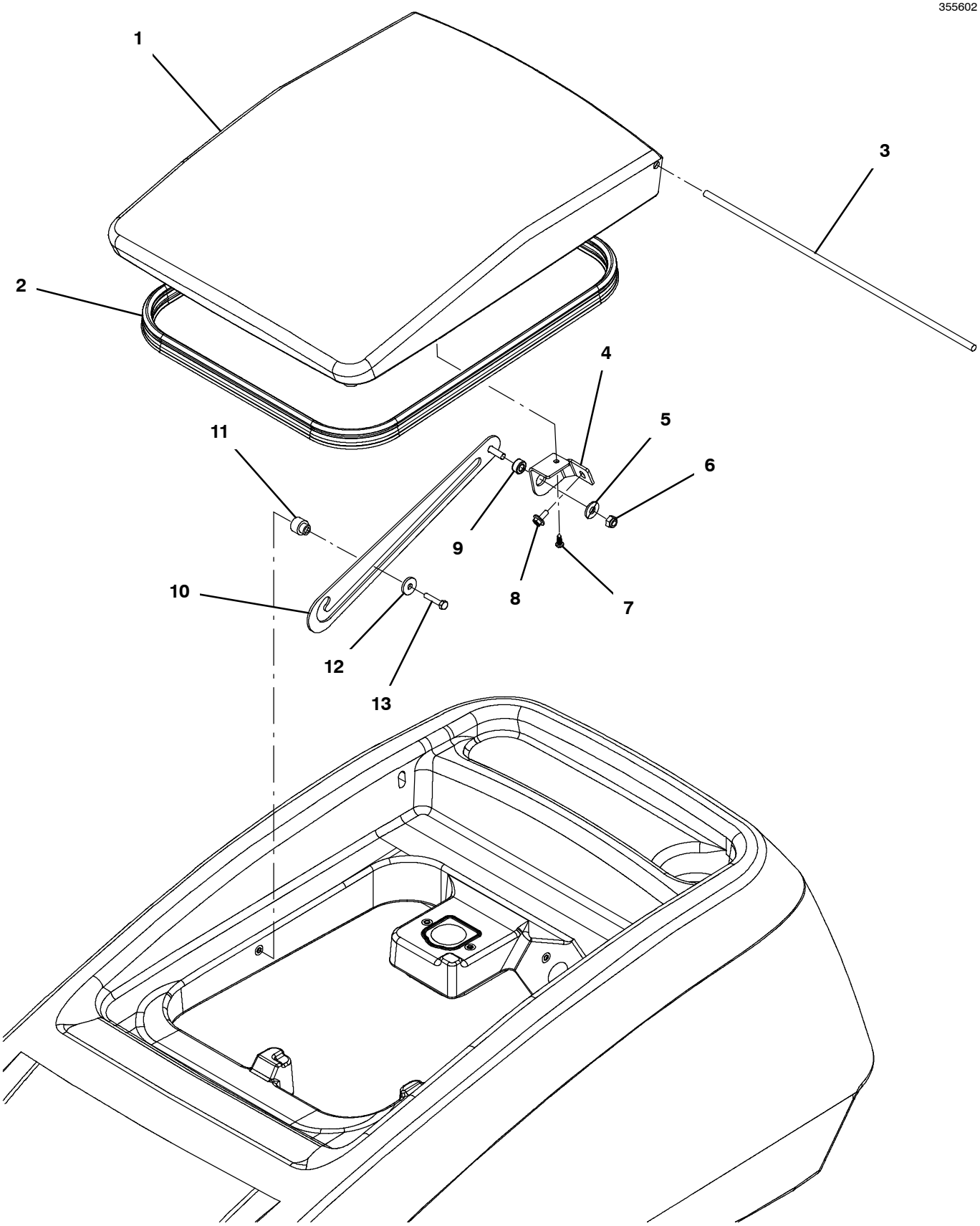

RECOVERY TANK COVER GROUP

	Ref.	Part No.	Serial Number	Description	Qty.
∇	1	9016824	(10000000- 20000000)	Cover,Tank, Recvy, Afmkt [T600, Na Wlab] (With Label)	1
▲	2	1066433	(10000000- 20000000)	Seal, Afmkt, Bulb, Dual, 08ft [F/.30gap]	1
	3	1230116	(10000000- 20000000)	Bar, Rnd, Plstc, 0.31d 18.4l	1
	4	1229908	(10000000- 20000000)	Bracket, Mtg, Rod, Prop	1
	5	01685	(10000000- 20000000)	Washer, Flat, 0.38b 0.88d .08, Ss	1
	6	08713	(10000000- 20000000)	Nut, Hex, Lock, M8 X 1.25, Nl, Ss	1
	7	1018155	(10000000- 20000000)	Screw, Pan, Phl, M5 X 0.80 X 16, Tcut,Ss	1
	8	1034731	(10000000- 20000000)	Screw, Hex, M6 X 1.00 X 16, Sems, Ss	1
	9	360460	(10000000- 20000000)	Sleeve, P/M, 0.34b 0.63d 0.4l, Ss / Oil	1
	10	1229911	(10000000- 20000000)	Plate Wldt, Cover, Rcvy	1
	11	230735	(10000000- 20000000)	Sleeve, P/M, Flng, 0.33b 0.75/0.50d 0.8l	1
	12	01684	(10000000- 20000000)	Washer, Flat, 0.27b 0.69d .05, Ss	1
	13	12277	(10000000- 20000000)	Screw, Hex, M6 X 1.00 X 20, Nl, Ss	1

∇ ASSEMBLY

▲ INCLUDED IN ASSEMBLY

RECOVERY TANK FILTER AND HOSE GROUP, PINCH TWIST CAP

355600

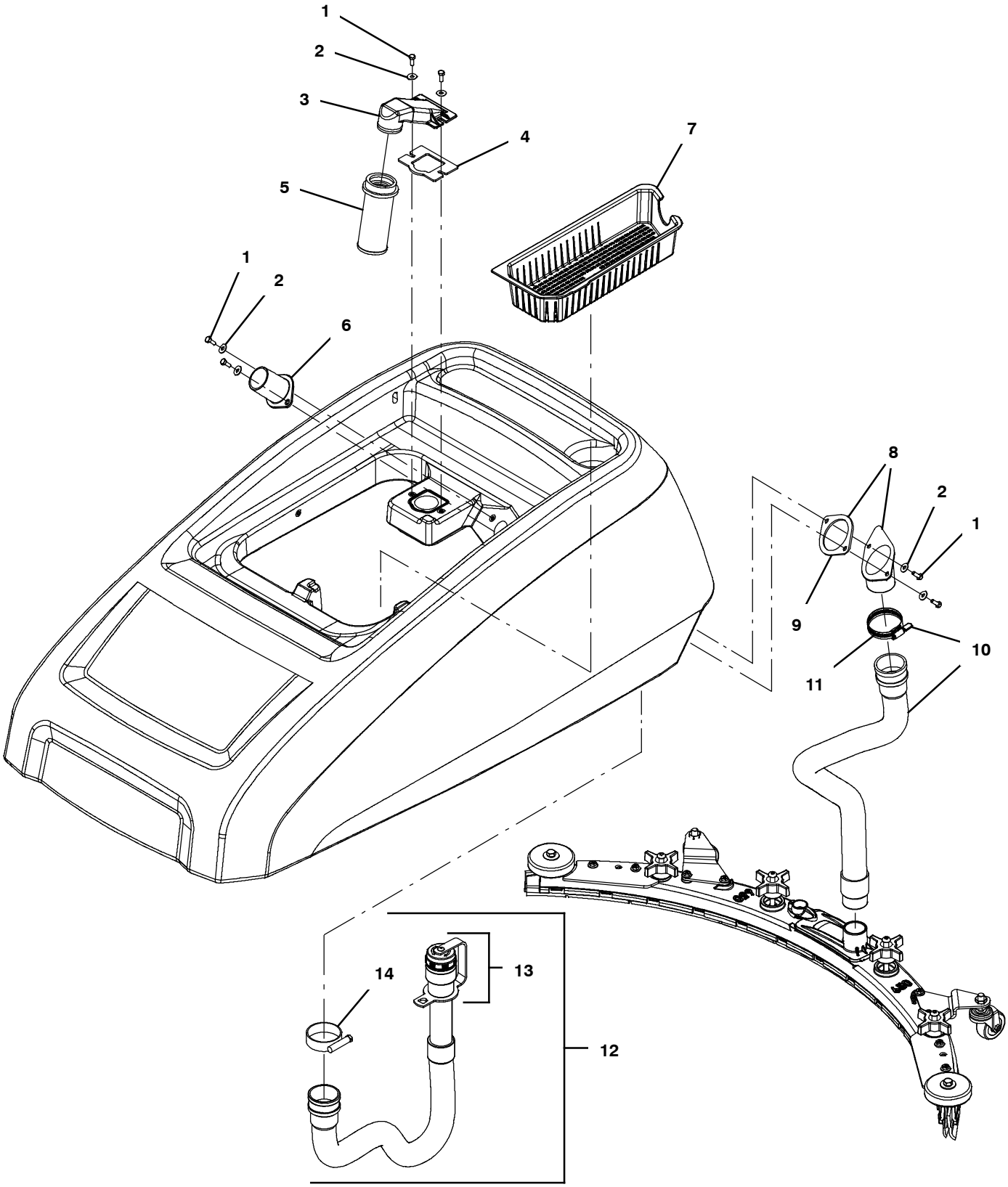

RECOVERY TANK FILTER AND HOSE GROUP, PINCH TWIST CAP

	Ref.	Part No.	Serial Number	Description	Qty.
	1	11329	(10000000- 20000000)	Screw, Hex, M6 X 1.00 X 16, Nl, Ss	6
	2	01684	(10000000- 20000000)	Washer, Flat, 0.27b 0.69d .05, Ss	6
	3	1011777	(10000000- 20000000)	Mount, Float, Mold	1
	4	1013628	(10000000- 20000000)	Gasket, Mtg, Float, .125th, Neo, Adh	1
	5	609531	(10000000- 20000000)	Float, Shutoff, Vacuum, 1- Ball, 1.50d	1
	6	1229076	(10000000- 20000000)	Tube, Adapter, 1.7d [T600]	1
	7	1230171	(10000000- 20000000)	Tray, Debris [T600]	1
∇	8	9017581	(10000000- 20000000)	Tube Kit, Adapter, Afmkt [T600/T600e]	1
▲	9	1230613	(10000000- 20000000)	Gasket, Adapter, Hose, Neo	1
∇	10	9017505	(10000000- 20000000)	Hose Kit, Recvy, Pvc, Ci [T600/T600e] (Black)	1
▲	11	1243301	(10000000- 20000000)	Clamp, Wormdrive, 2.0d, .56w	1
∇	12	9017507	(10000000- 20000000)	Hose Kit, Drain, Pvc, Ci [T600/T600e] (Black)	1
▲∇	13	1232385	(10000000- 20000000)	Cap, Drain Assy [Black, T500e]	1
▲▲		1008637	(10000000- 20000000)	Seal, Org, 1.48id 1.76od	1
▲	14	22297	(10000000- 20000000)	Clamp, Hose, Wormdrive, 1.56- 2.50d, .50w	1

∇ ASSEMBLY

▲ INCLUDED IN ASSEMBLY

SOLUTION TANK GROUP, AUTO- FILL

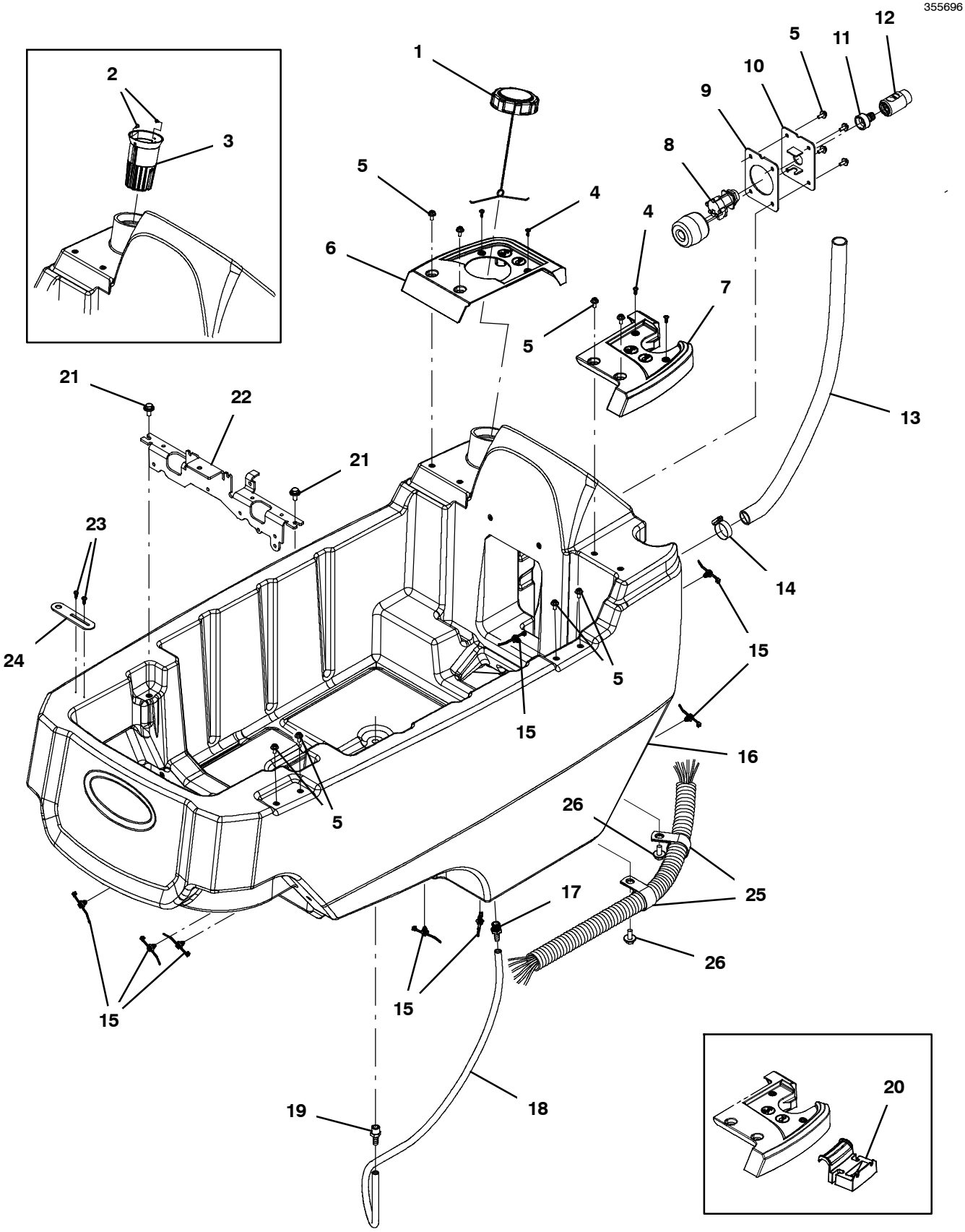

SOLUTION TANK GROUP, AUTO- FILL

Ref.	Part No.	Serial Number	Description	Qty.
1	1011885	(10000000- 20000000)	Cap, Tank	1
2	3701.6	(10000000- 10923837)	Screw, Pan, Phl, 06- 32 X 0.38, Shtmtl,Ss	2
3	1231617	(10000000- 10923837)	Strainer, Port, Fill, Taper	1
4	1018155	(10000000- 20000000)	Screw, Pan, Phl, M5 X 0.80 X 16, Tcut,Ss	4
5	1034731	(10000000- 20000000)	Screw, Hex, M6 X 1.00 X 16, Sems, Ss	12
6	1232011	(10000000- 20000000)	Tray, Accssry, Fill, Rh [T600/T600e]	1
7	1228885	(10000000- 20000000)	Tray, Accssry, Drain, Lh [T600/T600e]	1
8	1219566	(10000000- 20000000)	Valve, Float, 6.7gpm	1
9	1228286	(10000000- 20000000)	Gasket, Bracket, Fill, Auto	1
10	1231938	(10000000- 20000000)	Bracket Wldt, Fill, Auto	1
11	1227400	(10000000- 20000000)	Fitting, Plstc, Qd, Male	1
12	1227512	(10000000- 20000000)	Fitting, Plstc, Qd, Female	1
13	9015728	(10000000- 20000000)	Hose Kit, Drain, Soln, Ci [T500/T500e]	1
14	11399	(10000000- 20000000)	Clamp, Hose, Wormdrive, 0.81- 1.50d, .50w	1
15	1210807	(10000000- 20000000)	Wire, Tie [W/.25” Fir Tree Clip]	7
16	9016823	(10000000- 20000000)	Tank, Soltn, Afmkt [T600, T600e] (With Labels)	1
17	1233349	(10000000- 20000000)	Fitting, Plstc, Str, Bm06/Pm06 [Vented]	1
18	41295	(10000000- 20000000)	Hose, Pvc, Clr, 0.38id 0.56od 048.0l	1
19	150538	(10000000- 20000000)	Fitting, Plstc, Str, Bm06/Pm06	1
20	1214292	(10000000- 20000000)	Bracket, Hanger, Rail, Lrg (Option - No Longer Available)	1
21	1020341	(10000000- 20000000)	Screw, Hex, M8 X 1.25 X 20, Ss, Sems	2
22	1229460	(10000000- 20000000)	Bracket, Sppt	1
23	1018155	(10000000- 20000000)	Screw, Pan, Phl, M5 X 0.80 X 16, Tcut,Ss	2
24	1233934	(10000000- 20000000)	Plate, Tank Lock, Bottom [T600ee]	1
25	53466	(10000000- 20000000)	Clamp, Cable, Stl, 1.50d X 1.00w, 1hole	2
26	1020341	(10000000- 20000000)	Screw, Hex, M8 X 1.25 X 20, Ss, Sems	2

ELECTRICAL PANEL GROUP

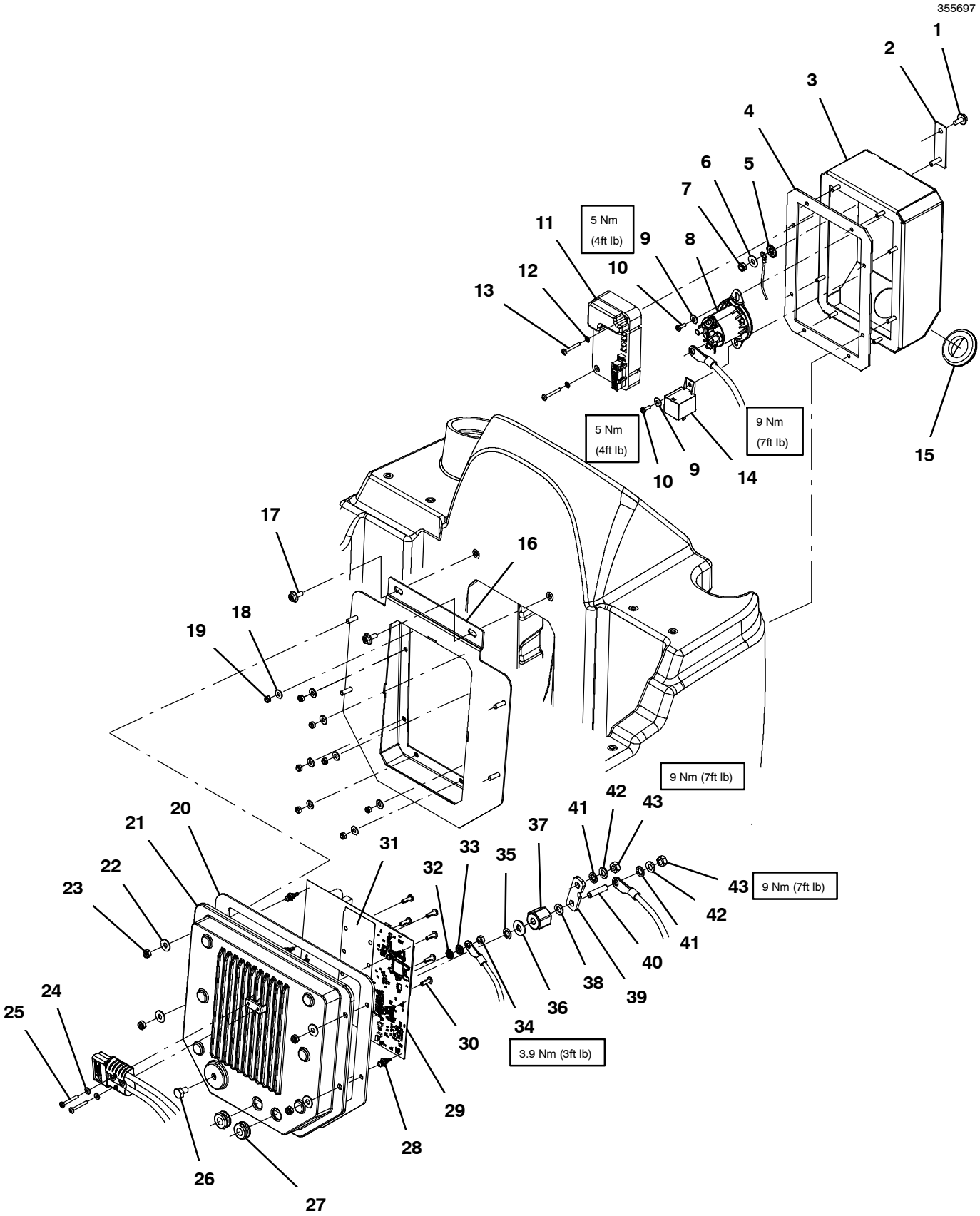

ELECTRICAL PANEL GROUP

	Ref.	Part No.	Serial Number	Description	Qty.
	1	1034731	(10000000- 20000000)	Screw, Hex, M6 X 1.00 X 16, Sems, Ss	1
	2	1236521	(10000000- 20000000)	Bracket Wldt, Mtg, Enclosure [T600ee]	1
	3	1237703	(10000000- 20000000)	Bracket Wldt, Mount [T600ee]	1
	4	1238393	(10000000- 20000000)	Gasket, Enclosure [T600ee]	1
	5	41140	(10000000- 20000000)	Washer, Lock, Int- Ext, 0.25	1
	6	01684	(10000000- 20000000)	Washer, Flat, 0.27b 0.69d .05, Ss	1
	7	08712	(10000000- 20000000)	Nut, Hex, Lock, M6 X 1.00, Nl, Ss	1
	8	1228368	(10000000- 20000000)	Relay, 36vdc, 125a, No	1
	9	01683	(10000000- 20000000)	Washer, Flat, 10, Ss	2
	10	579237	(10000000- 20000000)	Screw, Pan, Phl, M4 X 0.70 X 12, Ss	2
	11	9017641*	(10000000- 20000000)	Controller Kit, Drive, Ci [T600/T600e]	1
	12	02938	(10000000- 20000000)	Washer, Lock, Int, 08, Ss	2
	13	33931	(10000000- 20000000)	Screw, Pan, Phl, M4 X 0.70 X 30, Ss	2
	14	1229172	(10000000- 20000000)	Relay, 36vdc, 025a, Spdt	1
	15	1238636	(10000000- 20000000)	Grommet	1
	16	1237690	(10000000- 20000000)	Bracket Wldt, Mount [T600ee]	1
	17	1034731	(10000000- 20000000)	Screw, Hex, M6 X 1.00 X 16, Sems, Ss	2
	18	01683	(10000000- 20000000)	Washer, Flat, 10, Ss	8
	19	09739	(10000000- 20000000)	Nut, Hex, Lock, M5 X 0.80, Nl, Ss	8
	20	1236935	(10000000- 20000000)	Gasket, Heatsink [T600ee]	1
	21	1235034	(10000000- 20000000)	Heatsink, Circuitboard, Mach [T600ee]	1
	22	01684	(10000000- 20000000)	Washer, Flat, 0.27b 0.69d .05, Ss	4
	23	08712	(10000000- 20000000)	Nut, Hex, Lock, M6 X 1.00, Nl, Ss	4
	24	41578	(10000000- 20000000)	Washer, Flat, 06, Ss	2
	25	33931	(10000000- 20000000)	Screw, Pan, Phl, M4 X 0.70 X 30, Ss	2
	26	386868	(10000000- 20000000)	Screw, Hex, M8 X 1.25 X 12, Ss	1
	27	86726	(10000000- 20000000)	Grommet, Rbr, 0.44id, F/0.5h, .19 Matl	2
	28	1209448	(10000000- 20000000)	Standoff, Circuitboard, .25	6
∇	29	9017501	(10000000- 20000000)	Circutboard Kit, Ci [T600]	1
▲		27964	(10000000- 20000000)	Strap, Ground, Static, Disposable	1
▲		1071235	(10000000- 20000000)	Cable [Usb, 2m, A- Male To Mini- B- Male]	1
	30	1205799	(10000000- 20000000)	Screw, Btn, M5 X 0.8 X 16, 8.8, Nl, Torx	8
	31	1220930	(10000000- 20000000)	Circuitboard, Silpad [T500, Main Scrub]	1
	32	07515	(10000000- 20000000)	Washer, Lock, Int, 0.25, Ss	1
	33	1061918	(10000000- 20000000)	Washer, Flat, 0.25b 0.47d .06, Brs	1
	34	1061910	(10000000- 20000000)	Nut, Hex, Std, M6 X 1.00, Brs	1
	35	32984	(10000000- 20000000)	Washer, Lock, Int, 0.31	1
	36	01685	(10000000- 20000000)	Washer, Flat, 0.38b 0.88d .08, Ss	1
	37	1205345	(10000000- 20000000)	Stand- Off, Wir, M8, Insulator, Panel	1
	38	1209373	(10000000- 20000000)	Washer, Flat, M8.4b X 16d X 1.6, Brs	1
	39	1234290	(10000000- 20000000)	Busbar, 125a 0.188 0.750w 2.126l	1
	40	607461	(10000000- 20000000)	Screw, Set, M8 X 1.25 X 35, Nl	1
	41	43952	(10000000- 20000000)	Washer, Lock, Int, 0.31, Ss	2
	42	1209373	(10000000- 20000000)	Washer, Flat, M8.4b X 16d X 1.6, Brs	2
	43	41361	(10000000- 20000000)	Nut, Hex, Std, M8 X 1.25, Brs	2

*** Requires Tennant *True* service or an authorized Tennant service provider**.

∇ ASSEMBLY

▲ INCLUDED IN ASSEMBLY

CIRCUIT BREAKER PANEL GROUP

355698

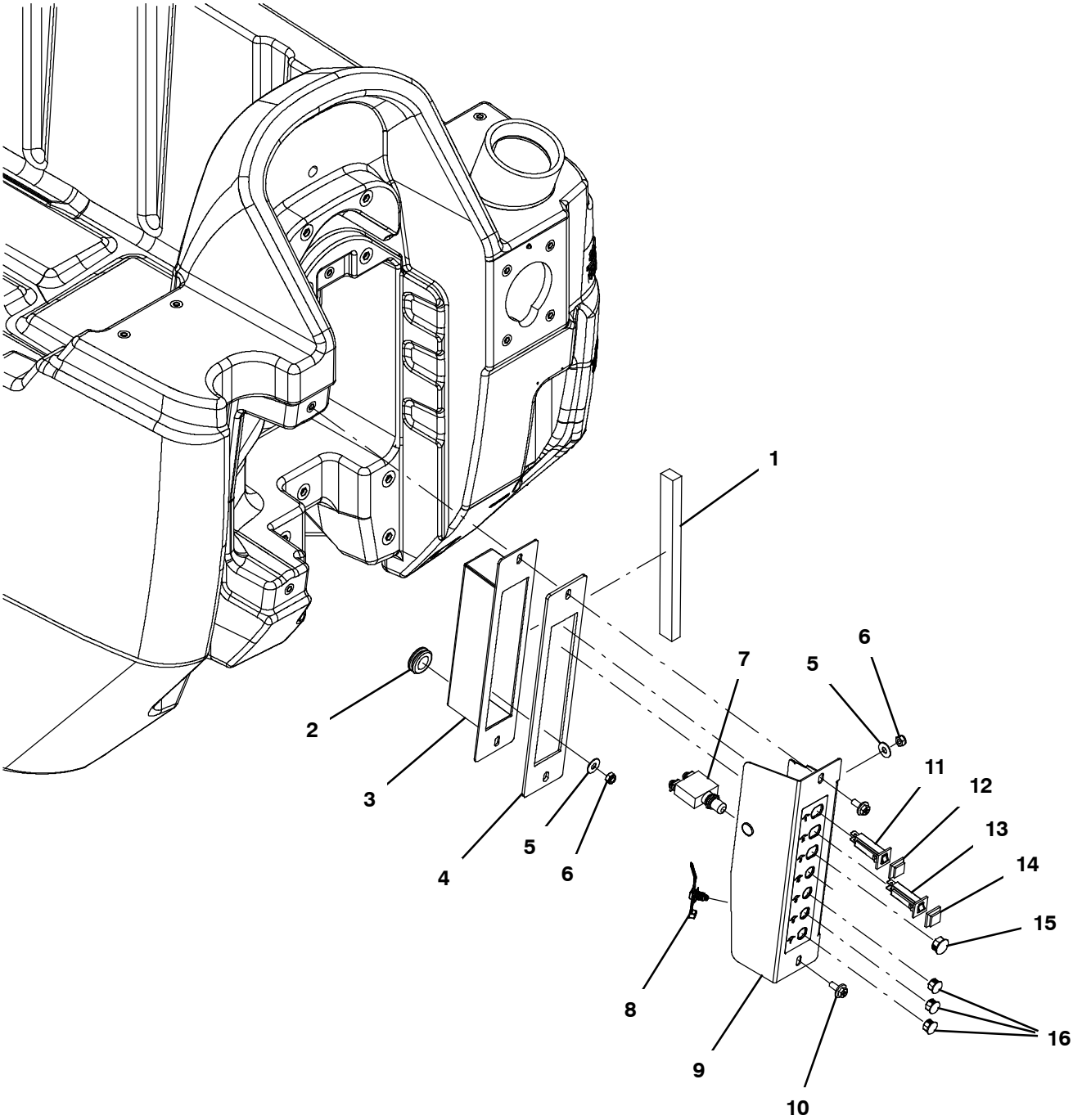

CIRCUIT BREAKER PANEL GROUP

Ref.	Part No.	Serial Number	Description	Qty.
1	1230333	(10000000- 20000000)	Gasket, Neo, .50 X .75, Psa	1
2	10632	(10000000- 20000000)	Grommet, Rbr, 0.89id, F/1.2h, .14 Matl	1
3	1236505	(10000000- 20000000)	Fusebox Wldt, Circuitbreaker [T600ee]	1
4	1236511	(10000000- 20000000)	Gasket, Enclosure, Breaker [T600ee]	1
5	01684	(10000000- 20000000)	Washer, Flat, 0.27b 0.69d .05, Ss	2
6	08712	(10000000- 20000000)	Nut, Hex, Lock, M6 X 1.00, Nl, Ss	2
7	383727	(10000000- 20000000)	Circuitbreaker, 40.0a, Resetable	1
8	1210807	(10000000- 20000000)	Wire, Tie [W/.25” Fir Tree Clip]	1
9	9016844	(10000000- 20000000)	Bracket, Circuitbreaker, Afmkt [T600]	1
10	1034731	(10000000- 20000000)	Screw, Hex, M6 X 1.00 X 16, Sems, Ss	2
11	1064184	(10000000- 20000000)	Circuitbreaker, 02.5a, Resetable	1
12	1064191	(10000000- 20000000)	Boot, Circuitbreaker	1
13	1064187	(10000000- 20000000)	Circuitbreaker, 10.0a, Resetable	1
14	1064191	(10000000- 20000000)	Boot, Circuitbreaker	1
15	1058340	(10000000- 20000000)	Plug, Hole, Rnd, 0.63h 0.1l, Blk	1
16	1232354	(10000000- 20000000)	Plug, Hole, Double D, 12.7 Dia	3

FRAME AND DRIVE GROUP, WITHOUT PARK LOCK

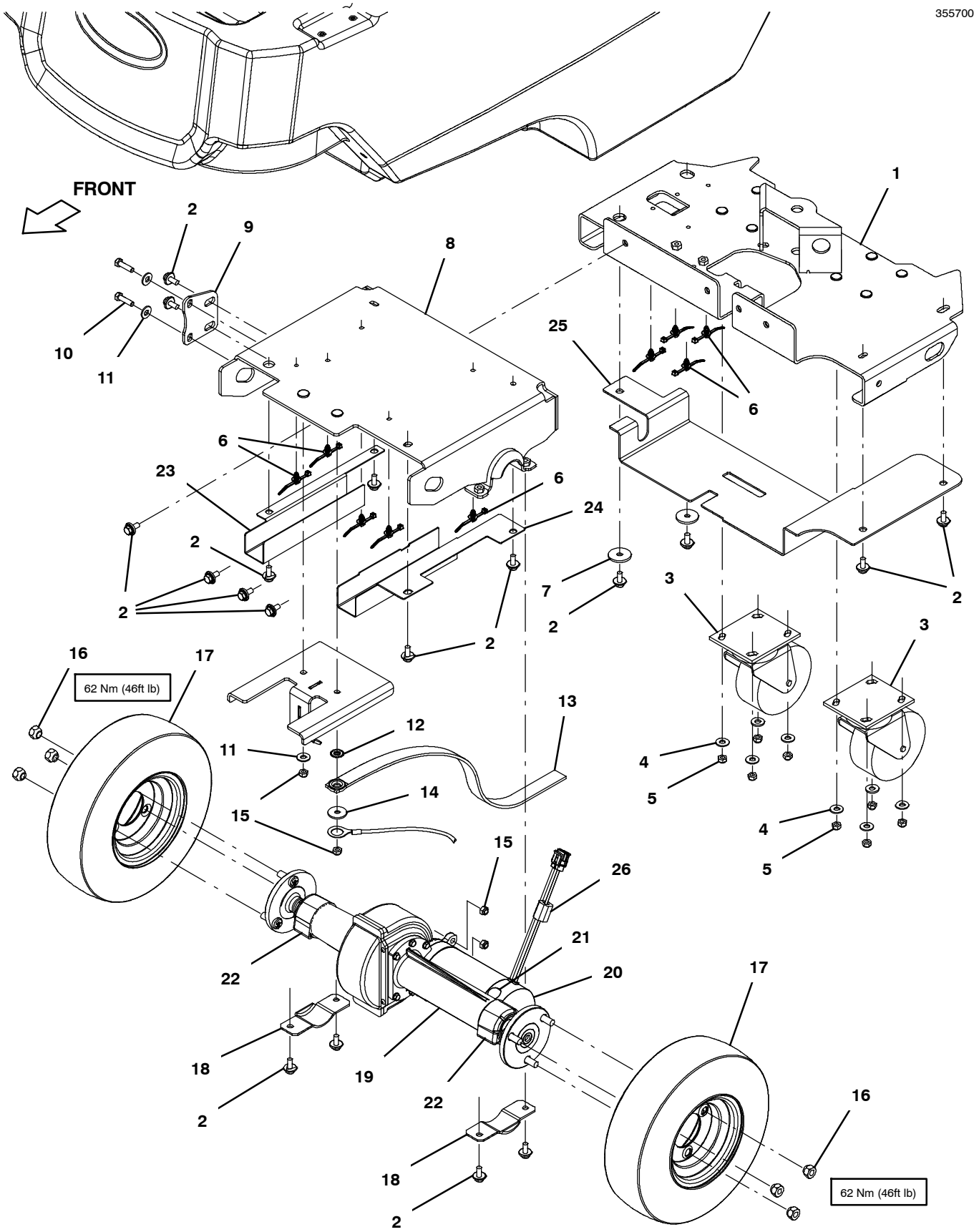

FRAME AND DRIVE GROUP, WITHOUT PARK LOCK

	Ref.	Part No.	Serial Number	Description	Qty.
	1	9020933	(10982717- 20000000)	Frame, Afmkt [T600, T600e] (With Label)	1
	1	9020773	(10975235- 10982716)	Frame, Afmkt [T600, T600e] (With Label) (Replaced By 9020933)	1
	1	9016858	(10000000- 10975234)	Frame, Afmkt [T600, T600e] (With Label) (Replaced By 9020933)	1
	2	1020341	(10000000- 20000000)	Screw, Hex, M8 X 1.25 X 20, Ss, Sems	18
	3	1049046	(10000000- 20000000)	Caster, Swivel, 5.0d 2.0w, 4hole, Gray	2
	4	01685	(10000000- 20000000)	Washer, Flat, 0.38b 0.88d .08, Ss	8
	5	08713	(10000000- 20000000)	Nut, Hex, Lock, M8 X 1.25, Nl, Ss	8
	6	1210807	(10000000- 20000000)	Wire, Tie [W/.25” Fir Tree Clip]	9
	7	1016331	(10000000- 20000000)	Washer, Flat, 0.34b 1.25d .11, Ss	2
	8	1228962	(10000000- 20000000)	Frame Wldt, Front	1
	9	1230091	(10000000- 20000000)	Bracket, Frame, Anti- Rotate	1
	10	1016399	(10000000- 20000000)	Screw, Hex, M8 X 1.25 X 30, Nl, Ss	2
	11	01685	(10000000- 20000000)	Washer, Flat, 0.38b 0.88d .08, Ss	3
	12	41141	(10000000- 20000000)	Washer, Lock, Int- Ext, 0.31	1
	13	71579	(10000000- 20000000)	Strap, Static, W/Grommet, .19 1.1w 25.0l	1
	14	01685	(10000000- 20000000)	Washer, Flat, 0.38b 0.88d .08, Ss	1
	15	08713	(10000000- 20000000)	Nut, Hex, Lock, M8 X 1.25, Nl, Ss	4
	16	11109	(10000000- 20000000)	Nut, Wheel, .44- 20 X 60 Angle	6
	17	1244374	(AUG2020- 20000000)	Tire Assy, Foam, Blk, 4.10/3.5- 06 3.5bc/3bolt (Standard - Non Marking)	2
	17	1231001	(10940148- JUL2020)	Tire Assy, Foam, 4.10/3.5- 06 3.5bc/3bolt (Standard - Non Marking - Replaced by 1244374)	2
	17	1236073	(10000000- 10940147)	Tire Assy, Solid, 4.1/3.5- 06 3.5bc/3bolt (Standard) (Replaced By 1244374 - Order Qty2)	2
	17	1244372	(10944148- 20000000)	Tire Assy, Pneu, Blk, 4.10/3.5- 06 3.5bc (Option - Non Marking)	2
	17	1059450	(10000000- 10944147)	Tire Assy, Pneu, Blk, 4.10/3.5- 06 3.5bc (Option) (Replaced By 1244372)	2
	18	222036	(10000000- 20000000)	Bracket, Mtg, Isolator	2
∇	19	1230428	(10000000- 20000000)	Transaxle Assy, W/O Park Lock	1
▲∇	20	1243083	(10000000- 20000000)	Vr, Motor Kit, Transaxle [T600/T600e]	1
▲▲	21	1072555	(10000000- 20000000)	Vr, Brush Kit, Motor 1072554/1243083	1
▲	22	222035	(10000000- 20000000)	Isolator, Vib, Transaxle	2
	23	1240364	(10000000- 20000000)	Cover, Harness, Front, Rt [T600ee]	1
	24	1240363	(10000000- 20000000)	Cover, Harness, Front, Lft [T600ee]	1
	25	1240365	(10000000- 20000000)	Cover, Harness, Rear [T600ee]	1
	26	1052126	(10963451- 20000000)	Inductor, 12.7mmid [156 Imp At 25mhz]	1

∇ ASSEMBLY

▲ INCLUDED IN ASSEMBLY

FRAME AND DRIVE GROUP, WITH PARK LOCK

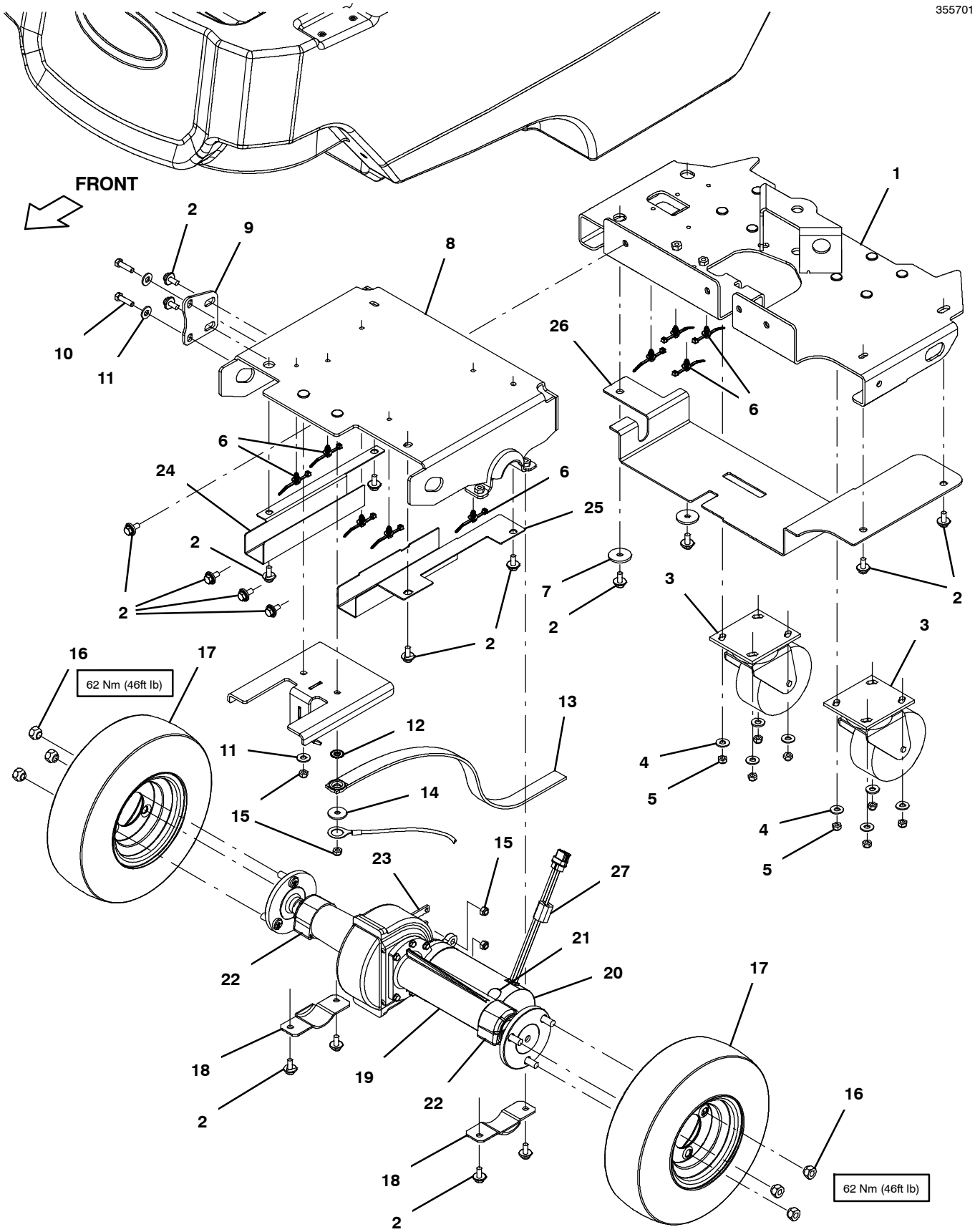

FRAME AND DRIVE GROUP, WITH PARK LOCK

	Ref.	Part No.	Serial Number	Description	Qty.
	1	9020933	(10982717- 20000000)	Frame, Afmkt [T600, T600e] (With Label)	1
	1	9020773	(10975235- 10982716)	Frame, Afmkt [T600, T600e] (With Label) (Replaced By 9020933)	1
	1	9016858	(10000000- 10975234)	Frame, Afmkt [T600, T600e] (With Label) (Replaced By 9020933)	1
	2	1020341	(10000000- 20000000)	Screw, Hex, M8 X 1.25 X 20, Ss, Sems	18
	3	1049046	(10000000- 20000000)	Caster, Swivel, 5.0d 2.0w, 4hole, Gray	2
	4	01685	(10000000- 20000000)	Washer, Flat, 0.38b 0.88d .08, Ss	8
	5	08713	(10000000- 20000000)	Nut, Hex, Lock, M8 X 1.25, Nl, Ss	8
	6	1210807	(10000000- 20000000)	Wire, Tie [W/.25” Fir Tree Clip]	9
	7	1016331	(10000000- 20000000)	Washer, Flat, 0.34b 1.25d .11, Ss	2
	8	1228962	(10000000- 20000000)	Frame Wldt, Front	1
	9	1230091	(10000000- 20000000)	Bracket, Frame, Anti- Rotate	1
	10	1016399	(10000000- 20000000)	Screw, Hex, M8 X 1.25 X 30, Nl, Ss	2
	11	01685	(10000000- 20000000)	Washer, Flat, 0.38b 0.88d .08, Ss	3
	12	41141	(10000000- 20000000)	Washer, Lock, Int- Ext, 0.31	1
	13	71579	(10000000- 20000000)	Strap, Static, W/Grommet, .19 1.1w 25.0l	1
	14	01685	(10000000- 20000000)	Washer, Flat, 0.38b 0.88d .08, Ss	1
	15	08713	(10000000- 20000000)	Nut, Hex, Lock, M8 X 1.25, Nl, Ss	4
	16	11109	(10000000- 20000000)	Nut, Wheel, .44- 20 X 60 Angle	6
	17	1244374	(AUG2020- 20000000)	Tire Assy, Foam, Blk, 4.10/3.5- 06 3.5bc/3bolt (Standard - Non Marking)	2
	17	1231001	(10940148- JUL2020)	Tire Assy, Foam, 4.10/3.5- 06 3.5bc/3bolt (Standard - Non Marking - Replaced by 1244374)	2
	17	1236073	(10000000- 10940147)	Tire Assy, Solid, 4.1/3.5- 06 3.5bc/3bolt (Standard) (Replaced By 1244374 - Order Qty2)	2
	17	1244372	(10944148- 20000000)	Tire Assy, Pneu, Blk, 4.10/3.5- 06 3.5bc (Option - Non Marking)	2
	17	1059450	(10000000- 10944147)	Tire Assy, Pneu, Blk, 4.10/3.5- 06 3.5bc (Option) (Replaced By 1244372)	2
	18	222036	(10000000- 20000000)	Bracket, Mtg, Isolator	2
∇	19	1230422	(10000000- 20000000)	Transaxle Assy, [W/Park Lock]	1
▲∇	20	1243083	(10000000- 20000000)	Vr, Motor Kit, Transaxle [T600/T600e]	1
▲▲	21	1072555	(10000000- 20000000)	Vr, Brush Kit, Motor 1072554/1243083	1
▲	22	222035	(10000000- 20000000)	Isolator, Vib, Transaxle	2
▲	23	1074732	(10000000- 20000000)	Brake, Transaxle	1
	24	1240364	(10000000- 20000000)	Cover, Harness, Front, Rt [T600ee]	1
	25	1240363	(10000000- 20000000)	Cover, Harness, Front, Lft [T600ee]	1
	26	1240365	(10000000- 20000000)	Cover, Harness, Rear [T600ee]	1
	27	1052126	(10963451- 20000000)	Inductor, 12.7mmid [156 Imp At 25mhz]	1

∇ ASSEMBLY

▲ INCLUDED IN ASSEMBLY

HEAD LIFT GROUP, DISK

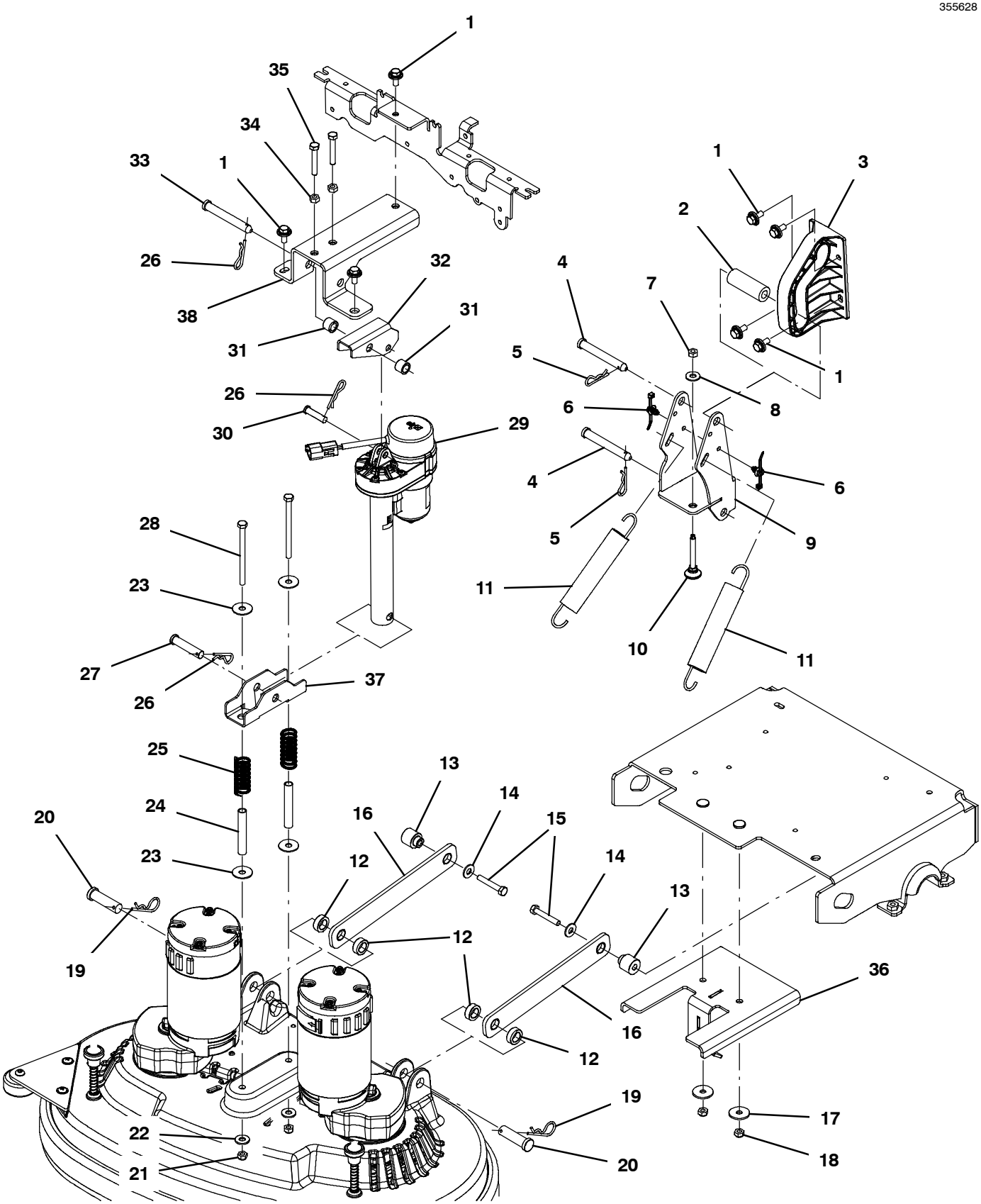

HEAD LIFT GROUP, DISK

Ref.	Part No.	Serial Number	Description	Qty.
1	1020341	(10000000- 20000000)	Screw, Hex, M8 X 1.25 X 20, Ss, Sems	7
2	1220305	(10000000- 20000000)	Tube, Plstc, 0.51id 0.98od 02.8l	1
3	1219912	(10000000- 20000000)	Bracket, Guide, Head[T500]	1
4	374225	(10000000- 20000000)	Pin, Clevis, 0.50d X 3.75l	2
5	140626	(10000000- 20000000)	Pin, Cotter, Hair, 0.25d .125 Wir	2
6	1210807	(10000000- 20000000)	Wire, Tie [W/.25” Fir Tree Clip]	2
7	07786	(10000000- 20000000)	Nut, Hex, Std, M8 X 1.25, Ss	1
8	01685	(10000000- 20000000)	Washer, Flat, 0.38b 0.88d .08, Ss	1
9	1221507	(10000000- 20000000)	Pivot Wldt, Head, Scrub [T500]	1
10	1227530	(10000000- 20000000)	Screw, Leveler, M8x75	1
11	222363	(10000000- 20000000)	Spring, Extn, 1.23od 0.15wir 06.5l	2
12	1235274	(10000000- 20000000)	Spacer, Head	4
13	1235275	(10000000- 20000000)	Spacer, Frame	2
14	01685	(10000000- 20000000)	Washer, Flat, 0.38b 0.88d .08, Ss	2
15	73399	(10000000- 20000000)	Screw, Hex, M8 X 1.25 X 50, Nl, Ss	2
16	9016859	(10000000- 20000000)	Arm Assy, Lift, Hd, Scb, Afmkt [T600]	2
17	1016331	(10000000- 20000000)	Washer, Flat, 0.34b 1.25d .11, Ss	2
18	08713	(10000000- 20000000)	Nut, Hex, Lock, M8 X 1.25, Nl, Ss	2
19	02942	(10000000- 20000000)	Pin, Hair, Cotter, 0.62d .120 Wir	2
20	222210	(10000000- 20000000)	Pin, Clevis, 0.62d X 2.12l	2
21	08713	(10000000- 20000000)	Nut, Hex, Lock, M8 X 1.25, Nl, Ss	2
22	01685	(10000000- 20000000)	Washer, Flat, 0.38b 0.88d .08, Ss	2
23	32662	(10000000- 20000000)	Washer, Flat, 0.38b 1.22d .06, Ss	4
24	1230697	(10000000- 20000000)	Sleeve, 0.4id .50d 3.2l	2
25	1230441	(10000000- 20000000)	Spring, Cmpr, 0.97od .11wir 2.50l	2
26	140626	(10000000- 20000000)	Pin, Cotter, Hair, 0.25d .125 Wir	3
27	11211	(10000000- 20000000)	Pin, Clevis, 0.50d X 2.25l	1
28	364441	(10000000- 20000000)	Screw, Hex, M8 X 1.25 X 110, Ss	2
29	9016969	(10000000- 20000000)	Actuator, Replmt, 36vdc, 7.00strk	1
30	29558	(10000000- 20000000)	Pin, Clevis, 0.37d X 1.50l	1
31	1230044	(10000000- 20000000)	Sleeve, 0.50b 0.75d 0.59l	2
32	1229682	(10000000- 20000000)	Bracket, Mount, Tilt, Actuator [T600]	1
33	374225	(10000000- 20000000)	Pin, Clevis, 0.50d X 3.75l	1
34	07786	(10000000- 20000000)	Nut, Hex, Std, M8 X 1.25, Ss	2
35	578717	(10000000- 20000000)	Screw, Hex, M8 X 1.25 X 50, Fl, Ss	2
36	1230097	(10000000- 20000000)	Bracket Wldt, Frame, Stop	1
37	1230622	(10000000- 20000000)	Brkt, Spring, Suspension, Head	1
38	1229680	(10000000- 20000000)	Bracket Wldt, Mount, Actuator [T600]	1

LOWER CONSOLE GROUP, OFF- BOARD CHARGER

355609

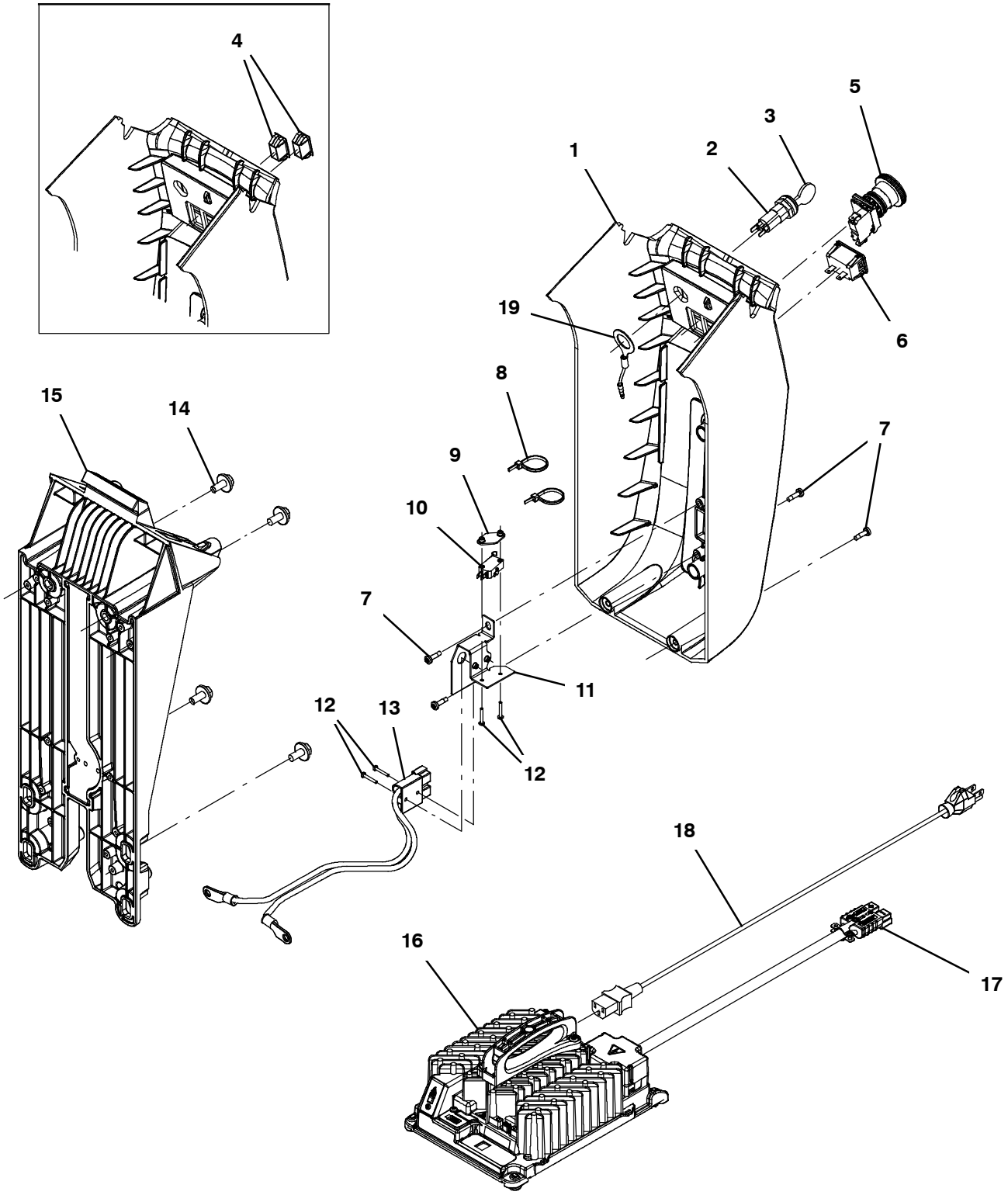

LOWER CONSOLE GROUP, OFF- BOARD CHARGER

	Ref.	Part No.	Serial Number	Description	Qty.
	1	9022973	(11078603- 20000000)	Cover, Console, Afmkt [T600, Na] (With Labels)	1
	1	9016861	(10000000- 11078602)	Cover, Console, Afmkt [T600, Na] (With Label)	1
∇	2	1011402	(10000000- 20000000)	Switch, Key	1
▲	3	1017696	(10000000- 20000000)	Key Set, Replmt [F/ Keyswitch 1011402]	1
	4	582150	(10000000- 11078602)	Plug, Hole, Rt, 1.23 X 1.12, Nyl	2
	5	1266688	(11102959- 20000000)	Switch, Safety, Shutoff	1
	5	1011735	(10000000- 11102958)	Switch, Safety, Shutoff (Replaced By 1266688)	1
	6	1064038	(10000000- 20000000)	Gauge, Hourmeter, 05- 277 Volt, Ac / Dc	1
	7	1043573	(10000000- 20000000)	Screw, #10- 14 X 0.675, Spl[Shcs,Selftap]	6
	8	130773	(10000000- 20000000)	Tie, Cable, Nyl, 11.0l, .14w, 3.0 Max. D	2
	9	1013705	(10000000- 20000000)	Plate, Thread, Switch, M3 Nut, 96hr Pl	1
	10	1215716	(10000000- 20000000)	Switch, 0.1a, Spdt[Micro, Gold Contacts]	1
	11	1208599	(10000000- 20000000)	Bracket Assy, Plug, Charger	1
	12	06922	(10000000- 20000000)	Screw, Pan, Phl, M3 X 0.50 X 20, 4.8	4
	13	1075458	(10000000- 20000000)	Harness, Chrgr, 10ga [M8 Ring/M8 Ring]	1
	14	1020341	(10000000- 20000000)	Screw, Hex, M8 X 1.25 X 20, Ss, Sems	4
	15	1231373	(10000000- 20000000)	Frame, Column, Cntrl [Im], T600	1
∇	16	9042253	(10000000- 20000000)	Charger Assy, Off Board [T600/T600e]	1
▲	17	130155	(10000000- 20000000)	Connector, Battery, 6ga 50a, Gray[2cont]	1
	18	1025642	(10000000- 20000000)	Cord, Power, 16/3, 15ft Blk [Us]	1
	19	1073037	(10000000- 20000000)	Harness, Ele [Key Sw.,Static Gnd]	1

∇ ASSEMBLY

▲ INCLUDED IN ASSEMBLY

CONSOLE HANDLE GROUP, PROPEL

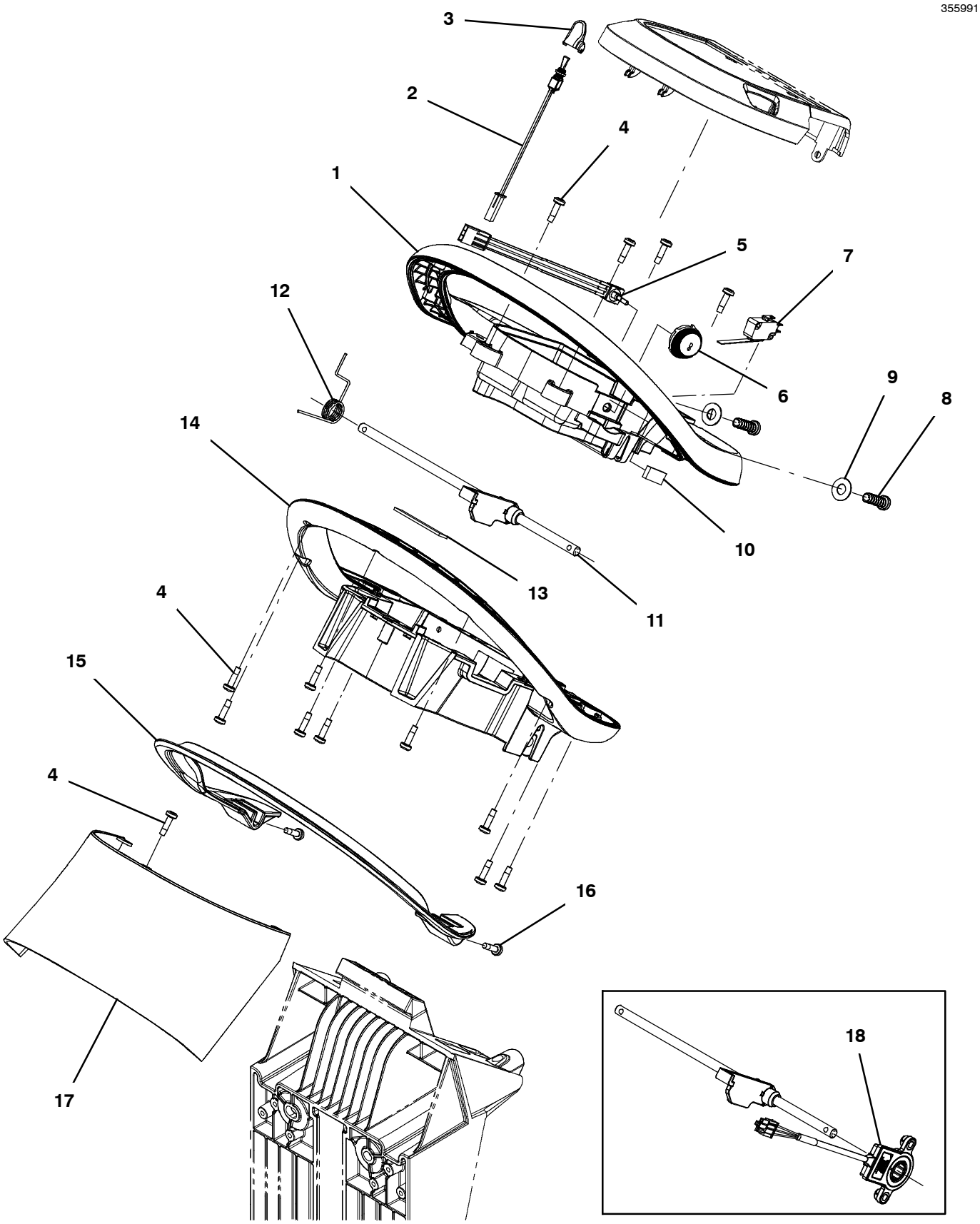

CONSOLE HANDLE GROUP, PROPEL

Ref.	Part No.	Serial Number	Description	Qty.
1	1203787	(10000000- 20000000)	Housing, Handle, Cntrl, Top	2
2	1209673	(10000000- 20000000)	Switch Assy, Toggle, Direction	1
3	1209730	(10000000- 20000000)	Cap, Toggle, Direction	1
4	1043573	(10000000- 20000000)	Screw, #10- 14 X 0.675, Spl[Shcs,Selftap]	15
5	1256757	(11008310- 20000000)	Potentiometer [100k, 1 Turn, Multi- Mach]	1
5	1246392	(10947677- 11008309)	Potentiometer [100k, 1 Turn, Multi- Mach] (Replaced by 1256757)	1
5	1204930	(10000000- 10947676)	Potentiometer [100k, 1 Turn] (Replaced by 1256757)	1
6	1234365	(10000000- 20000000)	Dial, Range, Speed	1
7	1205323	(10982737- 20000000)	Switch, 0.1a, Spdt [Micro, Straight]	1
8	1215863	(10000000- 20000000)	Screw, Pan, Torx, M8 X 3.5 X 25[Remform]	2
9	140027	(10000000- 20000000)	Washer, Flat, 0.35b 0.75d .04, Ss	2
10	1063909	(MAR2020- 20000000)	Seal, Afmkt, Rbr, Clsd, Adh, 01ft	1
11	1205143	(10000000- 20000000)	Shaft Assy, Bail, Handle	1
12	1205781	(10000000- 20000000)	Spring, Return, Bail	1
13	1020280	(10000000- 20000000)	Seal, Afmkt, Rbr, Clsd, Adh, 01ft	1
14	1222608	(10000000- 20000000)	Housing, Handle, Cntrl, Bottom, Slotted	1
15	1205778	(10000000- 20000000)	Handle, Bail [Machined]	1
20	1205799	(10000000- 20000000)	Screw, Btn, M5 X 0.8 X 16, 8.8, Nl, Torx	2
21	1207004	(10000000- 20000000)	Cover, Handle, Cntrl	1
22	1205127	(10000000- 10982736)	Sensor, Rotary [B5/B7, Bail Sensor]	1

CONSOLE PANEL, PRO- MEMBRANE, WITHOUT TELEMETRY

355993

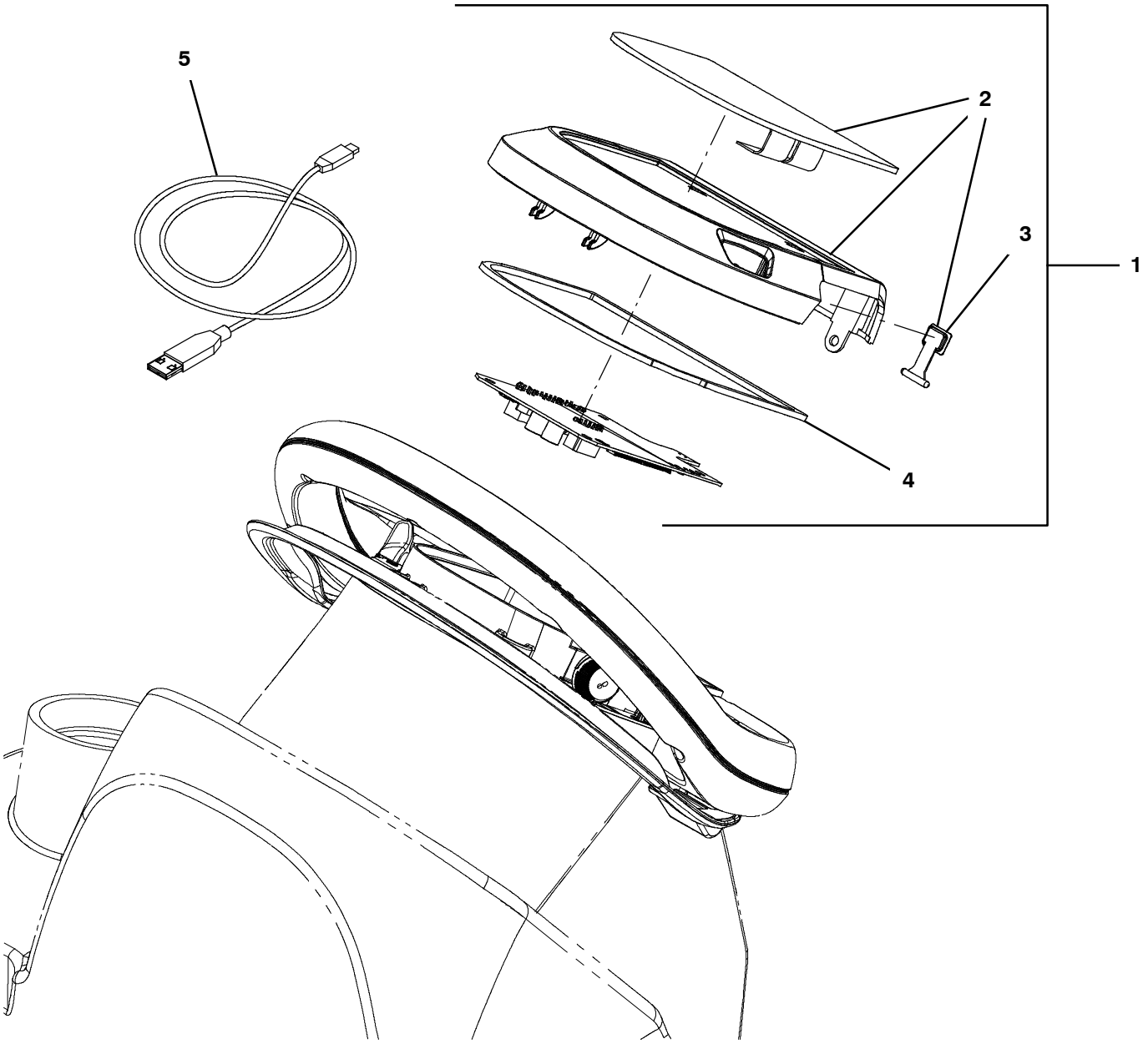

Membrane Replacement Order 9023022

Membrane Replacement Order 9021919

Note Visual Difference Only When Illuminated

CONSOLE PANEL, PRO- MEMBRANE, WITHOUT TELEMETRY

	Ref.	Part No.	Serial Number	Description	Qty.
∇	1	9021887*	(11063356- 20000000)	Bezel Kit, Membrane, Ci [T500/T600]	1
▲∇	2	9021919**	(11063356- 20000000)	Screen Kit, Membrane, Ci [T500/T600]	1
▲▲	3	1245824	(MAR2020- 20000000)	Gasket, Console	1
▲▲	4	1205618	(10000000- 20000000)	Cap, Usb	1
	5	1071235	(10000000- 20000000)	Cable [Usb, 2m, A- Male To Mini- B- Male]	1
∇	1	9015778*	(10000000- 11063355)	Bezel Kit, Membrane, Ci [T500, T600] (Kit Includes Circuitboard) (Replaced By 9023022*)	1
▲∇	2	9015779**	(10000000- 11063355)	Screen Kit, Membrane, Ci [T500, T600] (Replaced By 9023022*)	1
▲▲	3	1245824	(MAR2020- 20000000)	Gasket, Console	1
▲▲	4	1205618	(10000000- 20000000)	Cap, Usb	1
	5	1071235	(10000000- 20000000)	Cable [Usb, 2m, A- Male To Mini- B- Male]	1

*** Requires Tennant *True* service or an authorized Tennant service provider**.

**** Before Ordering Screen Kit Confirm Screen Visually Matches Correct Screen Image**.

∇ ASSEMBLY

▲ INCLUDED IN ASSEMBLY

SQUEEGEE LIFT GROUP

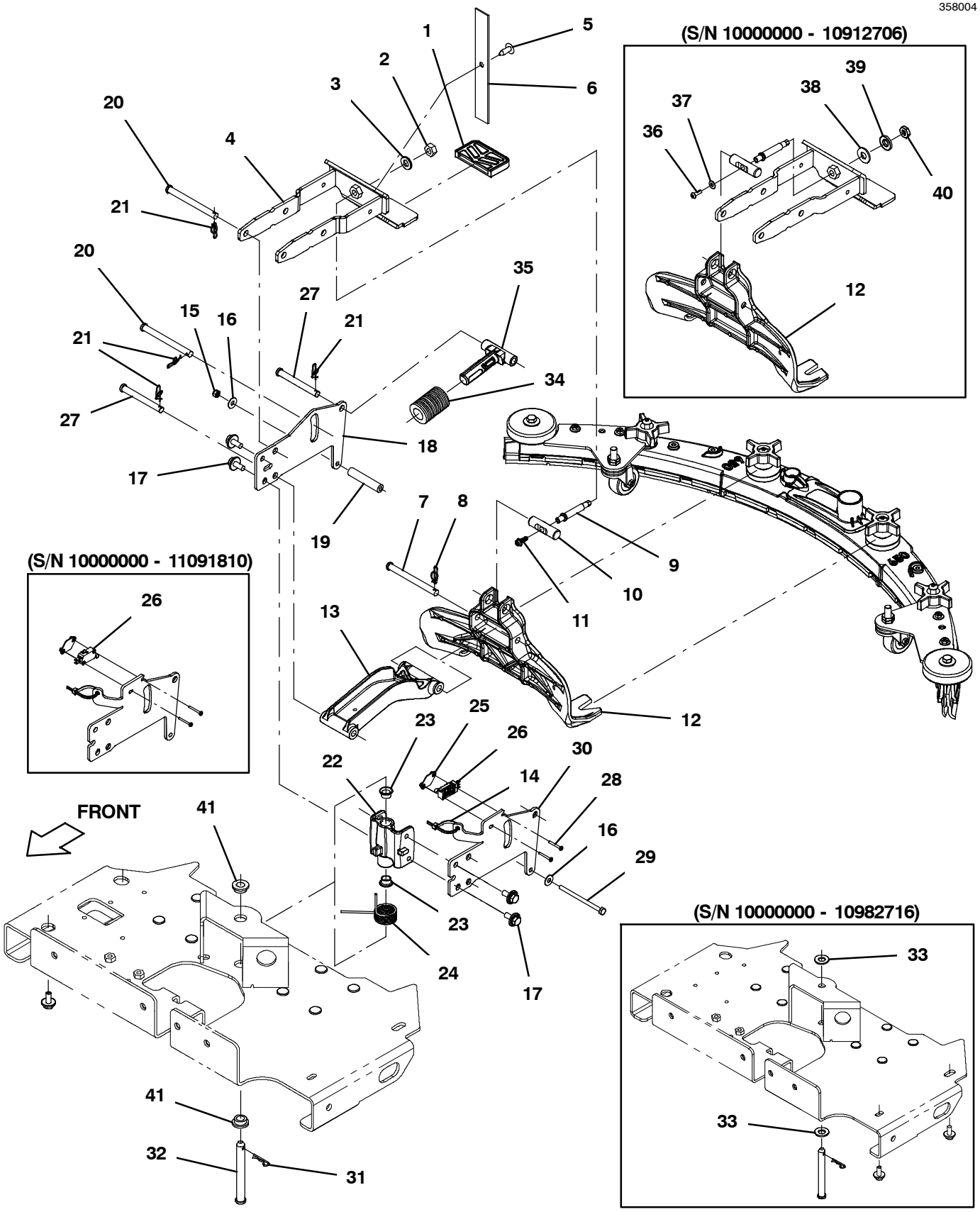

SQUEEGEE LIFT GROUP

	Ref.	Part No.	Serial Number	Description	Qty.
∇		9018374	(10000000- 20000000)	Kit, Sqge Lift [T600/T600e]	1
▲	1	1230670	(10000000- 20000000)	Cover, Pedal, Lift	1
▲	2	39312	(10907775- 20000000)	Nut, Hex, Std, M10 X 1.50	1
▲	3	1242993	(10907775- 20000000)	Washer, Lock, Ext, M10 [Nord- lock]	1
▲	4	9016840	(10000000- 20000000)	Arm, Lift, Sqge, Afmkt [T600,T600e] (With Label)	1
▲	5	140262	(10909657- 20000000)	Clip, Snap- In	1
▲	6	1059534	(10909657- 20000000)	Fastener, 09.00l [Hook & Loop]	1
▲	7	1243729	(10999247- 20000000)	Pin, Clevis, 0.37d X 4.00l [4000]	1
	7	49914	(10000000- 10999246)	Pin, Clevis, 0.37d X 4.00l (Replaced By 1243729)	1
▲	8	1216647	(10000000- 20000000)	Pin, Cotter, Hair, 0.38d .054 Wir	1
▲	9	1230714	(10000000- 20000000)	Shaft, Adjmt	1
▲	10	1230625	(10000000- 20000000)	Pin, 0.63d 02.2l, 1/.34h, 2cham	1
▲	11	1243034	(10912707- 20000000)	Bolt, Flange, M5- 0.8 X 16, 10.9 Pl	1
▲	12	1243462	(10999247- 20000000)	Mount, Sqge	1
	12	1242997	(10907775- 10999246)	Mount, Sqge (Replaced By 1243462)	1
	12	1231340	(10000000- 10907774)	Mount, Sqge (Replaced By 1243462)	1
▲	13	1243460	(10999247- 20000000)	Arm, Lower [Machined]	1
	13	1233229	(10000000- 10999246)	Arm, Lower [Machined] (Replaced By 1243460)	1
▲	14	130773	(10907775- 20000000)	Tie, Cable, Nyl, 11.0l, .14w, 3.0 Max. D	1
	14	1210807	(10000000- 10907774)	Wire, Tie [W/.25” Fir Tree Clip]	1
	15	08712	(10000000- 20000000)	Nut, Hex, Lock, M6 X 1.00, Nl, Ss	1
	16	01684	(10000000- 20000000)	Washer, Flat, 0.27b 0.69d .05, Ss	2
	17	1020341	(10000000- 20000000)	Screw, Hex, M8 X 1.25 X 20, Ss, Sems	4
	18	1231347	(10000000- 20000000)	Plate, Lift, Sqge, Rh	1
	19	1231343	(10000000- 20000000)	Tube, 0.26id 0.50od 02.6l, Stl, Pl	1
	20	49914	(10000000- 20000000)	Pin, Clevis, 0.37d X 4.00l	2
	21	1216647	(10000000- 20000000)	Pin, Cotter, Hair, 0.38d .054 Wir	3
∇	22	9016973	(10000000- 20000000)	Pivot Assy, Replmt, Sqge	1
▲	23	15648	(10000000- 20000000)	Bushing, Flng, 0.50b 0.59d 0.38l	2
	24	1231436	(10000000- 20000000)	Spring, Tors, 1.10id .13wir 05.5coil	1
	25	1013705	(10000000- 20000000)	Plate, Thread, Switch, M3 Nut, 96hr Pl	1
	26	1264508	(11091811- 20000000)	Switch, Micro, 0.1a, Spdt, Ip67, Au	1
	26	1215716	(10000000- 11091810)	Switch, 0.1a, Spdt[Micro, Gold Contacts] (Replaced By 9022813)	1
	27	57598	(10000000- 20000000)	Pin, Clevis, 0.37d X 3.25l	2
	28	33933	(10000000- 20000000)	Screw, Pan, Phl, M3 X 0.50 X 25, Ss	2
	29	06952	(10000000- 20000000)	Screw, Hex, M6 X 1.00 X 90, 8.8	1
	30	1231335	(10000000- 20000000)	Plate, Lift, Sqge, Lh	1
	31	44906	(10000000- 20000000)	Pin, Cotter, Hair, 0.38d .093 Wir	1
	32	1233450	(10000000- 20000000)	Pin, Clevis, 0.50d X 4.30l	1
	33	32486	(10000000- 10982716)	Washer, Flat, 0.53b 1.06d .10, Stl, Pl	2
	34	1253245	(10997580- 20000000)	Spring, Cmpr, 1.4od, .874id, .263d, 2.0l	1
	34	1228773	(10000000- 10997579)	Spring, Cmpr, 1.402od, .812id, 2.0l (Replaced By 1253245)	1
	35	1235860	(10000000- 20000000)	Guide, Spring	1
	36	1205799	(10000000- 10912706)	Screw, Btn, M5 X 0.8 X 16, 8.8, Nl, Torx	1
	37	01683	(10000000- 10912706)	Washer, Flat, 10, Ss	1
	38	01686	(10000000- 10907774)	Washer, Flat, 0.44b 1.00d .08, Ss	1
	39	41187	(10000000- 10907774)	Washer, Flat, Belleville, .38	1
	40	32716	(10000000- 10907774)	Nut, Hex, Jam, M10 X 1.5, Ss	1
	41	1251209	(10982717- 20000000)	Bushing, Flng, 0.50b 0.75d 0.38l	2

∇ ASSEMBLY

▲ INCLUDED IN ASSEMBLY

SQUEEGEE ASSEMBLY, 700MM / 28IN (Intended for 800MM Scrub Head Size) (New Style 9018627)

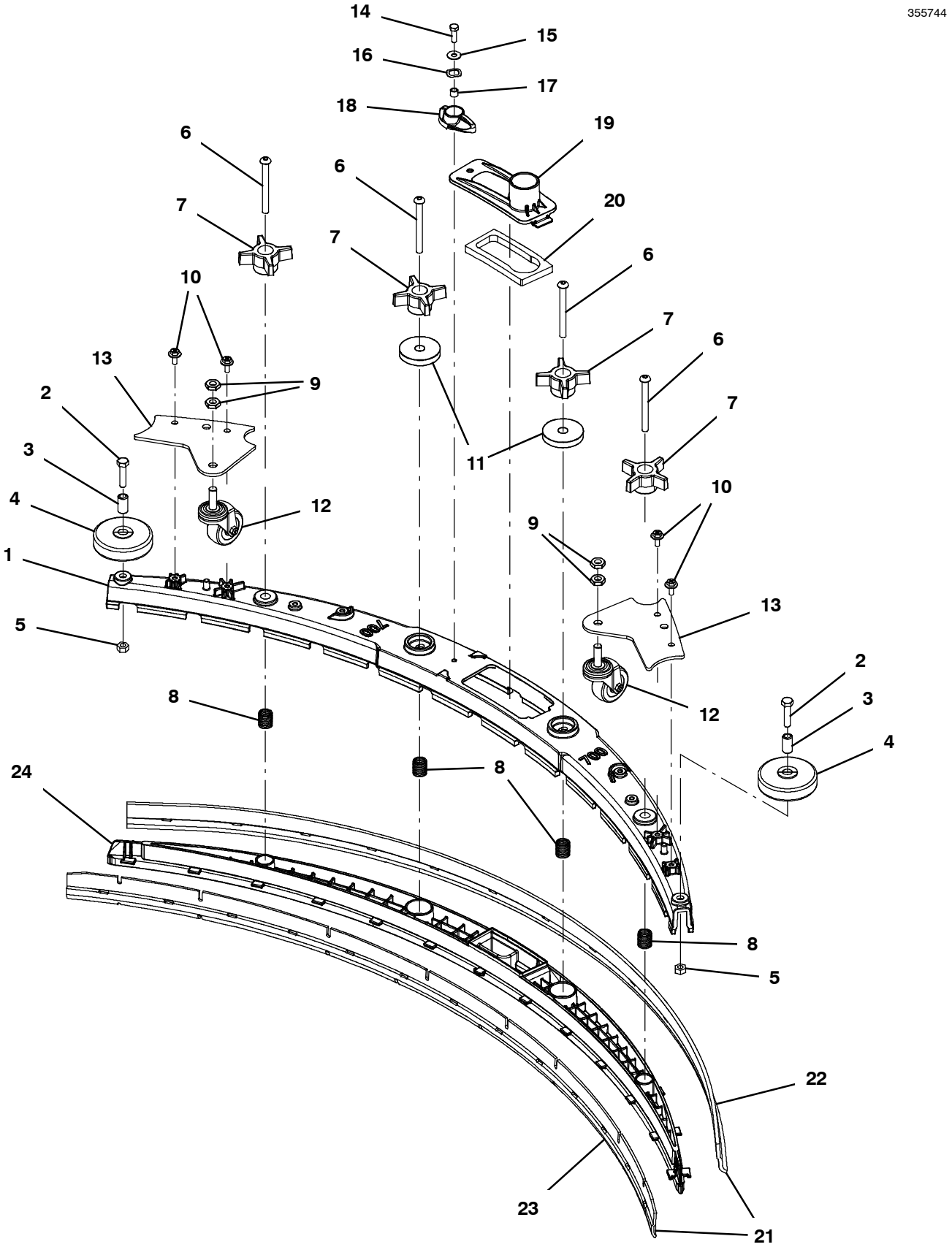

SQUEEGEE ASSEMBLY, 700MM / 28IN (Intended for 800MM Scrub Head Size) (New Style 9018627)

	Ref.	Part No.	Serial Number	Description	Qty.
∇		9018627	(10963180- 20000000)	Squeegee Kit, 700mm [T600]	1
▲	1	1241632	(10963180- 20000000)	Frame, Sqge, 70cm, Mach [T500/T600]	1
▲	2	59658	(10963180- 20000000)	Screw, Hex, M8 X 1.25 X 35, Nl, Ss	2
▲	3	222496	(10000000- 20000000)	Sleeve, P/M, 0.32b 0.50d 0.9l [430ss]	2
▲	4	222066	(10000000- 20000000)	Wheel, 03.0d 0.88w 0.50b	2
▲	5	07786	(10000000- 20000000)	Nut, Hex, Std, M8 X 1.25, Ss	2
▲	6	1255358	(10000000- 20000000)	Screw, Btn, M8 X 1.25 X 85, Ss	4
▲	7	1074204	(10000000- 20000000)	Knob,Star,2.75d 4ear 1.1l M8x1.25,Thru,Y	4
▲	8	22290	(10000000- 20000000)	Spring, Cmpr, 0.72od .06wir 02.3l	4
▲	9	32716	(10963180- 20000000)	Nut, Hex, Jam, M10 X 1.5, Ss	4
▲	10	1034731	(10963180- 20000000)	Screw, Hex, M6 X 1.00 X 16, Sems, Ss	4
▲	11	1243735	(10963180- 20000000)	Disc, Friction, Sqge	2
▲	12	4029759	(10000000- 20000000)	Caster, Swivel,	2
▲	13	1243364	(10963180- 20000000)	Plate, Caster, Sqge	2
▲	14	12277	(10000000- 20000000)	Screw, Hex, M6 X 1.00 X 20, Nl, Ss	1
▲	15	01684	(10000000- 20000000)	Washer, Flat, 0.27b 0.69d .05, Ss	1
▲	16	140060	(10000000- 20000000)	Washer, Wave- Spring, .505 .750 .045	1
▲	17	140154	(10000000- 20000000)	Sleeve, P/M, 0.25b 0.38d 0.3l, Pl	1
▲	18	1222109	(10000000- 20000000)	Knob, Sqge, 58l, M6 X 1.00, Plstc	1
▲	19	1209631	(10000000- 20000000)	Cover, Trap, Water, Sqge	1
▲	20	1210756	(10000000- 20000000)	Gasket, Trap, Water, Sqge	1
▲∇	21	9015737	(10000000- 20000000)	Blade Kit, 700mm, Linatex/Linard (Standard)	1
▲▲	22	1221572	(10000000- 20000000)	Blade, Sqge, Rear, 1204l, Linatex[700mm] (Standard)	1
▲▲	23	1232679	(10000000- 20000000)	Blade, Sqge, Front, 1148l Linard[700mm] (Standard)	1
▲	24	1220783	(10000000- 20000000)	Retainer, Sqge, 70cm [T500]	1
∇	21	9015738	(10000000- 20000000)	Blade Kit, 700mm, Urethane (Option)	1
▲	22	1228904	(10000000- 20000000)	Blade, Sqge, Rear, 1204l,Urethane[700mm] (Option)	1
▲	23	1228906	(10000000- 20000000)	Blade, Sqge, Front,1148l Urethane[700mm] (Option)	1
∇	21	9015736	(10000000- 20000000)	Blade Kit, 700mm, Gum (Option)	1
▲	22	1228905	(10000000- 20000000)	Blade, Sqge, Rear, 1204l, Gum[700mm] (Option)	1
▲	23	1228907	(10000000- 20000000)	Blade, Sqge, Front, 1148l Gum[700mm] (Option)	1

∇ ASSEMBLY

▲ INCLUDED IN ASSEMBLY

SQUEEGEE ASSEMBLY, 700MM / 28IN (Intended for 800MM Scrub Head Size) (Upgraded Style 9018086 - Replaced By 9018627)

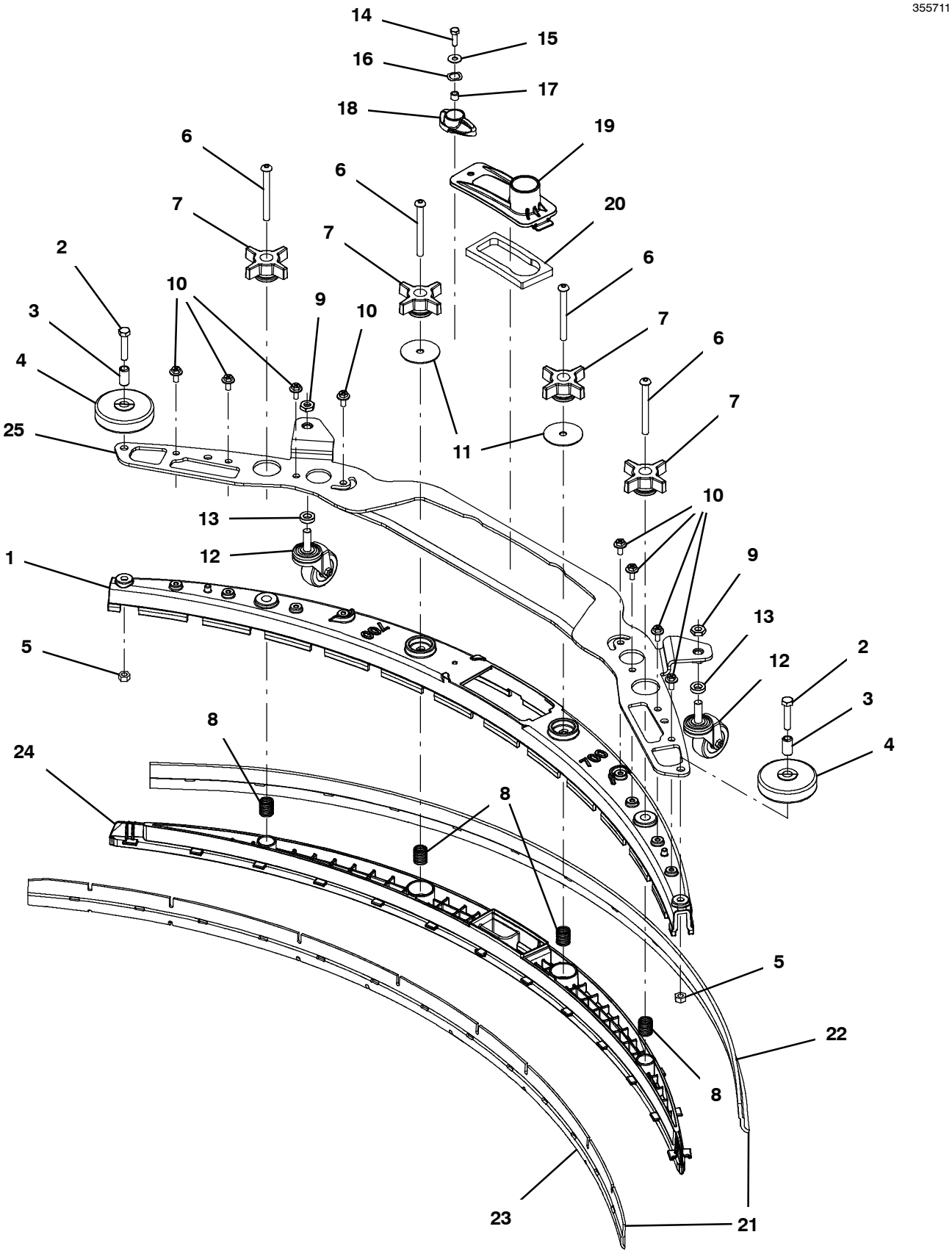

SQUEEGEE ASSEMBLY, 700MM / 28IN (Intended for 800MM Scrub Head Size) (Upgraded Style 9018086 - Replaced By 9018627)

	Ref.	Part No.	Serial Number	Description	Qty.
∇		9018086	(10000000- 10963179)	Squeegee Kit, 700mm (Replaced By 9018627)	1
▲	1	1220309	(10000000- 10963179)	Frame, Sqge, 70cm, Mach [T500] (Replaced By 9018627)	1
▲	2	74440	(10000000- 10963179)	Screw, Hex, M8 X 1.25 X 40, Nl, Ss	2
▲	3	222496	(10000000- 20000000)	Sleeve, P/M, 0.32b 0.50d 0.9l [430ss]	2
▲	4	222066	(10000000- 20000000)	Wheel, 03.0d 0.88w 0.50b	2
▲	5	07786	(10000000- 20000000)	Nut, Hex, Std, M8 X 1.25, Ss	2
▲	6	1255358	(10000000- 20000000)	Screw, Btn, M8 X 1.25 X 85, Ss	4
▲	7	1074204	(10000000- 20000000)	Knob,Star,2.75d 4ear 1.1l M8x1.25,Thru,Y	4
▲	8	22290	(10000000- 20000000)	Spring, Cmpr, 0.72od .06wir 02.3l	4
▲	9	32716	(10000000- 10963179)	Nut, Hex, Jam, M10 X 1.5, Ss	2
▲	10	1034731	(10000000- 10963179)	Screw, Hex, M6 X 1.00 X 16, Sems, Ss	8
▲	11	1243081	(10000000- 10963179)	Washer, Flat, 0.034b 2.00d .06, Plstc	2
▲	12	4029759	(10000000- 20000000)	Caster, Swivel,	2
▲	13	1242820	(10000000- 10963179)	Sleeve, .40b .75d .2l [304Ss]	2
▲	14	12277	(10000000- 20000000)	Screw, Hex, M6 X 1.00 X 20, Nl, Ss	1
▲	15	01684	(10000000- 20000000)	Washer, Flat, 0.27b 0.69d .05, Ss	1
▲	16	140060	(10000000- 20000000)	Washer, Wave- Spring, .505 .750 .045	1
▲	17	140154	(10000000- 20000000)	Sleeve, P/M, 0.25b 0.38d 0.3l, Pl	1
▲	18	1222109	(10000000- 20000000)	Knob, Sqge, 58l, M6 X 1.00, Plstc	1
▲	19	1209631	(10000000- 20000000)	Cover, Trap, Water, Sqge	1
▲	20	1210756	(10000000- 20000000)	Gasket, Trap, Water, Sqge	1
▲∇	21	9015737	(10000000- 20000000)	Blade Kit, 700mm, Linatex/Linard (Standard)	1
▲▲	22	1221572	(10000000- 20000000)	Blade, Sqge, Rear, 1204l, Linatex[700mm] (Standard)	1
▲▲	23	1232679	(10000000- 20000000)	Blade, Sqge, Front, 1148l Linard[700mm] (Standard)	1
▲	24	1220783	(10000000- 20000000)	Retainer, Sqge, 70cm [T500]	1
▲	25	1242196	(10000000- 10963179)	Plate Wldt, Mtg, Caster [700] (Replaced By 9018627)	2
∇	21	9015738	(10000000- 20000000)	Blade Kit, 700mm, Urethane (Option)	1
▲	22	1228904	(10000000- 20000000)	Blade, Sqge, Rear, 1204l,Urethane[700mm] (Option)	1
▲	23	1228906	(10000000- 20000000)	Blade, Sqge, Front,1148l Urethane[700mm] (Option)	1
∇	21	9015736	(10000000- 20000000)	Blade Kit, 700mm, Gum (Option)	1
▲	22	1228905	(10000000- 20000000)	Blade, Sqge, Rear, 1204l, Gum[700mm] (Option)	1
▲	23	1228907	(10000000- 20000000)	Blade, Sqge, Front, 1148l Gum[700mm] (Option)	1

∇ ASSEMBLY

▲ INCLUDED IN ASSEMBLY

SQUEEGEE ASSEMBLY, 700MM / 28IN (Intended for 800MM Scrub Head Size) (Original Style 9015302 - Replaced By 9018627)

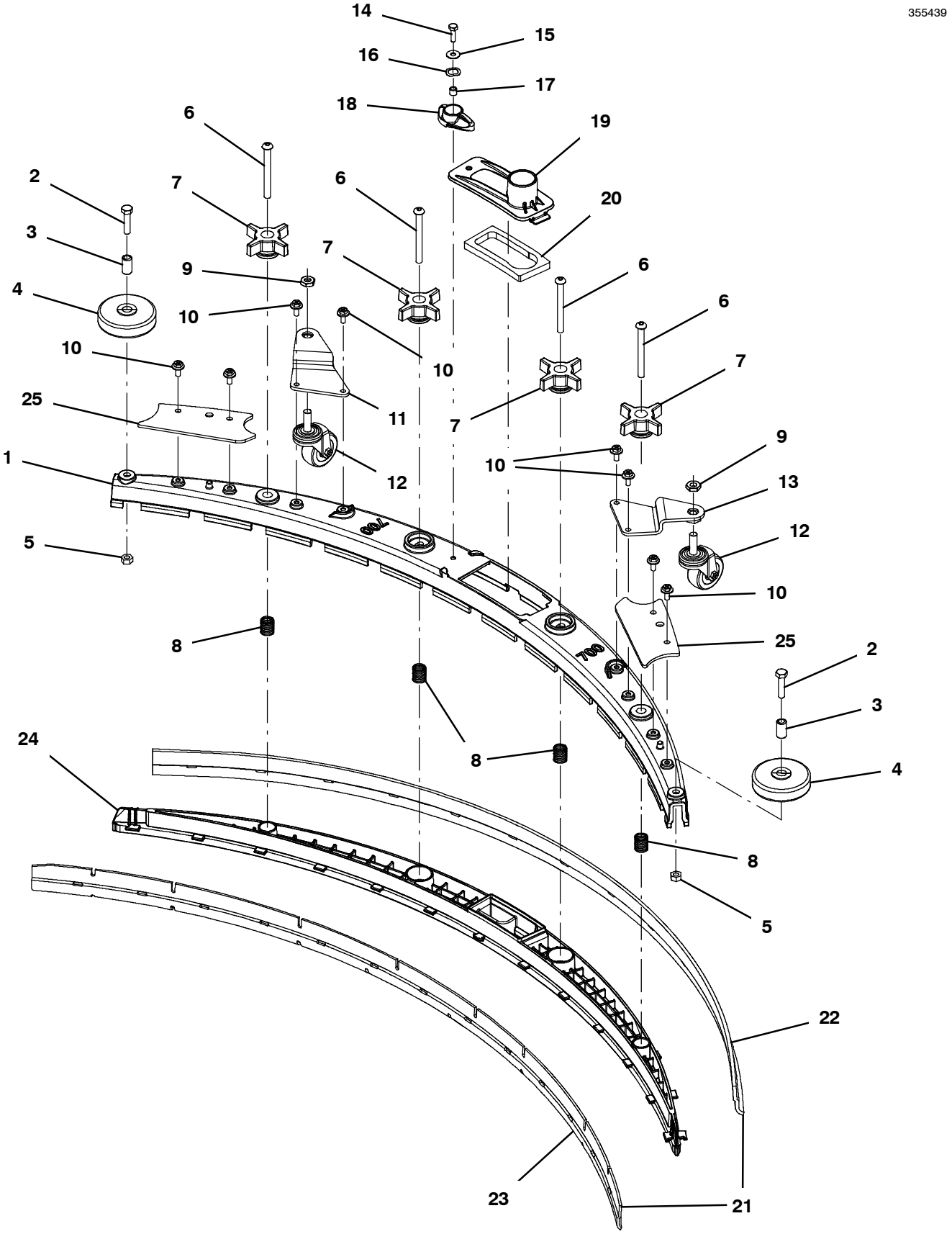

SQUEEGEE ASSEMBLY, 700MM / 28IN (Intended for 800MM Scrub Head Size) (Original Style 9015302 - Replaced By 9018627)

	Ref.	Part No.	Serial Number	Description	Qty.
∇		9015302	(10000000- xxxxxxxx)	Squeegee Kit, 700mm, Ci (Replaced By 9018627)	1
▲	1	1220309	(10000000- xxxxxxxx)	Frame, Sqge, 70cm, Mach [T500] (Replaced By 1241632)	1
▲	2	59658	(10000000- 20000000)	Screw, Hex, M8 X 1.25 X 35, Nl, Ss	2
▲	3	222496	(10000000- 20000000)	Sleeve, P/M, 0.32b 0.50d 0.9l [430ss]	2
▲	4	222066	(10000000- 20000000)	Wheel, 03.0d 0.88w 0.50b	2
▲	5	07786	(10000000- 20000000)	Nut, Hex, Std, M8 X 1.25, Ss	2
▲	6	1255358	(10000000- 20000000)	Screw, Btn, M8 X 1.25 X 85, Ss	4
▲	7	1074204	(10000000- 20000000)	Knob,Star,2.75d 4ear 1.1l M8x1.25,Thru,Y	4
▲	8	22290	(10000000- 20000000)	Spring, Cmpr, 0.72od .06wir 02.3l	4
▲	9	32716	(10000000- 20000000)	Nut, Hex, Jam, M10 X 1.5, Ss	2
▲	10	1034731	(10000000- 20000000)	Screw, Hex, M6 X 1.00 X 16, Sems, Ss	8
▲	11	1222236	(10000000- xxxxxxxx)	Bracket Wldt, Caster, Rh Sqge[T500]	1
▲	12	4029759	(10000000- 20000000)	Caster, Swivel,	2
▲	13	1222001	(10000000- xxxxxxxx)	Bracket Wldt, Caster, Lh Sqge [T500]	1
▲	14	12277	(10000000- 20000000)	Screw, Hex, M6 X 1.00 X 20, Nl, Ss	1
▲	15	01684	(10000000- 20000000)	Washer, Flat, 0.27b 0.69d .05, Ss	1
▲	16	140060	(10000000- 20000000)	Washer, Wave- Spring, .505 .750 .045	1
▲	17	140154	(10000000- 20000000)	Sleeve, P/M, 0.25b 0.38d 0.3l, Pl	1
▲	18	1222109	(10000000- 20000000)	Knob, Sqge, 58l, M6 X 1.00, Plstc	1
▲	19	1209631	(10000000- 20000000)	Cover, Trap, Water, Sqge	1
▲	20	1210756	(10000000- 20000000)	Gasket, Trap, Water, Sqge	1
▲∇	21	9015737	(10000000- 20000000)	Blade Kit, 700mm, Linatex/Linard (Standard)	1
▲▲	22	1221572	(10000000- 20000000)	Blade, Sqge, Rear, 1204l, Linatex[700mm] (Standard)	1
▲▲	23	1232679	(10000000- 20000000)	Blade, Sqge, Front, 1148l Linard[700mm] (Standard)	1
▲	24	1220783	(10000000- 20000000)	Retainer, Sqge, 70cm [T500]	1
▲	25	1230738	(10000000- xxxxxxxx)	Bracket, Sqge Bumper	2
∇	21	9015738	(10000000- 20000000)	Blade Kit, 700mm, Urethane (Option)	1
▲	22	1228904	(10000000- 20000000)	Blade, Sqge, Rear, 1204l,Urethane[700mm] (Option)	1
▲	23	1228906	(10000000- 20000000)	Blade, Sqge, Front,1148l Urethane[700mm] (Option)	1
∇	21	9015736	(10000000- 20000000)	Blade Kit, 700mm, Gum (Option)	1
▲	22	1228905	(10000000- 20000000)	Blade, Sqge, Rear, 1204l, Gum[700mm] (Option)	1
▲	23	1228907	(10000000- 20000000)	Blade, Sqge, Front, 1148l Gum[700mm] (Option)	1

∇ ASSEMBLY

▲ INCLUDED IN ASSEMBLY

STANDARD SOLUTION GROUP

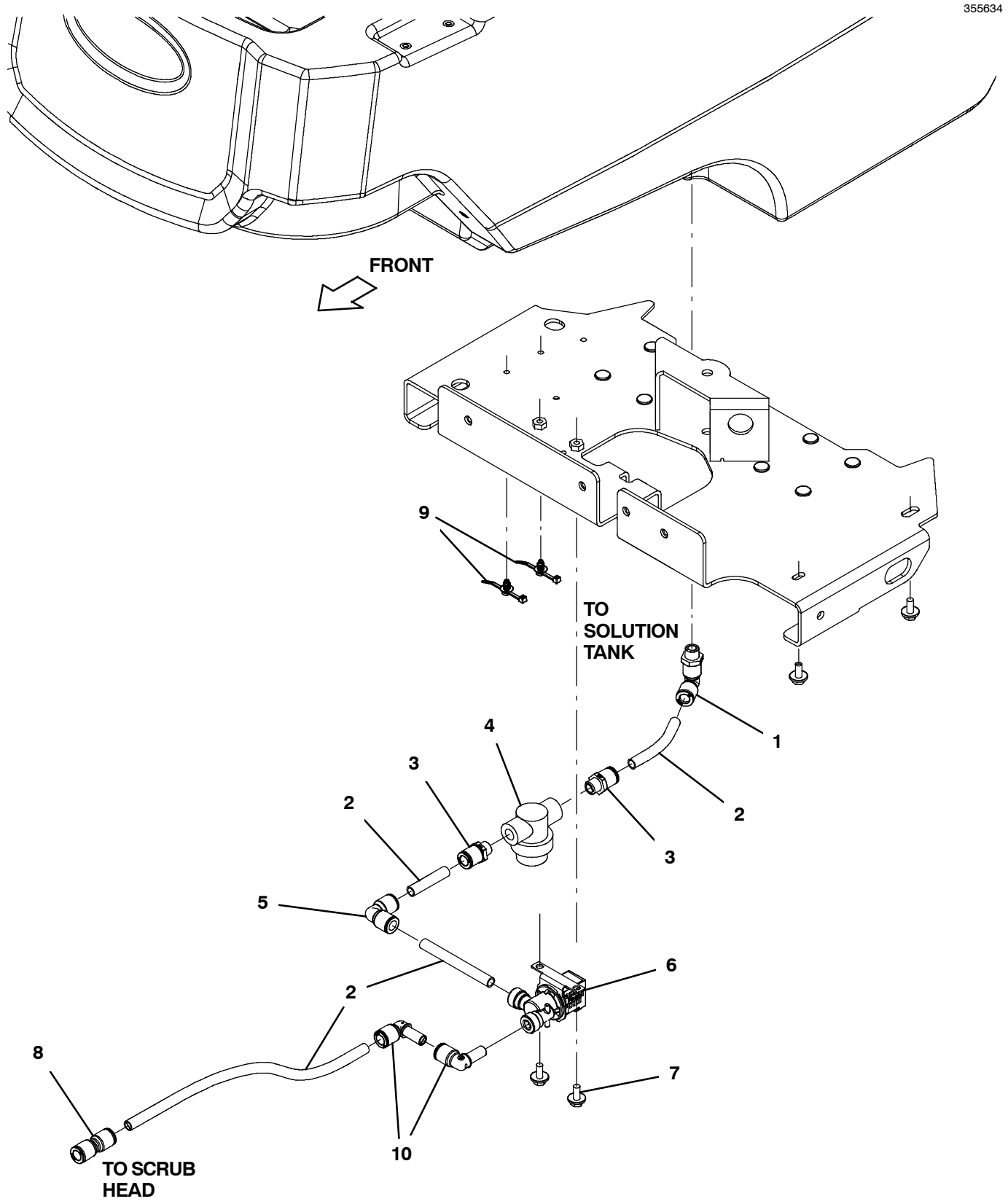

STANDARD SOLUTION GROUP

	Ref.	Part No.	Serial Number	Description	Qty.
	1	1243587	(10922118- 20000000)	Fitting, Brs, E90, Qf08/Pm06, Swivel	1
	1	1212987	(10000000- 10922117)	Fitting, Plstc, E90, Qf08/Pm06, Swivel (Replaced By 1243587)	1
	2	9014145	(10000000- 20000000)	Hose, Afmkt, Pe, .375id .50od, 05ft	1
	3	1212813	(10000000- 20000000)	Fitting, Plstc, Str, Qf08/Pm06	2
∇	4	1211537	(10000000- 20000000)	Filter, In- Line [80 Mesh, Fine, White]	1
▲		1218885	(10000000- 20000000)	Gasket [Epdm, F/1211537]	1
▲		1218883	(10000000- 20000000)	Screen, Fltr, 80 Mesh, Ss [Fine, White]	1
▲		613991	(10000000- 20000000)	Bowl, Clr, Short, F/1005302	1
	5	1221945	(10000000- 20000000)	Fitting, Plstc, E90, Qf08/Qf08	1
	6	1228697	(10000000- 20000000)	Valve, Water, Solenoid, 36vdc Qf08/Qf08	1
	7	1020341	(10000000- 20000000)	Screw, Hex, M8 X 1.25 X 20, Ss, Sems	2
	8	1212859	(10000000- 20000000)	Fitting, Plstc, Str, Qf08/Qf08	1
	9	1210807	(10000000- 20000000)	Wire, Tie [W/.25” Fir Tree Clip]	2
	10	1212809	(10000000- 20000000)	Fitting, Plstc, E90, Qf08/Qm08	2

∇ ASSEMBLY

▲ INCLUDED IN ASSEMBLY

BATTERY GROUP, WET 240AH

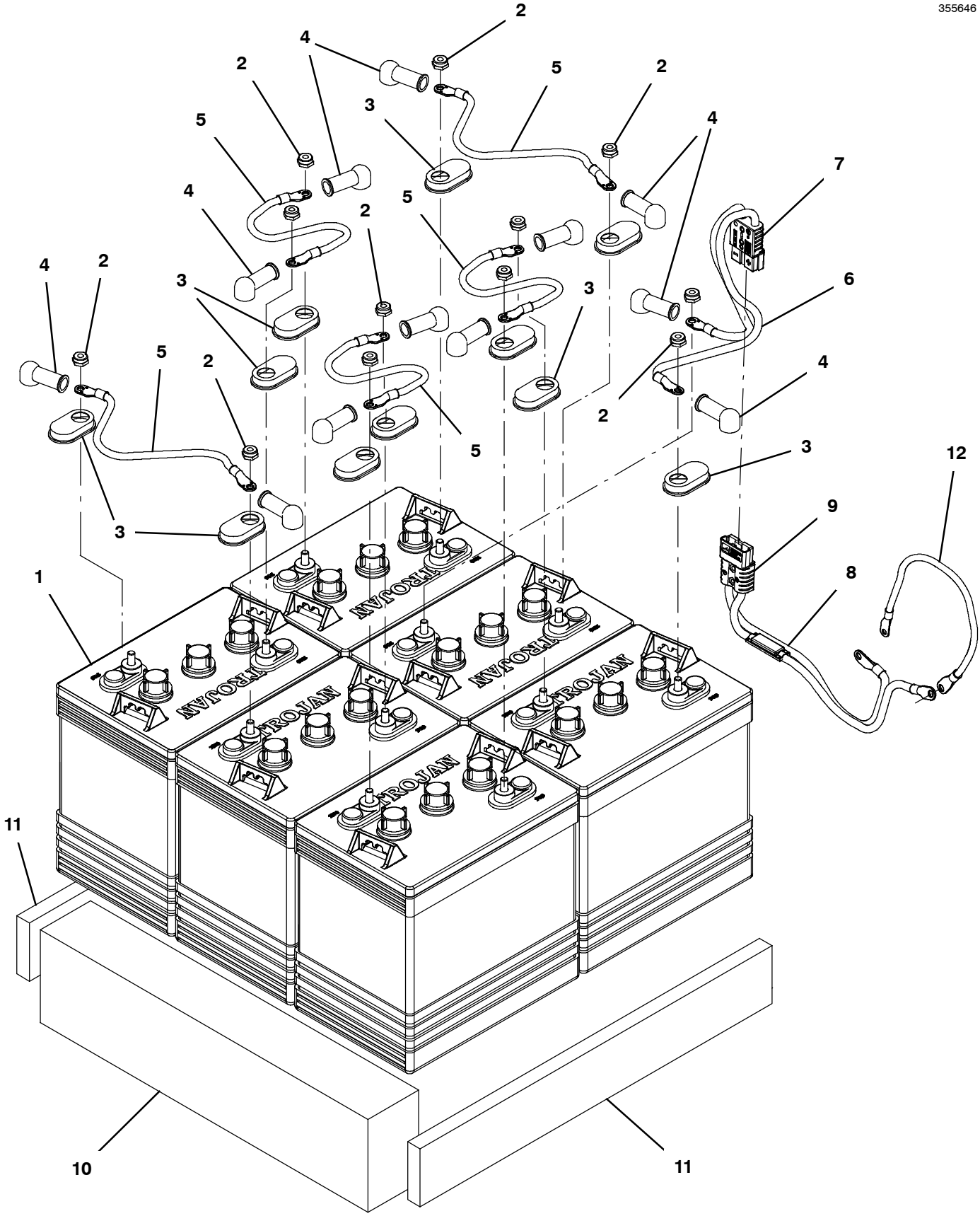

BATTERY GROUP, WET 240AH

	Ref.	Part No.	Serial Number	Description	Qty.
∇	1	222280	(10000000- 20000000)	Battery, Wet, 06vdc 0240ah	6
▲	2	87435	(10000000- 20000000)	Nut, Hex, Flexlock, .31- 18	2
	3	1041030	(10000000- 20000000)	Cap, Battery, Black [For 155ah]	12
	4	611221	(10000000- 20000000)	Boot, Terminal, Battery, 25.4mm, Blk	12
	5	63735	(10000000- 20000000)	Cable, 06ga 11.0l Blk .38ring /.38ring	5
∇	6	1075455	(10000000- 20000000)	Cable, Assy [T600, T600e]	1
▲	7	1238858	(10000000- 20000000)	Connector, Battery, Gray [Sb120 Grey]	1
∇	8	1075457	(10000000- 20000000)	Cable, Assy [T600,T600e, Ce]	1
▲	9	1238858	(10000000- 20000000)	Connector, Battery, Gray [Sb120 Grey]	1
	10	222474	(10000000- 20000000)	Spacer, Battery, Foam, 3.00 X 4.8 X 21.0	1
	11	222473	(10000000- 20000000)	Spacer, Battery, 0.75 X 3.0 X 21.0	2
	12	1074945	(10000000- 20000000)	Cable, 04ga 15.0l Red [M8 Ring/M6 Ring] (T600 Model)	1

∇ ASSEMBLY

▲ INCLUDED IN ASSEMBLY

SHROUD GROUP, DISK

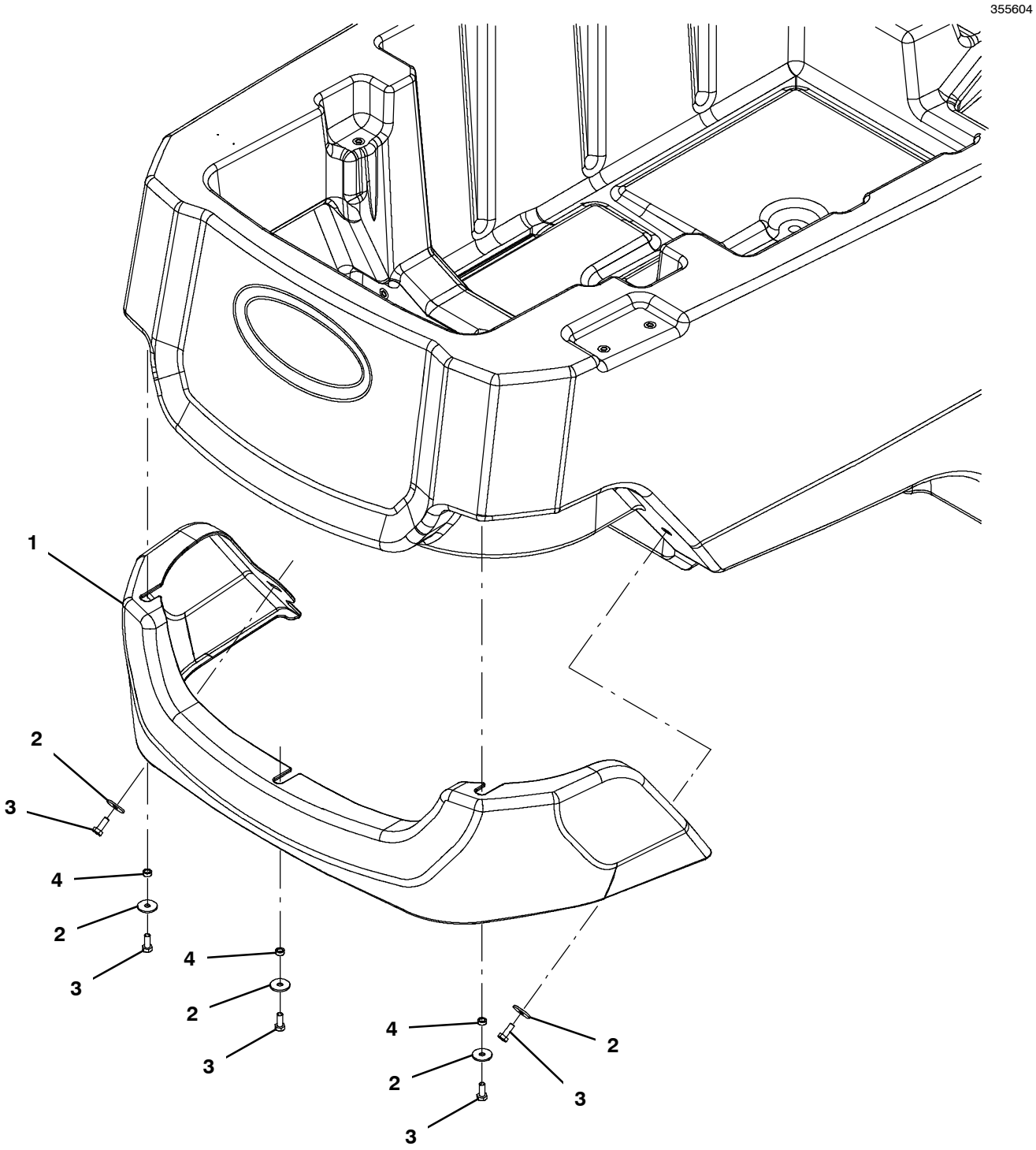

Ref.	Part No.	Serial Number	Description	Qty.
1	1226928	(10000000- 20000000)	Cover, Head, Disc [T600]	1
2	019680127	(10000000- 20000000)	Washer, Flat, 6.2mm Id X 22.0mm Od X 1.9	5
3	11329	(10000000- 20000000)	Screw, Hex, M6 X 1.00 X 16, Nl, Ss	5
4	80491	(10000000- 20000000)	Sleeve, P/M, 0.25b 0.38d 0.2l [430ss]	3

STANDARD LABEL GROUP

355694

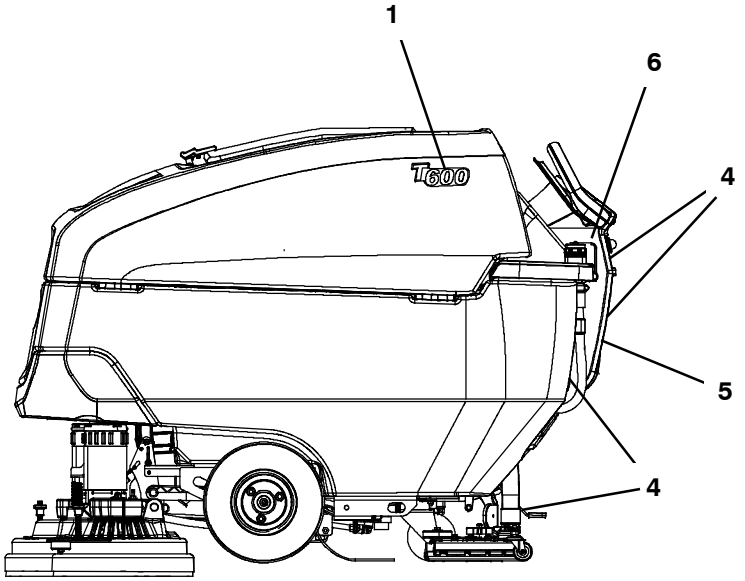

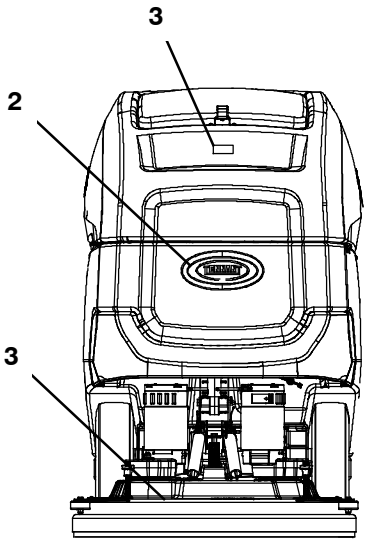

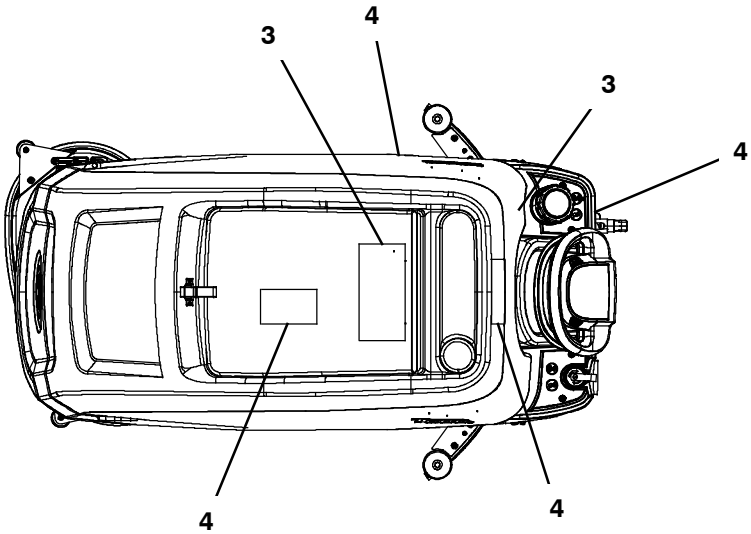

Ref.	Part No.	Serial Number	Description	Qty.
1	1231360	(10000000- 20000000)	Label, Logo, [T600]	2
2	1231367	(10000000- 20000000)	Label, Logo, 7.00l, Blk/Stl [Tennant]	1
3	1220962	(10000000- 20000000)	Label Sheet, Info/Hzrd [T500, Na]	1
4	1263144	(11078603- 20000000)	Label Sheet, Operational [T600/T600e]	1
4	1234509	(10000000- 11078602)	Label Sheet, Operational [T600/T600e]	1
5	1225763	(10000000- 20000000)	Label, Decal, Charger, Off- Board	1
6	08823	(10000000- 20000000)	Label, Letters, 5.0 X 5.0 [Ee]	2

HARNESS GROUP

	Ref.	Part No.	Serial Number		Description	Qty.
∇		1265414	(11091811- 20000000	)	Harness, Main, Ele [T600]	1
▲		222290	(10000000- 20000000	)	Diode, Ele, Plug	4
∇		1076906	(11011872- 11091810	)	Harness, Main, Ele [T600] (Replaced By 1265414)	1
▲		222290	(10000000- 20000000	)	Diode, Ele, Plug	4
∇		1075520	(10000000- 11011871	)	Harness, Main, Ele [T600]	1
▲		222290	(10000000- 20000000	)	Diode, Ele, Plug	4
		1077062	(11085062- 20000000	)	Harness, Ele [Op. Station, T600]	1
		1075519	(10000000- 11085061	)	Harness, Ele [Op. Station, T600] (Replaced By 1077062)	1
		1075585	(10000000- 20000000	)	Harness, Ele [Motor Rev., Molex Mx150l] (Bail Switch)	1

∇ ASSEMBLY

▲ INCLUDED IN ASSEMBLY

MANUAL BATTERY WATERING SYSTEM
(S/N 11011759 -)

355813

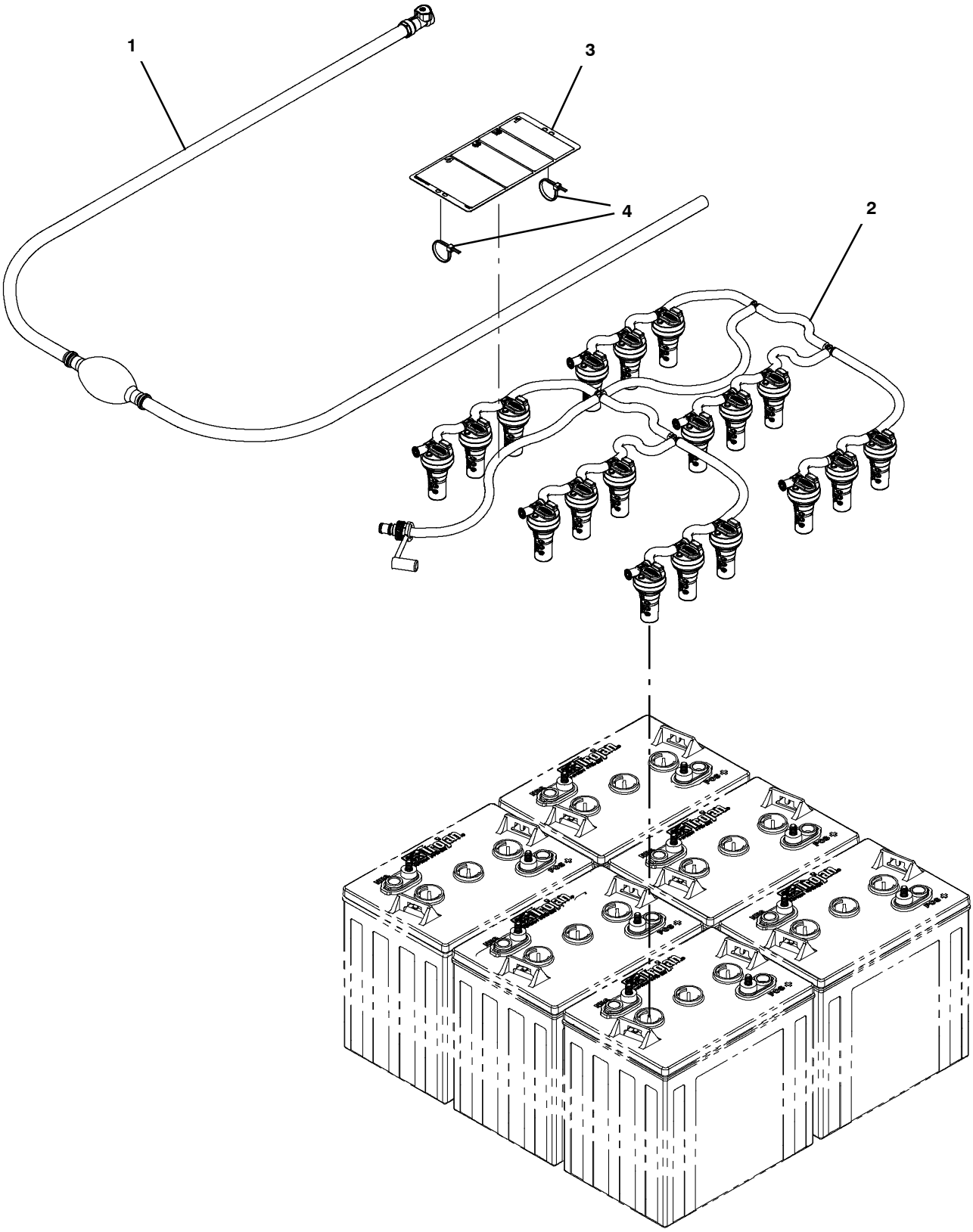

MANUAL BATTERY WATERING SYSTEM
(S/N 11011759 -)

	Ref.	Part No.	Serial Number	Description	Qty.
∇		9045074*	(11011759- 20000000)	Fill Kit, 6 Btry, Mnl, Ci [Trojan]	1
▲	1	1236295	(11011759- 20000000)	Pump, Hand, Battery	1
▲	2	1248178	(11011759- 20000000)	Distribution Assy, Water, Battery	1
▲	3	1253250	(11011759- 20000000)	Label, Tag, Battery [Bwt Watering]	1
▲	4	130773	(10000000- 20000000)	Tie, Cable, Nyl, 11.0l, .14w, 3.0 Max. D	2

*THIS KIT IS INTENDED FOR USE WITH TROJAN® LEAD ACID BATTERIES ONLY.

HYDROLINK® IS A REGISTERED TRADEMARK OF TROJAN BATTERY COMPANY.

∇ ASSEMBLY

▲ INCLUDED IN ASSEMBLY

HYDROLINK® MANUAL BATTERY WATERING KIT (S/N 10000000 - 11011758)

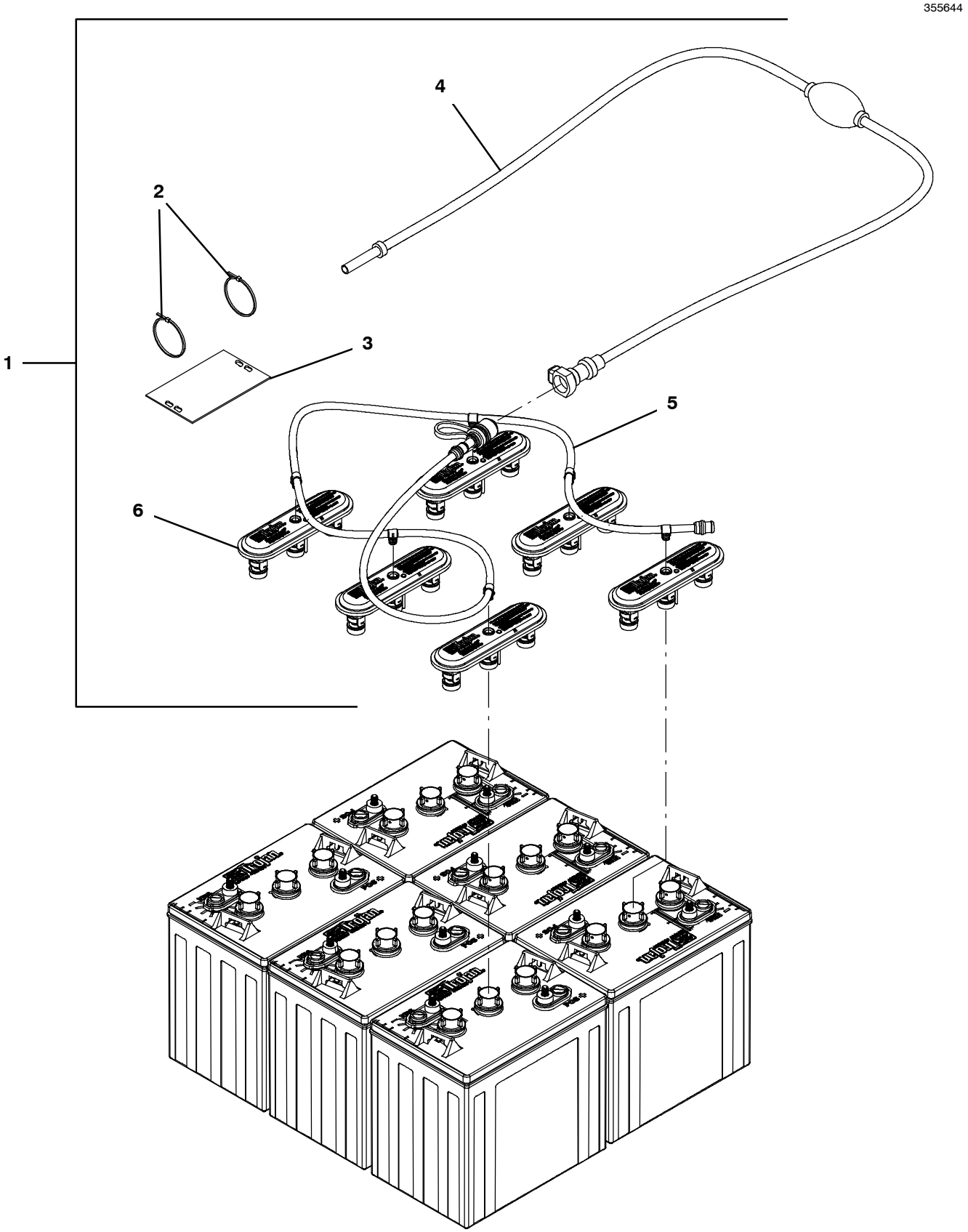

HYDROLINK® MANUAL BATTERY WATERING KIT (S/N 10000000 - 11011758)

	Ref.	Part No.	Serial Number	Description	Qty.
∇	1	9010301*	(10000000- 11011758)	Battery Fill Kit, 36v, Ci [Hydrolink] (Replaced By 9045074)	1
▲	2	130773	(10000000- 20000000)	Tie, Cable, Nyl, 11.0l, .14w, 3.0 Max. D	2
▲	3	1071084	(10000000- 11011758)	Label, Tag, Battery [Hydrolink Watering]	1
▲	4	1058939	(10000000- 11011758)	Pump Kit, Fill, Battery	1
▲	5	1201997	(10000000- 11011758)	Tube, Water, Battery, 36vdc [Trojan]	1
▲	6	1204142	(10000000- 11011758)	Cap, Fill, Battery [Trojan]	6

*THIS KIT IS INTENDED FOR USE WITH TROJAN® LEAD ACID BATTERIES ONLY.

HYDROLINK® IS A REGISTERED TRADEMARK OF TROJAN BATTERY COMPANY.

∇ ASSEMBLY

▲ INCLUDED IN ASSEMBLY

NARROW AISLE SQUEEGEE ASSEMBLY, 650MM / 26IN
(New Style 9018626)

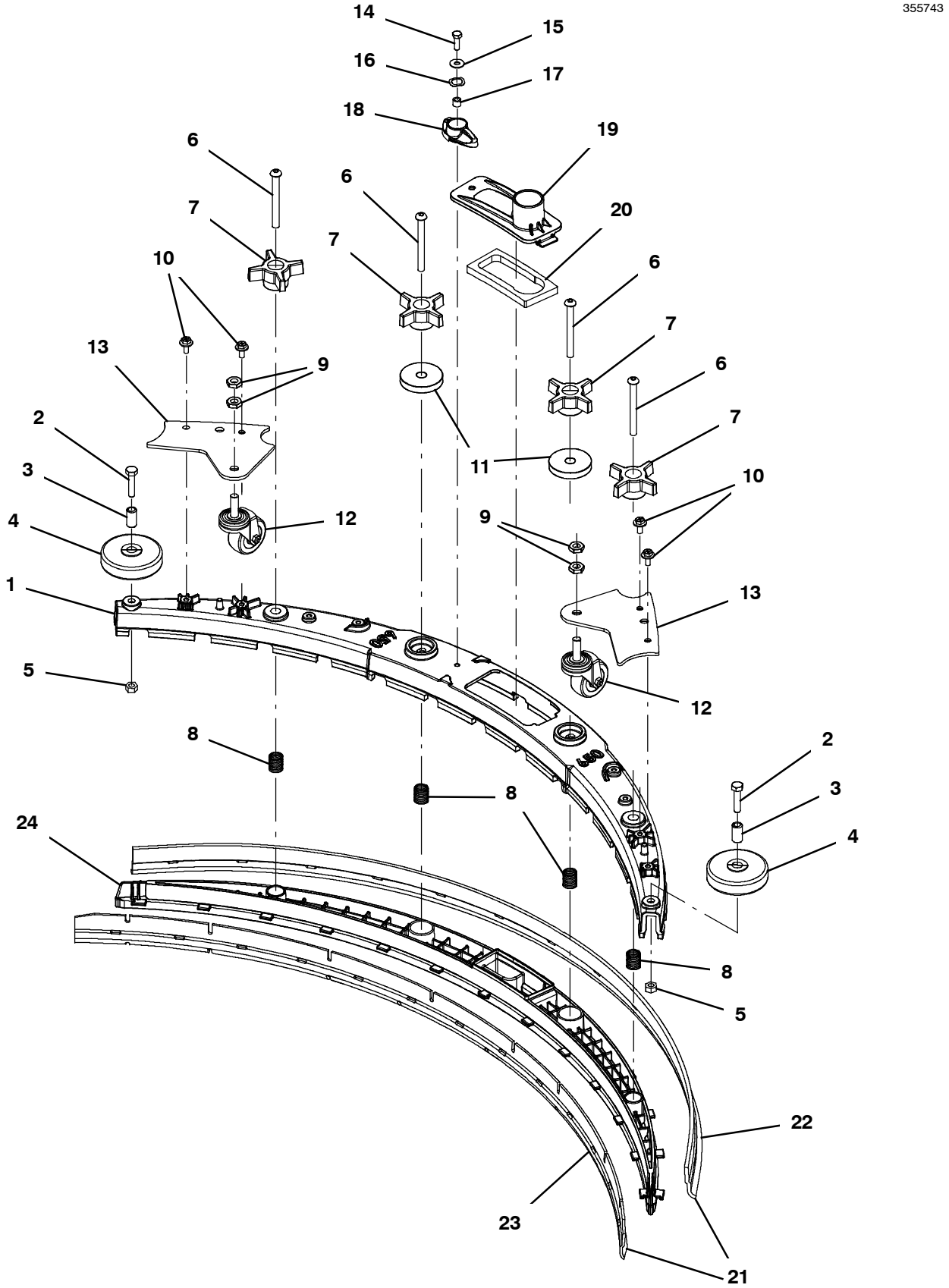

NARROW AISLE SQUEEGEE ASSEMBLY, 650MM / 26IN
(New Style 9018626)

	Ref.	Part No.	Serial Number	Description	Qty.
∇		9018626	(10964903- 20000000)	Squeegee Kit, 650mm [T600]	1
▲	1	1243537	(10964903- 20000000)	Frame, Sqge, 65cm, Mach [T500/T600]	1
▲	2	59658	(10964903- 20000000)	Screw, Hex, M8 X 1.25 X 35, Nl, Ss	2
▲	3	222496	(10000000- 20000000)	Sleeve, P/M, 0.32b 0.50d 0.9l [430ss]	2
▲	4	222066	(10000000- 20000000)	Wheel, 03.0d 0.88w 0.50b	2
▲	5	07786	(10000000- 20000000)	Nut, Hex, Std, M8 X 1.25, Ss	2
▲	6	1255358	(10000000- 20000000)	Screw, Btn, M8 X 1.25 X 85, Ss	4
▲	7	1074204	(10000000- 20000000)	Knob,Star,2.75d 4ear 1.1l M8x1.25,Thru,Y	4
▲	8	22290	(10000000- 20000000)	Spring, Cmpr, 0.72od .06wir 02.3l	4
▲	9	32716	(10964903- 20000000)	Nut, Hex, Jam, M10 X 1.5, Ss	4
▲	10	1034731	(10964903- 20000000)	Screw, Hex, M6 X 1.00 X 16, Sems, Ss	4
▲	11	1243735	(10964903- 20000000)	Disc, Friction, Sqge	2
▲	12	4029759	(10000000- 20000000)	Caster, Swivel,	2
▲	13	1243364	(10964903- 20000000)	Plate, Caster, Sqge	2
▲	14	12277	(10000000- 20000000)	Screw, Hex, M6 X 1.00 X 20, Nl, Ss	1
▲	15	01684	(10000000- 20000000)	Washer, Flat, 0.27b 0.69d .05, Ss	1
▲	16	140060	(10000000- 20000000)	Washer, Wave- Spring, .505 .750 .045	1
▲	17	140154	(10000000- 20000000)	Sleeve, P/M, 0.25b 0.38d 0.3l, Pl	1
▲	18	1222109	(10000000- 20000000)	Knob, Sqge, 58l, M6 X 1.00, Plstc	1
▲	19	1209631	(10000000- 20000000)	Cover, Trap, Water, Sqge	1
▲	20	1210756	(10000000- 20000000)	Gasket, Trap, Water, Sqge	1
▲∇	21	9015734	(10000000- 20000000)	Blade Kit, 650mm, Linatex/Linard (Standard)	1
▲▲	22	1221585	(10000000- 20000000)	Blade, Sqge, Rear, 1166l, Linatex[650mm] (Standard)	1
▲▲	23	1232680	(10000000- 20000000)	Blade, Sqge, Front, 1072l Linard[650mm] (Standard)	1
▲	24	1221260	(10000000- 20000000)	Retainer, Sqge, 65cm [T500]	1
∇	21	9015735	(10000000- 20000000)	Blade Kit, 650mm, Urethane (Option)	1
▲	22	1228909	(10000000- 20000000)	Blade, Sqge, Rear, 1136l,Urethane[650mm] (Option)	1
▲	23	1228915	(10000000- 20000000)	Blade, Sqge, Front,1072l,Urethane[650mm] (Option)	1
∇	21	9015733	(10000000- 20000000)	Blade Kit, 650mm, Gum (Option)	1
▲	22	1228910	(10000000- 20000000)	Blade, Sqge, Rear, 1136l, Gum[650mm] (Option)	1
▲	23	1228919	(10000000- 20000000)	Blade, Sqge, Front, 1072l Gum[650mm] (Option)	1

∇ ASSEMBLY

▲ INCLUDED IN ASSEMBLY

NARROW AISLE SQUEEGEE ASSEMBLY, 650MM / 26IN
(Upgraded Style 9018098 - Replaced By 9018626)

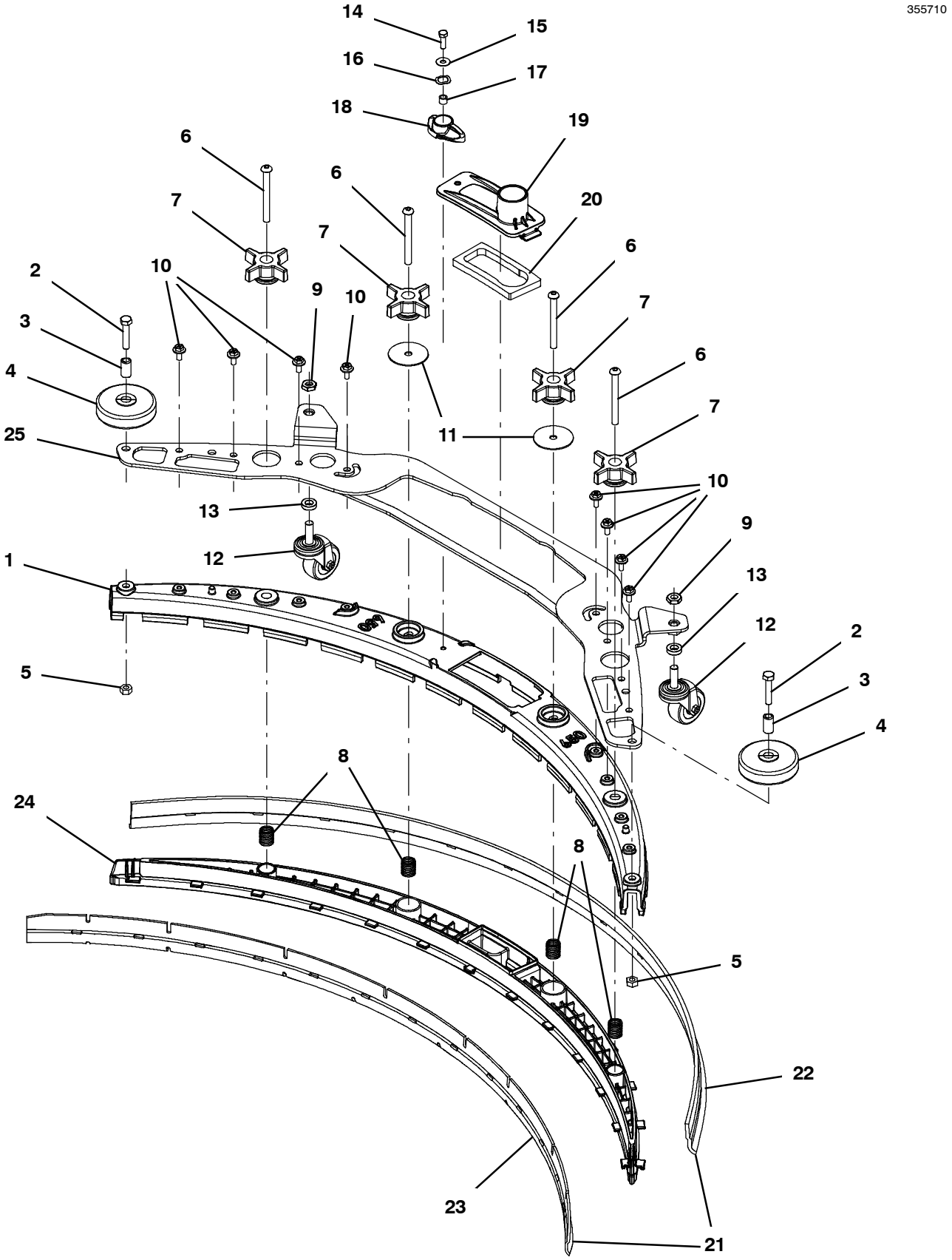

NARROW AISLE SQUEEGEE ASSEMBLY, 650MM / 26IN (Upgraded Style 9018098 - Replaced By 9018626)

	Ref.	Part No.	Serial Number	Description	Qty.
∇		9018098	(10000000- 10964902)	Squeegee Kit, 650mm (Replaced By 9018626)	1
▲	1	1221259	(10000000- 10964902)	Frame, Sqge, 65cm, Mach [T500] (Replaced By 9018626)	1
▲	2	74440	(10000000- 10964902)	Screw, Hex, M8 X 1.25 X 40, Nl, Ss	2
▲	3	222496	(10000000- 20000000)	Sleeve, P/M, 0.32b 0.50d 0.9l [430ss]	2
▲	4	222066	(10000000- 20000000)	Wheel, 03.0d 0.88w 0.50b	2
▲	5	07786	(10000000- 20000000)	Nut, Hex, Std, M8 X 1.25, Ss	2
▲	6	1255358	(10000000- 20000000)	Screw, Btn, M8 X 1.25 X 85, Ss	4
▲	7	1074204	(10000000- 20000000)	Knob,Star,2.75d 4ear 1.1l M8x1.25,Thru,Y	4
▲	8	22290	(10000000- 20000000)	Spring, Cmpr, 0.72od .06wir 02.3l	4
▲	9	32716	(10000000- 10964902)	Nut, Hex, Jam, M10 X 1.5, Ss	2
▲	10	1034731	(10000000- 10964902)	Screw, Hex, M6 X 1.00 X 16, Sems, Ss	8
▲	11	1243081	(10000000- 10964902)	Washer, Flat, 0.034b 2.00d .06, Plstc	2
▲	12	4029759	(10000000- 20000000)	Caster, Swivel,	2
▲	13	1242820	(10000000- 10964902)	Sleeve, .40b .75d .2l [304Ss]	2
▲	14	12277	(10000000- 20000000)	Screw, Hex, M6 X 1.00 X 20, Nl, Ss	1
▲	15	01684	(10000000- 20000000)	Washer, Flat, 0.27b 0.69d .05, Ss	1
▲	16	140060	(10000000- 20000000)	Washer, Wave- Spring, .505 .750 .045	1
▲	17	140154	(10000000- 20000000)	Sleeve, P/M, 0.25b 0.38d 0.3l, Pl	1
▲	18	1222109	(10000000- 20000000)	Knob, Sqge, 58l, M6 X 1.00, Plstc	1
▲	19	1209631	(10000000- 20000000)	Cover, Trap, Water, Sqge	1
▲	20	1210756	(10000000- 20000000)	Gasket, Trap, Water, Sqge	1
▲∇	21	9015734	(10000000- 20000000)	Blade Kit, 650mm, Linatex/Linard (Standard)	1
▲▲	22	1221585	(10000000- 20000000)	Blade, Sqge, Rear, 1166l, Linatex[650mm] (Standard)	1
▲▲	23	1232680	(10000000- 20000000)	Blade, Sqge, Front, 1072l Linard[650mm] (Standard)	1
▲	24	1221260	(10000000- 20000000)	Retainer, Sqge, 65cm [T500]	1
▲	25	1242364	(10000000- 10964902)	Plate Wldt, Mtg, Caster [650] (Replaced By 9018626)	2
∇	21	9015735	(10000000- 20000000)	Blade Kit, 650mm, Urethane (Option)	1
▲	22	1228909	(10000000- 20000000)	Blade, Sqge, Rear, 1136l,Urethane[650mm] (Option)	1
▲	23	1228915	(10000000- 20000000)	Blade, Sqge, Front,1072l,Urethane[650mm] (Option)	1
∇	21	9015733	(10000000- 20000000)	Blade Kit, 650mm, Gum (Option)	1
▲	22	1228910	(10000000- 20000000)	Blade, Sqge, Rear, 1136l, Gum[650mm] (Option)	1
▲	23	1228919	(10000000- 20000000)	Blade, Sqge, Front, 1072l Gum[650mm] (Option)	1

∇ ASSEMBLY

▲ INCLUDED IN ASSEMBLY

NARROW AISLE SQUEEGEE ASSEMBLY, 650MM / 26IN
(Original Style 9015301 - Replaced By 9018626)

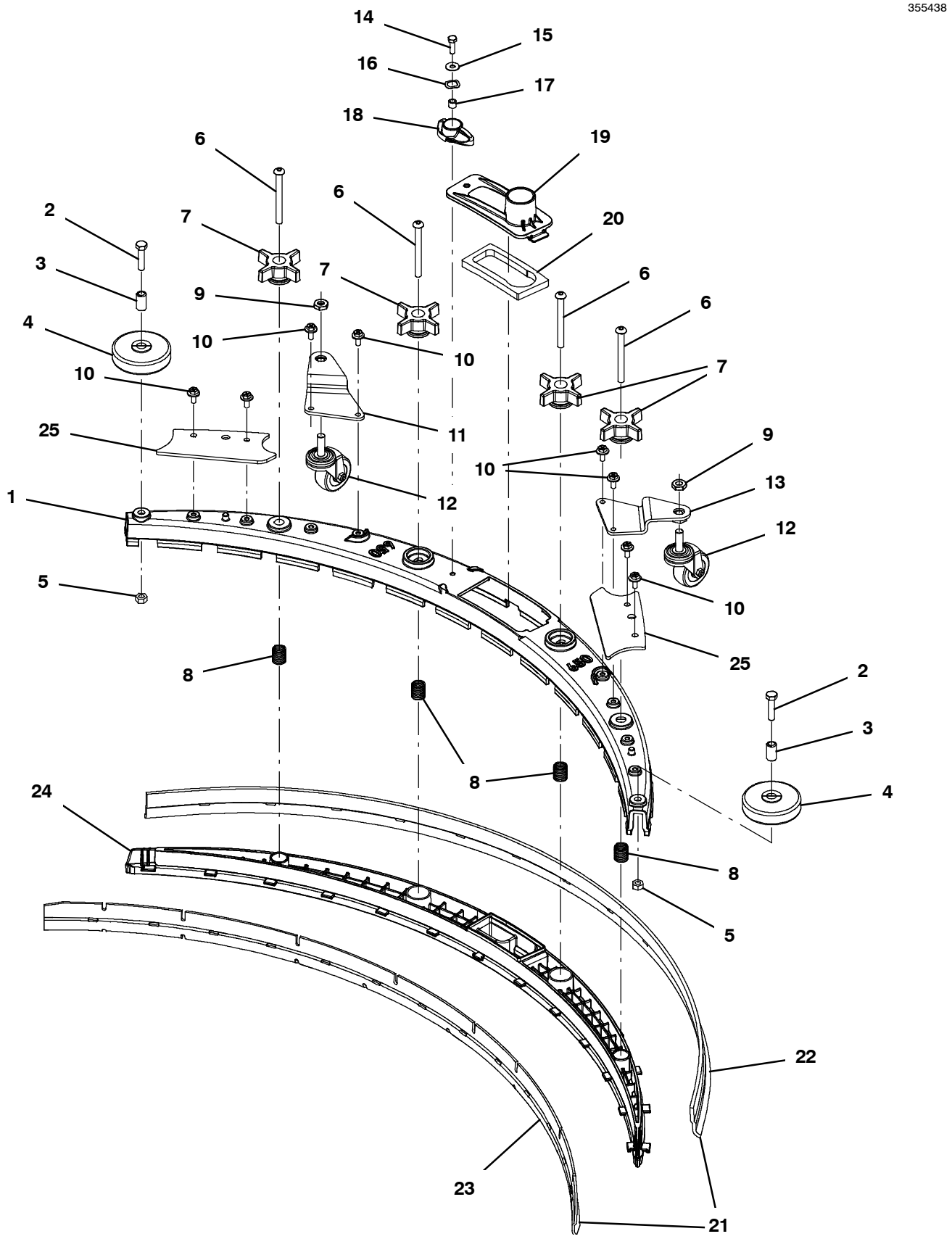

NARROW AISLE SQUEEGEE ASSEMBLY, 650MM / 26IN
(Original Style 9015301 - Replaced By 9018626)

	Ref.	Part No.	Serial Number	Description	Qty.
∇		9015301	(10000000- xxxxxxxx)	Squeegee Kit, 650mm, Ci (Replaced By 9018626)	1
▲	1	1221259	(10000000- xxxxxxxx)	Frame, Sqge, 65cm, Mach [T500] (Replaced By 1243537)	1
▲	2	59658	(10000000- 20000000)	Screw, Hex, M8 X 1.25 X 35, Nl, Ss	2
▲	3	222496	(10000000- 20000000)	Sleeve, P/M, 0.32b 0.50d 0.9l [430ss]	2
▲	4	222066	(10000000- 20000000)	Wheel, 03.0d 0.88w 0.50b	2
▲	5	07786	(10000000- 20000000)	Nut, Hex, Std, M8 X 1.25, Ss	2
▲	6	1255358	(10000000- 20000000)	Screw, Btn, M8 X 1.25 X 85, Ss	4
▲	7	1074204	(10000000- 20000000)	Knob,Star,2.75d 4ear 1.1l M8x1.25,Thru,Y	4
▲	8	22290	(10000000- 20000000)	Spring, Cmpr, 0.72od .06wir 02.3l	4
▲	9	32716	(10000000- 20000000)	Nut, Hex, Jam, M10 X 1.5, Ss	2
▲	10	1034731	(10000000- 20000000)	Screw, Hex, M6 X 1.00 X 16, Sems, Ss	8
▲	11	1222236	(10000000- xxxxxxxx)	Bracket Wldt, Caster, Rh Sqge[T500]	1
▲	12	4029759	(10000000- 20000000)	Caster, Swivel,	2
▲	13	1222001	(10000000- xxxxxxxx)	Bracket Wldt, Caster, Lh Sqge [T500]	1
▲	14	12277	(10000000- 20000000)	Screw, Hex, M6 X 1.00 X 20, Nl, Ss	1
▲	15	01684	(10000000- 20000000)	Washer, Flat, 0.27b 0.69d .05, Ss	1
▲	16	140060	(10000000- 20000000)	Washer, Wave- Spring, .505 .750 .045	1
▲	17	140154	(10000000- 20000000)	Sleeve, P/M, 0.25b 0.38d 0.3l, Pl	1
▲	18	1222109	(10000000- 20000000)	Knob, Sqge, 58l, M6 X 1.00, Plstc	1
▲	19	1209631	(10000000- 20000000)	Cover, Trap, Water, Sqge	1
▲	20	1210756	(10000000- 20000000)	Gasket, Trap, Water, Sqge	1
▲∇	21	9015734	(10000000- 20000000)	Blade Kit, 650mm, Linatex/Linard (Standard)	1
▲▲	22	1221585	(10000000- 20000000)	Blade, Sqge, Rear, 1166l, Linatex[650mm] (Standard)	1
▲▲	23	1232680	(10000000- 20000000)	Blade, Sqge, Front, 1072l Linard[650mm] (Standard)	1
▲	24	1221260	(10000000- 20000000)	Retainer, Sqge, 65cm [T500]	1
▲	25	1230738	(10000000- xxxxxxxx)	Bracket, Sqge Bumper	2
∇	21	9015735	(10000000- 20000000)	Blade Kit, 650mm, Urethane (Option)	1
▲	22	1228909	(10000000- 20000000)	Blade, Sqge, Rear, 1136l,Urethane[650mm] (Option)	1
▲	23	1228915	(10000000- 20000000)	Blade, Sqge, Front,1072l,Urethane[650mm] (Option)	1
∇	21	9015733	(10000000- 20000000)	Blade Kit, 650mm, Gum (Option)	1
▲	22	1228910	(10000000- 20000000)	Blade, Sqge, Rear, 1136l, Gum[650mm] (Option)	1
▲	23	1228919	(10000000- 20000000)	Blade, Sqge, Front, 1072l Gum[650mm] (Option)	1

∇ ASSEMBLY

▲ INCLUDED IN ASSEMBLY

RECOVERY TANK HOSE GROUP, VALVE

355611

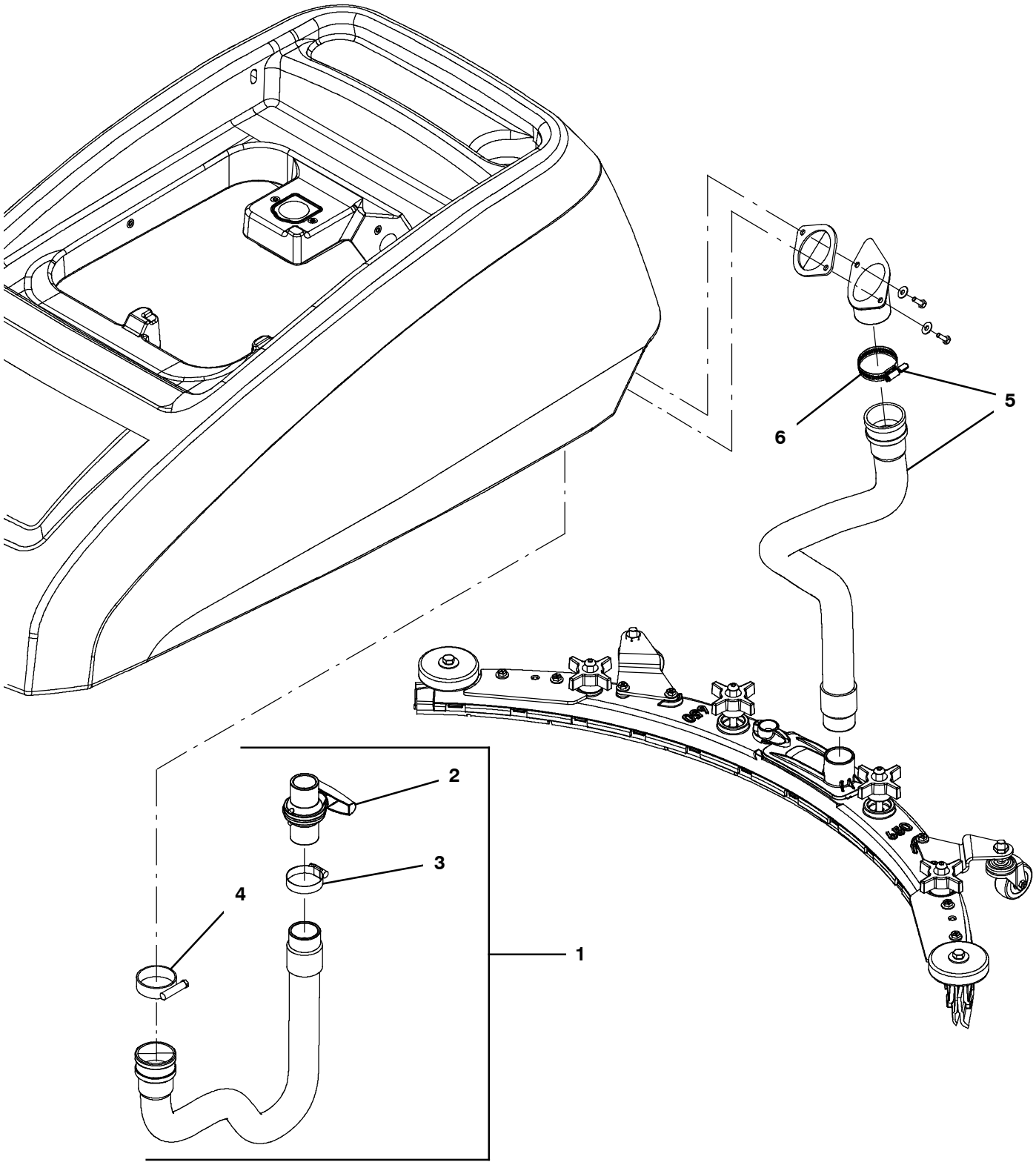

RECOVERY TANK HOSE GROUP, VALVE

	Ref.	Part No.	Serial Number	Description	Qty.
∇	1	9017510	(10000000- 10950167)	Hose Kit, Drain, W/Valve, Pu, Ci [T600] (Gray) (Replaced By 9017507 - PVC Black Pinch Hose Twist Cap)	1
▲	2	1051986	(10000000- 10950167)	Valve, Ball, 2way, 1.0id Pvc, W/Handle (Replaced By 9017507 - PVC Black Pinch Hose Twist Cap)	1
▲	3	11531	(10000000- 20000000)	Clamp, Hose, Wormdrive, 1.06- 2.00d, .56w	1
▲	4	22297	(10000000- 20000000)	Clamp, Hose, Wormdrive, 1.56- 2.50d, .50w	1
∇	5	9017506	(10000000- 10950167)	Hose Kit, Recvy, Pu, Ci [T600/T600e] (Gray) (Replaced By 9017505 - PVC Black Hose)	1
▲	6	1243301	(10000000- 20000000)	Clamp, Wormdrive, 2.0d, .56w	1

∇ ASSEMBLY

▲ INCLUDED IN ASSEMBLY

TALL WET FLOOR SIGN HANGER KIT

355664

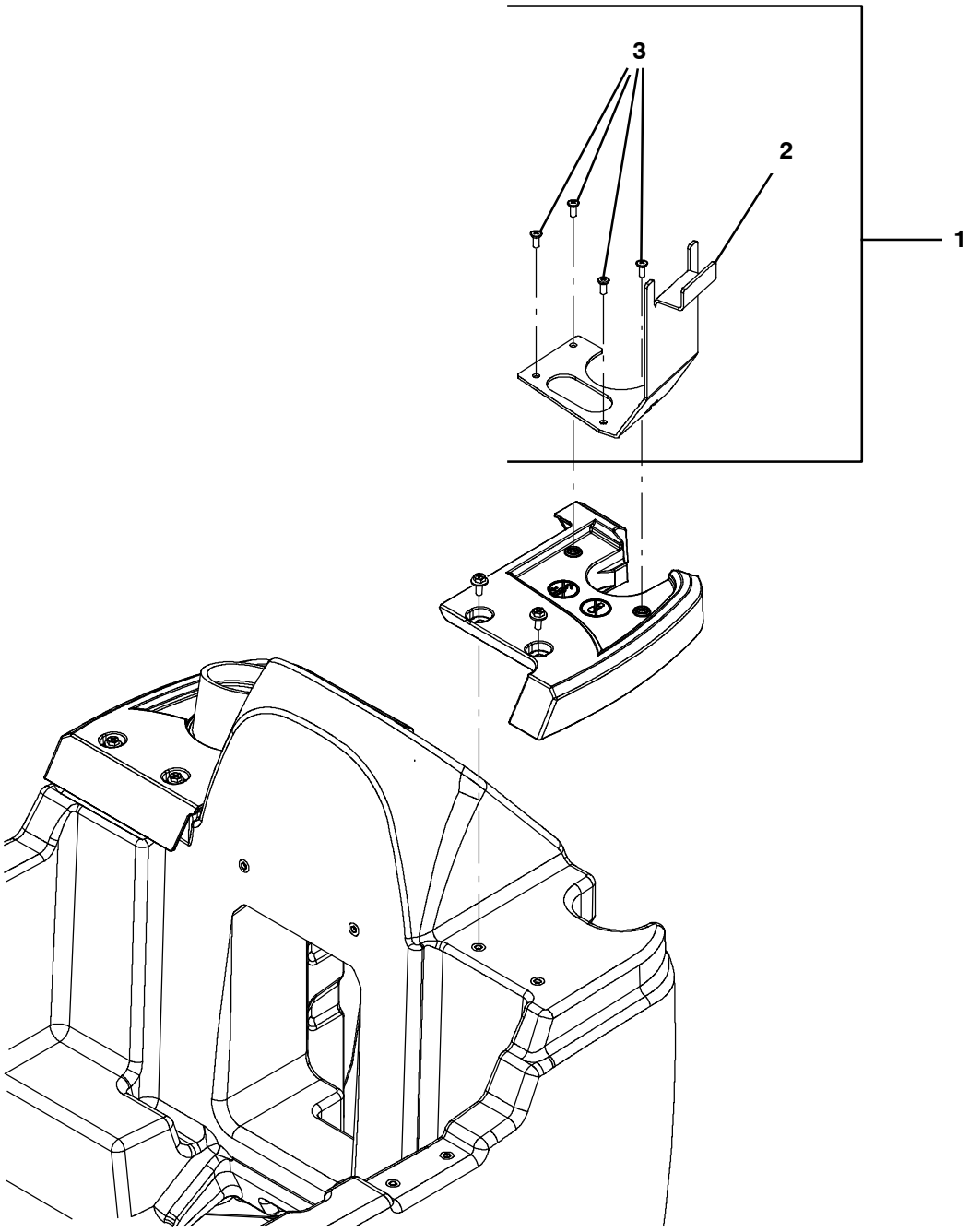

	Ref.	Part No.	Serial Number	Description	Qty.
∇	1	9016988	(10000000- 20000000)	Support Kit, Sign, Ci [T600]	1
▲	2	1237354	(10000000- 20000000)	Bracket Wldt, Hanger, Sign [T600]	1
▲	3	360973	(10000000- 20000000)	Screw, Pan, Phl, 12- 16 X 0.50, F/ Plstc	4

∇ ASSEMBLY

▲ INCLUDED IN ASSEMBLY

TRANSPORT KIT

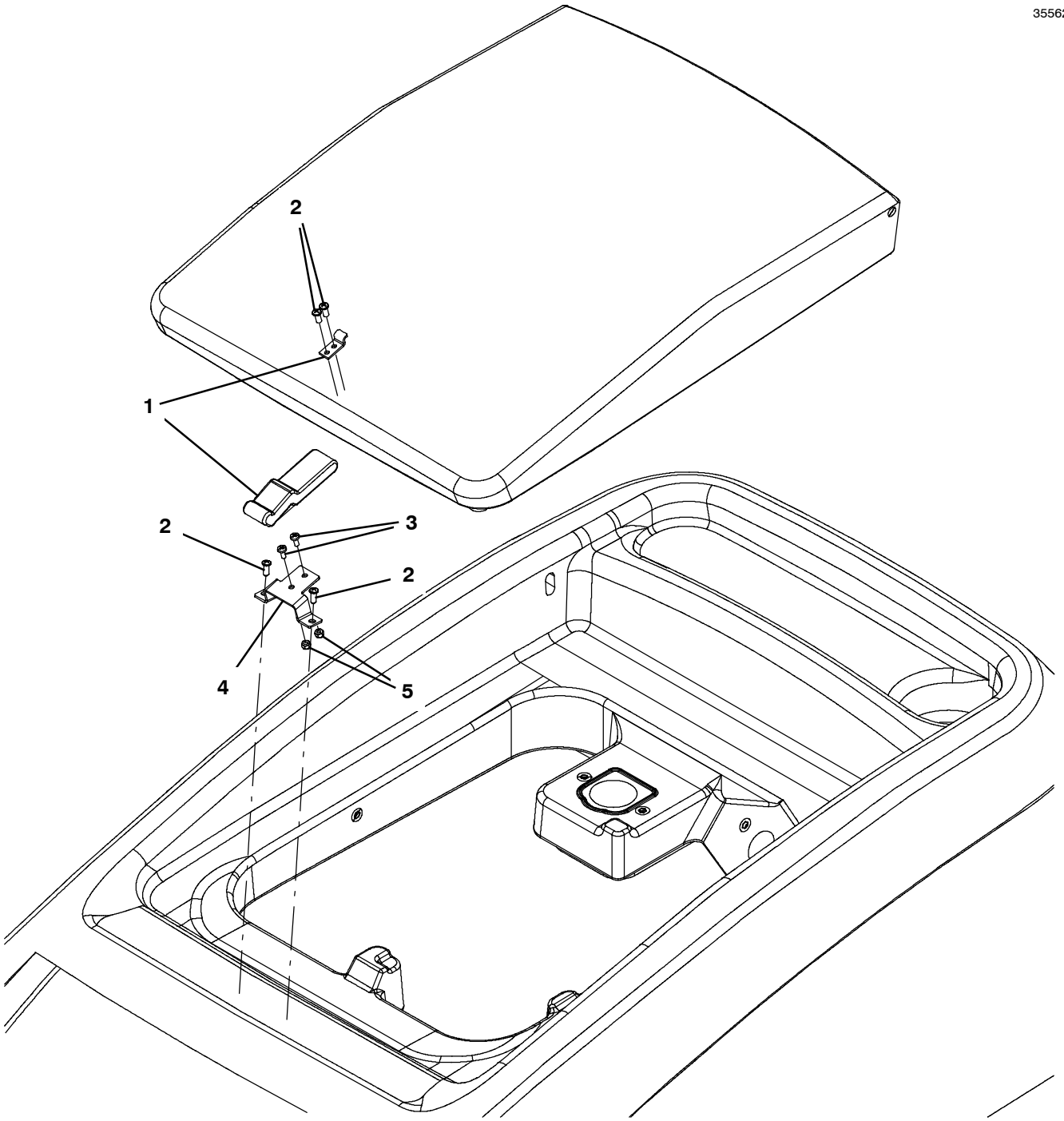

	Ref.	Part No.	Serial Number	Description	Qty.
∇		9042166	(10000000- 20000000)	Transport Kit, Ci [T600/T600e]	1
▲	1	140932	(10000000- 20000000)	Latch, Draw, Rbr, W/ Keeper, Fr/49800	1
▲	2	140825	(10000000- 20000000)	Screw, Pan, Phl, 06 X 0.50, Fmg/Ab, Blk	4
▲	3	49697	(10000000- 20000000)	Screw, Pan, Phl, M4 X 0.70 X 10, Ss	2
▲	4	1230140	(10000000- 20000000)	Bracket, Mtg, Latch	1
▲	5	33932	(10000000- 20000000)	Nut, Hex, Lock, M4 X 0.70, Nl, Ss	2

∇ ASSEMBLY

▲ INCLUDED IN ASSEMBLY

DOCUMENTATION GROUP (ONLINE ONLY)

Ref.	Part No.	Serial Number	Description	Qty.
	4193696	(10000000- 20000000)	Manual, Parts [T600ee]	1
	9016606	(10000000- 20000000)	Manual, Oprtr [T600ee, En]	1
	9016607	(10000000- 20000000)	Manual, Oprtr [T600ee, Es]	1
	9016608	(10000000- 20000000)	Manual, Oprtr [T600ee, Fr]	1
	9016610	(10000000- 20000000)	Instr, Wall Chart [T600ee]	1
	9016605	(10000000- 20000000)	Manual, Service [T600/T600e, En]	1

To view, print, order, download the latest Parts manual, other language Operator manuals, and Use and Care Guides (wall charts), visit:

www.tennantco.com/manual