800

(Kubota 4F/Stage V Diesel)

(SN/ 008015–)

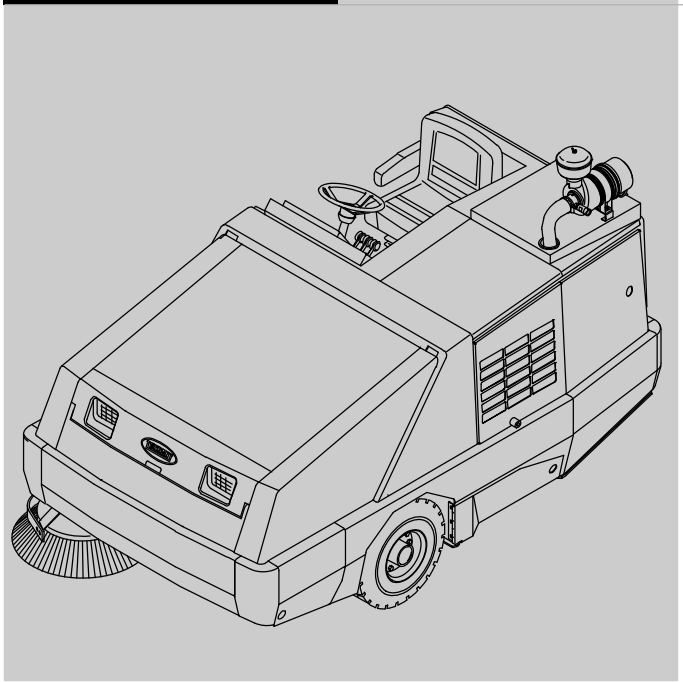

Sweeper
Operator Manual

Tennant*True*™ *Parts and Supplies*

North America / International

For the latest Parts manuals and other language Operator manuals, visit:

www.tennantco.com/manuals

9012844
Rev. 05 (7-2019)

INTRODUCTION

This manual is furnished with each new model. It provides necessary operation and maintenance instructions.

Read this manual completely and understand the machine before operating or servicing it.

This machine will provide excellent service. However, the best results will be obtained at minimum costs if:

- The machine is operated with reasonable care.
- The machine is maintained regularly - per the machine maintenance instructions provided.
- The machine is maintained with manufacturer supplied or equivalent parts.

PROTECT THE ENVIRONMENT

Please dispose of packaging materials, used components such as batteries and fluids in an environmentally safe way according to local waste disposal regulations.

Always remember to recycle.

MACHINE DATA

Please fill out at time of installation for future reference.

Model No. – _____

Serial No. – _____

Installation Date – _____

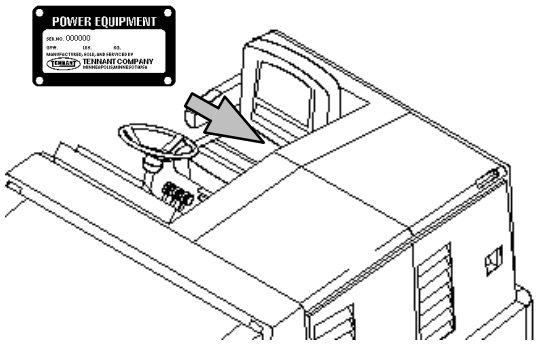

INTENDED USE

The 800 is an industrial rider machine designed to sweep hard surfaces (concrete, asphalt, stone, synthetic, etc). Typical applications include industrial warehouses, manufacturing facilities, distribution facilities, stadiums, arenas, convention centers, parking facilities, transportation terminals, and construction sites. Do not use this machine on soil, grass, artificial turf, or carpeted surfaces. This machine can be used both indoors and outdoors, but ensure there is adequate ventilation if used indoors. Do not use this machine other than described in this Operator Manual.

Tennant Company
PO Box 1452
Minneapolis, MN 55440
Phone: (800) 553–8033
www.tennantco.com

CALIFORNIA PROPOSITION 65 WARNING:

Engine exhaust from this product contains chemicals known to the State of California to cause cancer, birth defects, or other reproductive harm.

II Speed and Thermo Sentry are United States registered trademarks of the Tennant Company.

Specifications and parts are subject to change without notice.

Original instructions, Copyright © 2014, 2016, 2017, 2019 TENNANT Company, Printed in U.S.A.

CONTENTS

	Page
Safety Precautions	3
Operation	7
Machine Components	7
Controls And Instruments	8
Symbol Definitions	9
Operation Of Controls	11
Directional Pedal	11
Brake Pedal	11
Parking Brake Pedal	11
Steering Wheel Tilt Handle	12
Main Brush Adjustment Knob	12
Side Brush Adjustment Knob	12
Horn Button	12
Charging System Light	13
Engine Oil Pressure Light	13
Engine Water Temperature Light	13
Hopper Temperature Light – Thermo–Sentry	13
Main Brush Shut Down Light	14
Clogged Dust Filter Light	14
Hopper Door Light (Option)	14
Check Engine Light	14
Clogged Hydraulic Filter Light	15
Fuel Level Gauge	15
Hour Meter	15
Operating Lights Switch	15
Hazard Light Switch (Option)	16
Filter Shaker Switch	16
Vacuum Fan Switch	16
EDM (Engine Display Module)	17
Adjusting The Engine Speed (RPM)	17
Parking Brake Indicator	17
Glow Plug Indicator	17
Operator Seat	18
Seat Belts (Option)	18
Seat Support	18
Windshield Wiper Switch (Option)	19
Dome Light Switch (Option)	19
Heater Knob (Option)	19
Fan Speed Switch (Option)	19
Air Conditioning Switch (Option)	20
Air Control Vents (Option)	20
Brush Information	21
How The Machine Works	21
Pre–Operation Checklist	22
Starting The Machine	23
Turning Off The Machine	24
While Operating The Machine	25
Sweeping	26
Stop Sweeping	27
Emptying The Hopper	28
Engaging Hopper Support Bar	30
Disengaging Hopper Support Bar	31
Options	32
Vacuum Wand	32
Regenerative Filter System (RFS)	35
Machine Troubleshooting	36
Maintenance	37
Maintenance Chart	37
Lubrication	41
Rear Wheel Support	41
Front Wheel Bearings	41
Side Brush Pivot Pins	41
Main Brush Adjustment	41
Hydraulics	42
Hydraulic Fluid Reservoir	42
Hydraulic Fluid	43
Hydraulic Hoses	43
Engine	44
Engine Oil	44
Cooling System	44
Engine Belt	45
Air Conditioning Belt (Option)	45
Draining Water From The Water / Fuel Separator	46
Fuel Lines	46
Priming The Fuel System	46
Fuel Filters	47
Oil Separator Element	47
PCV (Positive Crankcase Ventilation) Valve	47
EGR (Exhaust Gas Recirculation) Cooler	48
DPF (Diesel Particulate Filter)	48
Exhaust Manifold	48
Turbo Charger	49
Valve Clearance	49
Air Intake Hoses	49
Air Filter Indicator	50
Air Filter Assembly	50
DPF (Diesel Particulate Filter) Regeneration	51
DPF (Diesel Particulate Filter) Alerts	52
DPF (Diesel Particulate Filter) Status Icons	54
Initiating A Sweeping Regeneration	54
Initiating A Parked Regeneration	55
Battery	58
Circuit Breakers	58
Debris Hopper	59
Removing Or Replacing The Hopper Dust Filter	59
Cleaning The Hopper Dust Filter	60
Thermo Sentry	60
Main Brush	61
Replacing Or Rotating The Main Brush	61
Checking / Adjusting The Main Brush Pattern	62
Adjusting The Main Brush Width	63
Adjusting The Main Brush Taper	63
Side Brush(es)	64
Replacing The Side Brush	64
Adjusting The Side Brush Pattern	64

Page
Skirts And Seals 65
Hopper Lip Skirts 65
Hopper Side Skirt 65
Brush Compartment Skirts 65
Rear Skirts 65
Brush Door Seals 66
Hopper Dust Seal 66
Hopper Seals 66
Hopper Door Seals 66
Hopper Vacuum Fan Seal 67
Hopper Cover Seal 67
Brakes And Tires 68
Service Brakes 68
Parking Brake 68
Tires 68
Front / Rear Wheels 68
Propelling Motor 69
Air Conditioner Filter (Option) 69
Pushing, Towing, And Transporting
The Machine 70
Pushing Or Towing The Machine 70
Transporting The Machine 71
Machine Jacking 73
Storage Information 73
Specifications 74
General Machine Performance 75
Power Type 75
Steering 75
Hydraulic System 75
Braking System 76
Tires 76
Machine Dimensions 76

IMPORTANT SAFETY INSTRUCTIONS – SAVE THESE INSTRUCTIONS

The following precautions are used throughout this manual as indicated in their description:

WARNING: To warn of hazards or unsafe practices that could result in severe personal injury or death.

FOR SAFETY: To identify actions that must be followed for safe operation of equipment.

The following information signals potentially dangerous conditions to the operator. Know when these conditions can exist. Locate all safety devices on the machine. Report machine damage or faulty operation immediately.

WARNING: Moving belt and fan. Keep away.

WARNING: Machine can emit excessive noise. Hearing loss can result. Wear hearing protection.

WARNING: Machine emits toxic gases. Serious injury or death can result. Provide adequate ventilation.

WARNING: Raised hopper may fall. Engage hopper support bar.

WARNING: Lift arm pinch point. Stay clear of hopper lift arms.

WARNING: Burn hazard. Hot surface. Do NOT touch.

This machine may be equipped with technology that automatically communicates over the cellular network. If this machine will be operated where cell phone use is restricted because of concerns related to equipment interference, please contact a Tennant representative for information on how to disable the cellular communication functionality.

FOR SAFETY:

1. **Do not operate machine:**
   - **Unless trained and authorized.**
   - **Unless operator manual is read and understood.**
   - **Under the influence of alcohol or drugs.**
   - **While using a cell phone or other types of electronic devices.**
   - **Unless mentally and physically capable of following machine instructions.**
   - **If it is not in proper operating condition.**
   - **Without filters in place.**
   - **In areas where flammable vapors/liquids or combustible dusts are present.**
   - **In areas that are too dark to safely see the controls or operate the machine unless operating / headlights are turned on.**
   - **In areas with possible falling objects unless equipped with overhead guard.**

2. **Before starting machine:**
   - **Check machine for fluid leaks**
   - **Keep sparks and open flame away from refueling area.**
   - **Make sure all safety devices are in place and operate properly.**
   - **Check brakes and steering for proper operation.**
   - **Adjust seat and fasten seat belt (if equipped).**

3. **When starting machine:**
   - **Keep foot on brake and directional pedal in neutral.**

4. When using machine:
   - Use only as described in this manual.
   - Do not pick up burning or smoking debris, such as cigarettes, matches or hot ashes
   - Go slowly on inclines and slippery surfaces.
   - Do not sweep on ramp inclines that exceed 15% grade or transport (GVWR) on ramp inclines that exceed 15% grade.
   - Use brakes to stop machine.
   - Reduce speed when turning.
   - Keep all parts of body inside operator station while machine is moving.
   - Use care when reversing machine.
   - Move machine with care when hopper is raised.
   - Do not raise hopper when machine is on an incline.
   - Make sure adequate clearance is available before raising hopper.
   - Keep children and unauthorized persons away from machine.
   - Do not carry passengers on machine.
   - Always follow safety and traffic rules.
   - Report machine damage or faulty operation immediately.

5. Before leaving or servicing machine:
   - Do not park near combustible materials, dusts, gases, or liquids.
   - Stop on level surface.
   - Set parking brake.
   - Turn off machine and remove key.

6. Before initiating an active parked regeneration:
   - Stop on level surface in a well ventilated open area.
   - Park in low traffic areas away from pedestrians and other equipment.
   - Do not park near combustible materials, dusts, gases, or liquids. Do not park indoors or in enclosed areas.
   - Set parking brake.
   - Do not leave machine unattended.

7. When servicing machine:
   - All work must be done with sufficient lighting and visibility.
   - Avoid moving parts. Do not wear loose clothing, jewelry and secure long hair.
   - Block machine tires before jacking machine up.
   - Jack machine up at designated locations only. Support machine with jack stands.
   - Use hoist or jack that will support the weight of the machine.
   - Do not power spray or hose off machine near electrical components.
   - Disconnect battery connections before working on machine.
   - Avoid contact with battery acid.
   - Avoid contact with hot engine coolant.
   - Do not remove cap from radiator when engine is hot.
   - Allow engine to cool.
   - Keep flames and sparks away from fuel system service area. Keep area well ventilated.
   - Use cardboard to locate leaking hydraulic fluid under pressure.
   - All repairs must be performed by a trained service mechanic.
   - Do not modify the machine from its original design.
   - Use Tennant supplied or approved replacement parts.
   - Wear personal protective equipment as needed and where recommended in this manual.

For Safety: wear hearing protection.

For Safety: wear protective gloves.

For Safety: wear eye protection.

For Safety: wear protective dust mask.

8. When loading/unloading machine onto/off truck or trailer:
   - Empty debris hopper before loading machine.
   - Use ramp, truck or trailer that will support the weight of the machine and operator.
   - Do not load/unload on ramp inclines that exceed 27% grade.
   - Use winch. Do not drive the machine onto/off the truck or trailer unless the load height is 380 mm (15 in) or less from the ground.
   - Turn off machine and remove key.
   - Set parking brake after machine is loaded.
   - Block machine tires.
   - Tie machine down to truck or trailer.

The safety labels appear on the machine in the locations indicated. Replace damaged labels.

WARNING LABEL – Machine emits toxic gases. Serious injury or death can result. Provide adequate ventilation.

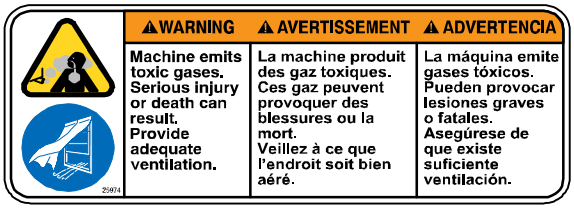

Located on front panel of operator compartment.

WARNING LABEL – Machine can emit excessive noise. Hearing loss can result. Wear hearing protection.

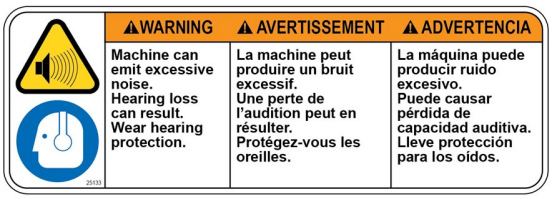

Located on front panel of operator compartment.

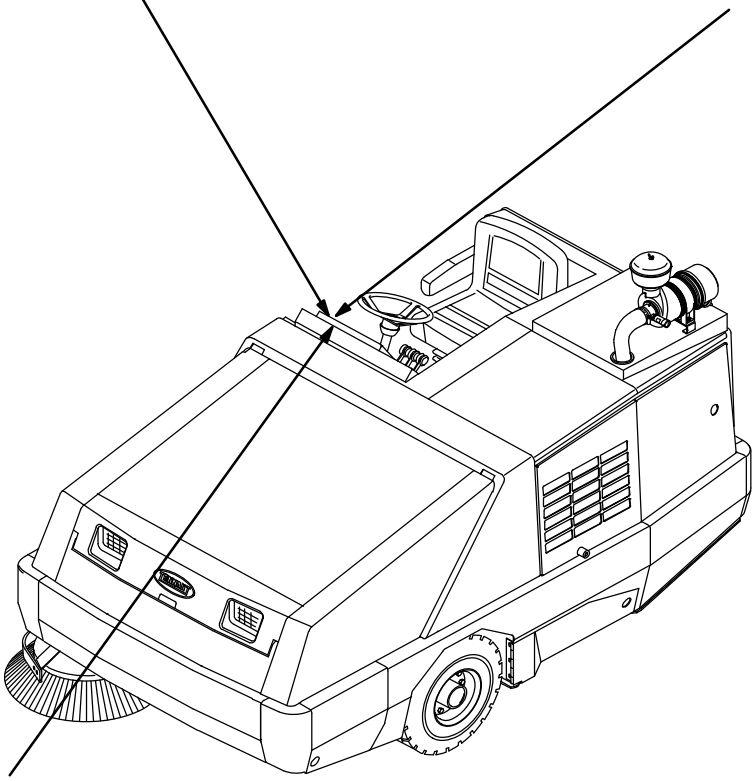

FOR SAFETY LABEL – Read manual before operating machine.

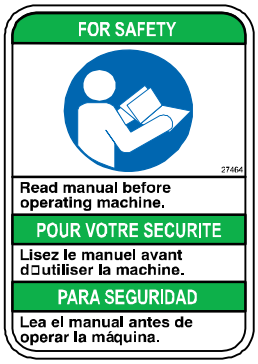

Located on front panel of operator compartment.

WARNING LABEL – Lift arm pinch point. Stay clear of hopper lift arms.

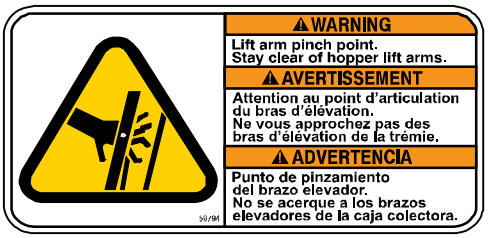

Located on both hopper lift arms.

WARNING LABEL – Moving belt and fan. Stay away.

Located on alternator belt guard, engine top cover, top cover support, and air conditioner belt guard (if machine has air conditioner option).

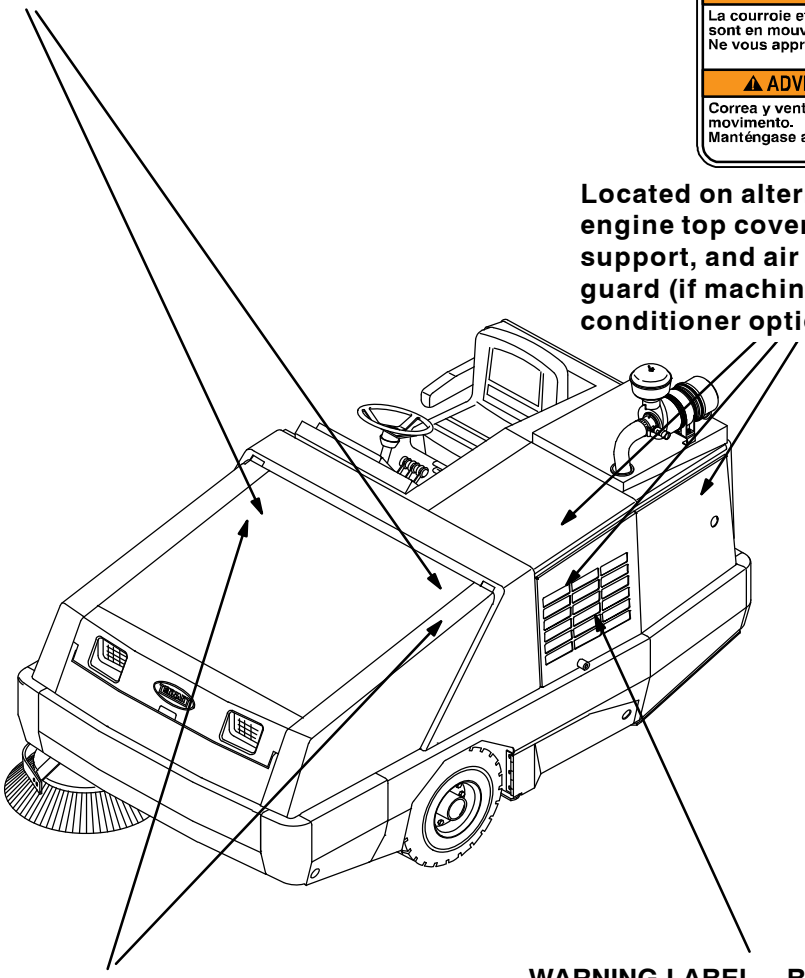

WARNING LABEL – Raised hopper may fall. Engage hopper support bar.

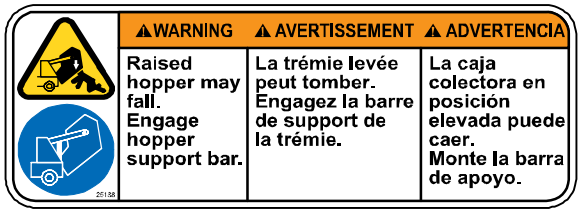

Located on hopper lift arms cross-tube and on both hopper lift arms.

WARNING LABEL – Burn hazard. Hot surface. Do NOT touch.

Located on engine side guard.

OPERATION

MACHINE COMPONENTS

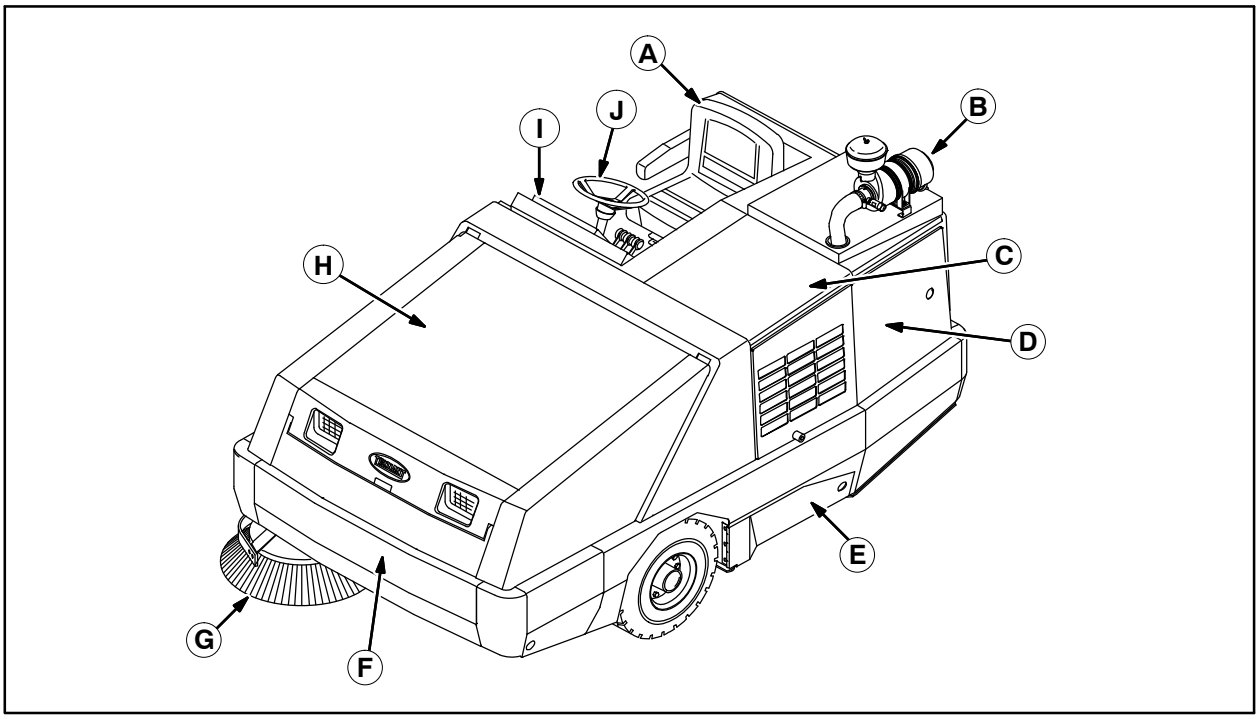

A. Operator seat
B. Air filter assembly
C. Engine top cover
D. Engine side cover
E. Main brush access door
F. Hopper door
G. Side brush
H. Hopper cover
I. Instrument panel
J. Steering wheel

CONTROLS AND INSTRUMENTS

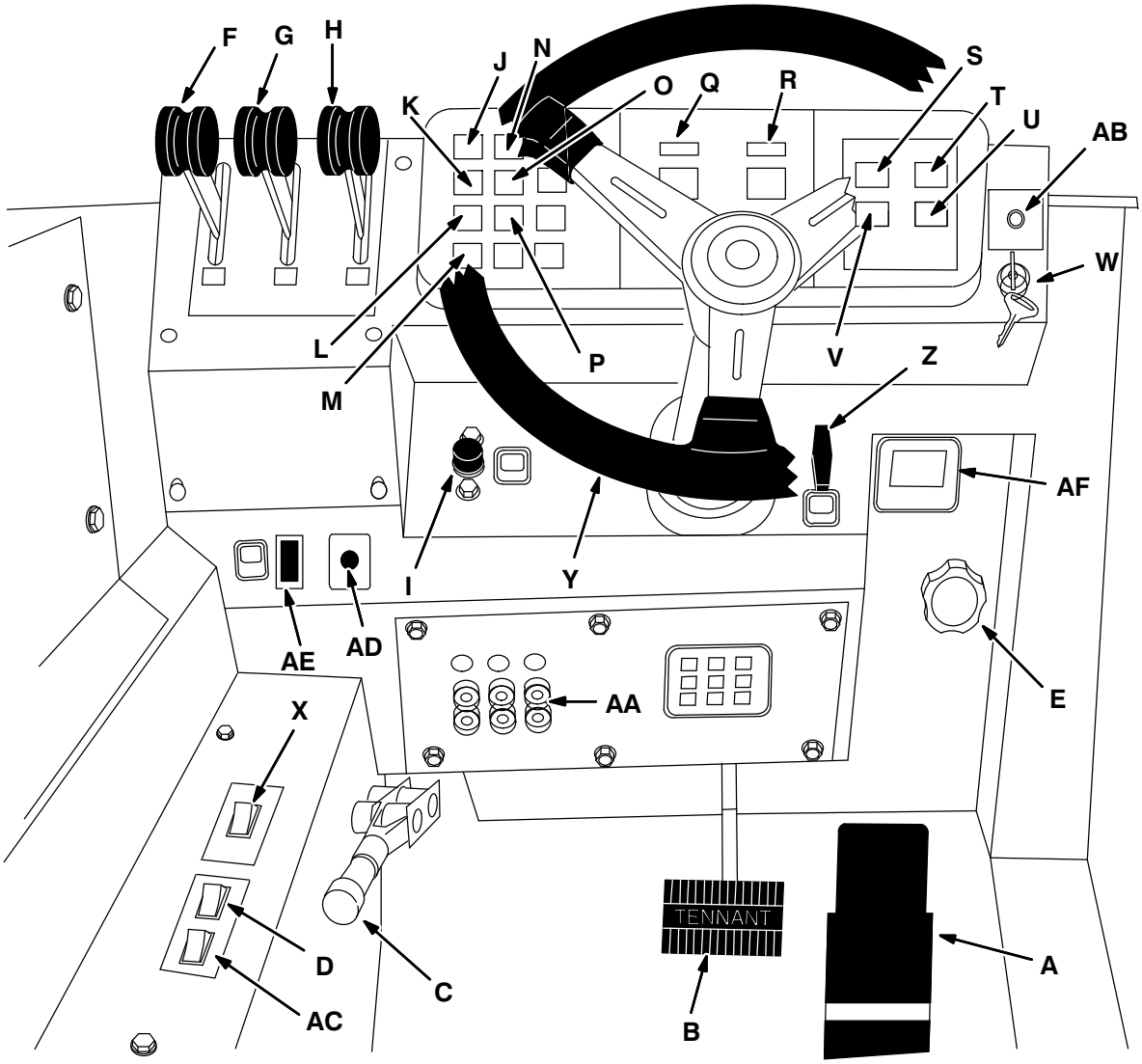

A. Directional pedal
B. Brake pedal
C. Parking Brake Lever
D. Side Brush Switch
E. Side Brush Down Pressure Knob
F. Hopper Door Lever
G. Hopper Rollout Lever
H. Hopper Lift Lever
I. Horn Button
J. Charging System Light
K. Engine Oil Pressure Light
L. Engine Water Temperature Light
M. Hopper Temperature Light – Thermo Sentry
N. Main Brush Shut Down Light
O. Clogged Dust Filter Light
P. Hopper Door Light (Option)
Q. Fuel Level Gauge
R. Hour Meter
S. Hazard Light Switch (Option)
T. Operating Light Switch
U. Filter Shaker Switch
V. Vacuum Fan Switch
W. Ignition switch
X. Main Brush Switch
Y. Steering Wheel
Z. Steering Column Tilt Lever
AA. Circuit Breakers
AB. Check Engine Light
AC. Side Brush Switch, Left (Option)
AD. Heater Knob (Option)
AE. Clogged Hydraulic Filter Light
AF. EDM (Engine Display Module)

SYMBOL DEFINITIONS

These symbols identify controls, displays, and features on the machine.

Engine Oil Pressure

Engine Water Temperature

Side Brush Down Pressure Light

Side Brush Down Pressure Heavy

Side Brush Down and On

Side Brush Up and Off

Hopper Door Close

Hopper Door Open

Hopper Roll In

Hopper Roll Out

Hopper Down

Hopper Up

Horn

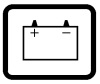 Charging System

Hopper Temperature – Thermo Sentry

Main Brush Shut Down

Filter Clogged

Hopper Door Closed

Fuel

Hour Meter

Hazard Light

Operating Lights

Fan

Steering Wheel Tilt

Main Brush Down and II Speed

Main Brush Off

Main Brush Down and Normal Speed

Main Brush Down Pressure Light

Main Brush Down Pressure Heavy

Circuit Breaker 1

Circuit Breaker 2

Circuit Breaker 3

Circuit Breaker 4

Circuit Breaker 5

Circuit Breaker 6

Circuit Breaker 7

Circuit Breaker 8

Circuit Breaker 9

Parking Brake

Hydraulic Filter Clogged

Ultra Low Diesel fuel only

OPERATION OF CONTROLS

DIRECTIONAL PEDAL

Press the top of the *Directional pedal* to move forward and the bottom of the pedal to move backward. The pedal returns to the neutral position when it is released.

BRAKE PEDAL

Press the *Brake pedal* to stop the machine.

PARKING BRAKE PEDAL

Pull the parking brake lever up to set the parking brake.

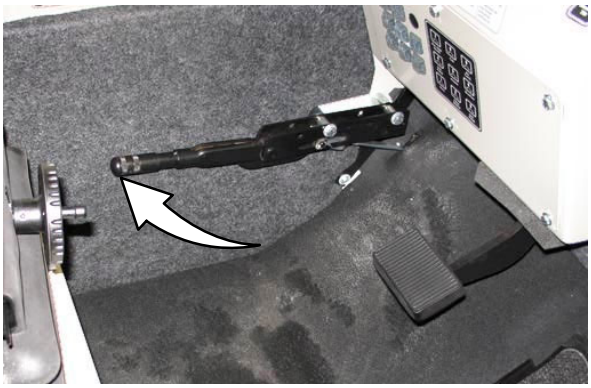

Push the parking brake lever down to release the parking brake.

NOTE: If the operator is not in the seat, the parking brake must be engaged or the machine will automatically shut off after 2 seconds.

STEERING WHEEL TILT HANDLE

The steering wheel tilt handle controls the angle of the steering wheel.

Adjust: Pull out the tilt handle, move the steering wheel up or down, and release the tilt handle.

MAIN BRUSH ADJUSTMENT KNOB

The main brush adjustment knob changes the amount of contact the main brush has with the surface being swept. Refer to *ADJUSTING THE MAIN BRUSH WIDTH* section of this manual.

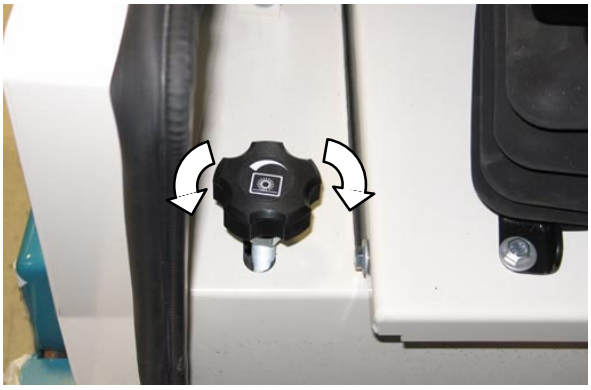

SIDE BRUSH ADJUSTMENT KNOB

The side brush adjustment knob changes the amount of contact the side brush has with the surface being swept. Refer to *ADJUSTING THE SIDE BRUSH PATTERN* section of this manual.

HORN BUTTON

The horn button operates the horn.

Sound: Press the button.

CHARGING SYSTEM LIGHT

The charging system light comes on when the alternator is not operating within normal range; 13.5 to 14.5 V. If the light comes on, stop operating the machine. Contact a TENNANT service representative.

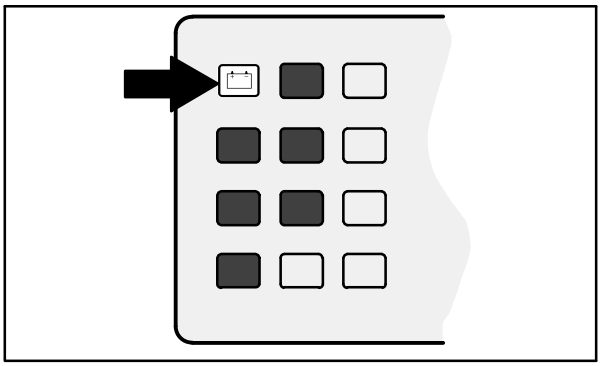

07757

ENGINE WATER TEMPERATURE LIGHT

The engine water temperature light comes on when the temperature of the engine coolant is more than 113° C (235° F). If the light comes on, stop operating the machine. Contact a TENNANT service representative.

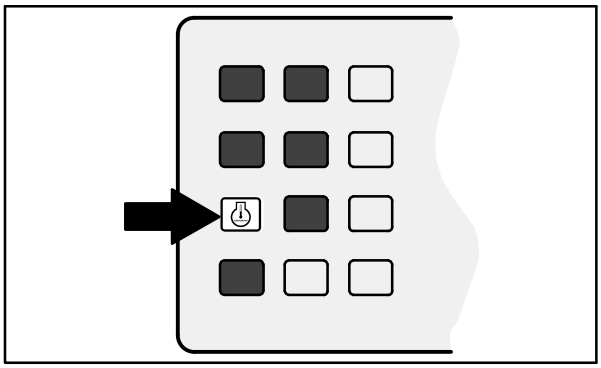

07759

ENGINE OIL PRESSURE LIGHT

The engine oil pressure light comes on when the engine oil pressure falls below 40 kPa (5 psi). If the light comes on, stop operating the machine. Contact a TENNANT service representative.

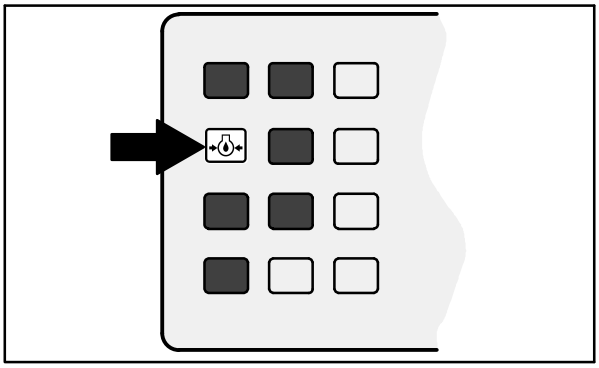

07758

HOPPER TEMPERATURE LIGHT – THERMO–SENTRY

The hopper temperature light comes on when the Thermo–Sentry senses that there is excessive heat in the hopper, possibly from a fire. The Thermo Sentry will stop the vacuum fan.

The Thermo–Sentry has to be reset manually, see *THERMO–SENTRY* in *MAINTENANCE.*

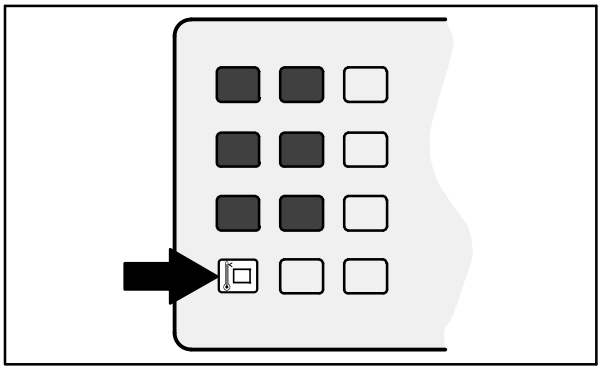

07760

MAIN BRUSH SHUT DOWN LIGHT

The main brush shut down light comes on when there is excessive down pressure for the main brush, or there is a problem with the main and side brush hydraulic motor circuit. The brush pressures can be reduced with the main brush and side brush pressure knobs.

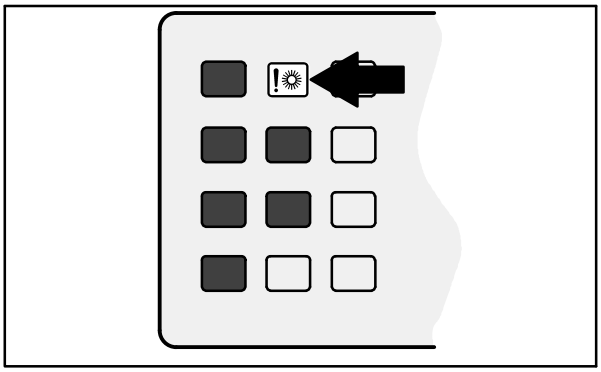

07761

CLOGGED DUST FILTER LIGHT

The clogged dust filter light comes on when the hopper dust filter is clogged.

To clean the filter, hold the vacuum and filter shaker switch in the **Filter shaker** position. If the clogged dust filter light remains lit, manually clean the hopper dust filter. See *HOPPER DUST FILTER* in the *MAINTENANCE section of this manual.*

NOTE: The clogged dust filter light also comes on when the hopper door is closed and the vacuum fan is on.

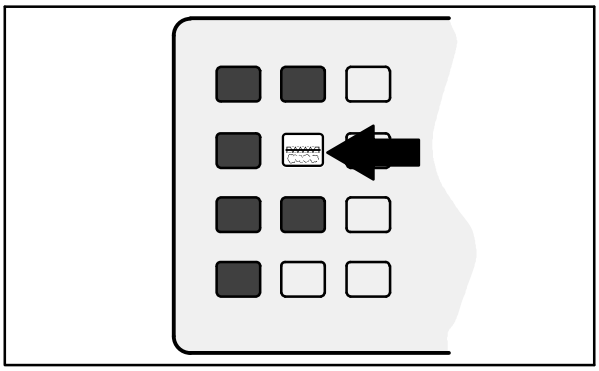

07762

HOPPER DOOR LIGHT (OPTION)

The hopper door light comes on when the hopper door is open.

Make sure the hopper door is closed and the hopper door light is off, before sweeping.

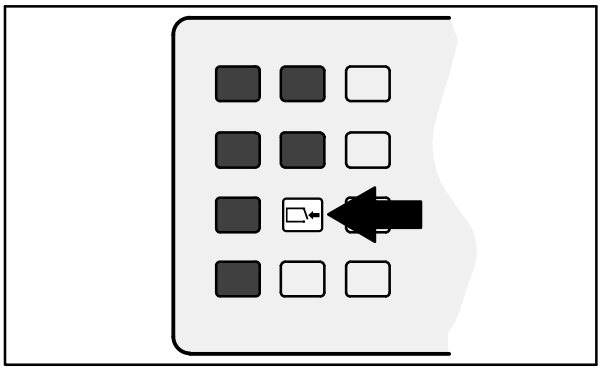

07763

CHECK ENGINE LIGHT

The check engine light comes on when there is a engine performance issue. Call a Tennant service representative if the check engine light comes on during machine operation.

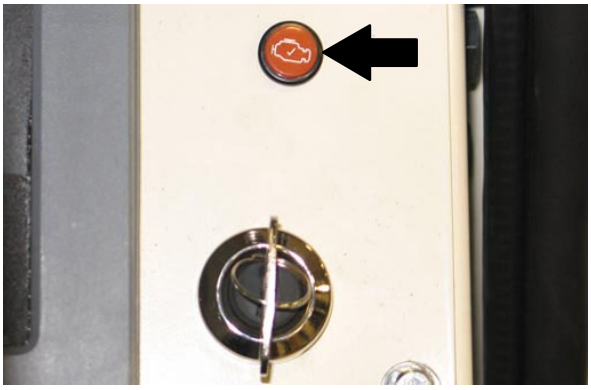

CLOGGED HYDRAULIC FILTER LIGHT

The clogged hydraulic filter light comes on when the hydraulic filter is clogged. If this light remains on, have the hydraulic filter changed as soon as possible.

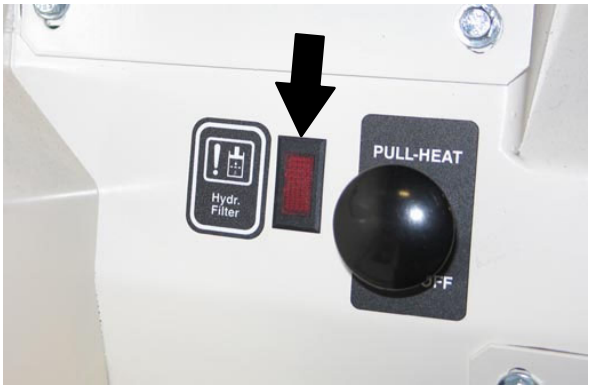

FUEL LEVEL GAUGE

The fuel level gauge indicates how much fuel is in the fuel tank.

IMPORTANT: Use Ultra Low Sulfur Diesel Fuel Only. DO NOT use other fuels such as Bio–Diesel or add aftermarket additives to the fuel in this machine. Other fuels and aftermarket additives will damage emission components, requiring more frequent and costlier maintenance. Engine damage due to use of other fuels and aftermarket additives may not be covered under the machine warranty.

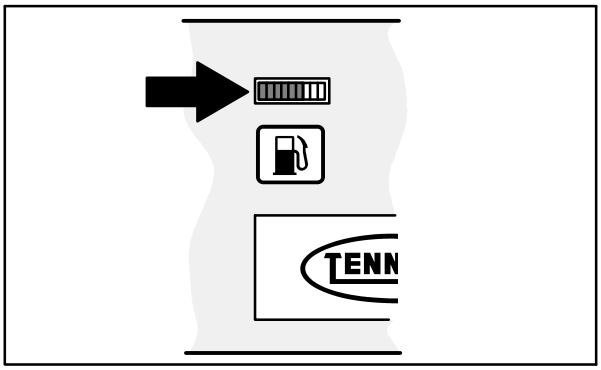

07764

HOUR METER

The *Hour meter* records the hours the machine was operated. Use this information to determine machine service intervals.

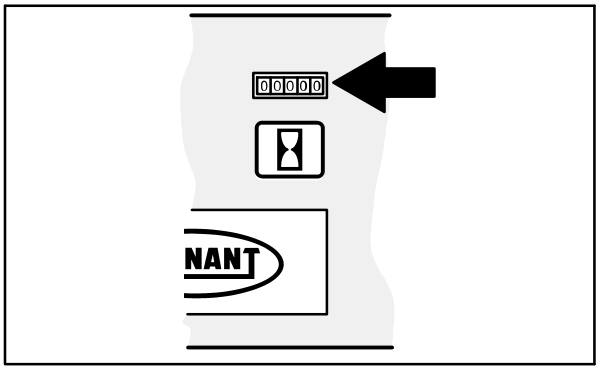

07765

OPERATING LIGHTS SWITCH

The operating / hazard lights switch powers on and off the headlights and taillights.

On: Press the operating lights switch. The indicator light above the switch will come on.

Off: Press the operating lights switch. The indicator light above the switch will go off.

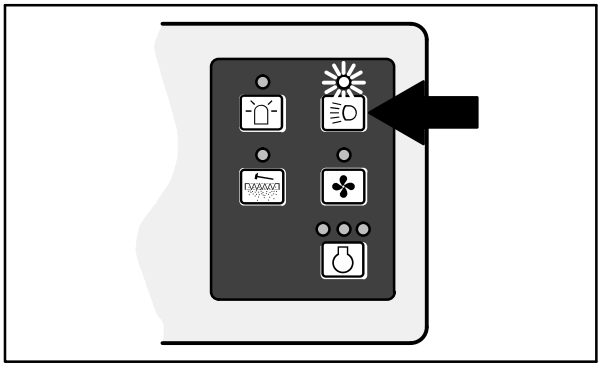

07768

HAZARD LIGHT SWITCH (OPTION)

The hazard light switch powers on and off the hazard light.

On: Press the hazard light switch. The indicator light above the switch will come on.

Off: Press the hazard light switch. The indicator light above the switch will go off.

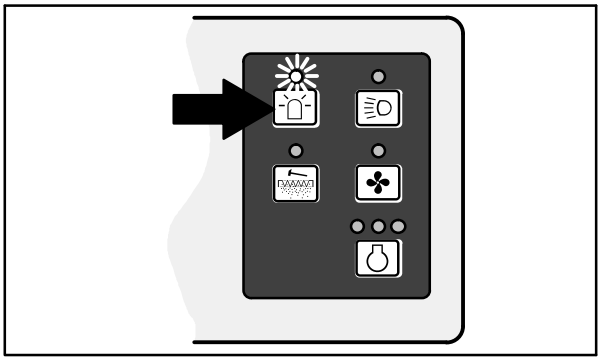

07766

FILTER SHAKER SWITCH

The filter shaker switch starts the hopper dust filter shaker. The shaker automatically operates for 40 seconds.

Start: Press the filter shaker switch. The indicator light will remain on while the filter shaker is operating.

Stop: Press the filter shaker switch again ***IF*** wanting to stop the filter shaker during the 40 second shaking cycle.

NOTE: The vacuum fan shuts off while the filter shaker is operating.

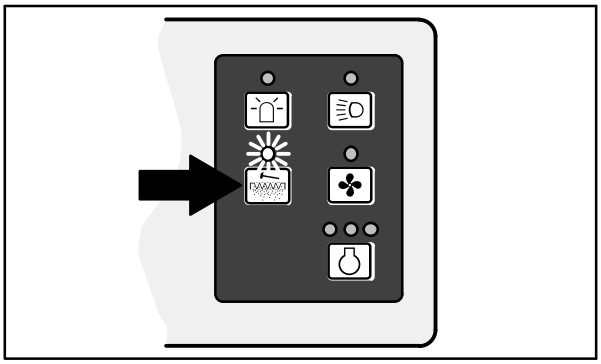

07767

VACUUM FAN SWITCH

The vacuum fan switch starts and stops the vacuum fan.

Start: Press the vacuum fan switch. The indicator light above the switch will come on.

Stop: Press the vacuum fan switch. The indicator light above the switch will go off.

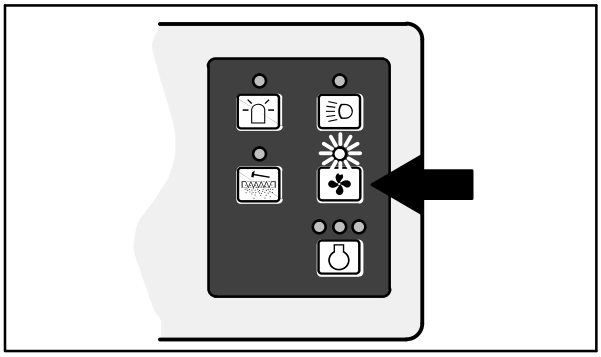

07769

EDM (ENGINE DISPLAY MODULE)

The *EDM* displays engine RPM, engine status, and regeneration messages and alerts. Use the soft buttons located on the bottom of the *EDM* to access the various menus for adjusting the *EDM* and engine settings and checking diagnostics and system information. Refer to the *EDM* manufacturer operator manual for additional information on how to use the *EDM*.

ADJUSTING THE ENGINE SPEED (RPM)

Use the *EDM (engine display module)* to adjust the engine speed.

Idle: Press the soft button located under 1350 RPM to adjust the engine to the idle speed.

Low: Press the soft button located under 2000 RPM to adjust the engine to the low work speed.

High: Press the soft button located under 2400 RPM to adjust the engine to the high work speed.

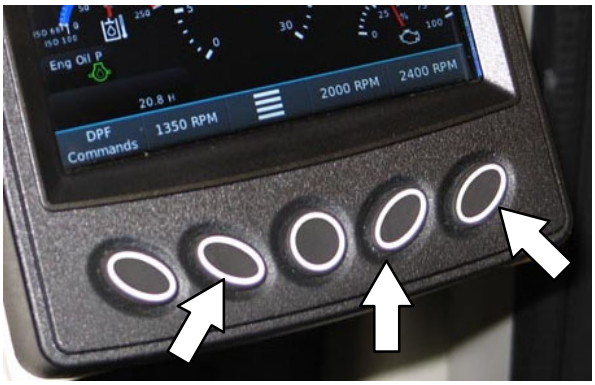

PARKING BRAKE INDICATOR

The parking brake indicator comes on when the parking brake is engaged. Release the parking brake before operating the machine.

OPERATOR SEAT

The operator seat has two adjustments. The adjustments are for the front to rear seat position and ride stiffness.

The front–to–back adjustment lever adjusts the seat position.

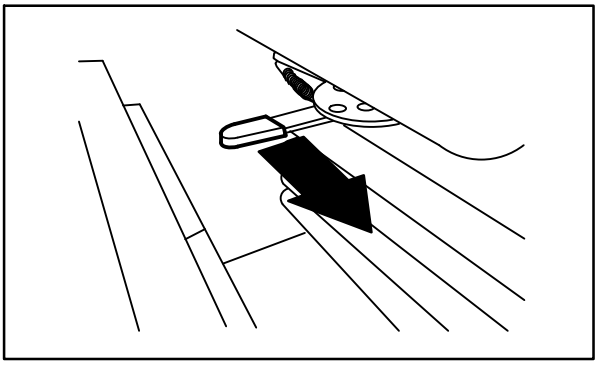

08443

The ride stiffness is adjusted with the stiffness knob. Turn the knob clockwise to increase the ride stiffness, and counter-clockwise to decrease the ride stiffness.

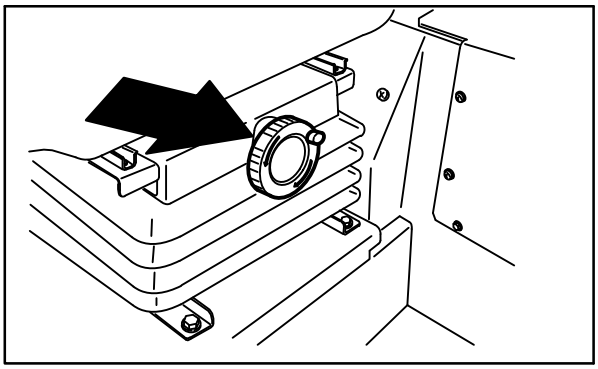

08444

SEAT BELTS (OPTION)

FOR SAFETY: Before starting machine, adjust seat and fasten seat belt (if equipped).

SEAT SUPPORT

The *Seat support* holds the seat up to allow access to the fuel lines from the fuel tank.

Lift: Pull up on the seat mounting plate until the seat mount locks up.

Lower: Pull on the release lever and lower the seat mounting plate.

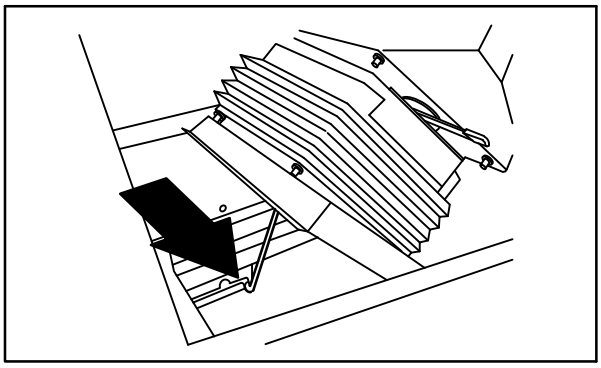

08445

WINDSHIELD WIPER SWITCH (OPTION)

The windshield wiper switch operates the windshield wiper on the cab option.

On: Pull out on the switch.

Off: Push in on the switch.

DOME LIGHT SWITCH (OPTION)

The dome light switch controls the dome light on the cab option.

On: Press on the switch.

Off: Press on the switch again.

HEATER KNOB (OPTION)

The heater knob controls the cab heater on the cab option. The heater knob is located above the parking brake lever.

On: Pull the knob out until the air temperature is at the desired comfort level. For maximum heat, pull the knob out all the way.

Off: Push the knob in all the way.

FAN SPEED SWITCH (OPTION)

The fan speed switch controls the speed of the fan in the optional cab. The pressurizer can be set at three different speeds and into the **off** setting. The fan speed switch is located on the roof of the optional cab.

High: Turn the switch clockwise to the **high** setting.

Medium: Turn the switch clockwise to the **medium** setting.

Low: Turn the switch clockwise to the **low** setting.

Off: Turn the switch counter–clockwise to the **off** setting.

AIR CONDITIONING SWITCH (OPTION)

The air conditioning switch operates the cab's air conditioner in the optional cab. The air conditioning switch is located on the roof of the optional cab.

On: Turn the switch clockwise until the air temperature is at the desired comfort level. For maximum cooling, turn the switch clockwise all the way to the maximum position.

Off: Turn the switch counter−clockwise all the way to the **off** position.

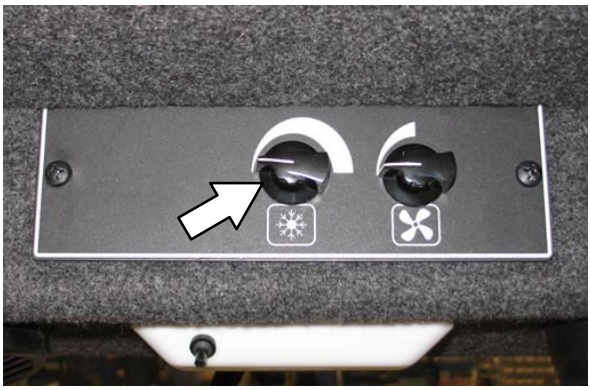

AIR CONTROL VENTS (OPTION)

The air control vents control the direction of the air flow in an optional cab. Turn the vents until they meet your desired comfort level. For defrosting, direct the air control vents onto the windows. This creates warm, dry air which works best for defrosting. If this causes the windows to fog, turn on the air conditioner for drier air.

BRUSH INFORMATION

For best results, use the correct brush type for the cleaning application.

NOTE: *The amount and type of soilage play an important role in determining the type of brushes to use. Contact a Tennant representative for specific recommendations.*

Polypropylene 8-double Row Main Brush – Recommended for general sweeping applications.

Polypropylene and Wire 8-double Row Main Brush – Recommended for general sweeping and slightly impacted debris.

Crinkle Wire 8-double Row Main Brush – Recommended for foundry sweeping where heat may melt synthetic bristles. The stiff wire bristles cut through compacted grime, hard to sweep dirt, and dirt mixed with oil, grease, or mud.

Nylon 24-row Main Brush – Recommended for severe dust conditions on rough surfaces. This brush has excellent pickup and long life.

Nylon Patrol Main Brush – Recommended for bulky debris swept at faster speeds.

Heavy Gauge Polypropylene 8-double Row Main Brush – Recommended for sweeping outdoor areas. The stiffer bristles provide exceptional pickup of heavier bulky debris.

Polypropylene Side Brush – Recommended for general sweeping of light to medium debris.

Nylon Side Brush – Recommended for general sweeping of rough or irregular surfaces. Nylon has a long wear life.

Flat Wire Side Brush – Recommended for outdoor curb-side sweeping where dirt is heavy or compacted.

HOW THE MACHINE WORKS

The steering wheel controls the direction of machine travel. The directional pedal controls the speed and forward/reverse direction. The brake pedal slows and stops the machine.

The side brush sweeps debris into the path of the main brush. The main brush sweeps debris from the floor into the hopper. The vacuum system pulls dust and air through the hopper and the hopper dust filters.

The side brush sweeps debris into the path of the main brush. The Power Throw brush is used to help pick up bulky debris. The main brush sweeps debris from the floor into the hopper. The vacuum system pulls dust and air through the hopper and the hopper dust filters.

PRE–OPERATION CHECKLIST

- ❑ Check the engine oil level.
- ❑ Check the engine coolant level.
- ❑ Check the windshield washer fluid level (when applicable).
- ❑ Check the radiator and hydraulic cooler fins for debris.
- ❑ Check the hydraulic fluid level
- ❑ Check the machine for fluid leaks.
- ❑ Check the air filter indicator.
- ❑ Check the skirts and seals for damage and wear.
- ❑ Check the condition of the main brush. Remove string, banding, plastic wrap, or other debris wrapped around the brush.
- ❑ Side Brush Option: Check the condition of the brush. Remove string, banding, plastic wrap, or other debris wrapped around the brush(es).
- ❑ Side Brush Option: Check the condition of the side brush skirt.
- ❑ Check for rubbing hoses or wires and leaks or obstructions.
- ❑ Check the condition of the hopper dust filter and seals. Clean as required.
- ❑ Check the brakes and steering for proper operation.
- ❑ Check the horn, headlights, taillights, safety lights, and backup alarm (if equipped).
- ❑ Check the fuel level.
- ❑ Empty the debris hopper.
- ❑ Check the service records to determine maintenance requirements.

STARTING THE MACHINE

1. Sit in the operator seat, engage the parking brake, and ensure the directional pedal is in neutral.

FOR SAFETY: When starting machine, keep foot on brake and directional pedal in neutral.

2. Turn the ignition switch clockwise to the ON position without starting the machine. The ”Wait to start, preheating” message appears on the EDM screen. The preheating message will leave the screen when the glow plugs are finished heating and the engine is ready to start.

3. Turn the ignition switch key clockwise until the engine starts.

NOTE: Do not operate the starter motor for more than 10 seconds at a time or after the engine has started. Allow the starter to cool between starting attempts or damage to the starter motor may occur.

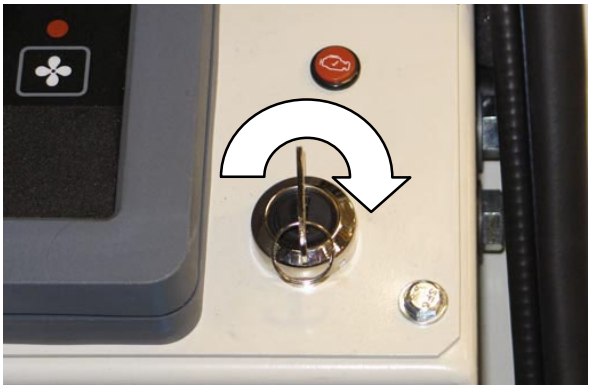

NOTE: The EDM (engine display module) may alert the operator that a DPF (Diesel Particulate Filter) regeneration is necessary. For instructions on how to initiate a DPF regeneration, see DPF REGENERATION in the MAINTENANCE section of this manual.

4. Allow the engine and hydraulic system to warm up three to five minutes.

WARNING: Machine emits toxic gases. Severe respiratory damage or asphyxiation can result. Provide adequate ventilation. Consult with your regulatory authorities for exposure limits. Keep engine properly tuned.

5. Press the *EDM (engine display module)* soft button below either 2000 RPM or 2400 RPM to elevate the engine RPM to a level adequate for cleaning.

6. Release the machine parking brake.

7. Turn on lights.

8. Drive the machine to the area to be cleaned.

TURNING OFF THE MACHINE

1. Stop sweeping.

2. Remove foot from the directional pedal. Step on the brake pedal.

3. Press the *EDM (engine display module)* soft button under 1350 RPM to lower the engine to idle.

4. Set the machine parking brake.

5. Turn the ignition switch key counterclockwise to turn off the engine. Remove the switch key.

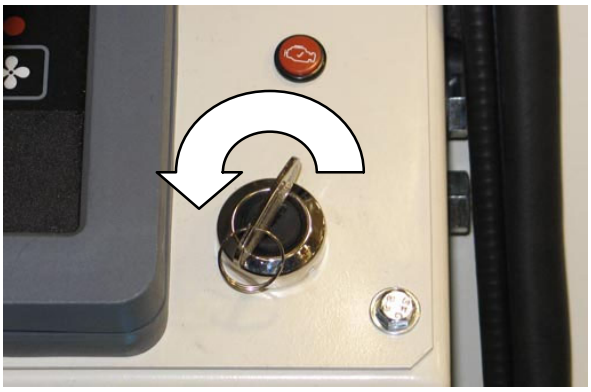

FOR SAFETY: Before leaving or servicing machine, do not park near combustible materials, dust, gases, or liquids. Stop on level surface, set parking brake, turn off machine, and remove key.

WHILE OPERATING THE MACHINE

IMPORTANT: This machine is equipped with a *DPF (Diesel Particulate Filter)* to meet the latest emissions requirements. This filter automatically burns all soot collecting in the *DPF* when the machine is operating at full power / capacity. When the machine has not been operated at full power to eliminate the soot from the *DPF*, the machine will need to run through a Regeneration process. The *EDM (engine display module)* alerts the operator when a regeneration process is required. For instructions how to initiate a DPF regeneration, see DPF REGENERATION in the MAINTENANCE section of this manual.

NOTE: Operate the machine at full power / capacity to avoid having to initiate a regeneration. See DPF REGENERATION in the MAINTENANCE section of this manual.

Pick up oversized debris before sweeping. Pick up wire, string, twine, large pieces of wood, or any other debris that could become wrapped around or tangled in the brushes.

Drive as straight a path as possible. Avoid bumping into posts or scraping the sides of the machine. Overlap the sweep paths by several centimeters (a few inches).

Avoid turning the steering wheel too sharply when the machine is in motion. The machine is very responsive to the movement of the steering wheel. Avoid sudden turns, except in emergencies.

Adjust the machine speed and brush pressure. Use the lowest brush pressure for best performance.

Keep the machine moving to prevent damaging floor finishes.

If poor cleaning performance is observed, stop cleaning and refer to *MACHINE TROUBLESHOOTING* in this manual.

Perform the Daily Maintenance Procedures after each use (see MACHINE MAINTENANCE in this manual).

Drive the machine slowly on inclines. Use the brake pedal to control machine speed on descending inclines. Sweep with the machine up inclines rather than down inclines.

FOR SAFETY: When using machine, go slowly on inclines and slippery surfaces.

FOR SAFETY: When using machine, do not raise hopper when machine is on an incline.

SWEEPING

NOTE: Operate the machine at full power / capacity to avoid having to initiate a regeneration. See DPF REGENERATION in the MAINTENANCE section of this manual.

1. Ensure that the hopper is completely lowered.

2. Press the *EDM (engine display module)* soft button below either 2000 RPM or 2400 RPM to elevate the engine RPM to a level adequate for cleaning.

NOTE: Operate the machine at either 2000 RPM or 2400 RPM when sweeping. Operating at 1350 RPM will reduce cleaning performance.

3. The hopper door must be closed during sweeping. If machine is equipped with the hopper door light option, be sure the hopper door light is off. If the hopper door light is on, close the hopper door.

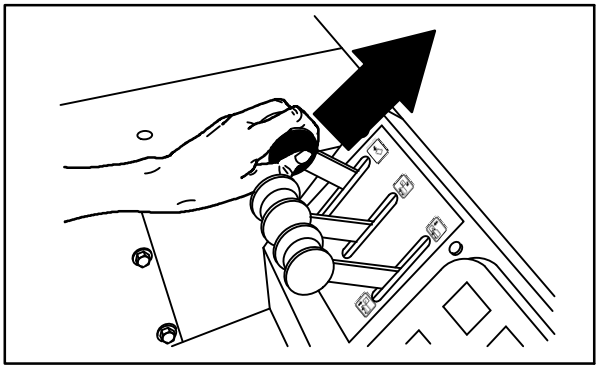

08476

4. Place the main brush switch in the **Normal** or **II Speed** position.

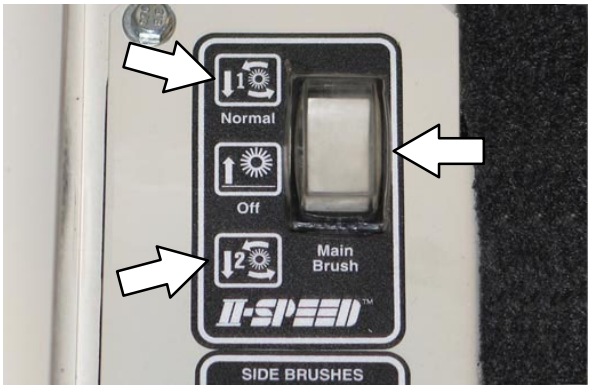

5. Push the top of the side brush switch into the **On**/**Down** position.

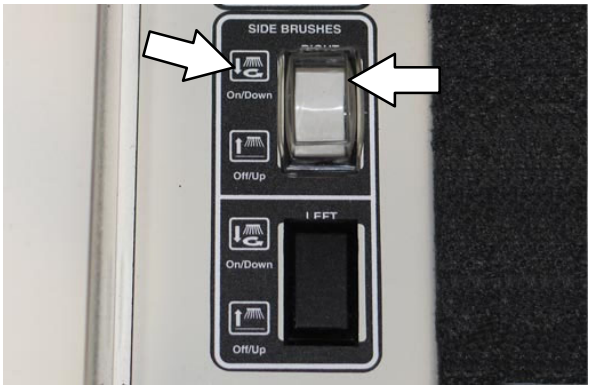

6. Press the vacuum fan switch to start the vacuum.

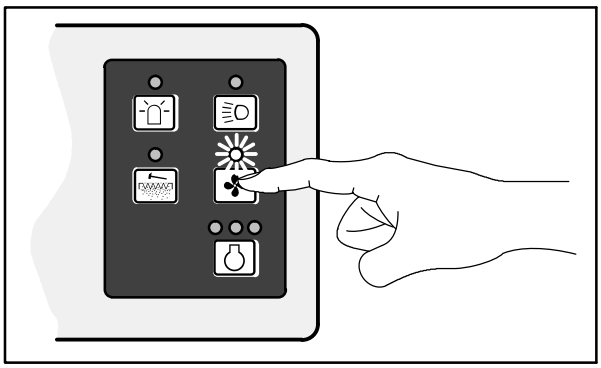

07769

7. Sweep as needed.

STOP SWEEPING

1. Push the bottom of the side brush switch into the **Off**/**Up** position.

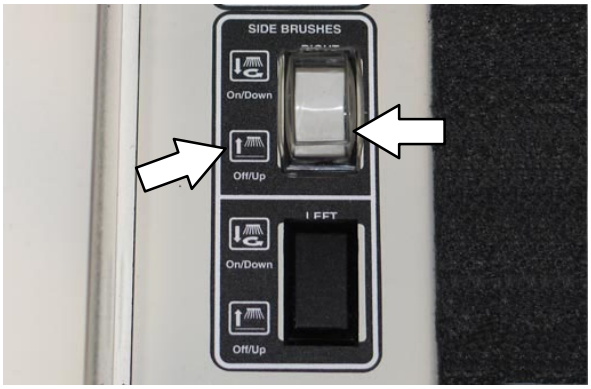

2. Place the main brush switch in the middle **Off** position.

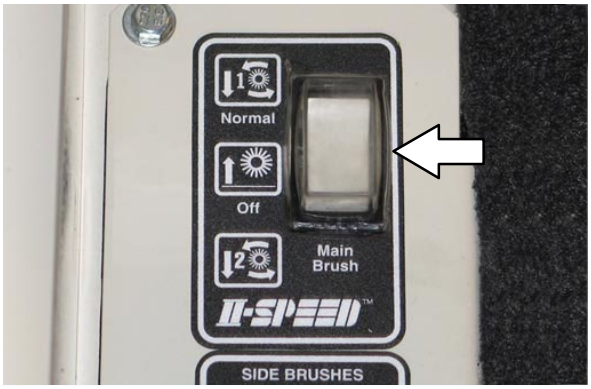

3. Press the filter shaker switch to shake the hopper dust filter.

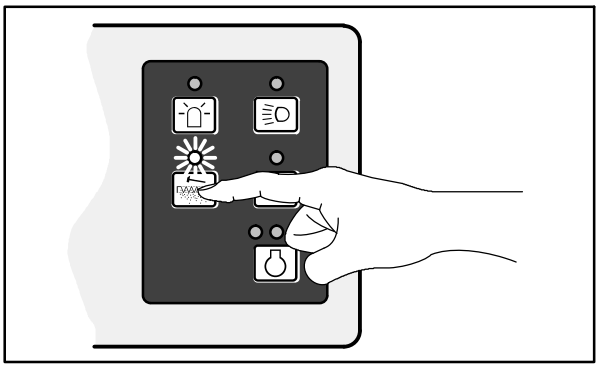

07767

EMPTYING THE HOPPER

1. Stop sweeping and shake the filter.
2. Slowly drive the machine to the debris site or debris container.
3. Pull and hold the hopper lift lever in the **Up** position to raise the hopper to the desired height.

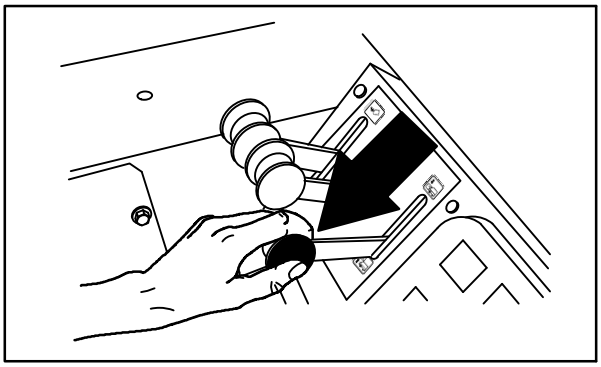

08480

FOR SAFETY: When using machine, do not raise hopper when machine is on an incline. Make sure adequate clearance is available before raising hopper.

NOTE: Be aware that the minimum ceiling height needed to high dump the hopper is 3355 mm (11 ft).

4. Release the hopper lift lever up and into the middle (Hold) position.

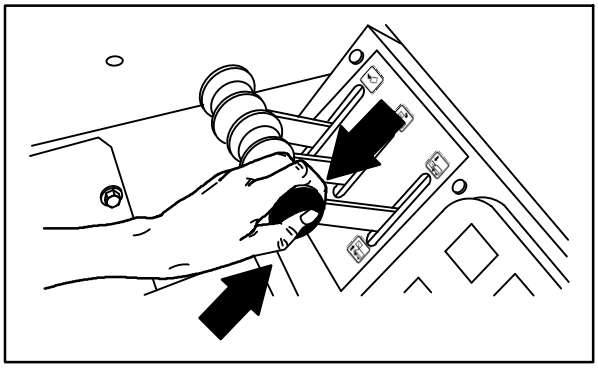

08481

5. Drive the machine up to the debris container.

FOR SAFETY: When using machine, move machine with care if hopper is raised.

6. Pull and hold the hopper rollout lever into the **Out** position.

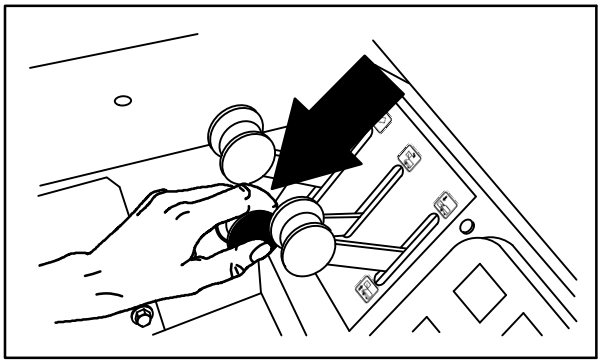

08477

7. Lower the hopper into the debris container to control dust.
8. Pull and hold the hopper door lever into the **Open** position.

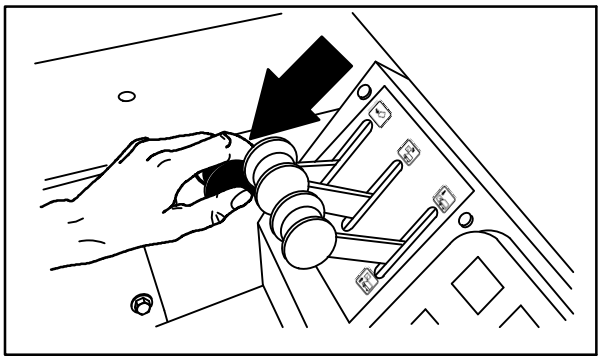

08474

9. Raise the hopper enough and/or close the hopper door to clear the top of the debris container.
10. Slowly back the machine away from the debris site or debris container.

FOR SAFETY: When using machine, move machine with care when hopper is raised.

11. Push and hold the hopper door lever into the **Close** position.

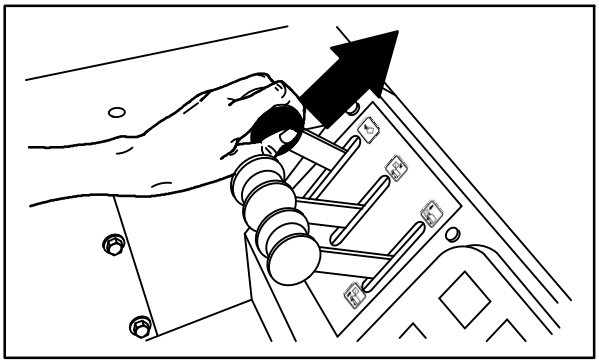

08476

12. Push and hold the hopper rollout lever into the **In** position.

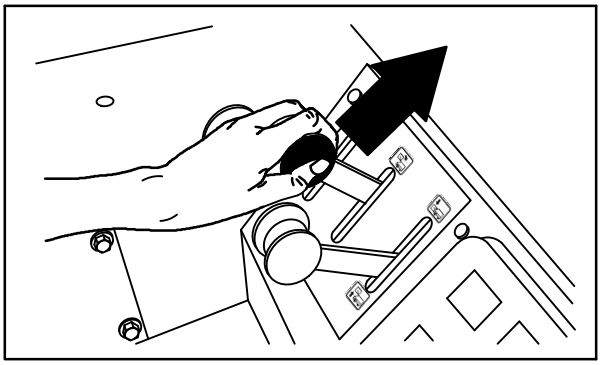

08479

13. Push and hold the hopper lift lever in the **Down** position.

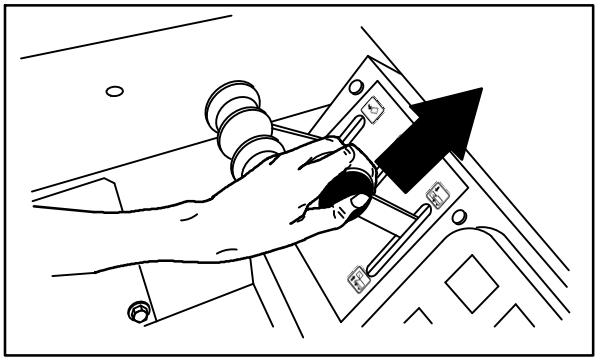

08482

NOTE: The hopper lift lever, hopper rollout lever, and the hopper door lever can be use together to lift the hopper, rollout the hopper, and open the hopper door.

ENGAGING HOPPER SUPPORT BAR

1. Set the machine parking brake.

FOR SAFETY: When starting machine, keep foot on brake and directional pedal in neutral.

2. Start the machine.

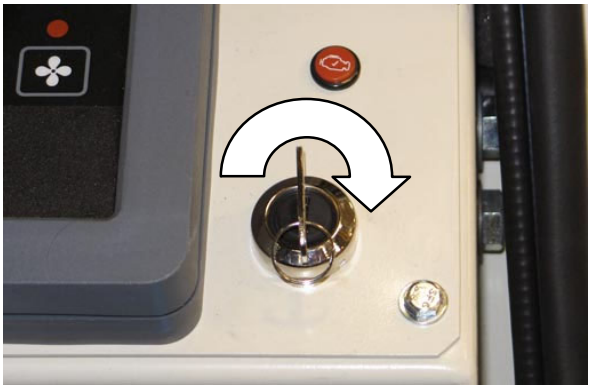

3. Raise the hopper all the way up.

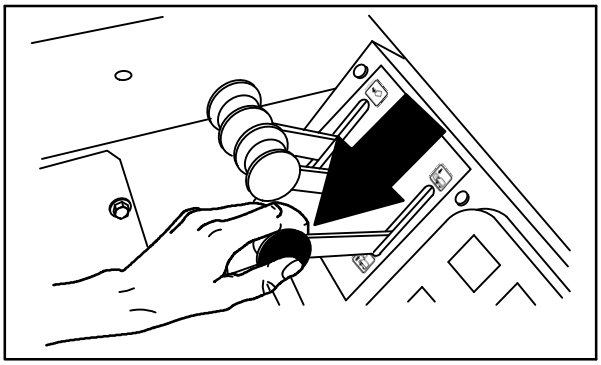

08480

FOR SAFETY: When using machine, make sure adequate clearance is available before raising hopper.

NOTE: Be aware that the minimum ceiling height needed to high dump the hopper is 2490 mm (98 in).

4. Remove the support bar from the storage clip.

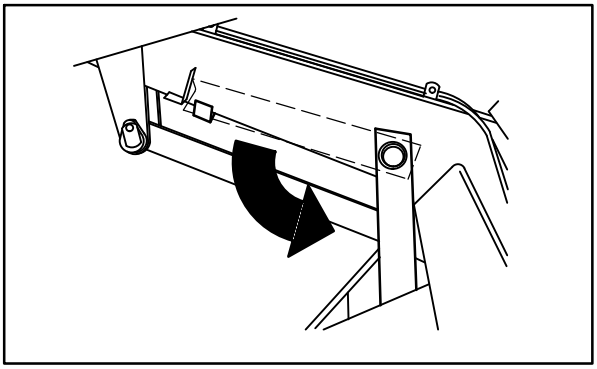

08589

WARNING: Raised hopper may fall. Engage hopper support bar.

5. Lower and position the hopper support bar onto the support bar stop.

6. Slowly lower the hopper so the hopper support bar rests on the support bar stop.

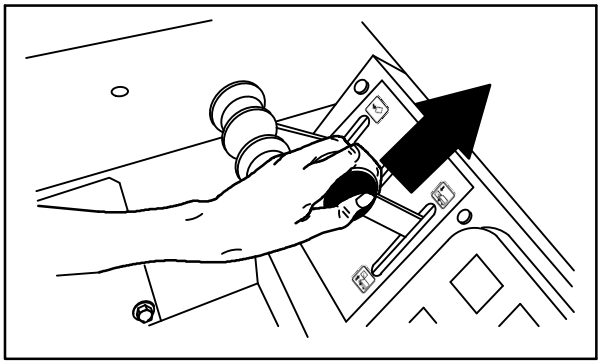

08482

WARNING: Lift arm pinch point. Stay clear of hopper lift arms.

7. Turn off the engine.

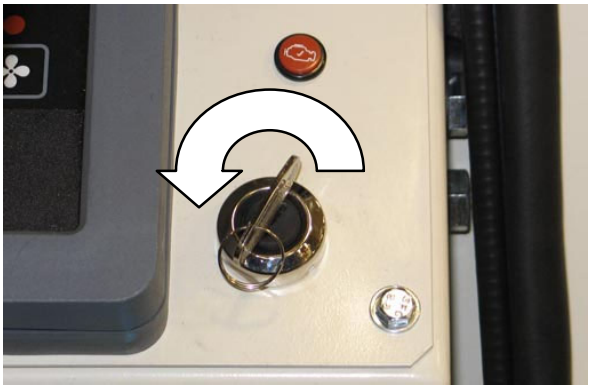

DISENGAGING HOPPER SUPPORT BAR

1. Start the machine.

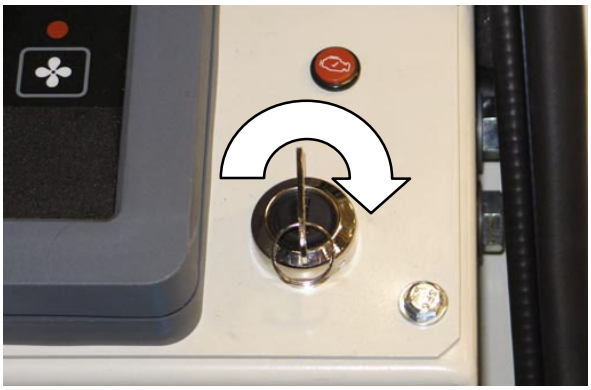

FOR SAFETY: When starting machine, keep foot on brake and directional pedal in neutral.

2. Raise the hopper slightly to release the hopper support bar.

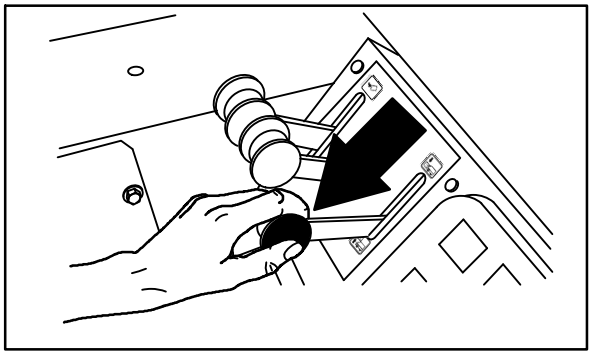

08480

3. Put the hopper support bar in the storage clip.

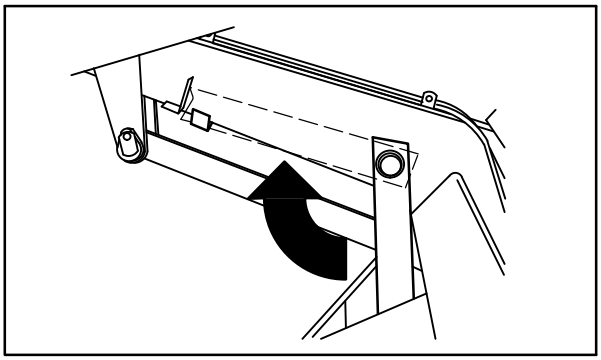

08590

WARNING: Lift arm pinch point. Stay clear of hopper lift arms.

4. Lower the hopper.

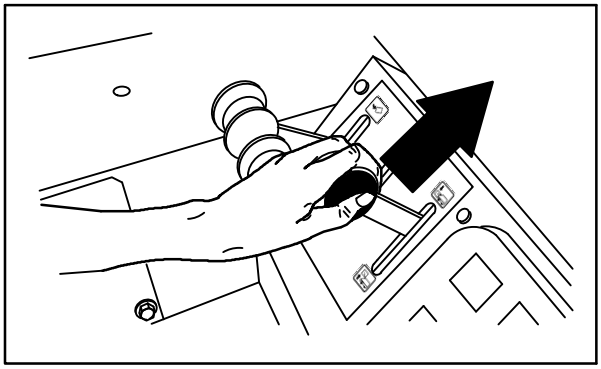

08482

5. Turn off the engine.

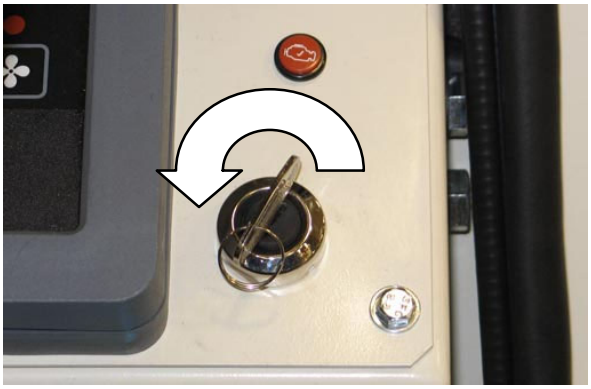

OPTIONS

VACUUM WAND

The vacuum wand uses the machine vacuum system. The vacuum hose and wand allow pick-up of debris that is out of reach of the machine.

1. Stop the machine within reach of the area to be vacuumed.

2. Set the machine parking brake.

NOTE: If the operator is not in the seat, the parking brake must be engaged or the machine will automatically shut off after 2 seconds.

3. Press the vacuum fan switch to turn off the vacuum fan. The indicator light above the switch will go off.

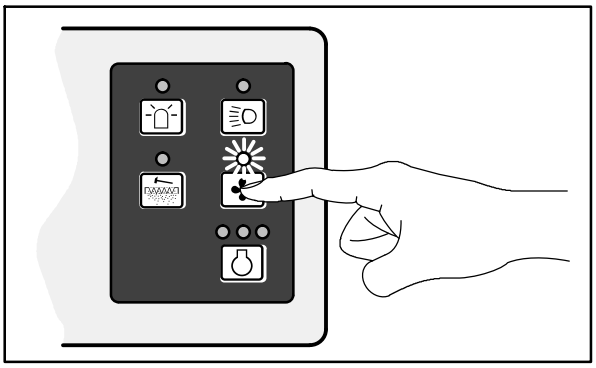

07769

4. Place the main brush switch into the middle **Off** position to turn off and lift the main brush.

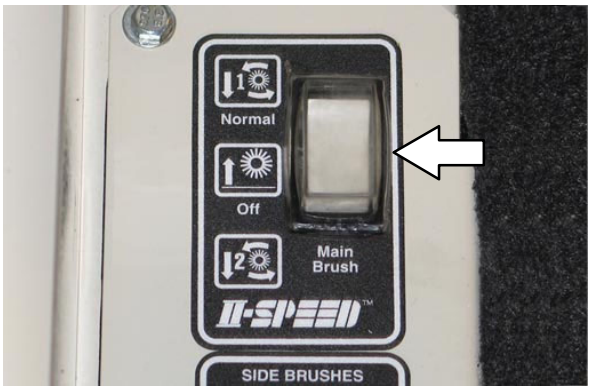

5. Place the bottom of the side brush switch(es) into the **Off**/**Up** position to turn off and lift the side brush(es).

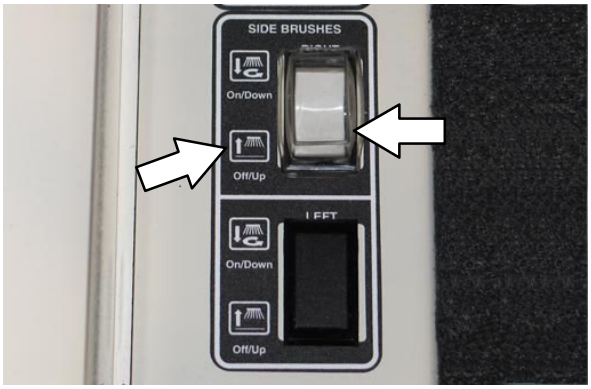

6. Turn off the engine.

7. Open the forward hopper access door and engage the lift arm.

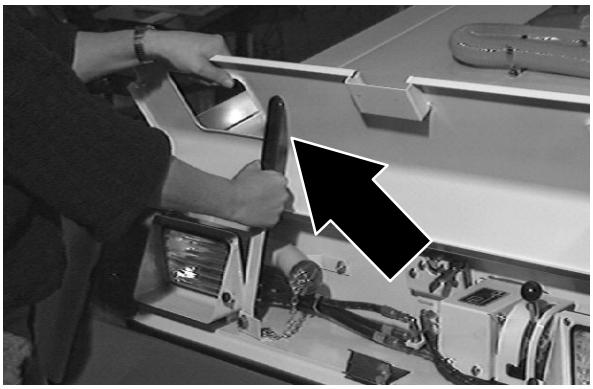

8. Remove the vacuum plug from the vacuum adaptor tube in front of the hopper.

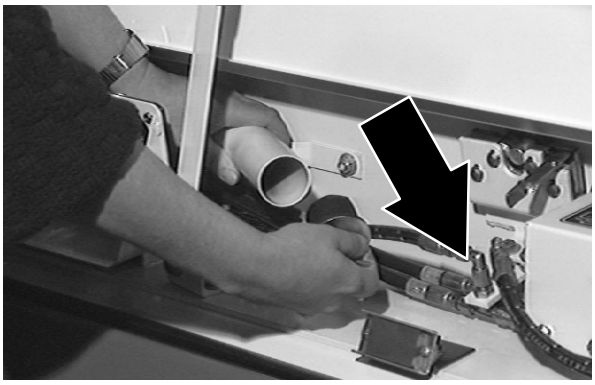

9. Remove the vacuum wand and hose from the mounting clips and assemble them together.

10. Connect the vacuum hose to the vacuum adaptor tube in front of the hopper.

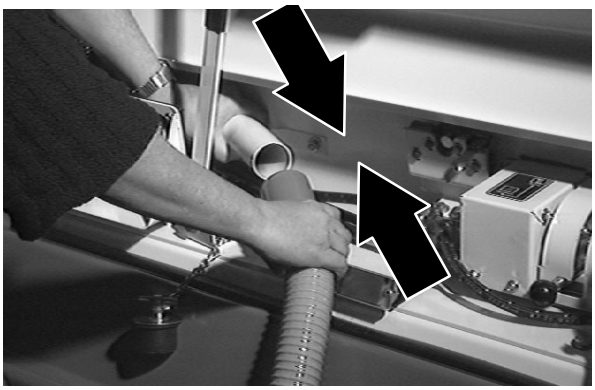

11. Slide the vacuum door lever down and to the left into the locked position to close the vacuum door.

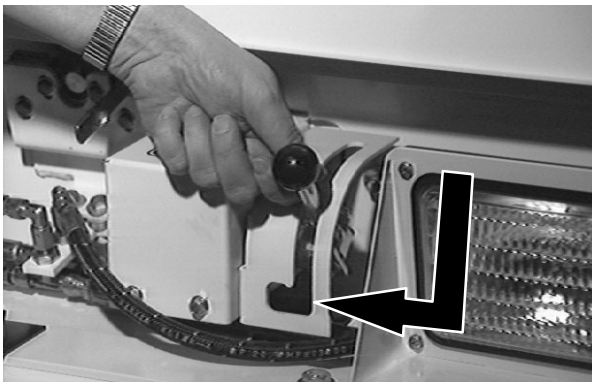

12. Start the engine.

13. Press the vacuum fan switch to turn on the vacuum. The indicator light above the switch will go on.

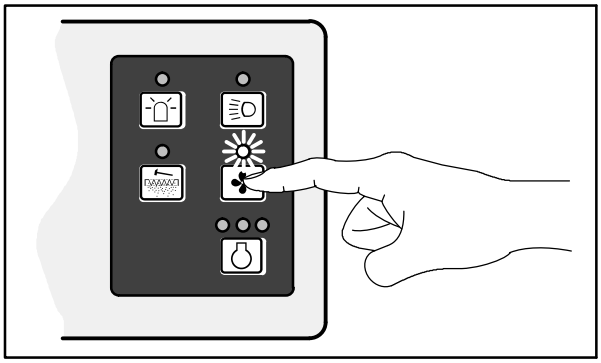

07769

14. Vacuum the area as needed.

WARNING: Accident may occur. Do not operate vacuum wand while driving.

15. When done vacuuming, press the vacuum fan switch to turn off the vacuum fan. The indicator light above the switch will go off.

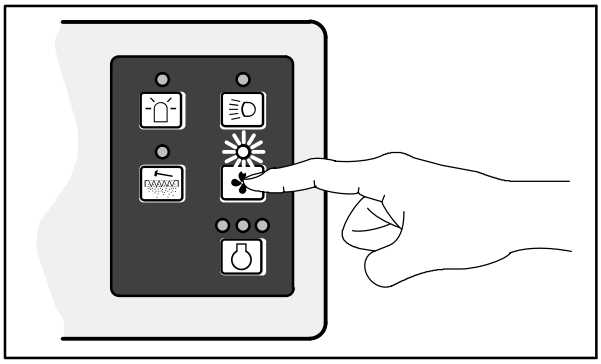

07769

16. Slide the vacuum door lever to the right and up from the locked position to open the vacuum door.

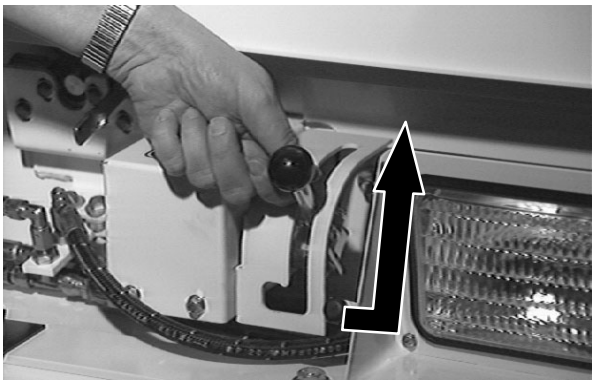

17. Disconnect the vacuum hose from the vacuum adaptor tube in front of the hopper.

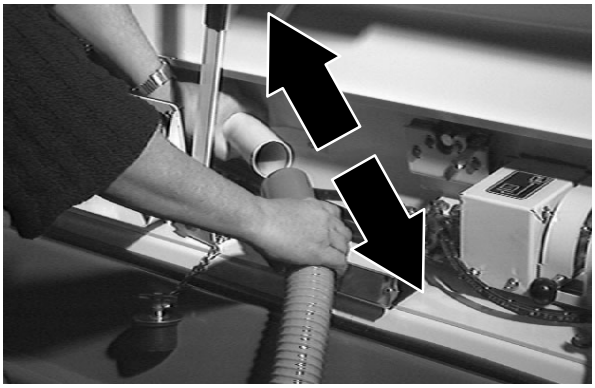

18. Disassemble the vacuum hose assembly and place back onto the hopper in the mounting clips.

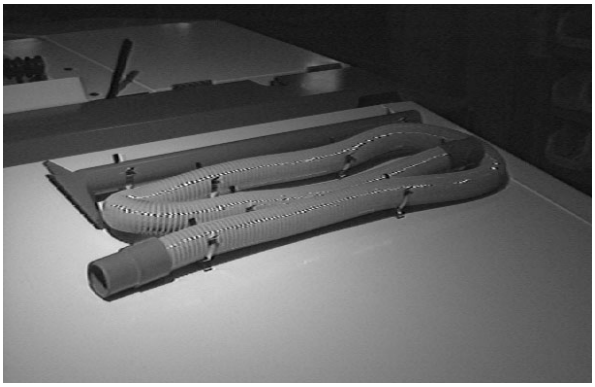

19. Reinstall the vacuum plug into the vacuum adaptor tube in front of the hopper, disengage the lift arm, and close the forward hopper access door.

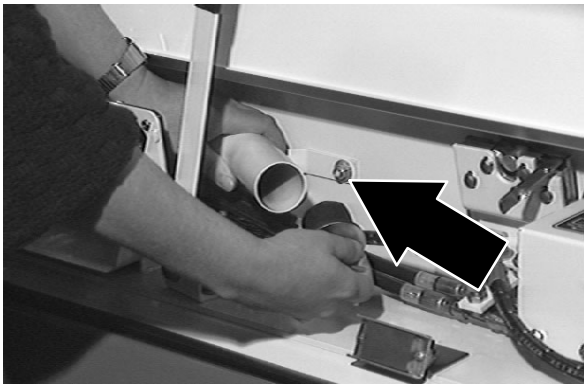

REGENERATIVE FILTER SYSTEM (RFS)

The Regenerative Filter System (RFS) is an option that alternately turns on the filter shaker motors when the filters need cleaning because of a build−up of dust or debris.

Normally the RFS does not require the operator to stop the machine to shake the filters during sweeping operation (except in extreme and severe dust environments). However, it is recommended that the filters are shaken at the operator's initiative each time the hopper is dumped. This can be accomplished during transit to a dump sight. *AVOID* shaking the filters while hopper is in a rolled out position. To initiate a shaking cycle, press the filter button on the instrument panel. See *FILTER SHAKER SWITCH.*

In very severe dust environments, the plugged filter indicator on the instrument panel may remain lit. When this occurs, it is recommended that the operator stop the machine and initiate one or two shake cycles to clear a possible plugged filter condition. After shaking, roll the hopper out to evacuate the dust tray. Resume sweeping operation.

If the hopper is over full, the light may come on. Check the hopper load and dump if necessary.

If the filter light remains on after all the above conditions are corrected, the filters may be plugged or the RFS may be inoperative. Filters may be shaken by the operator initiative by pressing the filter button on the instrument panel if there is a failure in the RFS control system.

Successful operation of the RFS option requires clean, undamaged filters. Plugged filters may cause the RFS to cycle continuously even at start up. The option also requires good sealing of the upper lid to the hopper, as well as a good seal between the two upper filter chambers.

It is recommended that the machine be driven for some test sweeping with the RFS option at initial start up. This next step assumes the hopper cover and upper filter chamber of the hopper was cleaned thoroughly prior to installation of the RFS option. Sweep for 30 minutes and open the hopper cover to check the integrity of the seals. Look at the top of the shaker panels and the underside of the hopper cover. Check for any signs of *dust tracking* that may be caused by a bad seal or filter. Repair as necessary. Perform this check periodically while using the sweeper with the RFS option.

MACHINE TROUBLESHOOTING

Problem	Cause	Remedy
Excessive dusting	Brush skirts and dust seals worn, damaged, out of adjustment	Replace or adjust brush skirts or dust seals
	Hopper dust filter clogged	Shake and/or clean or replace dust filter
	Main brush operating in **II Speed**	Operate main brush in **Normal** speed
	Vacuum hose damaged	Replace vacuum hose
	Vacuum fan seal (vacuum fan inlet bracket) damaged	Replace seal
	Vacuum fan failure	Contact TENNANT service personnel
	Hopper door partially or completely closed	Open the hopper door
	Thermo−Sentry tripped	Reset Thermo Sentry
	Fabric presceen missing on dust filters	Clean filter elements and install fabric prescreen
Poor sweeping performance	Brush bristles worn	Replace brushes
	Main and side brushes not adjusted properly	Adjust main and side brushes
	Debris caught in main brush drive mechanism	Free drive mechanism of debris
	Main brush drive failure	Contact TENNANT service personnel
	Side brush drive failure	Contact TENNANT service personnel
	Hopper full	Empty hopper
	Hopper floor skirts worn or damaged	Replace floor skirts
	Hopper door partially or completely open	Close the hopper door
	Wrong sweeping brush	Contact TENNANT representative for recommendations

MAINTENANCE

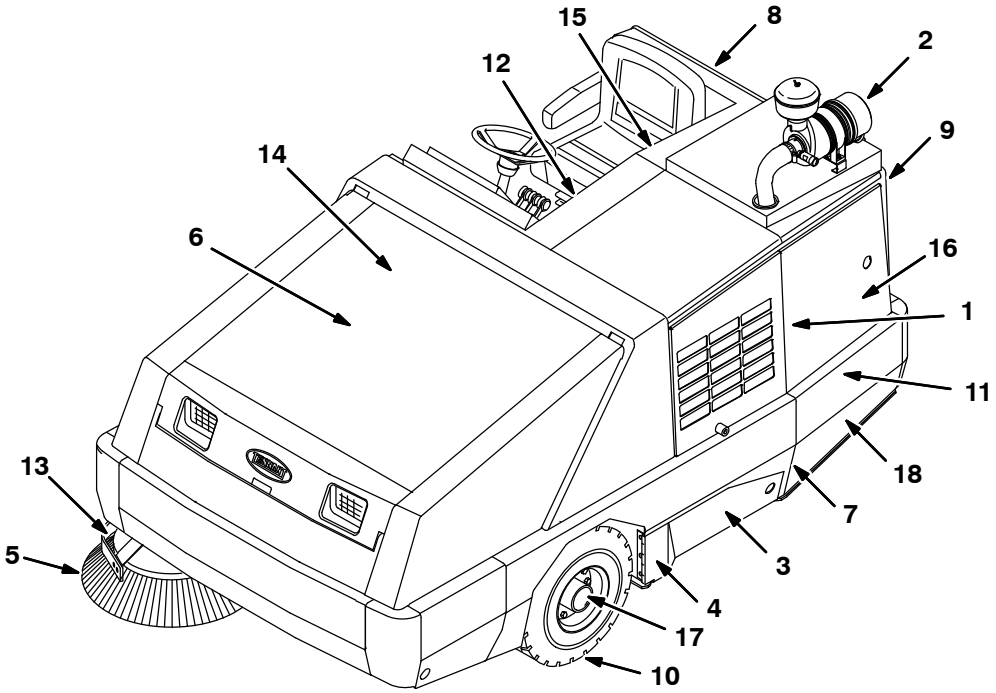

MAINTENANCE CHART

The table below indicates the *Person Responsible* for each procedure.
O = Operator
T = Trained Personnel

Interval	Person Resp.	Key	Description	Procedure	Lubricant/ Fluid	No. of Service Points
Daily	O	1	Engine	Check oil level	EO	1
				Check fan belt for damage and wear	–	1
				Check coolant level in reservoir	WG	1
	O	2	Engine air filter	Check indicator	–	1
				Empty dust cap	–	1
	O	8	Hydraulic fluid reservoir	Check fluid level	HYDO	1
	O	3	Brush compartment skirts	Check for damage, wear, and adjustment	–	6
	O	4	Hopper lip skirts / Hopper side skirt	Check for damage, wear, and adjustment	–	3
	O	3	Main brush	Check for damage and wear	–	1
	O	5	Side brush	Check for damage and wear	–	1
				Check brush pattern	–	1
	O	6	Hopper dust filter	Shake	–	2

The table below indicates the *Person Responsible* for each procedure.
O = Operator.
T = Trained Personnel.

Interval	Person Resp.	Key	Description	Procedure	Lubricant/ Fluid	No. of Service Points
50 Hours	O	3	Main brush	Rotate end-for-end	–	1
	T	3	Main brush	Check brush pattern. Adjust as necessary.	–	1
	O	6	Hopper dust filter	Check / clean	–	2
	T	7	Main brush adjustment	Lubricate	SPL	1
	T	1	Engine	Check fuel lines and clamps for wear and leaks	–	All
				Drain water / fuel separator	–	1
100 Hours	T	9	Hydraulic fluid cooler	Clean cooler fins		1
	T	1	Engine	■ Change oil and oil filter element	EO	1
				Clean radiator core exterior		1
	O	10	Tires	Check pressure	–	3
	O	3	Main brush and hopper seals	Check for damage or wear	–	12
	T	1	Air conditioner belt (option)	Check tension	–	1
	T	–	Air conditioner filter (option)	Clean, or replace if necessary	–	1
200 Hours	T	1	Engine	Steam clean exterior	–	1
	T	11	Rear wheel support bearings	Lubricate	SPL	2
	T	12	Parking brake	Check adjustment	–	1
	T	13	Side brush pivot pins	Lubricate	SPL	1
250 Hours	T	1	Engine	Check radiator hoses and clamps for wear and leaks	–	All
				Check fan belt adjustment	–	1
				Check air intake hoses	–	1
	T	2	Engine air filter	Clean air filter element	–	1
400 Hours	T	14	Brake master cylinder	Check fluid level	BF	1
	T	1	Engine	Flush radiator and replace coolant	–	1

LUBRICANT/FLUID
BF . . . . Brake fluid.
EO . . . . SAE 10W–30 Engine oil, API diesel classification CJ–4 or better, CF / SH.
HYDO . **Tennant*True*** premium hydraulic fluid or equivalent
SPL . . . Special lubricant, Lubriplate EMB grease (TENNANT part no. 01433–1)
WG . . . Water and ethylene glycol anti-freeze, –34° C (–30° F)

NOTE: More frequent intervals may be required in extremely dusty conditions.

NOTE: Check procedures indicted (■) after the first 50-hours of operation.

The table below indicates the *Person Responsible* for each procedure.
O = Operator.
T = Trained Personnel.

Interval	Person Resp.	Key	Description	Procedure	Lubricant/ Fluid	No. of Service Points
500 Hours	T	1	Engine	Replace fuel filter	–	1
				Replace fan belt	–	1
				Clean dust from grill and radiator fins	–	1
800 Hours	T	8	Hydraulic reservoir	Replace filler cap	–	
	T	–	Hydraulic hoses	Check for wear and damage	–	All
	T	11	Propelling motor	■ Torque shaft nut	–	1
	T	11	Front / rear wheels	■ Torque wheel nuts	–	1
	T	15	Battery	■ Clean and tighten battery cable connections	–	1
1000 Hours	T	1	Engine	Check valve clearance	–	4
1200 Hours	T	16	Hydraulic fluid filter	Change filter element	–	1
1500 Hours	T	1	Engine	Replace oil separator element	–	1
				Check PCV (Positive Crankcase Ventilation) valve	–	1
				Check EGR (Exhaust Gas Recirculation) cooler for damage	–	1
1600 Hours	T	17	Front wheel bearings	Check, lubricate, and adjust	SPL	2
2400 Hours	T	8	Hydraulic fluid reservoir	Replace suction strainer	–	1
				Change hydraulic fluid	HYDO	1
3000 Hours	T	18	DPF (Diesel Particulate Filter)	Send to Authorized Service Center for cleaning	–	1
	T	1	Engine	Check turbocharger for leaks	–	1

LUBRICANT/FLUID
BF . . . . Brake fluid.
EO . . . . SAE 10W–30 Engine oil, API diesel classification CJ–4 or better, CF / SH.
HYDO . **Tennant*True*** premium hydraulic fluid or equivalent
SPL . . . Special lubricant, Lubriplate EMB grease (TENNANT part no. 01433–1)
WG . . . Water and ethylene glycol anti-freeze, –34° C (–30° F)

NOTE: More frequent intervals may be required in extremely dusty conditions.

NOTE: Check procedures indicted (■) after the first 50-hours of operation.

The table below indicates the *Person Responsible* for each procedure.
O = Operator.
T = Trained Personnel.

Interval	Person Resp.	Key	Description	Procedure	Lubricant/ Fluid	No. of Service Points
1 Year	T	1	Engine	Check EGR (Exhaust Gas Recirculation) hoses	–	All
				Check exhaust manifold for damage / leaks	–	1
	T	2	Engine air filter	Replace air filter element	–	1
	T	18	DPF (Diesel Particulate Filter)	Check sensor tubes and hoses	–	All
2 Years	T	1	Engine	Replace oil separator hoses	–	1
				Replace turbo sensor pressure hose	–	1
				Replace EGR (Exhaust Gas Recirculation) cooler hose	–	1
				Replace turbo charger lubricant hose	–	1
				Replace fuel hoses and clamps	–	All
				Replace air intake hoses	–	All
				Replace cooling system hoses and clamps	–	All
	T	18	DPF (Diesel Particulate Filter)	Replace pressure sensor hoses	–	2

LUBRICANT/FLUID
BF . . . . Brake fluid.
EO . . . . SAE 10W–30 Engine oil, API diesel classification CJ–4 or better, CF / SH.
HYDO . **Tennant*True*** premium hydraulic fluid or equivalent
SPL . . . Special lubricant, Lubriplate EMB grease (TENNANT part no. 01433–1)
WG . . . Water and ethylene glycol anti-freeze, –34° C (–30° F)

NOTE: More frequent intervals may be required in extremely dusty conditions.

NOTE: Check procedures indicted (■) after the first 50-hours of operation.

LUBRICATION

FOR SAFETY: Before leaving or servicing machine, stop on level surface, set parking brake, turn off machine, and remove key.

REAR WHEEL SUPPORT

Lubricate the rear wheel support bearing after every 200 hours of operation.

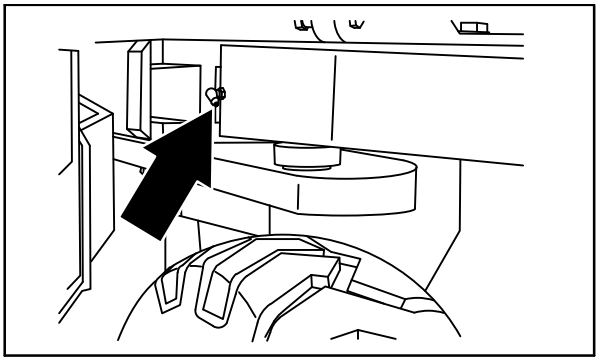

08451

FRONT WHEEL BEARINGS

Repack and adjust the front wheel bearings after every 1600 hours of operation.

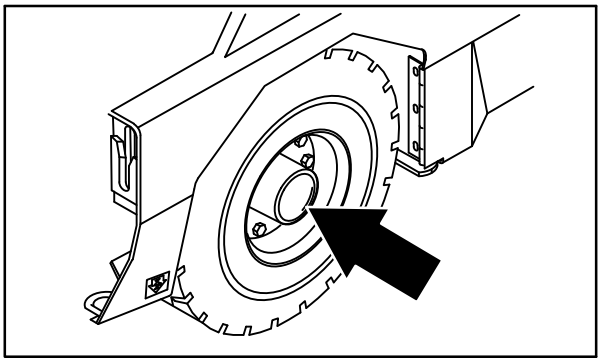

08579

SIDE BRUSH PIVOT PINS

Lubricate the side brush pivot pins after every 200 hours of operation.

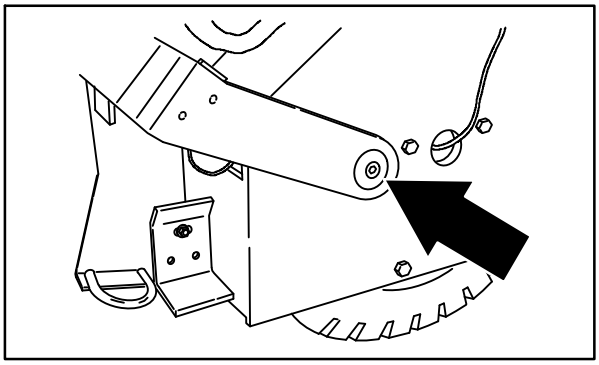

08581

MAIN BRUSH ADJUSTMENT

Lubricate the main brush adjustment after every 50 hours of operation.

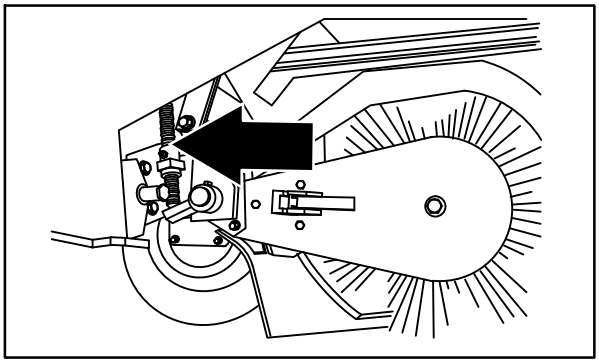

08934

HYDRAULICS

FOR SAFETY: Before leaving or servicing machine, stop on level surface, set parking brake, turn off machine, and remove key.

HYDRAULIC FLUID RESERVOIR

The hydraulic fluid reservoir is located behind the operator seat.

Check the hydraulic fluid level at operating temperature daily. Make sure the hopper is down when checking hydraulic fluid level. The sight gauge is marked with FULL (black line) and ADD (red line) levels to indicate the level of hydraulic fluid in the reservoir.

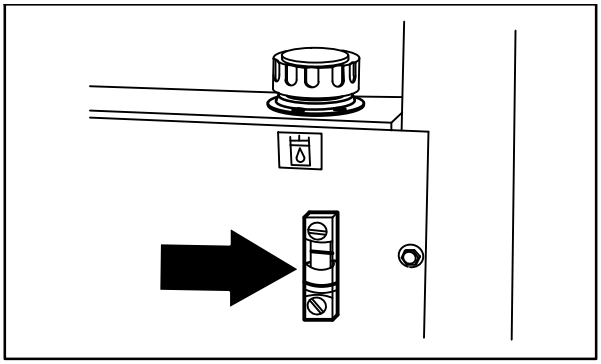

08430

A filler cap with a built-in breather is mounted on top of the hydraulic reservoir. Replace the cap every 800 hours of operation.

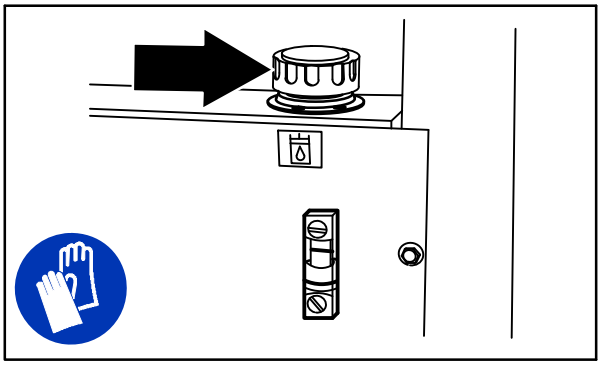

08430

Lubricate the filler cap gasket with a film of hydraulic fluid before putting the cap back on the reservoir.

ATTENTION! Do not overfill the hydraulic fluid reservoir or operate the machine with a low level of hydraulic fluid in the reservoir. Damage to the machine hydraulic system may result.

Drain and refill the hydraulic fluid reservoir with new **Tennant*True*** premium hydraulic fluid after every 2400 hours of operation.

The reservoir has a built-in strainer outlet that filters hydraulic fluid before it enters the system. Replace the strainer after every 2400 hours of operation.

The hydraulic fluid filter is located in the engine compartment. Replace the filter element after every 1200 hours of operation or if the clogged hydraulic filter light remains on. Check the hydraulic fluid level and refill as needed.

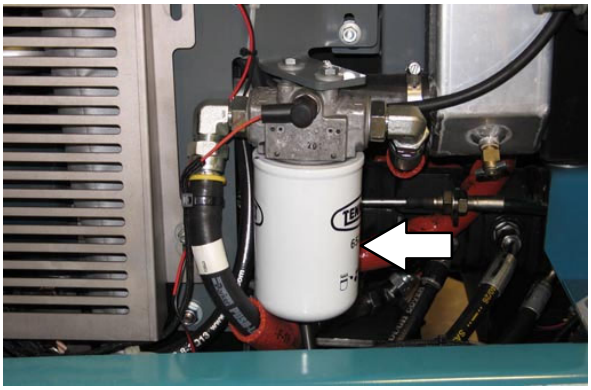

HYDRAULIC FLUID

There are three fluids available for different temperature ranges:

Tennant*True* premium hydraulic fluid (Extended Life)			
Part Number	**Capacity**	**ISO Grade Viscosity Index (VI)**	**Ambient Air Temperature Ranges**
1057710	3.8 L (1 gal)	ISO 100 VI 126 or higher	29° C (85° F) or higher
1057711	19 L (5 gal)		
1057707	3.8 L (1 gal)	ISO 32 VI 163 or higher	7° C (45° F) or lower
1057708	19 L (5 gal)		

If using a locally–available hydraulic fluid, be sure the specifications match the Tennant hydraulic fluid specifications. Substitute fluids can cause premature failure of hydraulic components.

ATTENTION! Hydraulic components depend on system hydraulic fluid for internal lubrication. Malfunctions, accelerated wear, and damage will result if dirt or other contaminants enter the hydraulic system.

HYDRAULIC HOSES

Check the hydraulic hoses after every 800 hours of operation for wear or damage.

FOR SAFETY: When servicing machine, use cardboard to locate leaking hydraulic fluid under pressure.

High pressure fluid escaping from a very small hole can almost be invisible, and can cause injury.

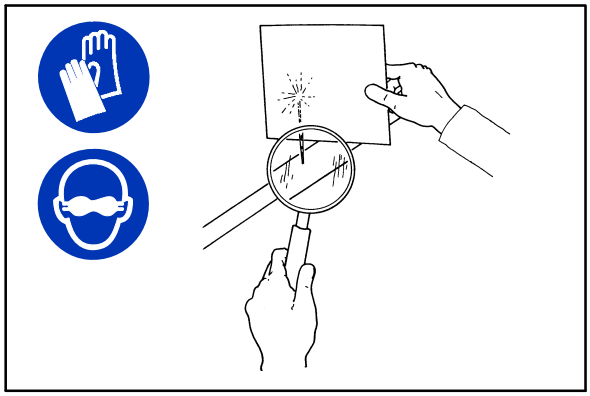

00002

Contact appropriate personnel if a leak is discovered.

ATTENTION: Only use TENNANT supplied hydraulic hoses or equivalent rated hydraulic hoses.

ENGINE

FOR SAFETY: Before leaving or servicing machine, stop on level surface, set parking brake, turn off machine, and remove key.

ENGINE OIL

NOTE: All oil must be drained from the engine before a different brand of oil or a different viscosity oil is used. ***Do Not*** *mix different brands of oil or different viscosity oil with the oil already in the engine.*

Check the engine oil level daily. Change the engine oil and oil filter after the first 50 hours of machine operation, and then after every 100 hours of operation.

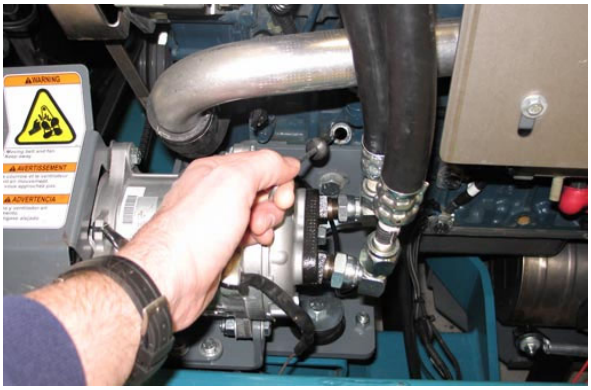

The engine oil drain is located on the engine oil pan. Drain the engine oil when it is warm.

Fill the engine with oil until the oil is between the indicator marks on the dipstick. DO NOT fill past the top indicator mark. The engine oil capacity is 6.6 L (7 qt) including the oil filter.

COOLING SYSTEM

FOR SAFETY: When servicing machine, avoid contact with hot engine coolant. Do not remove cap from radiator when engine is hot. Allow engine to cool.

Check the coolant level in the reservoir daily. The coolant level must be between the two indicator marks when the engine is cold. Refer to the coolant manufacturer for water/coolant mixing instructions.

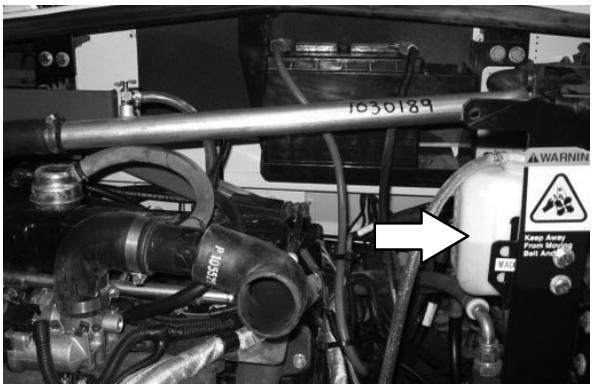

Check the radiator hoses and clamps after every 250 hours of operation. Tighten loose clamps. Replace damaged hoses and clamps.

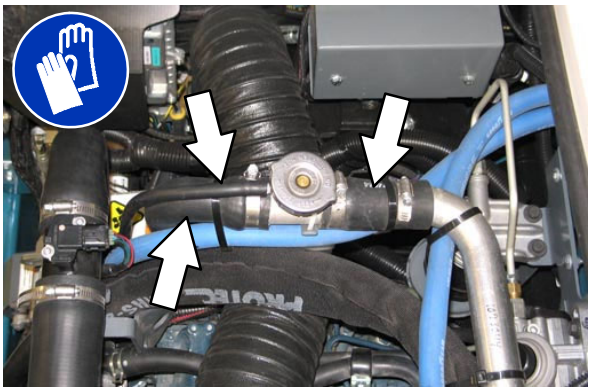

Check the radiator core exterior and hydraulic cooler fins after every 100 hours of operation. Blow or rinse (with low pressure air or water) all dust through the grill and radiator fins, the opposite direction of normal air flow after every 500 hours of operation. Be careful to not bend the cooling fins when cleaning. Clean thoroughly to prevent the fins from becoming encrusted with dust. To avoid cracking the radiator, allow the radiator and cooler fins to cool before cleaning.

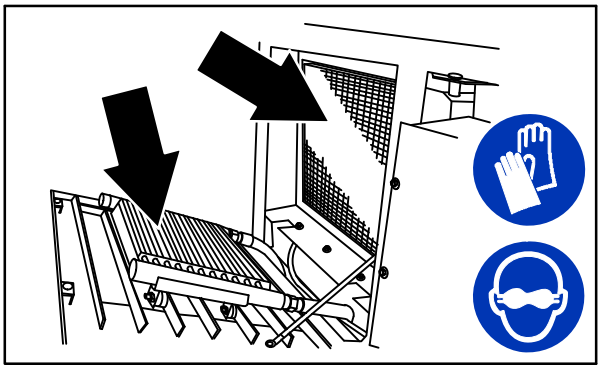

08454

Flush the radiator and the cooling system after every 400 hours of operation.

Replace the radiator hoses and clamps every two years.

ENGINE BELT

Check the the engine fan belt for wear and damage daily. Check the engine belt tension after 250 hours of operation. Adjust tension as necessary. Proper belt tension is 7 to 9 mm (0.28 to 0.35 in) from a force of 10 kg (22 lb) applied at the mid-point of the longest span.

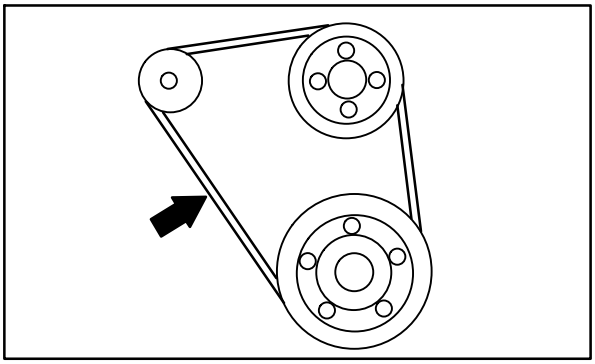

08935

Replace the engine fan belt after every 500 hours of operation.

AIR CONDITIONING BELT (OPTION)

FOR SAFETY: Before leaving or servicing machine, stop on level surface, set parking brake, turn off machine, and remove key.

Check the engine belt tension after every 100 hours of operation. Adjust the tension as necessary. Proper belt tension is 4 to 7 mm (0.025 to 0.25 in) from a force of 25 to 27 kg (55 to 60 lb) applied at belt midpoint.

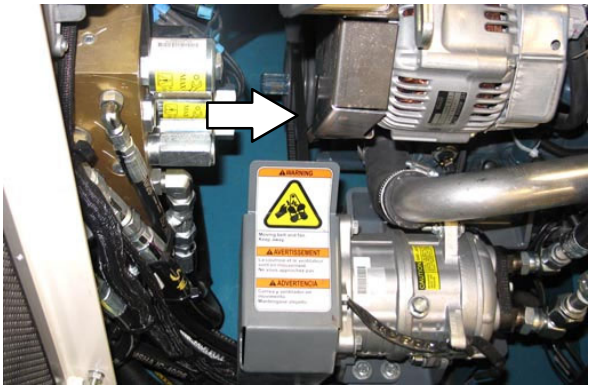

DRAINING WATER FROM THE WATER / FUEL SEPARATOR

FOR SAFETY: When servicing machine, keep flames and sparks away from fuel system service area. Keep area well ventilated.

Drain water from the water / fuel separator after every 50 hours of operation.

Turn the key to the on position without starting the engine.

Turn the water / fuel separator fitting located on the bottom of the water / fuel separator approximately a half turn to open the drain.

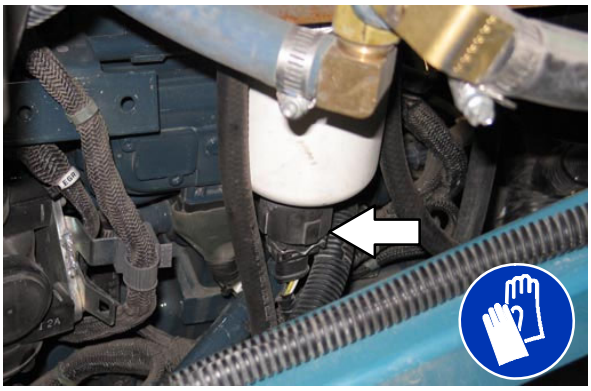

Press the pump several times to drain the water from the water / fuel separator.

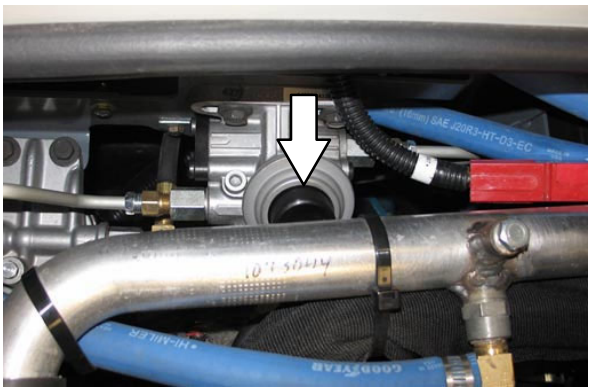

Close the water / fuel separator fitting.

FUEL LINES

Check the fuel lines after every 50 hours of operation. If a clamp band is loose, apply oil to the screw of the band and securely tighten the band.

The rubber fuel lines can become worn–out whether the engine has been used much or not. Replace the fuel lines and clamp bands every two years.

FOR SAFETY: When servicing machine, keep flames and sparks away from fuel system service area. Keep area well ventilated.

If the fuel lines and clamp bands are found worn or damaged before two years; replace or repair them at once. Bleed the fuel system after replacement of any fuel lines, see PRIMING THE FUEL SYSTEM. When the fuel lines are not installed, plug both ends with clean cloth or paper to prevent dirt from entering the lines. Dirt in the lines can cause a fuel injection pump malfunction.

PRIMING THE FUEL SYSTEM

Typical diesel fuel systems require priming to remove pockets of air from the fuel lines and fuel components. This is usually required after running out of fuel, changing fuel filter elements or repairing a fuel system component. Air in the fuel prevents smooth engine operation. Refer to the engine manufacturer's manual for additional information.

FUEL FILTERS

Replace the three fuel filters after every 500 hours of operation.

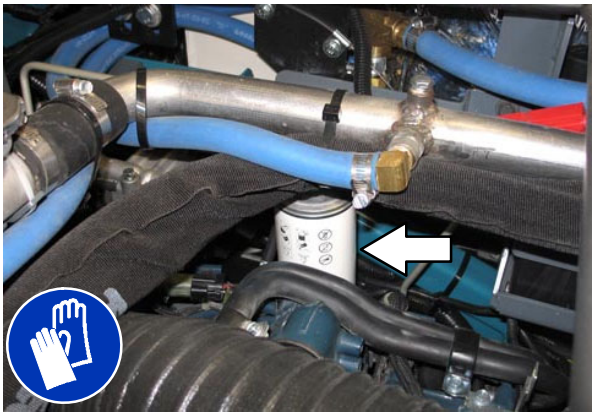

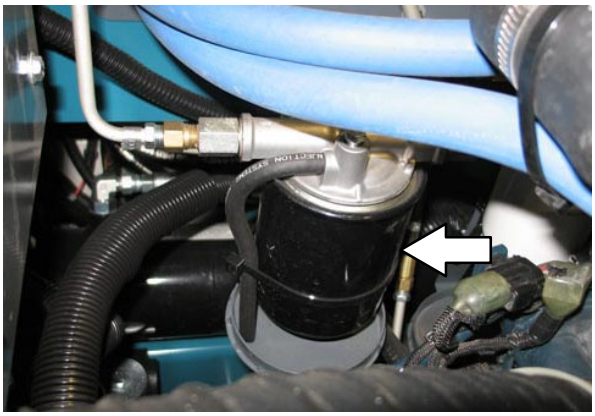

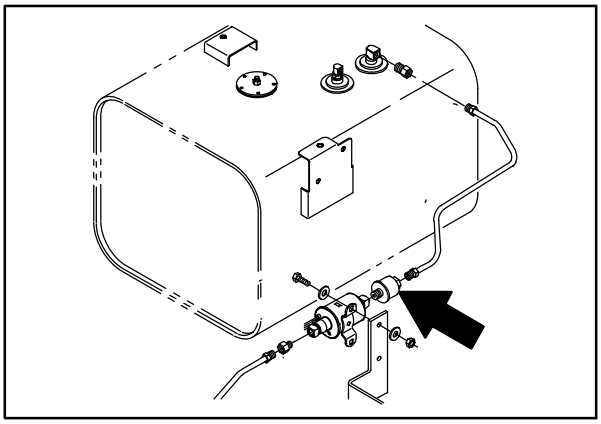

OIL SEPARATOR ELEMENT

Replace the oil separator element after every 1500 hours of operation.

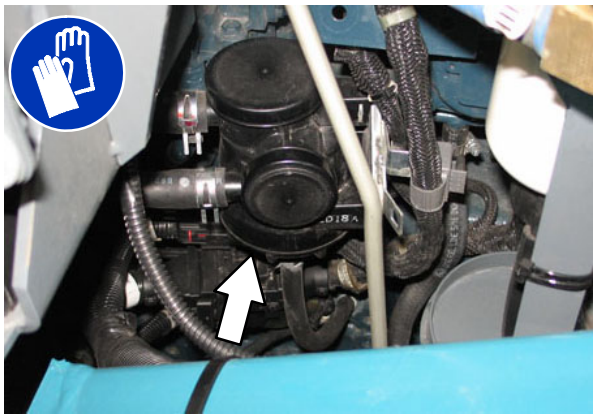

Replace the oil separator hoses every two years.

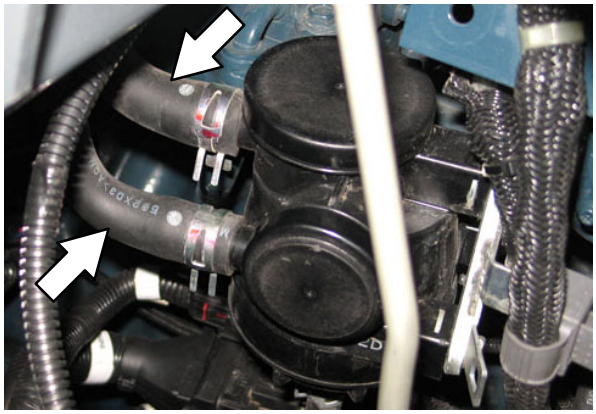

PCV (POSITIVE CRANKCASE VENTILATION) VALVE

Check the PCV after every 1500 hours of operation.

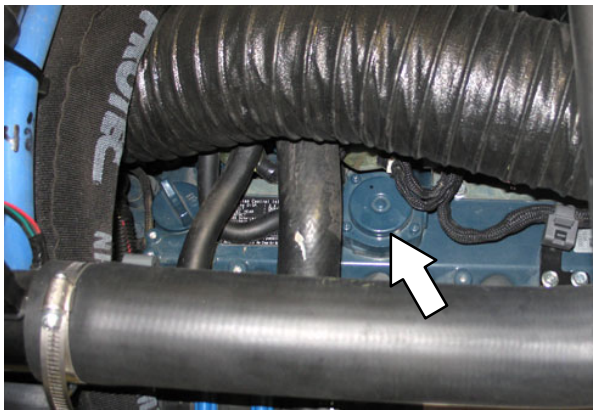

EGR (EXHAUST GAS RECIRCULATION) COOLER

Check the EGR cooler for damage after every 1500 hours of operation.

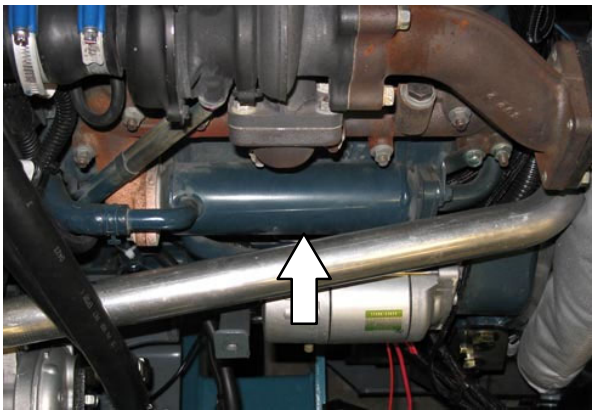

Check the EGR tubing and hoses for leaks and damage yearly.

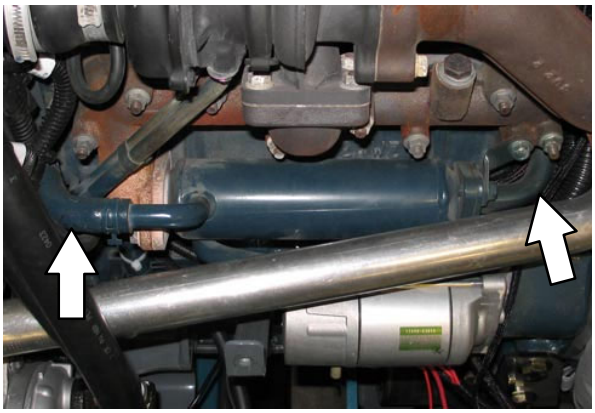

Replace the EGR cooler hoses every two years.

DPF (DIESEL PARTICULATE FILTER)

Send the DPF to an authorized service center for cleaning after every 3000 hours of operation.

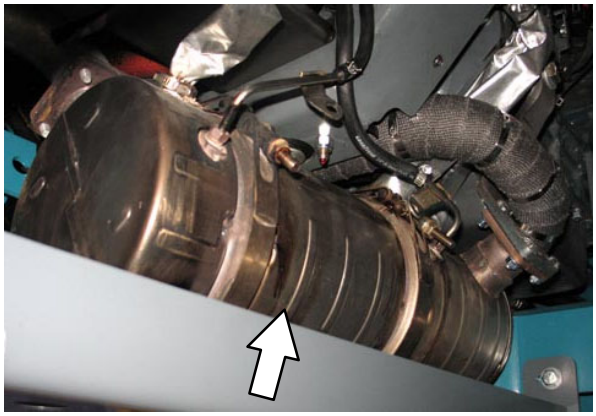

Check the DPF pressure sensor tubes and hoses for leaks and damage yearly.

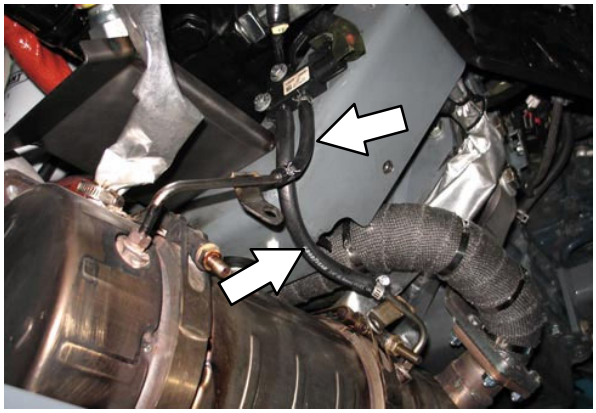

Replace the DPF pressure sensor hoses every two years.

EXHAUST MANIFOLD

Check the exhaust manifold for damage and leaks yearly.

TURBO CHARGER

Check the turbo charger for leaks after every 3000 hours of operation.

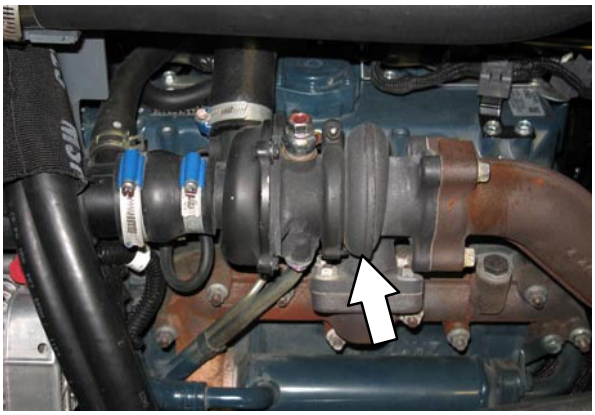

Replace the turbo charger sensor pressure hose every two years.

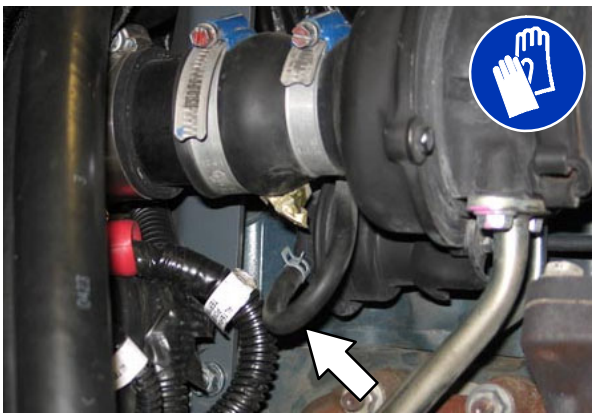

Replace the turbo charger lubricant hose every two years.

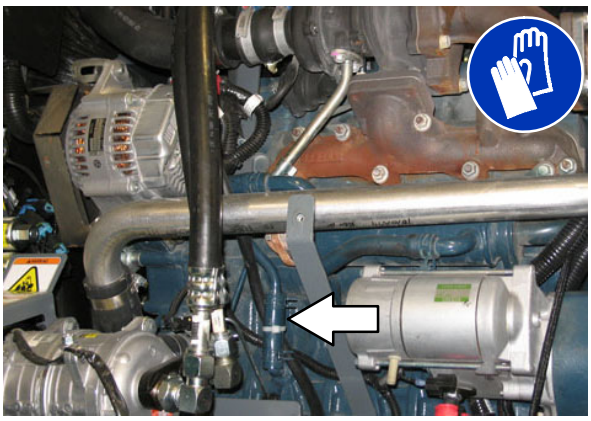

VALVE CLEARANCE

Check and adjust the valve clearance to 0.18 to 0.22 mm (0.0071 to 0.0086 in) while the engine is cold after every 1000 hours of operation.

AIR INTAKE HOSES

Check the air intake hoses leaks and damage after every 250 hours of operation.

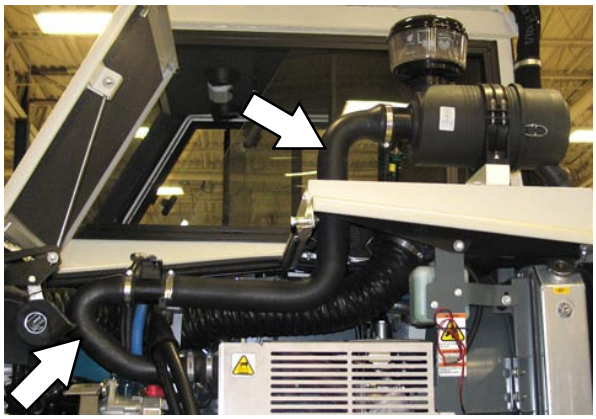

Replace the air intake hoses every two years.

AIR FILTER INDICATOR

Check the indicator daily. The indicator red line will move as the air filter element fills with dirt. Do not replace the air filter element until the red line reaches 5 kPa (20 in H_2O) and the “SERVICE WHEN RED” window is filled with red. The engine must be running to get an accurate air indicator reading.

FOR SAFETY: When servicing machine, avoid moving parts. Do not wear loose clothing, jewelry, and secure long hair.

AIR FILTER ASSEMBLY

Empty the engine air filter dust cap daily.

Clean the air filter element after every 250 hours of operation. Replace the air filter element yearly.

FOR SAFETY: Before leaving or servicing machine, stop on level surface, set parking brake, turn off machine, and remove key.

Replace the air filter element when the air filter indicator shows restriction in the air intake system or the filter element is damaged. Refer to *AIR FILTER INDICATOR.*

Remove the filter element. Carefully clean the end cap and the interior of the housing with a damp cloth. Clean the housing sealing surfaces.

Install the filter element into the air filter housing and reinstall the dust cap with the water drain pointing down.

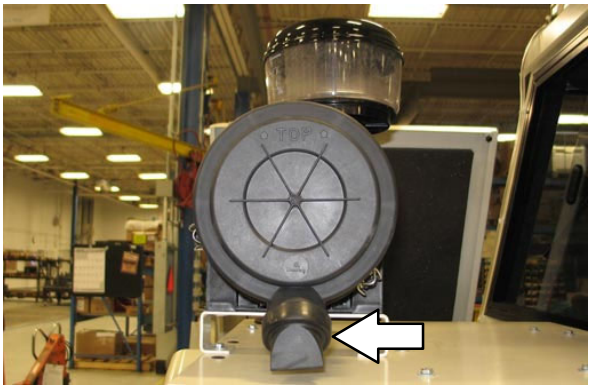

Push the reset button on the end of the indicator to reset the air filter indicator after replacing the air filter element.

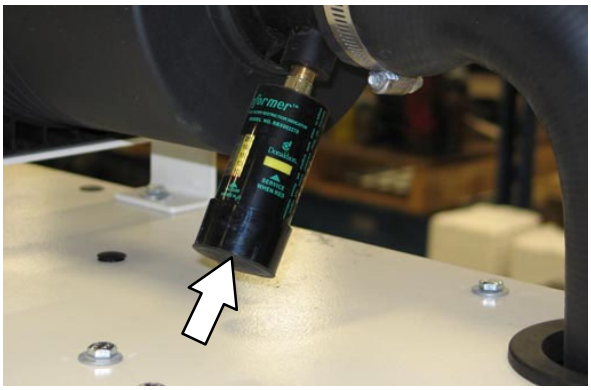

DPF (DIESEL PARTICULATE FILTER) REGENERATION

The *DPF* traps the soot from the exhaust system preventing it from being released into the atmosphere. This is needed to meet the latest emission requirements. As the machine is being operated, the trapped soot creates back pressure in the *DPF*. When this back pressure builds up, it will eventually affect engine performance and / or damage the engine if the soot is not eliminated through the ***regeneration*** process. The soot trapped inside the *DPF* is burned during the regeneration process eliminating the back pressure.

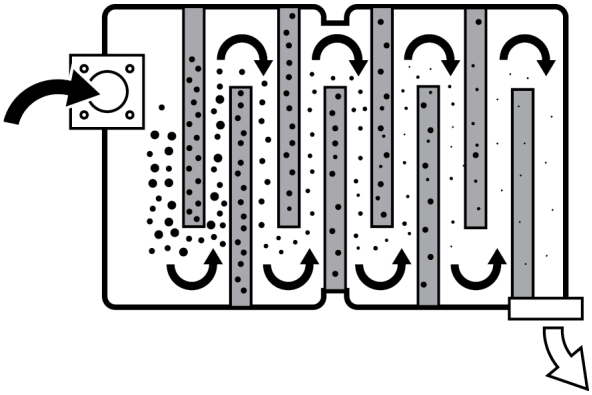

The machine automatically burns the soot collecting in the *DPF* when the machine is operating at the optimal power level (full power / capacity). The *DPF* gets clogged much more quickly when the machine is not run at the power optimal level. To avoid having to initiate active regenerations, always try to operate the machine at the optimum level.

A *DPF regeneration* is necessary when the *DPF* is significantly clogged. An alert appears on the *EDM (engine display module)* when a regeneration is necessary.

A regeneration may take between 20–40 minutes to complete depending on engine and ambient temperatures. Once a regeneration is started it should be allowed to complete. It is strongly *recommended* that the regeneration be done when the first yellow alert appears. The regeneration can be run at a later time, but each time the request is declined, soot will continue building up further diminishing engine performance and requiring a longer time to perform the next regeneration process.

If it is not possible to complete a Regeneration (due to work situation / conditions), press the soft button below the X (Deselect) to close the regeneration alert and return to the gauge view.

DPF (DIESEL PARTICULATE FILTER) ALERTS

The *EDM* will display colored DPF alerts starting with a yellow, proceed to orange and finally to red symbolizing the increase of the alert urgency.

Yellow alert: The *DPF* contains enough soot for an automatic active regeneration. The machine can still be used for cleaning and there is no change in engine performance. Regeneration can be done while sweeping at this level. It is recommended that a regeneration be performed at this level. See INITIATING A SWEEPING REGENERATION section.

Orange alert: The *DPF* contains enough soot for an automatic active regeneration. The machine can still be used for cleaning but there is some decrease in engine performance. A Sweeping or a Parked Regeneration can be done while at this level. It is strongly recommended that a regeneration be performed at this level since only a parked regeneration can be done if the machine is allowed to go beyond this alert. See INITIATING A SWEEPING REGENERATION section or INITIATING A PARKED REGENERATION section.

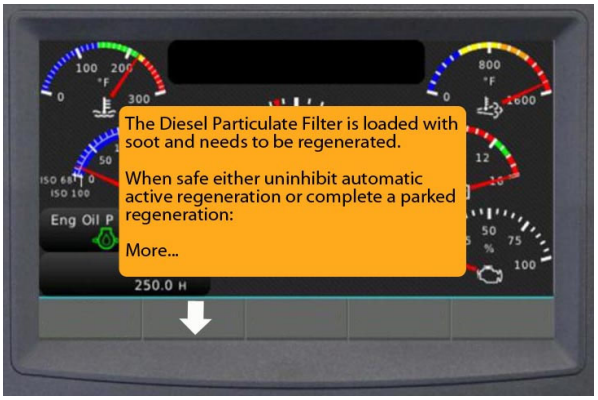

NOTE: Use soft button located under the Down arrow to see the full screen. Use soft button located under the Up arrow to go back to previous screen.

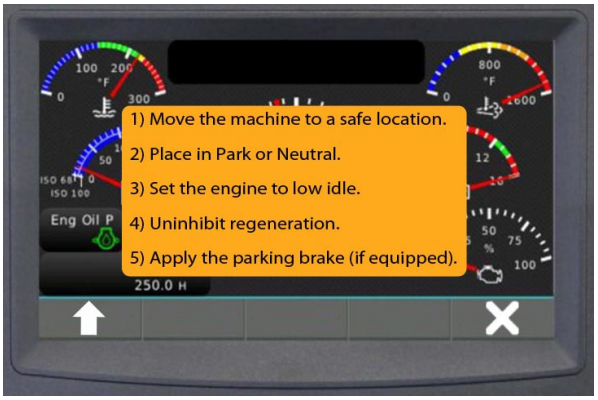

NOTE: If orange alerts are ignored, a shutdown warning will display and the engine will shut down every 5 minutes until a regeneration is completed. If a red alert appears and the display shows Excessive PM4 (P3007) or Excessive PM5 (P3008), then the operator can no longer initiate the regeneration process.

Red (URGENT) alert: The *DPF* is extremely loaded with soot and needs a PARKED regeneration. The machine should NO LONGER be used for cleaning as there is significant decrease in engine performance. It is imperative that an active parked regeneration be performed *immediately* after receiving this alert since this is the last alert that allows an operator initiated parked regeneration. See INITIATING A PARKED REGENERATION section.

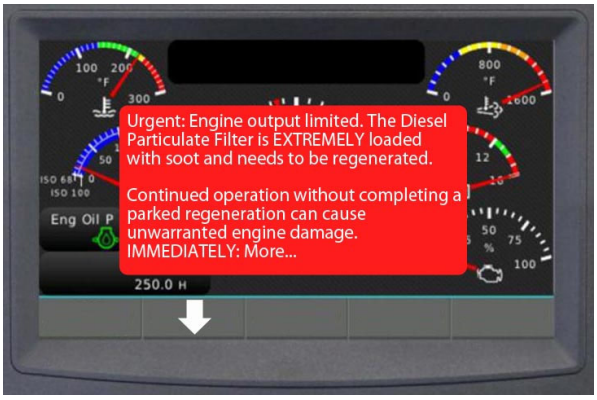

NOTE: Use soft button located under the Down arrow to see the full screen. Use soft button located under the Up arrow to go back to previous screen.

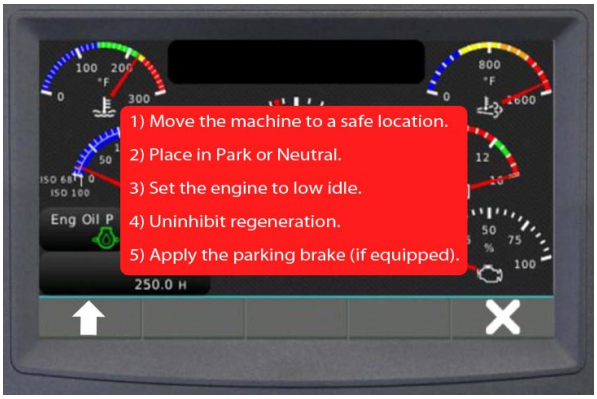

Refer to INITIATING A PARKED REGENERATION for instructions how to safely complete a parked regeneration.

2nd Red (URGENT) alert: If the first Red alert is ignored, the operator can no longer initiate the regeneration process. **A qualified service person will need to initiate the regeneration.** Park the machine immediately and call a qualified service person.

*NOTE: All DPF related repairs due to the ignored regeneration alerts **are** **not** covered under the machine warranty.*

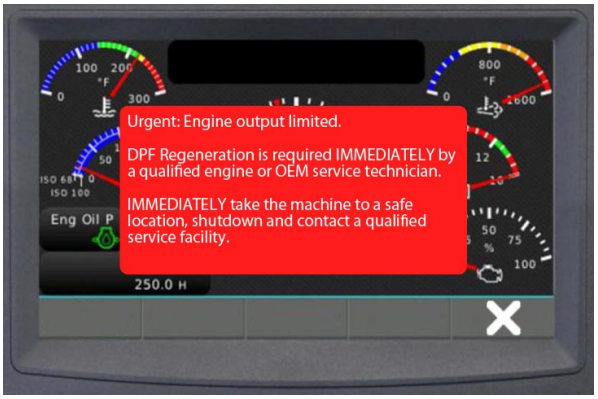

3rd Red (URGENT) alert: If the 2nd Red alert is ignored and the machine is not immediately turned off, the DPF will need to be either replaced or removed from the machine and sent to a qualified cleaning facility to be cleaned. This is a very costly repair and **is** **not** covered under the machine warranty.

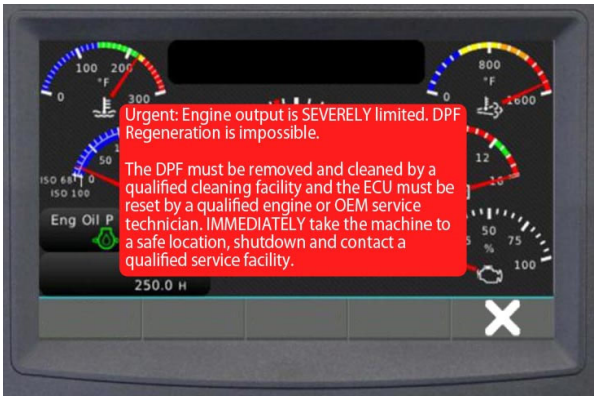

DPF (DIESEL PARTICULATE FILTER) STATUS ICONS

Monitor the color coded *DPF Status Icons* for DPF status.

Status Icon	Description
	Parking Brake – Green icon displays when the parking brake is set.
	Transmission Neutral – Green icon displays when the directional pedal is in neutral.
	Engine Exhaust High Temperature Lamp – Red icon displays during active DPF regeneration when the DPF outlet temperature is hot enough for a regeneration.
	DPF Lamp Command – Red icon is on solid during regeneration or blinking to request a parked regeneration. Yellow Icon is illuminated solid to request automatic active regeneration when regeneration is inhibited.
	DPF Regeneration set to Inhibit – Displays when the machine or the operator has inhibited a regeneration.

INITIATING A SWEEPING REGENERATION

The *EDM* defaults to the *Inhibited* setting. The DPF *inhibited* icon illuminates when a regeneration is inhibited. *Un–Inhibit* the system to initiate an active regeneration.

1. Press the soft button under *DPF Commands* to access the *Un–Inhibit* Regen command.

2. Select *Un–Inhibit Regen* from the menu and follow the on screen directions.

3. The *EDM* returns to the Inhibit default after the *Un–Inhibited* regeneration is complete.

INITIATING A PARKED REGENERATION

FOR SAFETY: Before initiating an active parked regeneration, stop on a level surface in a well ventilated open area. Park in low traffic areas away from pedestrians and other equipment. Do not park near combustible materials, dusts, gases, or liquids. Do not park indoors or in enclosed areas. Set parking brake. Do not leave machine unattended.

NOTE: All EDM (engine display module) error codes must be cleared before placing the machine into regeneration. The EDM will not allow the engine to regenerate if there are error codes on the display.

1. Drive the machine to a safe area for completing parked regeneration and release the propel pedal into the neutral position.

NOTE: The directional pedal must remain in the neutral position and all sweeping functions must remain off until regeneration is completed.

2. Press the *EDM* soft button under 1350 RPM to lower the engine to idle.

3. Set the parking brake. The parking brake icon on the *EDM* will be illuminated.

4. Read and follow the instructions on the *EDM*.

5. Press the soft button under *DPF Commands* to access the *Un–Inhibit Regen* command.

6. Select *Un–Inhibit Regen* from the menu.

7. Read the instructions on the *EDM* display. Press the soft button located under the Down arrow to navigate through the remainder of the alert.

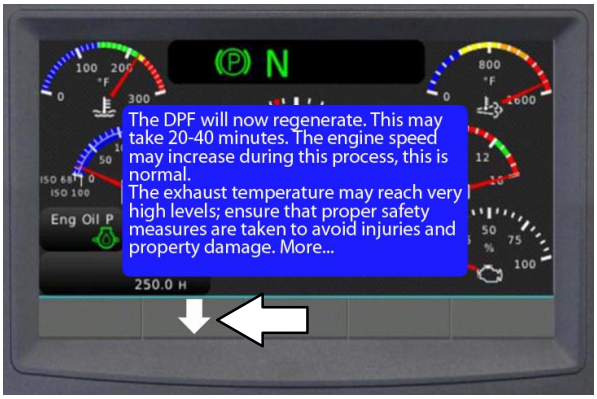

8. Press the soft button located below *Request Regen* to initiate the regeneration.

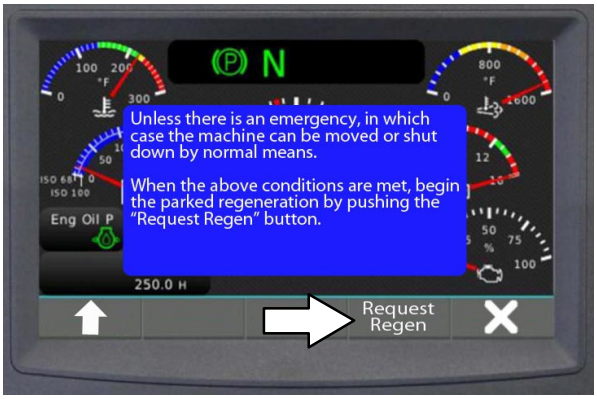

NOTE: Use the soft button located under the Up arrow to navigate back to previous screen.

NOTE: If the engine shuts down every 5 minutes, it will need to be restarted each time and regen command set to un–inhibit until the engine reaches operating temperature so a regeneration can occur.

9. Wait for the machine to complete the Parked Regeneration (may take 20–40 minutes to complete). The *DPF* icon and engine exhaust high temperature icon illuminate solid red while the machine is in parked regeneration.

NOTE: Do not touch the directional pedal, release the parking brake, or turn off the engine after placing the machine into parked regeneration.

NOTE: The engine exhaust high temperature icon Illuminates red during regeneration when the DPF outlet temperature is hot enough to start the regeneration process.

NOTE: Do not touch the directional pedal, release the parking brake, or turn off the engine after the machine is placed into parked regeneration. Do not stop the parked regeneration unless there are extenuating circumstances (safety issues) that require the parked regeneration to be prematurely stopped. ***Only if necessary****, press the soft button located below Stop Regen to stop the regeneration.*

NOTE: After a prematurely stopped parked regeneration the EDM may again display an alert that a regeneration is necessary the next time the machine is started and allowed to warm up to a temperature hot enough for a regeneration to be initiated, When circumstances allow, initiate another regeneration.

10. “DPF regeneration is complete” appears on the *EDM* display when the parked regeneration is complete. Press the soft button under X (Deselect) to close the message and return to the gauge display. The machine is ready for use.

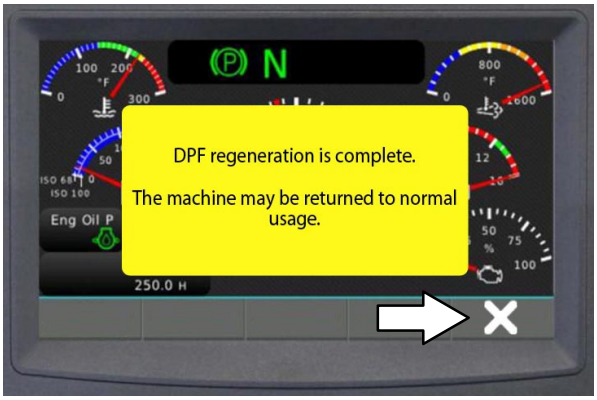

BATTERY

Clean and tighten the battery connections after the first 50 hours of operation and after every 800 hours after that. Do not remove the vent plugs from the battery or add water to the battery.

Remove the engine compartment access panel located in the operator compartment to access the battery.

FOR SAFETY: When servicing machine, avoid contact with battery acid.

CIRCUIT BREAKERS

Circuit breakers are resettable electrical circuit protection devices designed to stop the flow of current in the event of a circuit overload. Once a circuit breaker is tripped, it must be reset manually. Press the reset button after the breaker has cooled down.

If the overload that caused the circuit breaker to trip is still there, the circuit breaker will continue to stop current flow until the problem is corrected.

All but two of the circuit breakers are located in the operator compartment. There are two 30 Amp circuit breakers located behind the circuit breaker panel that can be accessed by raising the hopper. The self–resetting 30 Amp circuit breakers will reset themselves after cooling down.

Refer to the table below for the *circuit breakers* and the circuits protected.

Circuit Breaker	Rating	Circuit Protected
CB–1	15 A	Horn
CB–2	15 A	Filter shaker
CB–3	15 A	Controls
CB–4	15 A	Instrument panel
CB–5	15 A	Hazard light
CB–6	2.5 A	Brushes
CB–7	15 A	Left side brush option
CB–8	15 A	Cab accessories
CB–9	15 A	Accessories
CB–10	30 A	AC compressor/blower
CB–11	30 A	AC condenser/fans

DEBRIS HOPPER

The dust filters filter the air pulled up from the hopper. The dust filters are equipped with a shaker to remove the accumulated dust particles. The dust filters shaker is operated by the filter shaker switch.

Shake the dust filters before dumping the hopper and at the end of every work shift. Avoid shaking the filters while the hopper is in a rolled out position. Check and clean the dust filters every 50 hours of operation. Extremely dusty conditions may require more frequent cleaning of dust filters. Replace damaged dust filters.

REMOVING OR REPLACING THE HOPPER DUST FILTER

NOTE: Clean the filter more often if used in extremely dusty conditions.

1. Shake the hopper dust filter.
2. Stop the engine and set the machine parking brake.

FOR SAFETY: Before leaving or servicing machine, stop on level surface, set parking brake, turn off machine, and remove key.

3. Open the hopper cover.
4. Disconnect the shaker motor wire connectors.
5. Remove the four retaining screws from the filter shaker frame.

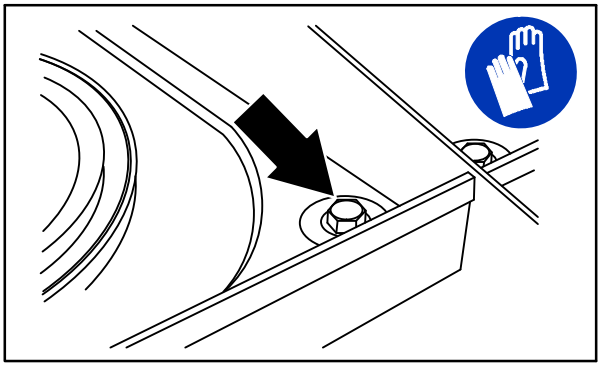

08591

6. Pull the filter shaker frame out of the hopper.
7. Carefully turn over the shaker frame and element.
8. Loosen the four filter retaining screws from the shaker frame.

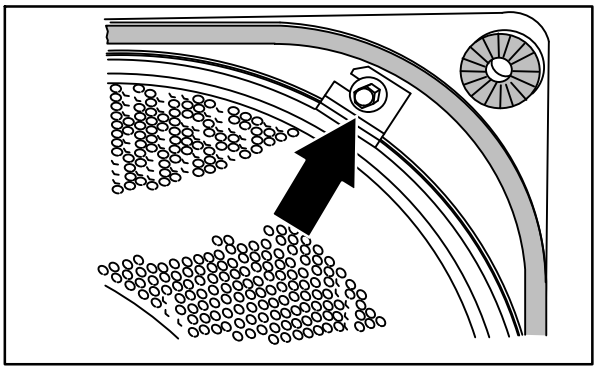

08592

9. Remove the retainer ring from the shaker frame. Remove the filter.
10. Make sure the prescreen wrap is tightly wrapped around and securely fastened on the new filter element. Put the new filter on the filter shaker frame.
11. Place the retainer ring over the filter. Make sure the retaining ring fits inside the lip of the filter element all the way around. Line up the slots on the retainer ring with the retaining screws holes.

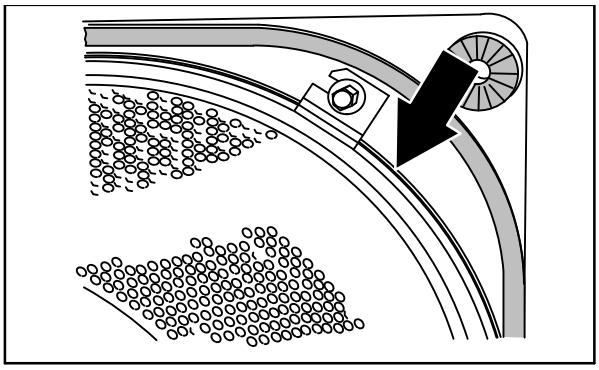

08593

12. Mount using the retaining screws.
13. Check the seal on the shaker frame for damage. Make sure the vibration isolators are mounted in all four corners of the filter shaker frame.
14. Put the filter and shaker frame in the hopper.
15. Install the four retaining screws and tighten.
16. Connect the shaker motor wire connectors.

CLEANING THE HOPPER DUST FILTER

To clean the dust filters, use one of the following methods:

- SHAKING – Press the filter shaker switch.
- AIR – Blow compressed air through the dust filter from the inside. This may be done with the dust filter in the machine, or for more efficient cleaning remove the dust filter from the machine and the prescreen wrap from the filter element.

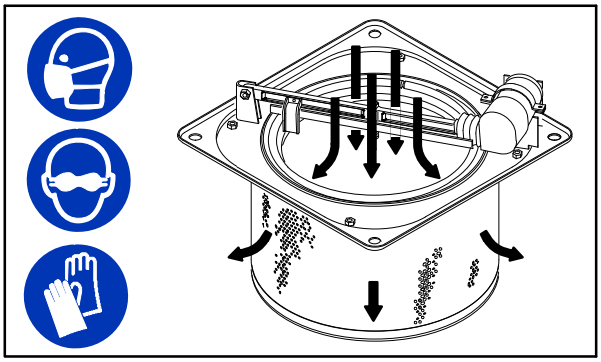

08594

- WATER – Remove the fabric prescreen wrap from the filter element. Wash the prescreen wrap in a water and mild detergent solution. Rinse the prescreen wrap until it is clean. Air dry the wet prescreen wrap; do not use compressed air. **NEVER** wash the filter element with water.

THERMO SENTRY

The Thermo Sentry senses the temperature of the air pulled up from the hopper. If there is a fire in the hopper, the Thermo Sentry stops the vacuum fan and cuts off the air flow. The Thermo Sentry is located on the vacuum fan housing.

Press the reset button to reset the Thermo Sentry.

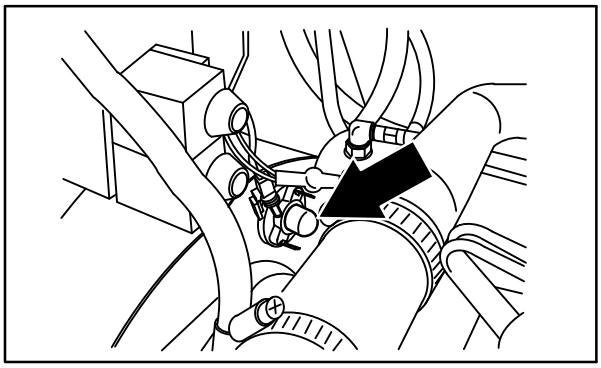

08928

MAIN BRUSH

Check the brush daily for wear or damage. Remove any string or wire tangled on the main brush, main brush drive hub, or main brush idler hub.

Check the main brush pattern and rotate the brush end-for-end after every 50 hours of operation, for maximum brush life and best sweeping performance. Refer to *REPLACING OR ROTATING THE MAIN BRUSH*.

Replace the brush when it no longer cleans effectively.

REPLACING OR ROTATING THE MAIN BRUSH

1. Raise the main brush.
2. Turn off the machine and set the machine parking brake.

FOR SAFETY: Before leaving or servicing machine, stop on level surface, set parking brake, turn off machine, and remove key.

3. Open the right side main brush access door.
4. Unlatch and remove the brush idler plate.

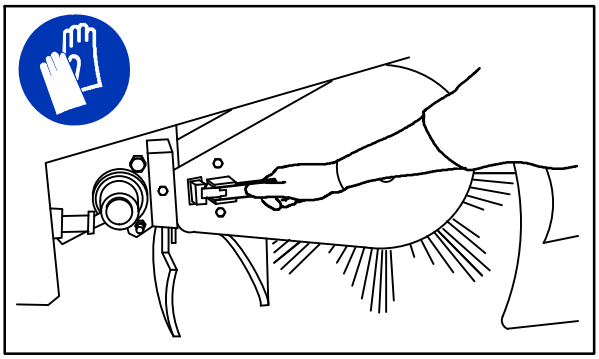

08487

5. Grasp the main brush; pull it off the brush drive plug and out of the main brush compartment.

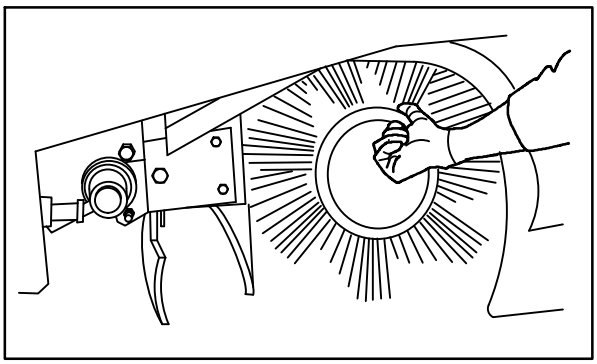

08488

6. Put the new or rotated end-for-end main brush on the floor next to the access door.
7. Slide the main brush onto the drive plug. Rotate the brush until it engages the drive plug, and push it all the way onto the plug.
8. Slide the main brush idler plate plug onto the main brush.
9. Latch the idler plate onto the machine frame.

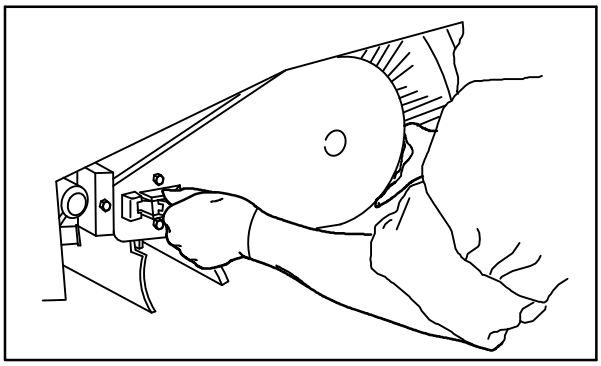

08489

10. Close the right side main brush access door.
11. Check and adjust the brush pattern if needed after rotating them. Refer to *CHECKING THE MAIN BRUSH PATTERN*.

CHECKING / ADJUSTING THE MAIN BRUSH PATTERN

1. Apply chalk, or a similar marking material, to a smooth and level section of the floor.

2. Raise the side brush and main brush and position the main brush over the chalked area.

NOTE: If chalk or other material is not available, allow the brush to spin on the floor for two minutes. A polish mark will remain on the floor.

3. Start the main brush.

4. Lower the main brush for 15 to 20 seconds while keeping a foot on the brakes to keep the machine from moving. This will lower the rotating main brush.

5. Raise the main brush.

6. Stop the main brush.

7. Drive the machine off the test area.

FOR SAFETY: Before leaving or servicing machine, stop on level surface, set parking brake, turn off machine, and remove key.

8. Observe the width of the brush pattern. The brush pattern should be 65 to 75 mm (2.5 to 3.5 in) across the entire length of the brush. Refer to *ADJUSTING THE MAIN BRUSH WIDTH.*

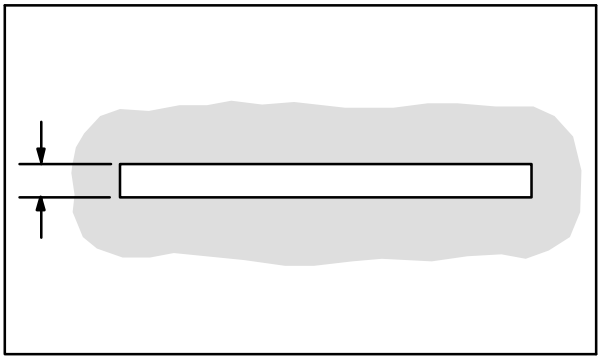

00582

9. Observe the brush taper. If the brush pattern is tapered, see *ADJUSTING THE MAIN BRUSH TAPER* section of this manual.

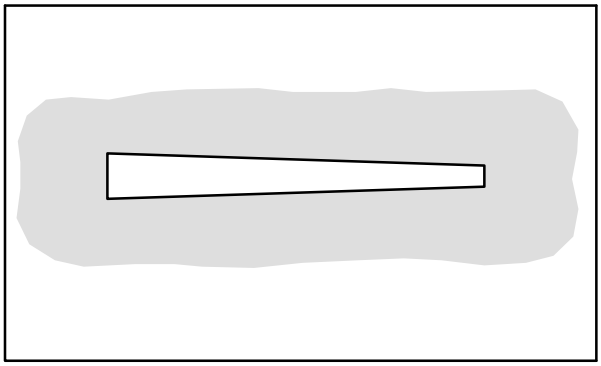

00601

ADJUSTING THE MAIN BRUSH WIDTH

FOR SAFETY: Before leaving or servicing machine, stop on level surface, set parking brake, turn off machine, and remove key.

1. Observe the width of the brush pattern.
2. To increase the width of the main brush pattern, turn the main brush down pressure knob counter-clockwise.

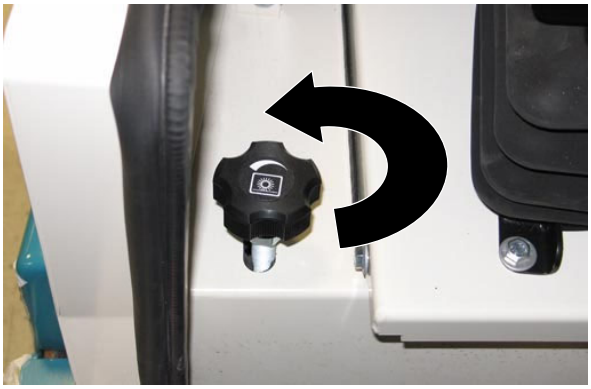

To decrease the width of the main brush pattern, turn the main brush down pressure knob clockwise.

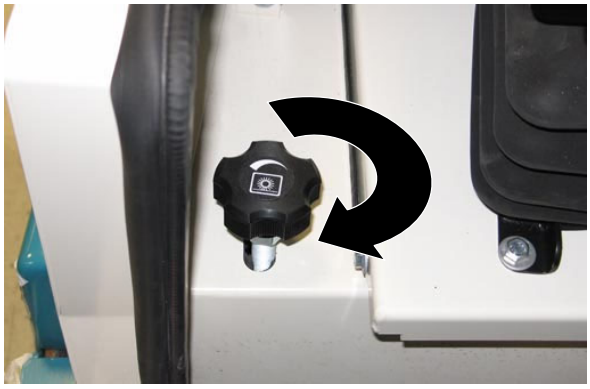

ADJUSTING THE MAIN BRUSH TAPER

FOR SAFETY: Before leaving or servicing machine, stop on level surface, set parking brake, turn off machine, and remove key.

1. Observe the brush taper.
2. Loosen the brush drive end plate mounting bolts.

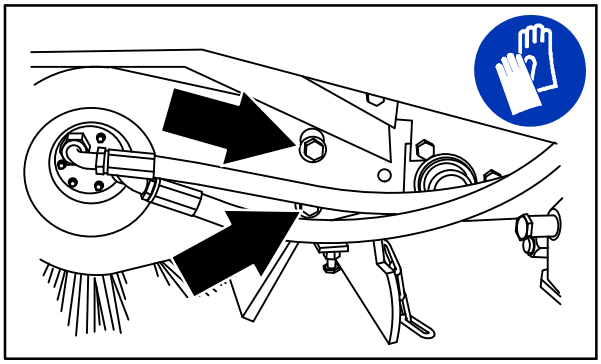

08450

3. Turn the taper adjustment nut counter-clockwise to increase the pattern width at the brush drive end, and clockwise to decrease the pattern width at the brush drive end. Tighten the drive end plate mounting bolts.

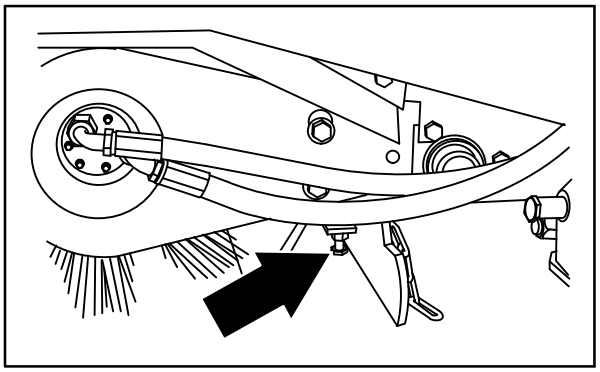

08490

4. Check the main brush pattern and readjust as necessary. Then adjust the width of the main brush pattern.

SIDE BRUSH(ES)

Check the brush(es) daily for wear or damage. Remove any string or wire found tangled in the brush(es) or drive hub(s).

Replace the brush(es) when it no longer cleans effectively.

REPLACING THE SIDE BRUSH

1. Empty the debris hopper.
2. Set the machine parking brake.
3. Raise the hopper.
4. Turn off the engine.

FOR SAFETY: Before leaving or servicing machine, stop on level surface, set parking brake, turn off machine, and remove key.

5. Remove the side brush retaining pin from the side brush drive shaft.

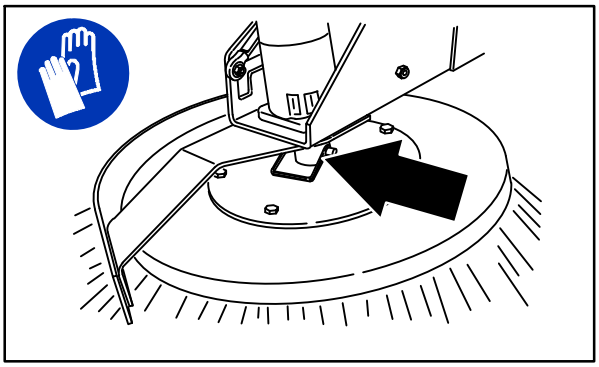

08466

6. Slide the side brush off the side brush drive shaft.

NOTE: Remove the drive hub and put it on the new brush if one is not installed.

7. Slide the new side brush onto the side brush drive shaft.
8. Insert the side brush retaining pin through the side brush hub and shaft and secure.
9. Disengage the hopper support bar and lower the hopper.
10. Adjust the side brush pattern with the side brush down pressure knob.

ADJUSTING THE SIDE BRUSH PATTERN

Check the side brush pattern daily. The side brush bristles should touch the floor in the patterns shown in the illustration.

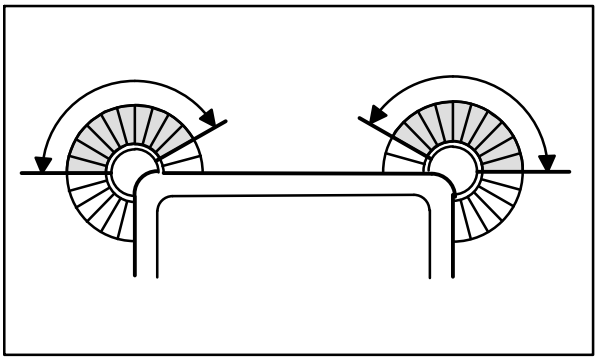

350327

Turn the knob counterclockwise to increase the brush pressure and clockwise to decrease the brush pressure.

SKIRTS AND SEALS

FOR SAFETY: Before leaving or servicing machine, stop on level surface, set parking brake, turn off machine, and remove key.

HOPPER LIP SKIRTS

The hopper lip skirts are located on the bottom rear of the hopper. The skirts float over debris and help deflect that debris into the hopper. The top skirt is segmented.

Check the hopper lip skirts for wear or damage daily.

Replace the hopper lip skirts when they no longer touch the floor.

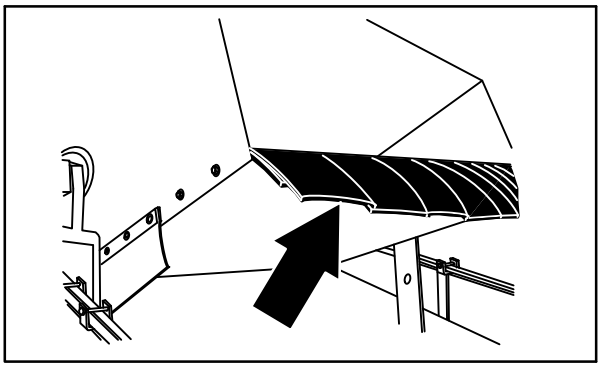

08491

HOPPER SIDE SKIRT

The hopper side skirt is located on the left side of the hopper.

Check the hopper side skirt for wear or damage and adjustment daily.

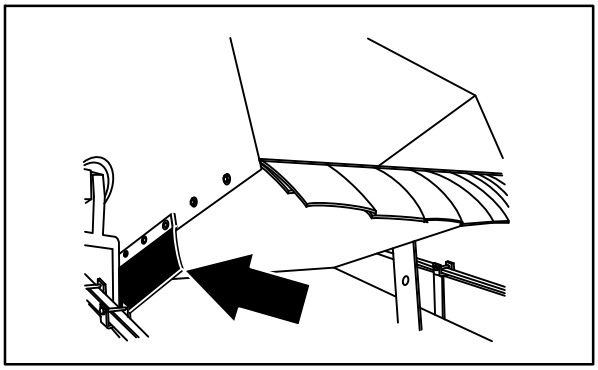

08492

BRUSH COMPARTMENT SKIRTS

The brush compartment skirts are located on the bottom of each of the two main brush doors and around the ends of the brush on the main frame. The inside brush door skirt should touch the floor, and the outside brush door skirt should clear the floor by 3 to 5 mm (0.12 to 0.25 in).

Check the skirts for wear or damage and adjustment daily.

NOTE: The brush door skirts have slotted holes to allow for a ground clearance adjustment. The door must be closed for proper adjustment.

NOTE: Tire pressure will affect skirt clearances.

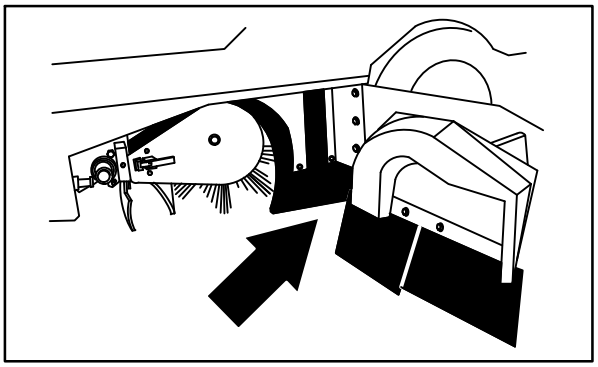

08493

REAR SKIRTS

The two rear skirts are located on the bottom rear of the main brush compartment. The vertical skirt should clear the floor up to 20 mm (0.75 in) in dusty conditions, and touch the floor otherwise. The recirculation skirt is self-adjusting.

Check the skirts for wear or damage and adjustment daily.

NOTE: Tire pressure will affect skirt clearances.

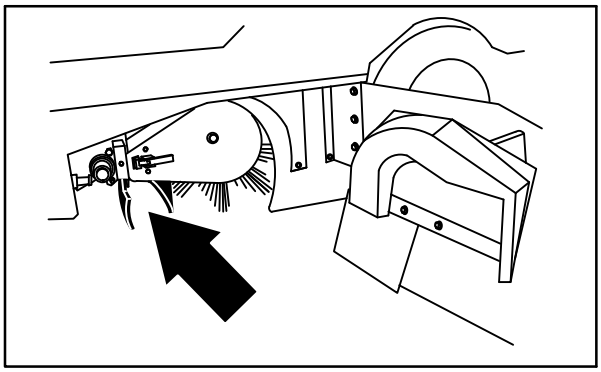

08494

BRUSH DOOR SEALS

The brush door seals are located on both main brush doors and on corresponding portions of the main frame.

Check the seals for wear or damage after every 100 hours of operation.

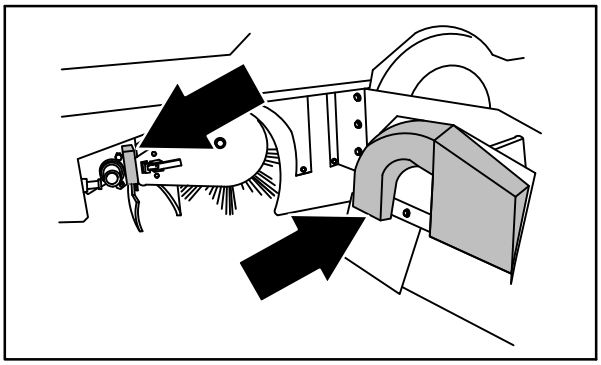

08495

HOPPER SEALS

The hopper seals are located on the top and side portions of the machine frame that contact the hopper.

Check the seals for wear or damage after every 100 hours of operation.

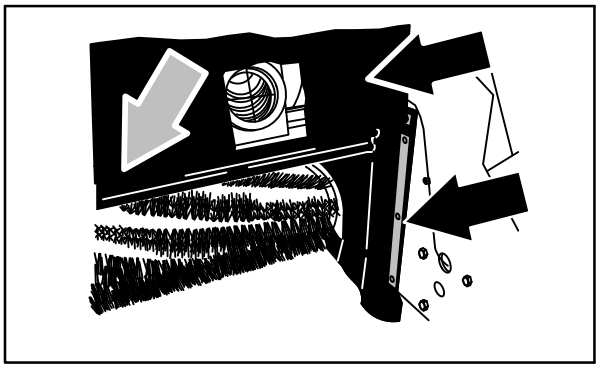

08496

HOPPER DUST SEAL

The hopper dust seal is located inside the hopper. It seals the hopper filter compartment.

Check the seal for wear or damage after every 100 hours of operation.

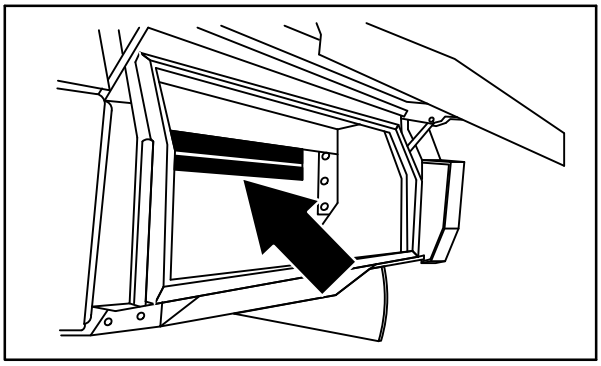

08498

HOPPER DOOR SEALS

The hopper door seals are located on the hopper door. They seal the hopper when the hopper door is closed.

Check the seals for wear or damage after every 100 hours of operation.

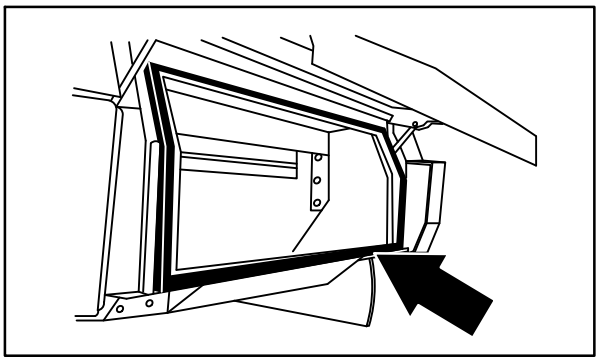

08497

HOPPER VACUUM FAN SEAL

The hopper vacuum fan seal is mounted on the the vacuum fan inlet bracket.

Check the seal for wear or damage after every 100 hours of operation.

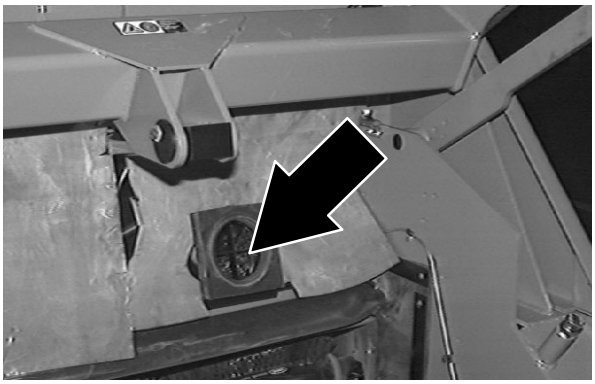

HOPPER COVER SEAL

The hopper cover seals are located on the inside of the hopper cover. They seal the hopper filter compartment.

Check the seal for wear or damage after every 100 hours of operation.

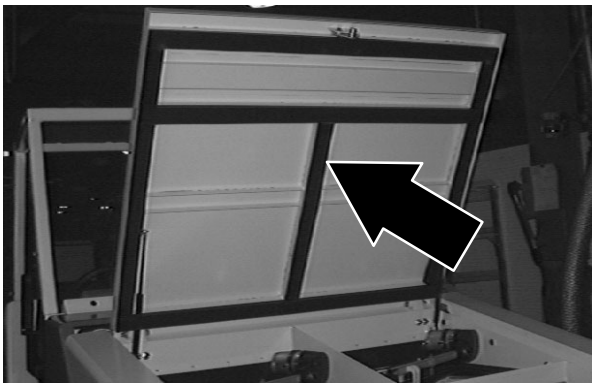

BRAKES AND TIRES

SERVICE BRAKES

FOR SAFETY: Before leaving or servicing machine, stop on level surface, set parking brake, turn off machine, and remove key.

The hydraulic service brakes are located on the front wheels.

The master brake cylinder is located on the fire wall.

Check the master brake cylinder fluid level after every 400 hours of operation.

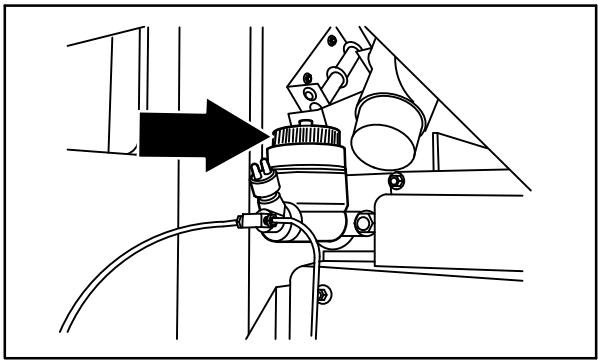

08501

PARKING BRAKE

FOR SAFETY: Before leaving or servicing machine, stop on level surface, set parking brake, turn off machine, and remove key.

Adjust the parking brake whenever it becomes very easy to set, when the machine rolls after setting it, and after every 200 hours of operation.

TIRES

The standard machine tires are pneumatic.

Check the tire pressure after every 100 hours of operation. The proper tire air pressure is 690 – 758 kPa (100 – 110 psi).

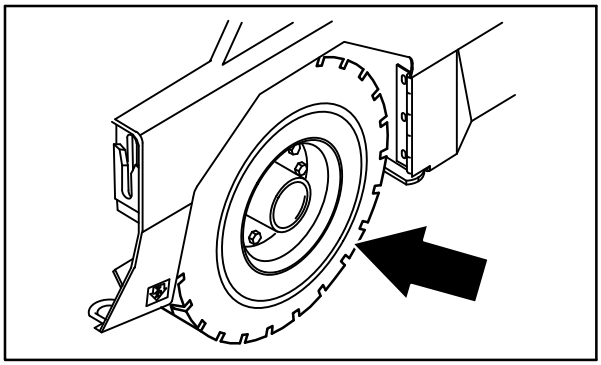

08575

FRONT / REAR WHEELS

Torque the front wheel nuts twice in the pattern shown to 169 to 183 Nm (125 to 135 ft lb) after the first 50-hours of operation, and after every 800 hours of operation.

Torque the rear wheel nuts twice in the pattern shown to 122 to 155 Nm (90 to 110 ft lb) after the first 50 hours of operation, and after every 800 hours of operation.

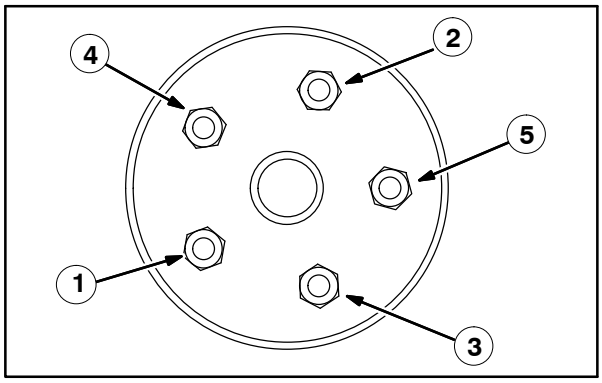

PROPELLING MOTOR

Torque the shaft nut to 270 Nm (200 ft lb) after the first 50 hours of operation and after every 800 hours thereafter.

AIR CONDITIONER FILTER (OPTION)

Clean the air conditioner filter after every 100 hours of operation. Replace the air conditioner filter if it is damaged.

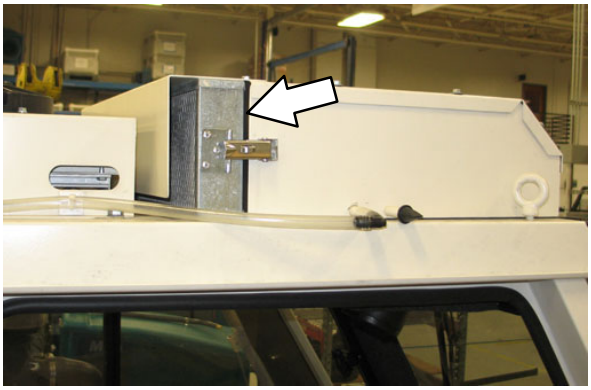

PUSHING, TOWING, AND TRANSPORTING THE MACHINE

PUSHING OR TOWING THE MACHINE

If the machine becomes disabled, it can be pushed from the front or rear, but only towed from the rear.

The propelling pump has a bypass valve to prevent damage to the hydraulic system when the machine is being pushed or towed. This valve allows a disabled machine to be moved for a *very short distance* and at a speed to not exceed 1.6 kp/h (1 mph). The machine is NOT intended to be pushed or towed a long distance or at a high speed.

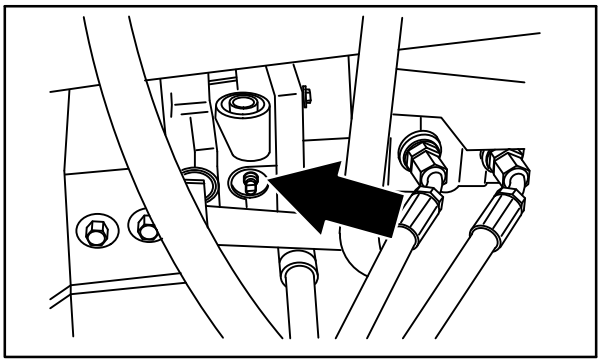

08576

ATTENTION! Do not push or tow machine for a long distance and without using the bypass valve, or the machine hydraulic system may be damaged.

Turn the bypass valve 90° from the normal position before pushing or towing the machine. **The illustration shows the bypass valve in the pushing or towing position.**

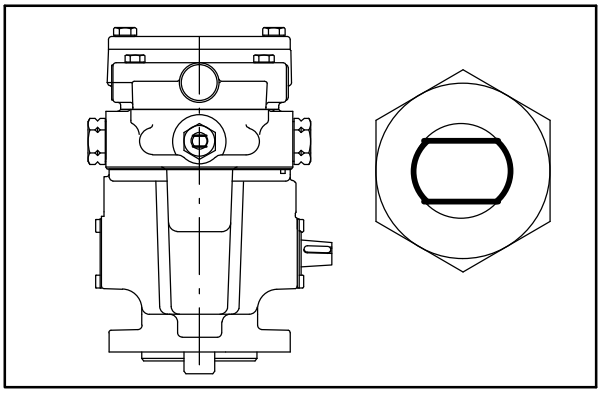

Return the bypass valve to the normal position when through pushing or towing the machine.

TRANSPORTING THE MACHINE

1. Position the machine at the loading edge of the truck or trailer.

FOR SAFETY: When loading/unloading machine onto/off truck or trailer, empty debris hopper before loading machine.

2. If the loading surface is not horizontal or is higher than 380 mm (15 in) from the ground, use a winch to load machine.

   If the loading surface is horizontal AND is 380 mm (15 in) or less from the ground, the machine may be driven onto the truck or trailer.

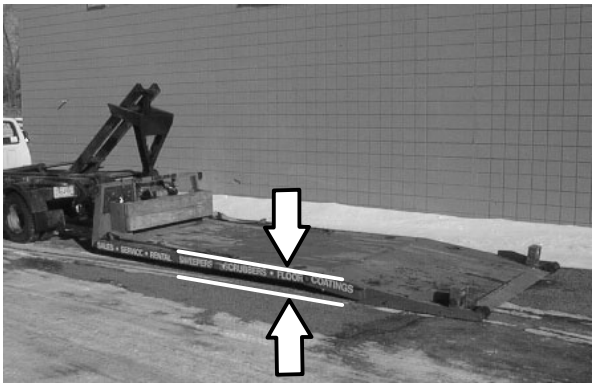

FOR SAFETY: When loading machine onto truck or trailer, use winch. Do not drive the machine onto the truck or trailer unless the loading surface is horizontal AND is 380 mm (15 in) or less from the ground.

3. To winch the machine onto the truck or trailer, attach the winching chains to the rear tie down locations.

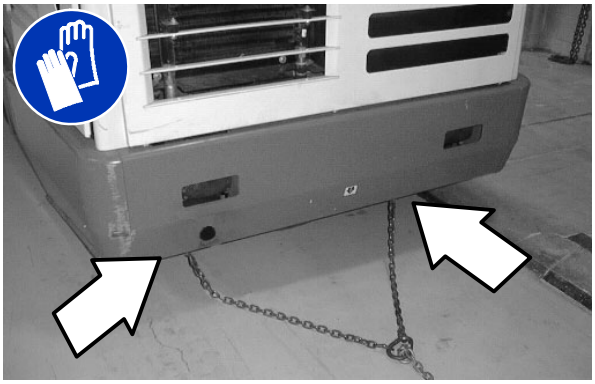

   The rear tie-down locations are through the U–bolt section of the main frame under the side bumpers toward the rear.

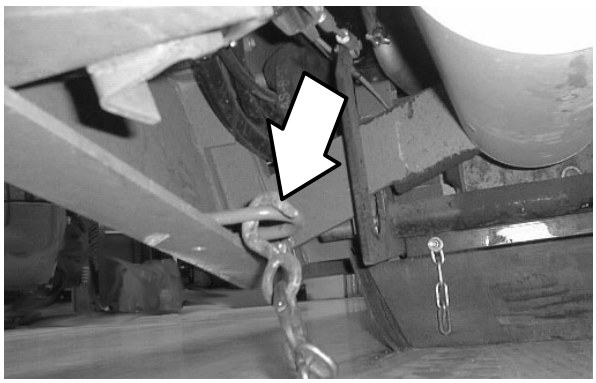

4. Turn the bypass valve 90° from the normal position before winching the machine onto the truck or trailer. See *PUSHING OR TOWING THE MACHINE* section of this manual. Make sure the machine is centered.

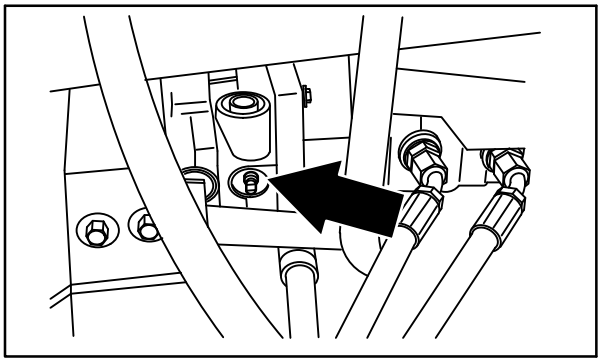

08576

5. Position the machine onto the truck or trailer as far as possible. If the machine starts to veer off the center line of the truck or trailer, stop and turn the steering wheel to center the machine.

6. Set the parking brake and block the machine tires. Tie down the machine to the truck or trailer before transporting.

   The two front tie−down locations are through the U−bolt section of the main frame in front of the wheels.

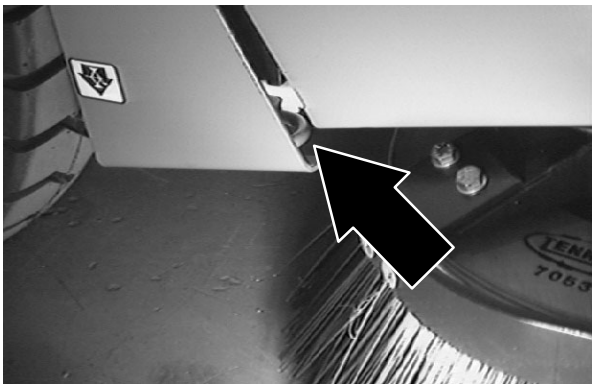

   The two rear tie−down locations are through the U−bolt section of the main frame under the side bumpers toward the rear.

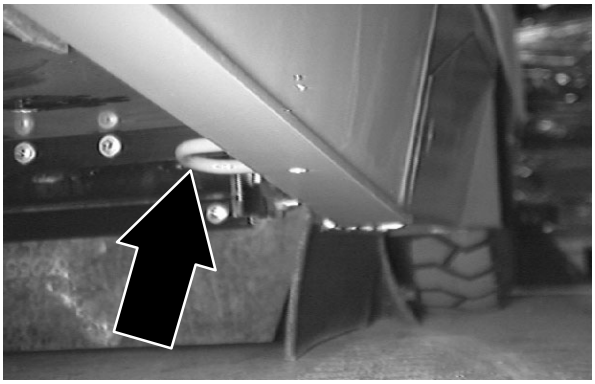

7. If the loading surface is not horizontal or is higher than 380 mm (15 in) from the ground, use a winch to unload machine.

   If the loading surface is horizontal AND is 380 mm (15 in) or less from the ground, the machine may be driven off the truck or trailer.

FOR SAFETY: When unloading machine off truck or trailer, use winch. Do not drive the machine off the truck or trailer unless the loading surface is horizontal AND is 380 mm (15 in) or less from the ground.

8. Return the bypass valve to the normal position when through loading the machine**.** Refer to *PUSHING OR TOWING THE MACHINE* section of this manual.

MACHINE JACKING

Empty the hopper before jacking up the machine. Jack up the machine at the designated locations. Use a hoist or jack capable of supporting the weight of the machine. Use jack stands to support the machine.

FOR SAFETY: Before leaving or servicing machine, stop on level surface, set parking brake, turn off machine, and remove key.

FOR SAFETY: When servicing machine, block machine tires before jacking machine up. Use a hoist or jack that will support the weight of the machine. Jack machine up at designated locations only. Support machine with jack stands.

The front jacking locations are the flat bottom edge of the machine frame next to the front tires.

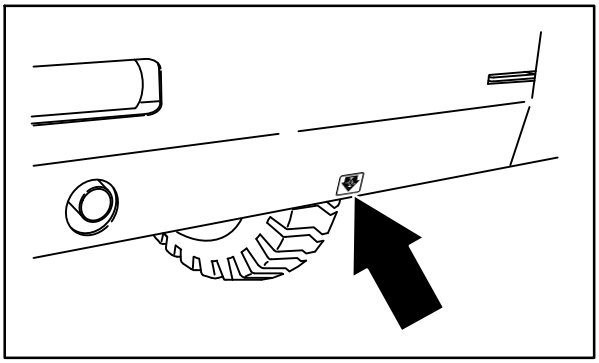

08586

The rear jacking location is the middle of the rear bumper.

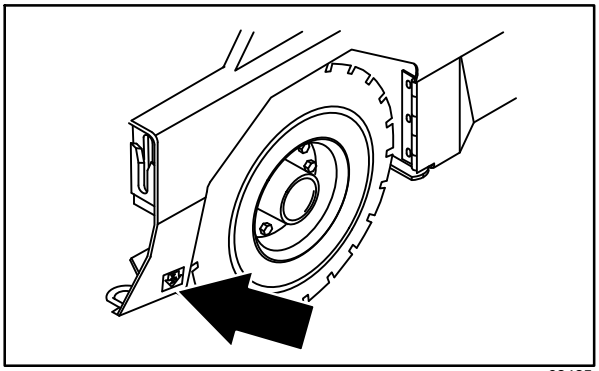

08485

STORAGE INFORMATION

The following steps should be taken prior to storing the machine for extended periods.

1. Park the machine in a cool, dry area. Do not expose the machine to rain or snow. Store indoors.

2. Remove the battery, or charge battery every three months.

Before storing the machine for an extended period of time, the machine needs to be prepped to lessen the chance of rust, sludge, and other undesirable deposits from forming. Contact TENNANT service personnel.

SPECIFICATIONS

GENERAL MACHINE DIMENSIONS/CAPACITIES

Item	Dimension/capacity
Length	3050 mm (120 in)
Width	1780 mm (70 in)
Height (top of air cleaner)	1875 mm (73.8 in)
Height with overhead guard	2095 mm (82.5 in)
Height with overhead guard and hazard light	2310 mm (91 in)
Height with cab	2095 mm (82.5 in)
Height with cab & air conditioner	2257 mm (89 in)
Height with cab and hazard light	2310 mm (91 in)
Track	1560 mm (61.5 in)
Wheelbase	1420 mm (56 in)
Main brush diameter	405 mm (16 in)
Main brush length	1270 mm (50 in)
Power Throw brush diameter	205 mm (8 in)
Power Throw brush length	1170 mm (46 in)
Side brush diameter	65 mm (26 in)
Sweeping path width	1270 mm (50 in)
Sweeping path width with side brush	1675 mm (66 in)
Sweeping path width with dual side brushes	2100 mm (82 in)
Main brush pattern width	50 to 65 mm (2.0 to 2.5 in)
Hopper weight capacity	907.2 kg (2000 lb)
Hopper volume capacity	849.5 L (30 cu ft)
Dust filter area	17.7 m^2 (190 sq ft)
GVWR	4055 kg (8940 lb)
Ceiling height minimum dumping clearance	3355 mm (11 ft)
Protection Grade	IPX3

Values determined as per IEC 60335–2–72	Measure
Sound pressure level L_{pA}	83 dB(A)
Sound uncertainty K_{pA}	3 dB(A)
Sound power level L_{WA} + Uncertainty K_{WA}	103 dB(A)
Vibration – Hand–arm	<2.5 m/s^2
Vibration – Whole body	<0.5 m/s^2

GENERAL MACHINE PERFORMANCE

Item	Measure
Maximum forward speed	16 kmh (10 mph)
Maximum reverse speed	7.3 kmh (4.5 mph)
Minimum aisle turn width, left	3450 mm (135 in)
Minimum aisle turn width, right	4675 mm (184 in)
Maximum rated climb and descent angle (Sweeping)	15%
Maximum rated climb and descent angle with empty hopper	27%
Maximum ambient temperature for machine operation	43° C (110° F)
Minimum ambient temperature for machine operation	0° C (32° F)

POWER TYPE

Engine	Type	Ignition	Cycle	Aspiration	Cylinders	Bore	Stroke
Kubota 4F V2403/Stage V	Piston	Diesel	4	Turbo	4	87 mm (3.43 in)	102.4 mm (4.04 in)
	Displacement		Tennant governed power			Gross intermittent power per SAE J1995	
	2.434 L. (148 cu in)		43.2 kw (57.9 hp) @ 2400 rpm			43.2 kw (57.9 hp) @ 2400 rpm	
	Fuel		Cooling system			Electrical system	
	Ultra Low Sulfur Diesel Fuel tank: 45.5 L (12 gal)		Water/ethylene glycol antifreeze			12 V nominal	
			Total: 13.6 L (3.6 gal)			90 A alternator (std)	
			Radiator: 6.2 L (1.6 gal)				
	Idle speed, no load		Intermediate speed, under load			Governed speed, under load	
	1350 ± 50 rpm		2000 ± 50 rpm			2400 ± 50 rpm	
	Engine lubricating oil with filter						
	6.6 L (7.0 qt) with remote filter, API diesel classification CJ–4 or better						

STEERING

Type	Power source	Emergency steering
Rear wheel, hydraulic cylinder and rotary valve controlled	Hydraulic accessory pump	Manual

HYDRAULIC SYSTEM

System	Capacity	Fluid Type
Hydraulic reservoir	47.3 L (12.5 gal)	ISO Grade 100 – above 7° C (45° F) ISO Grade 32 – below 7° C (45° F)
Hydraulic total	56.8 L (15 gal)	

BRAKING SYSTEM

Type	Operation
Service brakes	Hydraulic drum brakes (2), one per front wheel, foot brake master cylinder activated
Parking brake	Utilize service brakes, cable actuated

TIRES

Location	Type	Size	Pressure
Front (2)	Pneumatic	6.5 x 23.5 in	690 – 758 kPa (100 – 110 psi)
Rear (1)	Pneumatic	6.5 x 23.5 in	690 – 758 kPa (100 – 110 psi)

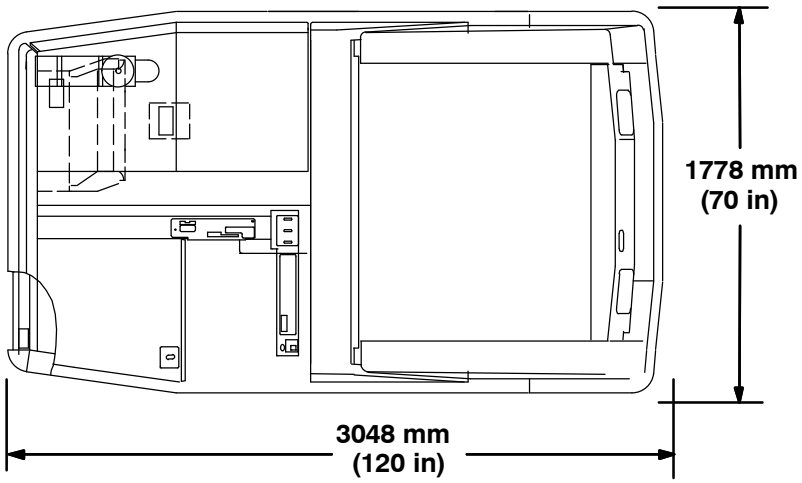

TOP VIEW

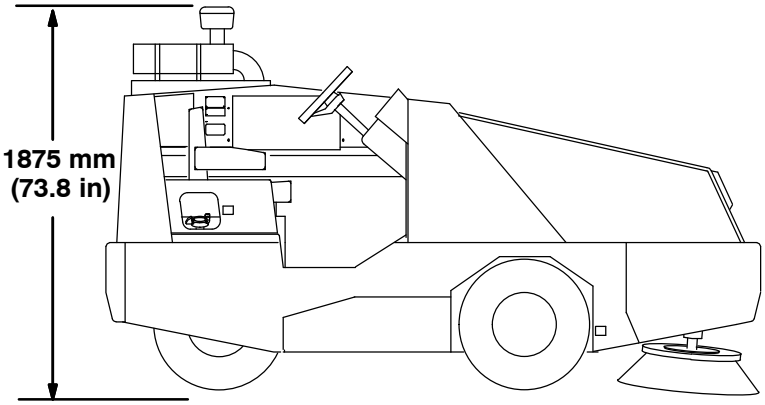

SIDE VIEW

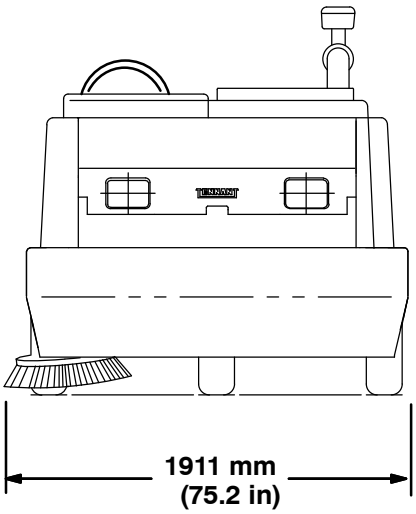

FRONT VIEW

08774

MACHINE DIMENSIONS

A

Adjusting engine speed (RPM), 17

Adjusting the Main Brush Taper, 63

Adjusting the Main Brush Width, 63

Air Conditioner Filter
  Clean, 69
  Replace, 69

Air conditioning system (option)
  Belt, 45
  Switch, 20

Air control vents (option), 20

Air filter indicator, 50
  Reset, 50

Air intake hoses. Engine, 49

Aisle turn, 75

B

Battery, 58
  Charging system, Light, 13

Belts
  Air Conditioning (option), 45
  Engine belt, 45

Boost sensor pressure hose, 49

Brake pedal, 11

Brake, parking, 68

Brakes
  Service, 68
  System specifications, 76

Brakes and Tires, 68
  Rear Wheel, 68
  Tires, 68

Brush door seals, 66

Brush door skirts, 65

Brush Information, 21

Brushes
  Adjust side brush pattern, 64
  Checking / adjusting the main brush pattern, 62
  Checking side brush pattern, 64
  Door seals, 66
  Main brush adjustment knob, 12
  Rear skirts, 65
  Side brush adjustment knob, 12

Bypass valve, 70

C

Capacities, 74

Charging system light, 13

Check engine light, 14

Circuit breakers, 58

Clean / Replace Air Conditioner Filter, 69

Clogged dust filter light, 14

Clogged hydraulic filter light, 15

Control panel
  Charging System light, 13
  Check engine light, 14
  Clogged dust filter light, 14
  Clogged hydraulic filter light, 15
  Engine oil pressure, 13
  Engine water temperature light, 13
  Fuel level gauge, 15
  Hopper door light (option), 14
  Hopper temperature light, 13
  Main brush shut down light, 14
  Operating/hazard lights switch, 15
  Parking brake light, 17

Controls
  Air conditioning switch (option), 20
  Air control vents (option), 20
  Charging system light, 13
  Check engine light, 14
  Clogged dust filter light, 14
  Clogged hydraulic filter light, 15
  Dome light switch, 19
  Engine Display Module, 17
    Adjusting the engine speed (RPM), 17
  Engine oil pressure light, 13
  Engine water temperature light, 13
  Fan speed switch (option), 19
  Filter shaker switch, 16
  Fuel level gauge, 15
  Hazard light switch (option), 16
  Heater knob, 19
  Hopper temperature light, 13
  Horn button, 12
  Main brush adjustment knob, 12
  Operating/hazard lights switch, 15
  Parking brake light, 17
  Side brush adjustment knob, 12
  Steering wheel tilt handle, 12
  Vacuum fan switch, 16
  Windshield wiper switch (option), 19

Controls and Instruments, 8

Cooling System, 44
  Check the coolant level, 44
  Flush the radiator and the cooling system, 45

D

Debris hopper, 59
Dimensions, 74
Directional pedal, 11
Disengaging hopper support bar, 31
Dome light switch, 19
Doors
  Brush, Seals, 66
  Hopper, Seals, 66
DPF (diesel particulate filter), 25, 48, 51
DPF (Diesel Particulate Filter) Alerts, 52
DPF (Diesel Particulate Filter) Regeneration, 51
DPF (Diesel Particulate Filter) Status Icons, 54
Draining the water / fuel separator, 46
Dust filter, 60
  Cleaning, 60

E

EDM (Engine Display Module), 17, 23, 51, 55, 57
EGR (exhaust gas recirculation) cooler, 48
Electrical system, circuit breakers, 58
Emptying the hopper, 28
Engaging hopper support bar, 30
Engine, 44
  Air filter assembly, 50
  Air filter indicator, 50
  Air intake hoses, 49
  Belt, 45
  Boost sensor pressure hose, 49
  Coolant temperature, Light, 13
  Cooling System, 44
  DPF (diesel particulate filter), 48
  DPF (Diesel Particulate Filter) Alerts, 52
  DPF (Diesel Particulate Filter) Regeneration, 51
  DPF (Diesel Particulate Filter) Status Icons, 54
  EGR (exhaust gas recirculation) cooler, 48
  Exhaust manifold, 48
  Fuel filter, 47
  Fuel Lines, 46
  Initiating a operator regeneration, 55
  Initiating a sweeping regeneration, 54
  Oil pressure, Light, 13
  Oil separator element, 47
  Oil separator hose, 47
  PCV (positive crankcase ventilation) valve, 47
  Priming the fuel system, 46
  Specifications, 75
  Turbo charger lubricant hose, 49
  Valve clearance, 49
  Water / fuel separator, 46
Engine air filter, Cleaning, 50
Engine air filter assembly, 50
Engine belt, 45
Engine Oil, 44
Engine oil pressure light, 13
Engine water temperature light, 13
Exhaust manifold, 48

F

Fan speed switch (option), 19
Filter shaker switch, 16
Filters
  Hopper dust, 60
  Hopper filter cleaning, 60
  Regenerative Filter System (RFS) (option), 35
  Replacing the hopper dust filter, 59
Front Wheel Bearings, 41
Fuel filter, 47
Fuel level gauge, 15
Fuel Lines, 46

G

Gauges, Fuel level, 15
Grease fittings, Rear Wheel Support Bearing, 41

H

Hazard light switch, 16
Heater knob, 19
Hopper, 59
  Clogged dust filter, Light, 14
  Cover seal, 67
  Disengaging hopper support bar, 31
  Door light (option), 14
  Door seals, 66
  Dust filter, 60
  Dust seal, 66
  Emptying the hopper, 28
  Engaging hopper support bar, 30
  Filter cleaning, 60
  Filter shaker, 16
  Lip skirts, 65
  Seals, 66
  Side skirt, 65
  Temperature, Light, 13
  Thermo Sentry, 13, 60
  Vacuum fan seal, 67

Hopper door seals, 66
Hopper seals, 66
Hopper side skirt, 65
Hopper temperature light, 13
Horn button, 12
Hour Meter, 15
How the Machine Works, 21
Hydraulic Cooler, 45
  Clean the fins, 45
Hydraulic fluid, 43
Hydraulic fluid reservoir, 42
Hydraulic Hoses, 43
Hydraulics, 42
  Check the hydraulic hoses, 43
  Clogged hydraulic filter light, 15
  Fluid, 43 – 45
  Hydraulic Hoses, 43
  Reservoir, 42
  System specifications, 75

I

Icons, DPF (Diesel Particulate Filter) Status, 54
Indicators, Hour Meter, 15
Initiating a parked regeneration, 55
Initiating a sweeping regeneration, 54

J

Jack points, 73
Jacking up the machine, 73

K

Knobs
  Heater, 19
  Main brush adjustment, 12
  Right side brush adjustment, 12

L

Levers, Steering wheel tilt handle, 12
Lights
  Charging system, 13
  Check engine, 14
  Clogged Dust filter, 14
  Clogged hydraulic filter light, 15
  Engine oil pressure, 13
  Engine water temperature, 13
  Hopper door (option), 14
  Hopper temperature, 13
  Main brush shut down, 14
  Operating/hazard lights switch, 15
  Parking brake, 17
Lubrication, 41
  Engine Oil, 44
  Front Wheel Bearings, 41
  main brush adjustment, 41
  Rear Wheel Support Bearing, 41
  Side brush pivot pins, 41

M

Machine components, 7
Machine dimensions, 76
Machine jacking, 73
Machine Operation, Pre−Operation Checklist, 22
Machine tie down location, 72
Machine Troubleshooting, 36
Main brush
  Adjustment, 12
  Checking / adjusting the brush pattern, 62
  Door seals, 66
  Door skirts, 65
  Rear skirts, 65
  Shut down light, 14
Main brush adjustment, lubrication, 41
Main brush adjustment knob, 12
Main Brushes, 61
  Adjusting the Taper, 63
  Adjusting the Width, 63
  Replacing or Rotating the Main Brushes, 61
Main Brushes, Adjusting the Taper, 63
Main Brushes, Adjusting the Width, 63
Main Brushes, Replacing or Rotating, 61
Maintenance, 37
Maintenance Chart, 37

O

Oil separator element, 47

Oil separator hose, 47

Operating/hazard lights switch, 15

Operation, 7

Operation of controls, 11

Operator seat, 18

Options, 32
- Air conditioning switch, 20
- Air control vents, 20
- Clogged dust filter light, 14
- Dome light switch, 19
- Fan speed switch, 19
- Hazard light switch, 16
- Heater knob, 19
- Hopper door light, 14
- Operating/hazard lights switch, 15
- Regenerative Filter System (RFS), 35
- Vacuum Wand, 32
- Windshield wiper switch, 19

P

Parking brake, adjustment, 68

Parking brake light, 17

Parking brake pedal, 11

PCV (positive crankcase ventilation) valve, 47

Pedals
- Brake pedal, 11
- Directional pedal, 11
- Parking brake pedal, 11

Pre−Operation Checklist, 22

Priming the fuel system, 46

Propelling Motor, 69
- Torque shaft nut, 69

Pushing or Towing the Machine, 70
- Bypass valve, 70

Pushing the Machine, 70

Pushing, Towing, and Transporting the Machine, 70
- Pushing or Towing the Machine, 70
- Transporting the Machine, 71

R

Radiator, 44, 45
- Check hoses and clamps, 44
- Clean core exterior, 45
- Replace hoses and clamps, 45

Rear skirts, 65

Rear tie down location, 72

Rear Wheel Support Bearing, 41

Rear Wheel, Torque, 68

Regenerative Filter System (RFS) (option), 35

Replacing or Rotating the Main Brushes, 61

Replacing the hopper dust filter, 59

Replacing the Side Brush, 64

Reset air filter indicator, 50

S

Safety
- Disengaging hopper support bar, 31
- Engaging hopper support bar, 30
- Labels, 5
- Precautions, 3

Seals, 65
- Brush doors, 66
- Hopper, 66
- Hopper cover, 67
- Hopper door, 66
- Hopper vacuum fan, 67
- Hopper, dust, 66

Seat belts, 18

Seat support, 18

Seat, operator, adjustment, 18

Side brush, 64
- Adjust the pattern, 64
- Adjustment, 12
- Replacing the Side Brush, 64

Side brush down pressure knob, 12

Side brush pivot pins, lubrication, 41

Side Brush, Adjusting, 64

Side Brush, Replacing, 64

Side brush(es), Checking brush pattern, 64

Skirts, 65
- Brush door, 65
- Hopper Lip, 65
- Hopper side, 65
- Rear, 65

Specifications
Braking system, 76
Climb & descent angle, 75
Dumping clearance height, 74
Hydraulic system, 75
Machine capacities, 74
Machine dimensions, 74
Machine performance, 75
Power type, 75
Steering, 75
Tires, 76

Starting the machine, 23

Steering, specifications, 75

Steering wheel tilt handle, 12

Stop sweeping, 27

Storage Information, 73
Storing the Machine, 73

Support, Seat, 18

Sweeping, 26

Switches
Air conditioning (option), 20
Dome light (options), 19
Fan speed (option), 19
Filter shaker, 16
Hazard light (option), 16
Operating/hazard lights, 15
Vacuum fan, 16
Windshield wiper (option), 19

Symbol definitions, 9

T

Thermo Sentry, 13, 60

Tie down location, 72
Rear, 72

Tires, 68
Pressure, 68
Specifications, 76

Towing the Machine, 70

Transporting the Machine, 71

Travel speed, 75

Turbo charger lubricant hose, 49

Turning off the machine, 24

V

Vacuum fan switch, 16

Vacuum Wand, 32

Valve clearance, 49

Valves, 49
Intake and exhaust, 49

Vents, air control, 20

W

Water / fuel separator, 46

Water / fuel seperator, Draining the water / fuel separator, 46

Wheels, 68

While operating the machine, 25

Windshield wiper switch, 19