PARTS LIST

RALLY 500H

SAVE THESE INSTRUCTIONS

OVERVIEW 120 VOLT

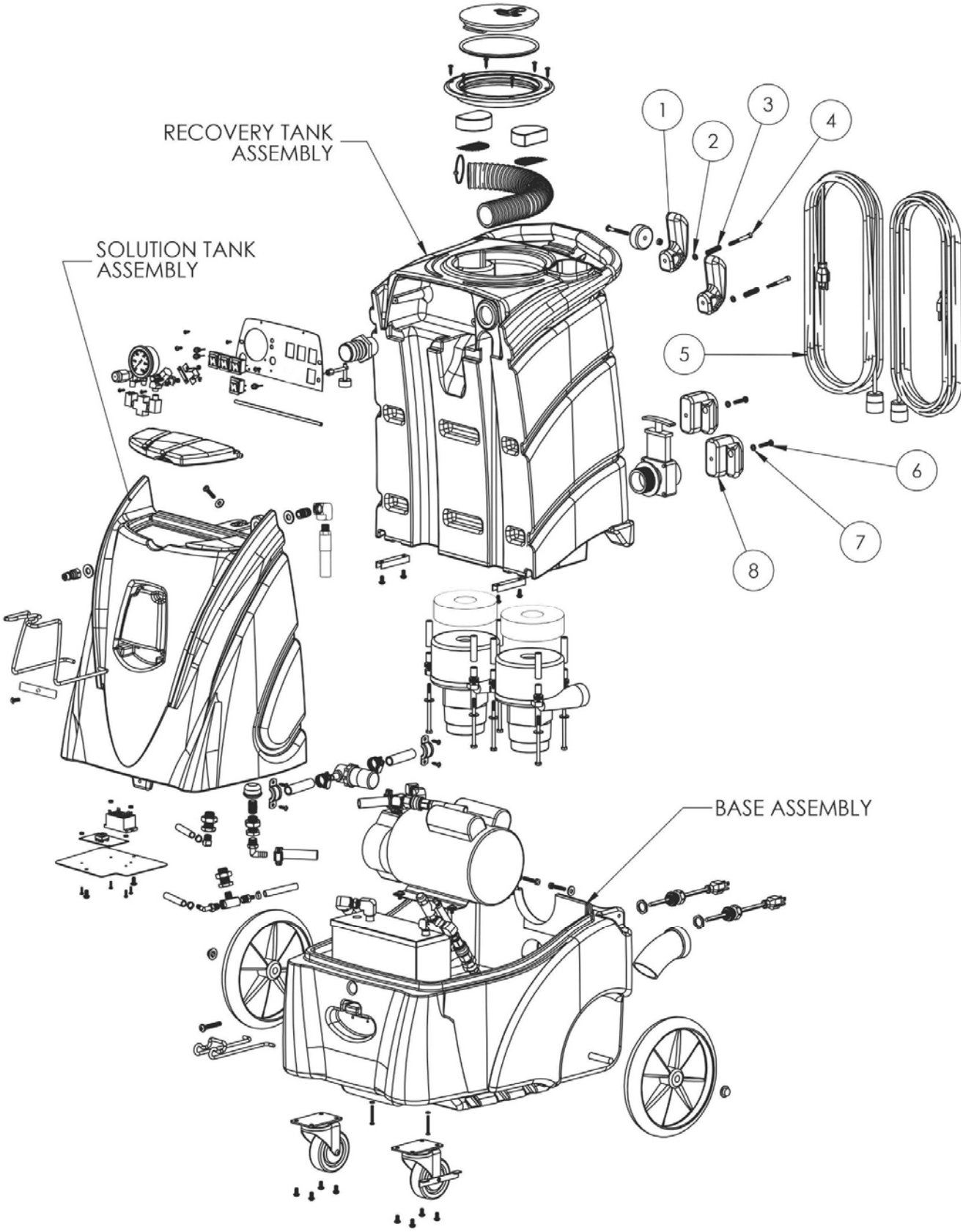

OVERVIEW 120 VOLT

ITEM	PART NO.	DESCRIPTION	QTY
1	4099011	CORD WRAP, (SET FOR ONE CORD, FASTENERS NOT INCLUDED)	2
2	9120935	1/4 WASHER, .268 ID x .5 OD x .060 THK (PK-10)	2
3	4098551	SPRING, CORD WRAP, UPPER	2
4	9121150	1/4-20 x 2-1/4 ROUND HEAD PHILIPS MACHINE SCREW (PK-2)	2
5	4099341	CORD, EXTENTION, 12-3 SJTW, 25FEET LONG	2
6	9121141	1/4-20 X 1 ROUND HEAD PHILIPS MACHINE SCREW (PK-5)	2
7	9120935	1/4 WASHER, .268 ID x .5 OD x .060 THK (PK-10)	2
8	4099011	CORD WRAP, (SET FOR ONE CORD, FASTENERS NOT INCLUDED)	2
N/S	4093351	1.5" X 25' VACUUM HOSE	1
N/S	4093331	25' HIGH PRESSURE LINE COMP.	1

ALWAYS USE GENUINE NSS REPLACEMENT PARTS

BASE ASSEMBLY 120 VOLT

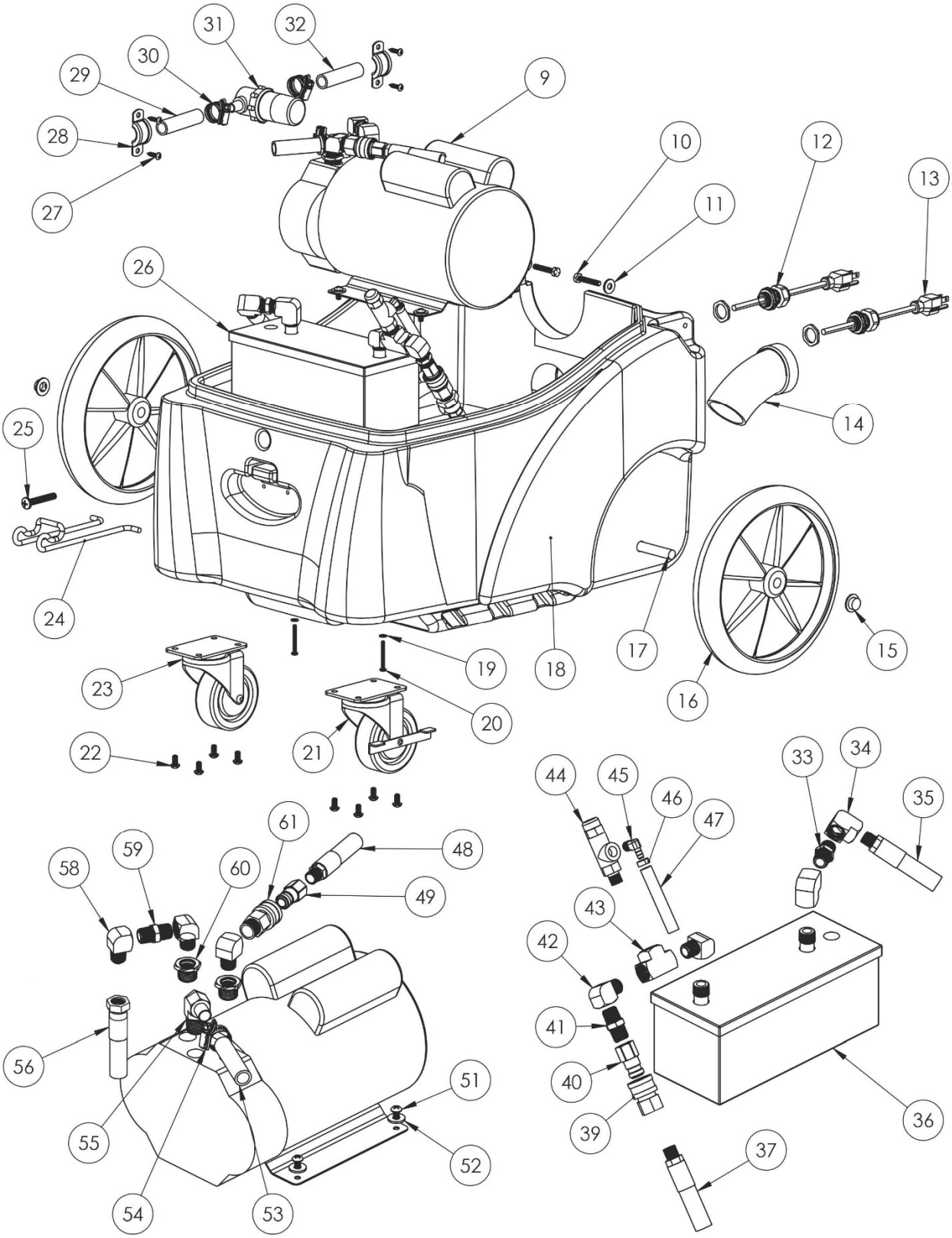

BASE ASSEMBLY 120 VOLT

ITEM	PART NO.	DESCRIPTION	QTY
9	4099441	PUMP, 500 PSI, EXTRACTOR,120 VOLT	1
10	9121780	5/16 -18 x 1-1/2 HEX HEAD BOLT (PK-2)	2
11	9121390	11/32 ID X 11/16 OD FLAT WASHER (5/16) (PK-10)	2
12	4099321	STRAIN RELIEF, HEYCO - PG16, WITH NUT	2
13	4099331	CORD, PIG TAIL, 12-3 SJTW	2
14	4093041	SPOUT, DRAIN GATE	1
15	4092151	NUT, PUSH - ON, HUB CAP, 1/2 AXLE	2
16	4099811	WHEEL, 10" DIA, EXTRATOR	2
17	4099551	AXLE, 1/2" DIA X 20 LONG, 10' WHEEL, EXTRACTOR	1
18	4099021	BASE, EXTRACTOR, 12 GAL, BLACK	1
19	9120935	1/4 WASHER, .268 ID x .5 OD x .060 THK (PK-10)	2
20	9120781	10-32 X 1-1/2 PAN HEAD PHILIPS M/S (PK-6)	2
21	4099831	CASTER, 3.5" DIA, W/BRAKE, EXTRATOR	1
22	9121045	1/4-20 x 1/2 ROUND HEAD PHILIPS M/S (PK-10)	8
23	4099821	CASTER, 3.5" DIA, EXTRATOR	1
24	4099611	HOOK, HOSE, LOWER	1
25	9121810	5/16-18 X 2 ROUND HEAD PHILIPS M/S (PK 2)	1
26	4099221	ENCLOSURE FOR DUAL ROD HEATER	1
27	9121212	#12 x 1/2 PHILIPS HEAD SHEET METAL SCREW (PK-6)	4
28	4098651	CLAMP, 3/8" CUSHIONED	2
29	4098811	HOSE, 1/2 ID CLEAR, REINFORCED, 50" LONG	1
30	2392141	HOSE CLAMP 11/16 to 1 1/4 DIA	2
31	4092511	FILTER, INLINE, 1/2 HOSE BARB - 1/2 HOSE BARB	1
	3393611	STRAINER ELEMENT	1
	3394559	KIT, INCLUDES BOWL AND GASKET	1
32	4098831	HOSE, 1/2 CLEAR, REINFORCED, 6" LONG	1
33	4098911	VALVE, CHECK, INLINE, 1/4 MNPT	1
34	3891141	FITTING, BRASS ELBOW, 90 DEGREE x 1/4" FNPT	1
35	4098711	HOSE, 3/8 PULSE, 1/4 MNPT - 1/4 FNPT, 15” LONG	1
36	4099251	HEATER, 12 GAL, COMPLETE ASSEMBLY	1
37	4098721	HOSE, 3/8 PULSE, 1/4 MNPT - 1/4 MNPT, 51” LONG	1
39	4991281	FITTING, 1/4 FNPT - 1/4 FEMALE QUICK DISCONNECT	1
40	4991291	FITTING, 1/4 FNPT - 1/4 MALE QUICK DISCONNECT	1
41	3891941	FITTING,NIPPLE,HEX,1/4 MNPT	1
42	2795851	FTG, 90 DEGREE, STREET EL, 1/4 NPT	2
43	4096811	FITTING, TEE, 1/4 FNPT, BRASS	1
44	4099231	VALVE, 700 PSI SIDE RELIEF,1/4 NPT	1
45	4098931	FITTING, 1/4 MNPT - 1/4 HOSE BARB, 90DEGREE, BRASS	1
46	4098661	CLAMP, OETIKER #140	1
47	4098821	HOSE, 1/4" ID RED,300 PSI, 33-1/4 LONG	1
48	4098731	HOSE, 3/8 PULSE, 1/4 MNPT - 1/4 MNPT, 46 LONG	1
49	4991291	FITTING, 1/4 FNPT - 1/4 MALE QUICK DISCONNECT	1
51	9121045	1/4-20 X 1/2 ROUND HEAD PHILIPS M/S (PK-10)	4
52	9121390	11/32 ID X 11/16 OD FLAT WASHER (5/16) (PK-10)	4
53	4098831	HOSE, 1/2 CLEAR, REINFORCED, 6" LONG	1
54	2392141	HOSE CLAMP 11/16 to 1 1/4 DIA	1
55	4099161	FITTING, 3/8 MNPT X 1/2 HOSE BARB, 90	1
56	4098711	HOSE, 3/8 PULSE,1/4 MNPT-1/4 FNPT, 15 LONG	1
58	2795851	FITTING, 90 DEGREE, STREET EL, 1/4 NPT	3
59	3891941	FITTING, NIPPLE, HEX, 1/4 MNPT	1
60	4890211	FITTING, REDUCER, 3/8 MNPT - 1/4 FNPT, BRASS	2
61	4991281	FITTING, 1/4 FNPT - 1/4 FEMALE QUICK DISCONNECT	1

RECOVERY TANK ASSEMBLY 120 VOLT

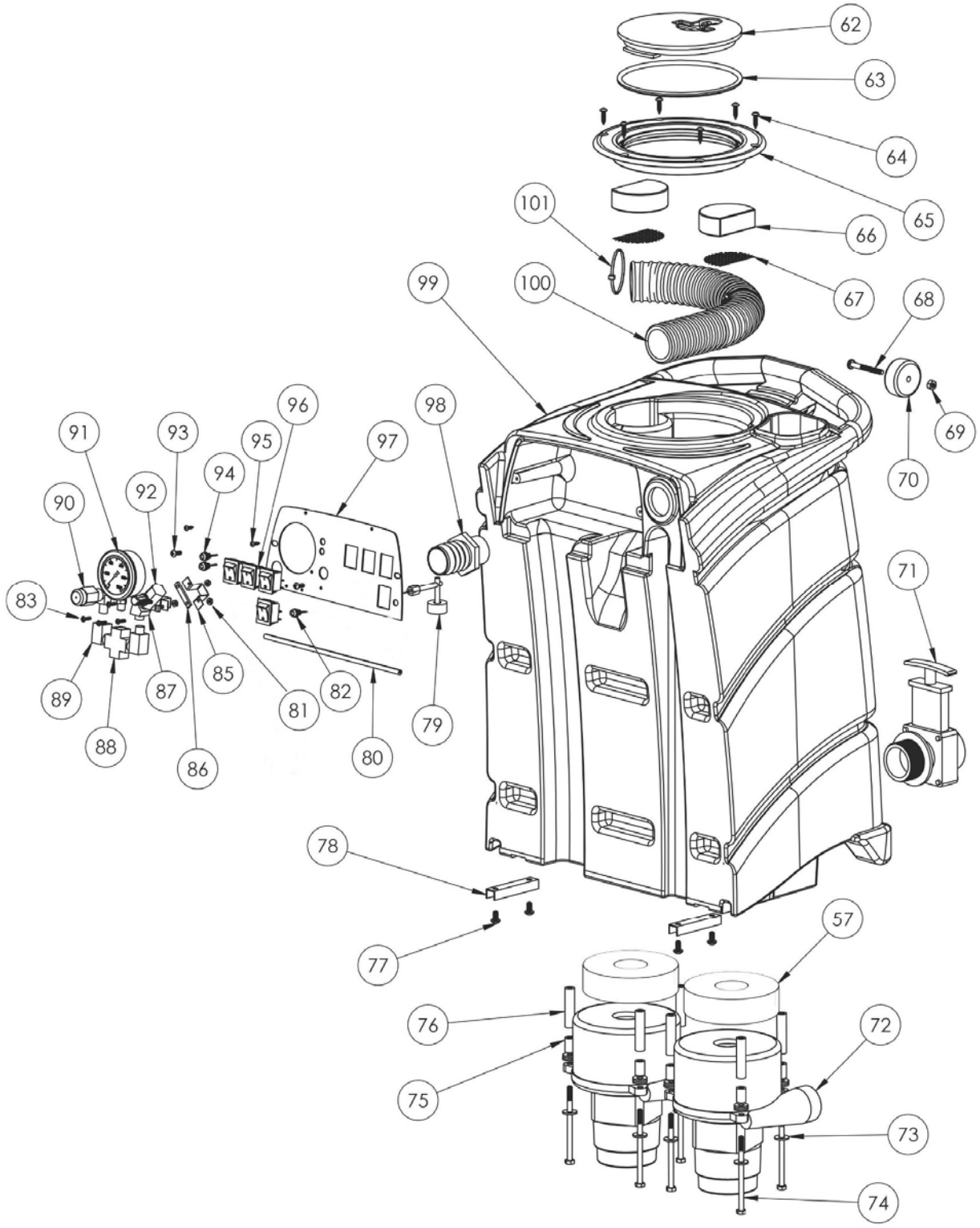

RECOVERY TANK ASSEMBLY 120 VOLT

ITEM	PART NO.	DESCRIPTION	QTY
57	4099691	GASKET, VAC MOTOR	2
62	4099791	LID, RECOVERY, 6" DIA, TWIST LOCK, BLACK	1
63	4099801	O-RING, LID, RECOVERY, 6" DIA, EXTACTOR	1
64	9121212	#12 X 1/2 PHILIPS HEAD SHEET METAL SCREW (PK-6)	6
65	4099791	LID, RECOVERY, 6" DIA, TWIST LOCK, BLACK	1
66	4099711	FILTER, INTAKE, EXTRACTOR	2
67	4099661	SCREEN, INTAKE, VAC MOTOR, EXTRACTOR	2
68	9121150	1/4-20 X 2-1/4 ROUND HEAD PHILIPS M/S (PK-2)	1
69	9120920	1/4-20 HEX NUT STAINLESS STEEL (PK-10)	1
70	4099841	WHEEL, 2" DIA, EXTRACTOR, HANDLE	1
71	4091231	VALVE, GATE, DUMP, 1-1/2" MNPT	1
72	4099411	MOTOR, VACUUM, 3 STAGE, 120 VOLT, 116565-00	2
73	9120930	9/32 ID X 5/8 OD FLAT WASHER (1/4) (PK-10)	6
74	9121360	1/4-20 X 4 HEX HEAD BOLT (PK-2)	6
75	4098541	SPACER, 1/2 OD X 1/4 ID X 3/4 LONG, NYLON	6
76	4098561	SPACER, 1/2 OD X 1/4 ID X 2-1/8 LONG, NYLON	6
77	9121045	1/4-20 X 1/2 ROUND HEAD PHILIPS M/S (PK-10)	4
78	4099621	BRACKET, RECOVERY TO SOLUTION	2
79	4099311	SWITCH, FLOAT, HORIZONTAL MOUNT	1
80	4099851	TRIM, CONTROL PANEL, EXTRACTOR	1
81	9120020	6-32 HEX NUT W/ STAR LOCK WASHER	4
82	4099351	LIGHT, LED, RED, 110 VOLT	2
83	9120075	6-32 X 5/8 ROUND HEAD PHILIPS M/S (PK-10)	4
85	4099631	BRACKET, GAUGE CLUSTER	2
86	4099671	SPACER, GAUGE CLUSTER	1
87	2795861	FITTING, STREET EL, 45 DEGREE X 1/4" NPT, BRASS	3
88	3890751	FITTING, CROSS, 1/4 FNPT, BRASS	1
89	2795851	FITTING, 90 DEGREE, STREET EL, 1/4 NPT, BRASS	2
90	4099431	REGULATOR, 600 PSI, EXTRACTOR	1
91	4099421	GAUGE, 1000 PSI, EXTRATOR	1
92	4098971	VALVE, 1/4" MNPT X 1/4" FNPT, MINI	1
93	9120715	10-32 X 1/2 PAN HEAD PHILIPS M/S (PK-5)	2
94	4099361	LIGHT, LED,GREEN, 220 VOLT	1
95	9120140	#6 X 5/8 PAN HEAD PHILIPS SHEET METAL SCREW (PK-3)	2
96	4099291	SWITCH, ROCKER, SPLASH PROOF	4
97	4097971	PANEL, 4 SWITCH W/GAUGE, NO HOUR METER, RALLY 500H	1
	4099591	PANEL, 4 SWITCH W/GAUGE & HOUR METER, RALLY 500H	1
98	4091241	HOSE BARB, 1.5", VACUUM	1
99	4099031	TANK, RECOVERY, 12 GAL, BLACK	1
100	4098751	HOSE, DIFFUSING, RECOVERY TANK	1
101	9123000	11" LONG WIRE TIE (PK-5)	2

SOLUTION TANK ASSEMBLY 120 VOLT

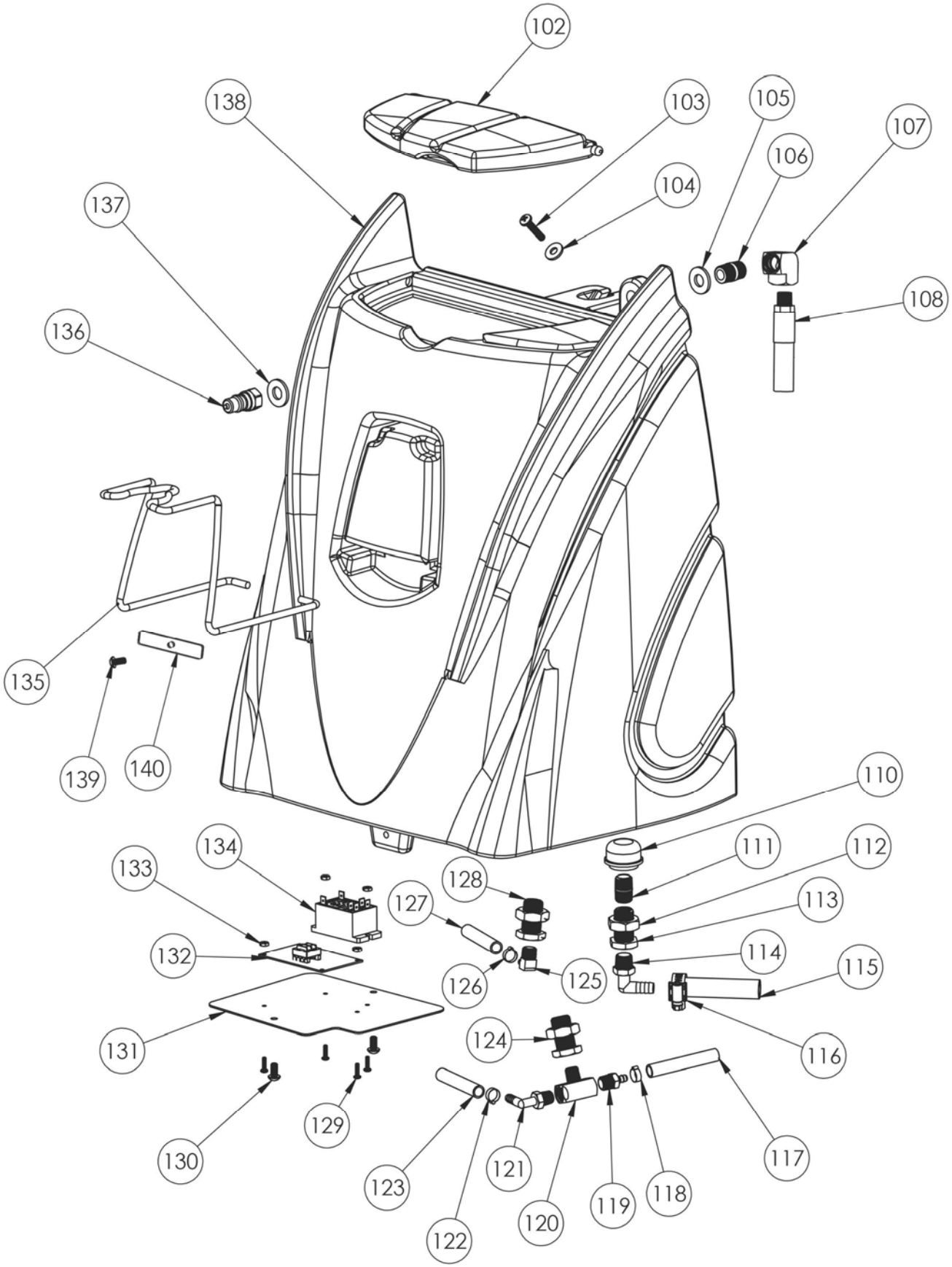

SOLUTION TANK ASSEMBLY 120 VOLT

ITEM	PART NO.	DESCRIPTION	QTY
102	4099041	LID, SOLUTION TANK, 12GAL, BLACK	1
103	9121146	1/4-20 X 1-1/4 ROUND HEAD PHILIPS (PK-2)	1
104	9121390	11/32 ID 11/16 OD FLAT WASHER (5/16) (PK-10)	1
105	9122450	1/2 SAE FLAT WASHER STAINLESS (PK-5)	1
106	4098991	FITTING, PIPE NIPPLE, 1/4 MNPT X 1-1/2 LONG	1
107	3891141	FITTING, BRASS ELBOW,90 DEGREE X1/4" FNPT	1
108	4098721	HOSE, 3/8 PULSE, 1/4 MNPT - 1/4 MNPT, 51 LONG	1
110	4099861	FILTER, 1/4" PIPE, ACORN, EXTRACTOR	1
111	4096041	FITTING,CLOSE NIPPLE,1/4 MNPT	1
112	4098981	FITTING, BULKHEAD, 1/4 NPT	1
113	4098981	FITTING, BULKHEAD, 1/4 NPT	1
114	4099001	FITTING, 1/4 MNPT - 1/2 HOSE BARB, 90 DEGREE, BRASS	1
115	4098811	HOSE,1/2 ID CLEAR, REINFORCED, 50" LONG	1
116	2392141	HOSE CLAMP 11/16 to 1 1/4 DIA	1
117	4098821	HOSE, 1/4" ID RED, 300 PSI, 33-1/4 LONG	1
118	4098661	CLAMP, OETIKER #140	1
119	6190551	FITTING, 1/4 HOSE BARB - 1/4 MNPT, STRAIGHT, BRASS	1
120	4098891	FITTING, BRANCH TEE, 1/4 NPT, BRASS	1
121	4098931	FITTING, 1/4 MNPT - 1/4 HOSE BARB, 90 DEGREE, BRASS	2
122	4098661	CLAMP, OETIKER #140	1
123	4098841	HOSE, 1/4" ID CLEAR BRAIDED, 32" LONG	1
124	4098981	FITTING, BULKHEAD, 1/4 NPT	1
125	4098931	FITTING, 1/4 MNPT - 1/4 HOSE BARB, 90 DEGREE, BRASS	1
126	4098661	CLAMP, OETIKER #140	1
127	4098851	HOSE, 1/4" ID CLEAR BRAIDED, 31" LONG	1
128	4098981	FITTING, BULKHEAD, 1/4 NPT	1
129	9120075	6-32 X 5/8 ROUND HEAD PHILIPS M/S (PK-10)	4
130	9121045	1/4-20 X 1/2 ROUND HEAD PHILIPS M/S (PK-10)	2
131	4099651	COVER, ELECTRICAL COMPARTMENT	1
132	4099371	DUAL CIRCUIT INDICATOR, 120 VOLT	1
133	9120020	6-32 HEX NUT W/ STAR LOCK WASHER	4
134	4099301	RELAY, VACUUM MOTOR, 12GAL, 120 VOLT	1
135	4099601	HOOK, HOSE, UPPER	1
136	3590751	FITTING, 1/4" FNPT X 1/4 MALE QUICK DISCONNECT	1
137	9122450	1/2 SAE FLAT WASHER STAINLESS STEEL (PK-5)	1
138	4099051	TANK, SOLUTION, 12 GAL, GREEN	1
139	9121045	1/4-20 X 1/2 ROUND HEAD PHILIPS M/S (PK 10)	1
140	4099641	PLATE, KEEPER, HOSE HOOK, UPPER	1

WIRE DIAGRAM 120 VOLT

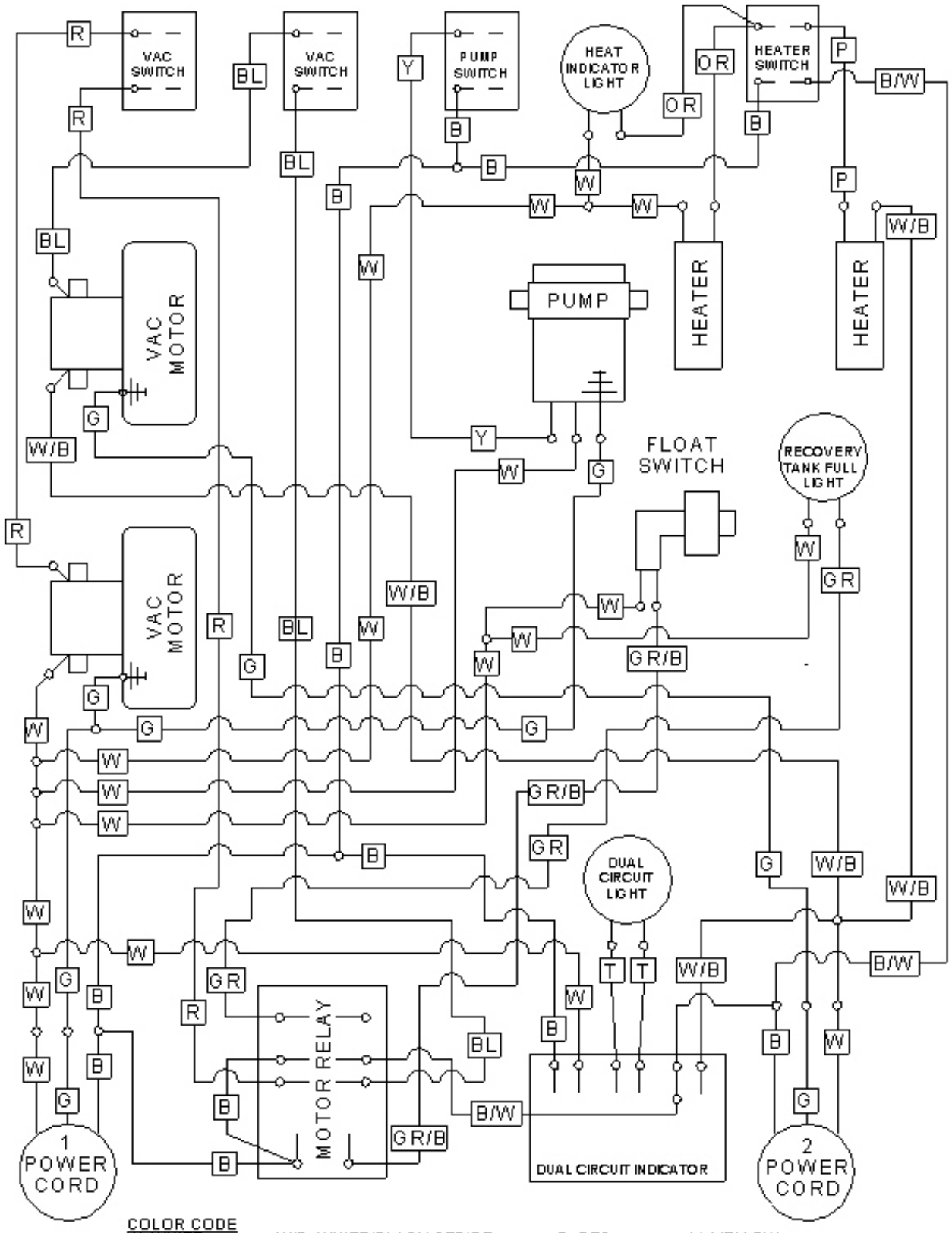

COLOR CODE

W=WHITE
B=BLACK
G=GREEN
W/B=WHITE/BLACK STRIPE
B/W=BLACK/WHITE STRIPE
GR/B=GREY/BLACK STRIPE
R=RED
BL=BLUE
GR=GREY
Y=YELLOW
T=TAN
OR=ORANGE

WIRE DIAGRAM 240 VOLT

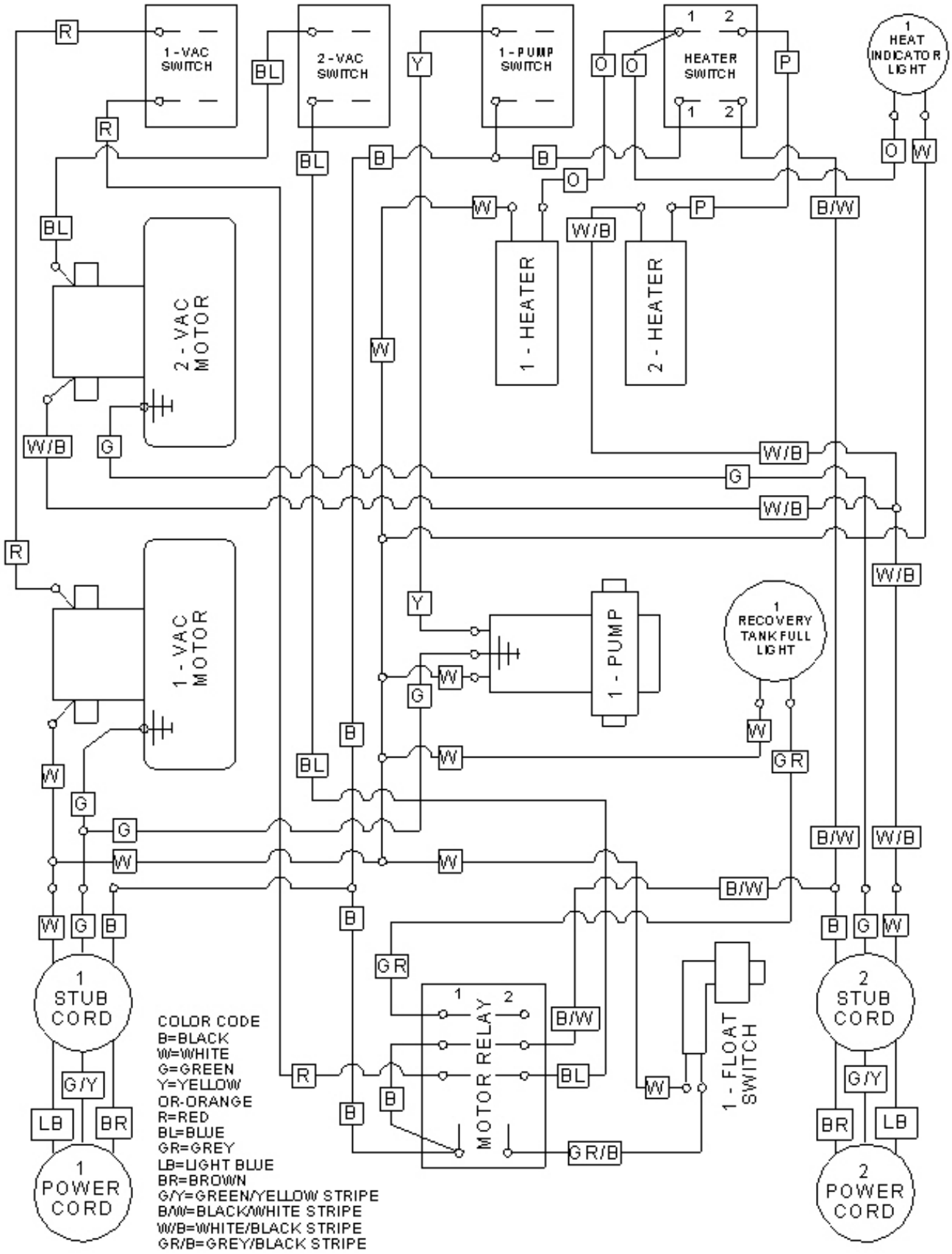

OVERVIEW 240 VOLT

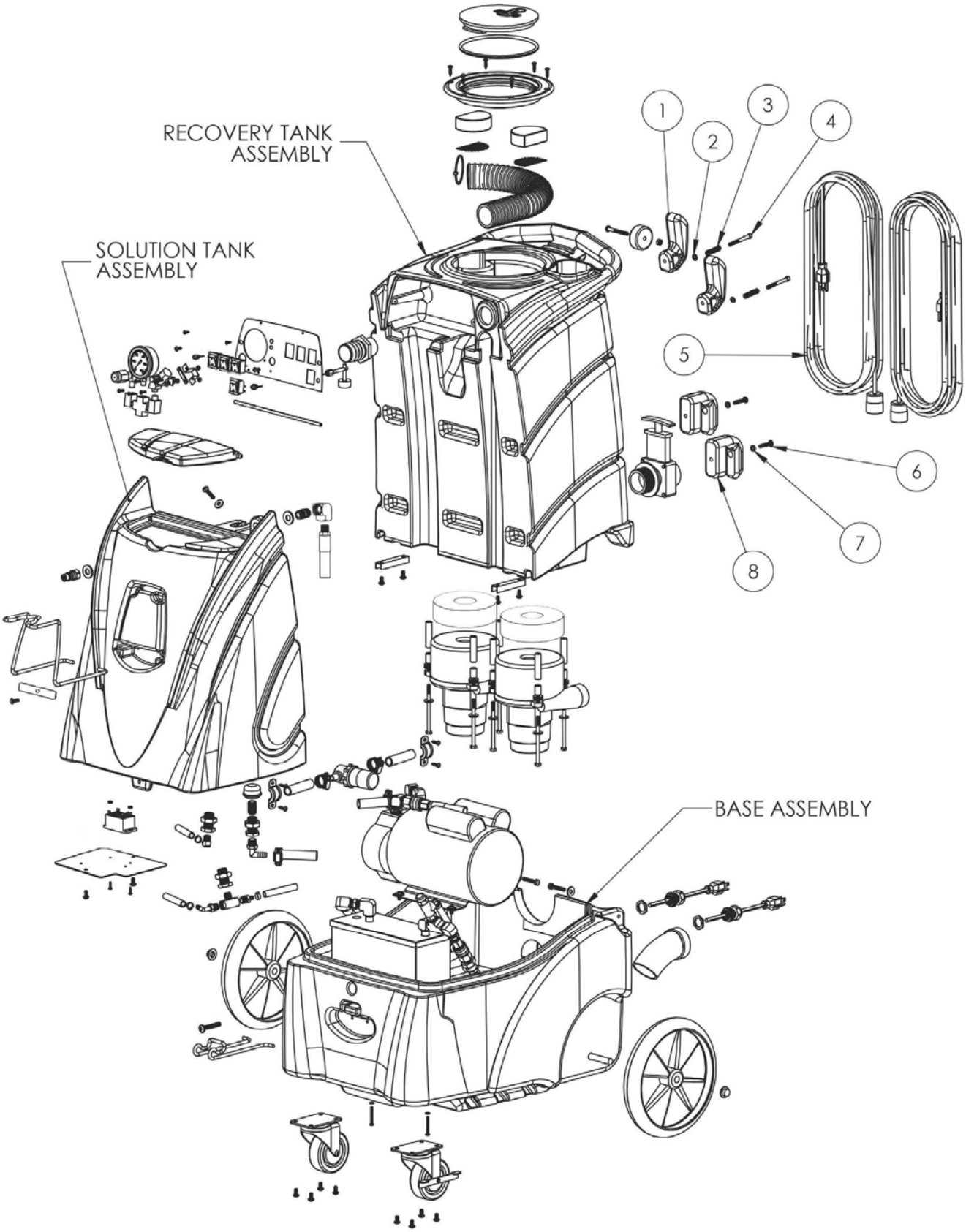

OVERVIEW 240 VOLT

ITEM	PART NO.	DESCRIPTION	QTY
1	4099011	CORD WRAP, (SET FOR ONE CORD, FASTENERS NOT INCLUDED)	2
2	9120935	1/4 WASHER, .268 ID x .5 OD x .060 THK (PK-10)	2
3	4098551	SPRING, CORD WRAP, UPPER	2
4	9121150	1/4-20 x 2-1/4 ROUND HEAD PHILIPS MACHINE SCREW (PK-2)	2
5	4898721	CORD, SHUKO W/TWIST LOCK, 50 FEET LONG	2
6	9121141	1/4-20 X 1 ROUND HEAD PHILIPS MACHINE SCREW (PK-5)	2
7	9120935	1/4 WASHER, .268 ID x .5 OD x .060 THK (PK-10)	2
8	4099011	CORD WRAP, (SET FOR ONE CORD, FASTENERS NOT INCLUDED)	2
N/S	4093351	1.5" X 25' VACUUM HOSE	1
N/S	4093331	25' HIGH PRESSURE LINE COMP.	1

BASE ASSEMBLY 240 VOLT

BASE ASSEMBLY 240 VOLT

ITEM	PART NO.	DESCRIPTION	QTY
9	4099441	PUMP, 500 PSI, EXTRACTOR,120 VOLT	1
10	9121780	5/16 -18 x 1-1/2 HEX HEAD BOLT (PK-2)	2
11	9121390	11/32 ID X 11/16 OD FLAT WASHER (5/16) (PK-10)	2
12	4099321	STRAIN RELIEF, HEYCO - PG16, WITH NUT	2
13	4892711	CORD, PIG TAIL, W/TWIST LOCK,17” LONG, 240 VOLT	2
14	4093041	SPOUT, DRAIN GATE	1
15	4092151	NUT, PUSH - ON, HUB CAP, 1/2 AXLE	2
16	4099811	WHEEL, 10" DIA, EXTRATOR	2
17	4099551	AXLE, 1/2" DIA X 20 LONG, 10' WHEEL, EXTRACTOR	1
18	4099021	BASE, EXTRACTOR, 12 GAL, BLACK	1
19	9120935	1/4 WASHER, .268 ID x .5 OD x .060 THK (PK-10)	2
20	9120781	10-32 X 1-1/2 PAN HEAD PHILIPS M/S (PK-6)	2
21	4099831	CASTER, 3.5" DIA, W/BRAKE, EXTRATOR	1
22	9121045	1/4-20 x 1/2 ROUND HEAD PHILIPS M/S (PK-10)	8
23	4099821	CASTER, 3.5" DIA, EXTRATOR	1
24	4099611	HOOK, HOSE, LOWER	1
25	9121810	5/16-18 X 2 ROUND HEAD PHILIPS M/S (PK 2)	1
26	4099221	ENCLOSURE FOR DUAL ROD HEATER	1
27	9121212	#12 x 1/2 PHILIPS HEAD SHEET METAL SCREW (PK-6)	4
28	4098651	CLAMP, 3/8" CUSHIONED	2
29	4098811	HOSE, 1/2 ID CLEAR, REINFORCED, 50" LONG	1
30	2392141	HOSE CLAMP 11/16 to 1 1/4 DIA	2
31	4092511	FILTER, INLINE, 1/2 HOSE BARB - 1/2 HOSE BARB	1
	3393611	STRAINER ELEMENT	1
	3394559	KIT, INCLUDES BOWL AND GASKET	1
32	4098831	HOSE, 1/2 CLEAR, REINFORCED, 6" LONG	1
33	4098911	VALVE, CHECK, INLINE, 1/4 MNPT	1
34	3891141	FITTING, BRASS ELBOW, 90 DEGREE x 1/4" FNPT	1
35	4098711	HOSE, 3/8 PULSE, 1/4 MNPT - 1/4 FNPT, 15” LONG	1
36	4098301	HEATER ELEMENT,240	2
37	4098721	HOSE, 3/8 PULSE, 1/4 MNPT - 1/4 MNPT, 51” LONG	1
39	4991281	FITTING, 1/4 FNPT - 1/4 FEMALE QUICK DISCONNECT	1
40	4991291	FITTING, 1/4 FNPT - 1/4 MALE QUICK DISCONNECT	1
41	3891941	FITTING,NIPPLE,HEX,1/4 MNPT	1
42	2795851	FTG, 90 DEGREE, STREET EL, 1/4 NPT	2
43	4096811	FITTING, TEE, 1/4 FNPT, BRASS	1
44	4099231	VALVE, 700 PSI SIDE RELIEF,1/4 NPT	1
45	4098931	FITTING, 1/4 MNPT - 1/4 HOSE BARB, 90DEGREE, BRASS	1
46	4098661	CLAMP, OETIKER #140	1
47	4098821	HOSE, 1/4" ID RED,300 PSI, 33-1/4 LONG	1
48	4098731	HOSE, 3/8 PULSE, 1/4 MNPT - 1/4 MNPT, 46 LONG	1
49	4991291	FITTING, 1/4 FNPT - 1/4 MALE QUICK DISCONNECT	1
51	9121045	1/4-20 X 1/2 ROUND HEAD PHILIPS M/S (PK-10)	4
52	9121390	11/32 ID X 11/16 OD FLAT WASHER (5/16) (PK-10)	4
53	4098831	HOSE, 1/2 CLEAR, REINFORCED, 6" LONG	1
54	2392141	HOSE CLAMP 11/16 to 1 1/4 DIA	1
55	4099161	FITTING, 3/8 MNPT X 1/2 HOSE BARB, 90	1
56	4098711	HOSE, 3/8 PULSE,1/4 MNPT-1/4 FNPT, 15 LONG	1
58	2795851	FITTING, 90 DEGREE, STREET EL, 1/4 NPT	3
59	3891941	FITTING, NIPPLE, HEX, 1/4 MNPT	1
60	4890211	FITTING, REDUCER, 3/8 MNPT - 1/4 FNPT, BRASS	2
61	4991281	FITTING, 1/4 FNPT - 1/4 FEMALE QUICK DISCONNECT	1

RECOVERY TANK ASSEMBLY 240 VOLT

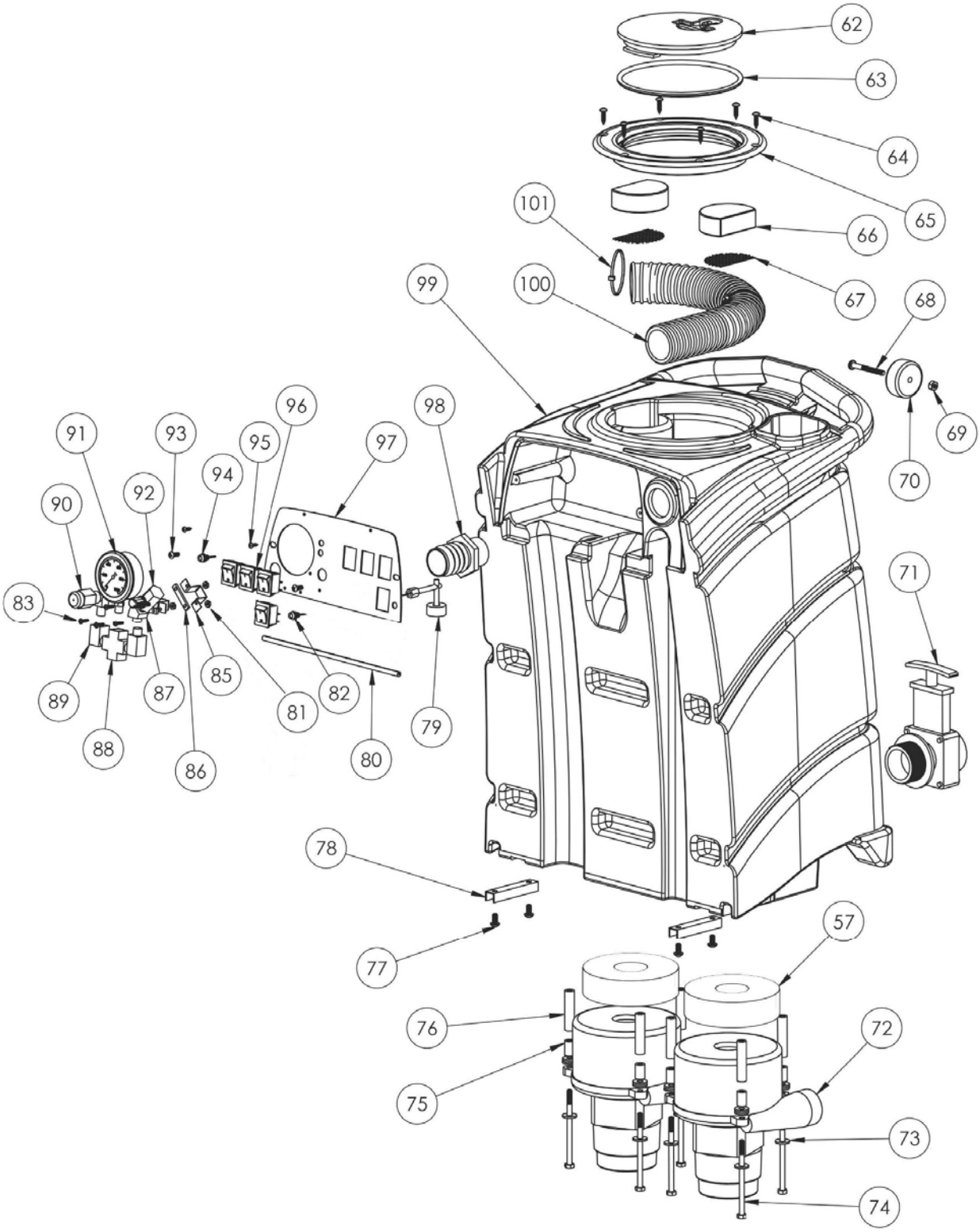

RECOVERY TANK ASSEMBLY 240 VOLT

ITEM	PART NO.	DESCRIPTION	QTY
57	4099691	GASKET, VAC MOTOR	2
62	4099791	LID, RECOVERY, 6" DIA, TWIST LOCK, BLACK	1
63	4099801	O-RING, LID, RECOVERY, 6" DIA, EXTACTOR	1
64	9121212	#12 X 1/2 PHILIPS HEAD SHEET METAL SCREW (PK-6)	6
65	4099791	LID, RECOVERY, 6" DIA, TWIST LOCK, BLACK	1
66	4099711	FILTER, INTAKE, EXTRACTOR	2
67	4099661	SCREEN, INTAKE, VAC MOTOR, EXTRACTOR	2
68	9121150	1/4-20 X 2-1/4 ROUND HEAD PHILIPS M/S (PK-2)	1
69	9120920	1/4-20 HEX NUT STAINLESS STEEL (PK-10)	1
70	4099841	WHEEL, 2" DIA, EXTRACTOR, HANDLE	1
71	4091231	VALVE, GATE, DUMP, 1-1/2" MNPT	1
72	4098171	MOTOR, VACUUM, 3 STAGE, 240 VOLT	2
73	9120930	9/32 ID X 5/8 OD FLAT WASHER (1/4) (PK-10)	6
74	9121360	1/4-20 X 4 HEX HEAD BOLT (PK-2)	6
75	4098541	SPACER, 1/2 OD X 1/4 ID X 3/4 LONG, NYLON	6
76	4098561	SPACER, 1/2 OD X 1/4 ID X 2-1/8 LONG, NYLON	6
77	9121045	1/4-20 X 1/2 ROUND HEAD PHILIPS M/S (PK-10)	4
78	4099621	BRACKET, RECOVERY TO SOLUTION	2
79	4099311	SWITCH, FLOAT, HORIZONTAL MOUNT	1
80	4099851	TRIM, CONTROL PANEL, EXTRACTOR	1
81	9120020	6-32 HEX NUT W/ STAR LOCK WASHER	4
82	4098221	LIGHT, LED, RED, 220 VOLT	1
83	9120075	6-32 X 5/8 ROUND HEAD PHILIPS M/S (PK-10)	4
85	4099631	BRACKET, GAUGE CLUSTER	2
86	4099671	SPACER, GAUGE CLUSTER	1
87	2795861	FITTING, STREET EL, 45 DEGREE X 1/4" NPT, BRASS	3
88	3890751	FITTING, CROSS, 1/4 FNPT, BRASS	1
89	2795851	FITTING, 90 DEGREE, STREET EL, 1/4 NPT, BRASS	2
90	4099431	REGULATOR, 600 PSI, EXTRACTOR	1
91	4099421	GAUGE, 1000 PSI, EXTRATOR	1
92	4098971	VALVE, 1/4" MNPT X 1/4" FNPT, MINI	1
93	9120715	10-32 X 1/2 PAN HEAD PHILIPS M/S (PK-5)	2
94	4098221	LIGHT, LED, RED, 220 VOLT	1
95	9120140	#6 X 5/8 PAN HEAD PHILIPS SHEET METAL SCREW (PK-3)	2
96	4099291	SWITCH, ROCKER, SPLASH PROOF	4
97	4097981	PANEL, 4 SWITCH W/GAUGE,NO HOUR METER, RALLY 500H	1
	4098451	PANEL, 4 SWITCH W/GAUGE & HOUR METER, RALLY 500H	1
98	4091241	HOSE BARB, 1.5", VACUUM	1
99	4099031	TANK, RECOVERY, 12 GAL, BLACK	1
100	4098751	HOSE, DIFFUSING, RECOVERY TANK	1
101	9123000	11" LONG WIRE TIE (PK-5)	2

SOLUTION TANK ASSEMBLY 240 VOLT

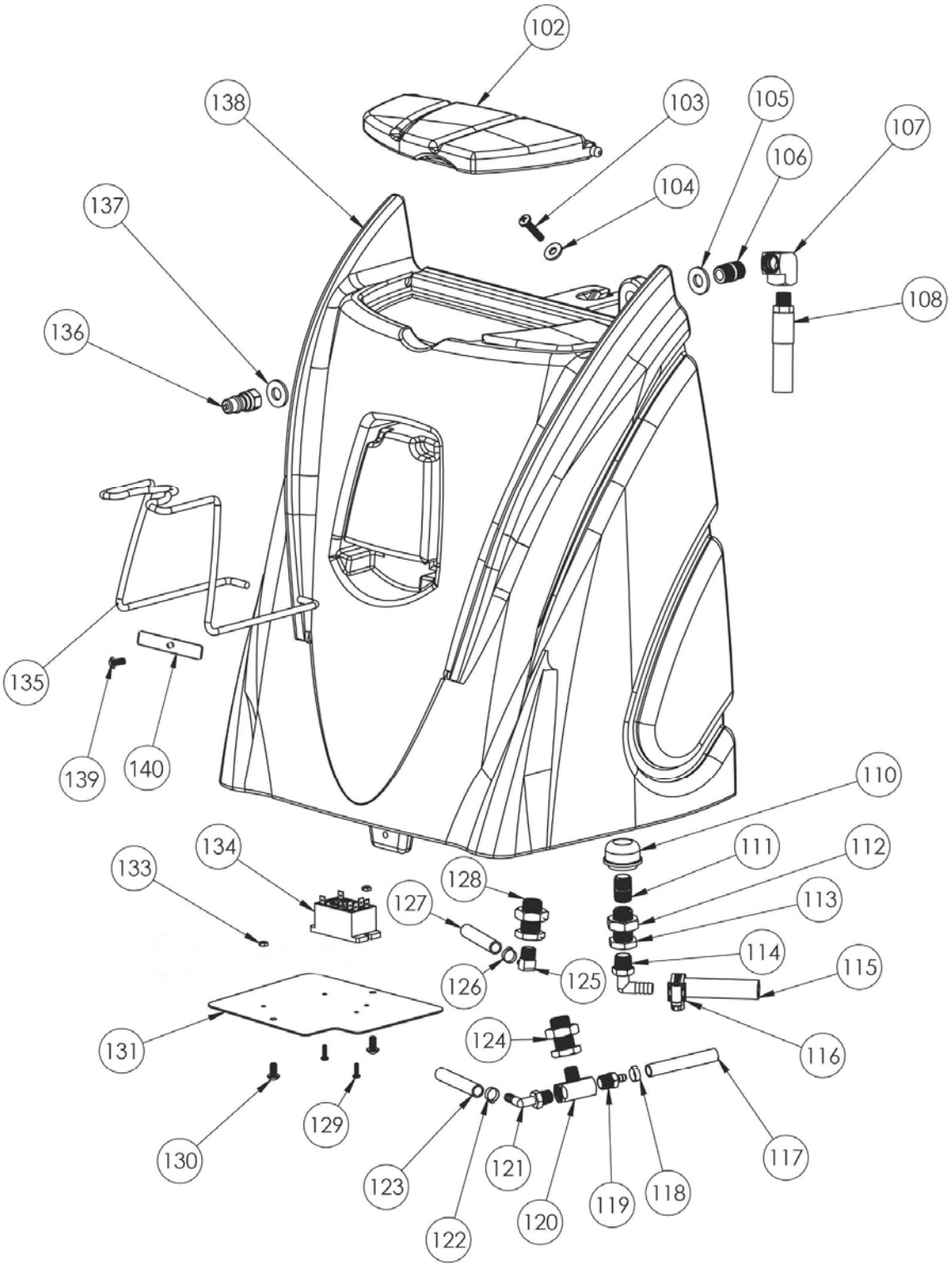

SOLUTION TANK ASSEMBLY 240 VOLT

ITEM	PART NO.	DESCRIPTION	QTY
102	4099041	LID, SOLUTION TANK, 12GAL, BLACK	1
103	9121146	1/4-20 X 1-1/4 ROUND HEAD PHILIPS (PK-2)	1
104	9121390	11/32 ID 11/16 OD FLAT WASHER (5/16) (PK-10)	1
105	9122450	1/2 SAE FLAT WASHER STAINLESS (PK-5)	1
106	4098991	FITTING, PIPE NIPPLE, 1/4 MNPT X 1-1/2 LONG	1
107	3891141	FITTING, BRASS ELBOW,90 DEGREE X1/4" FNPT	1
108	4098721	HOSE, 3/8 PULSE, 1/4 MNPT - 1/4 MNPT, 51 LONG	1
110	4099861	FILTER, 1/4" PIPE, ACORN, EXTRACTOR	1
111	4096041	FITTING,CLOSE NIPPLE,1/4 MNPT	1
112	4098981	FITTING, BULKHEAD, 1/4 NPT	1
113	4098981	FITTING, BULKHEAD, 1/4 NPT	1
114	4099001	FITTING, 1/4 MNPT - 1/2 HOSE BARB, 90 DEGREE, BRASS	1
115	4098811	HOSE,1/2 ID CLEAR, REINFORCED, 50" LONG	1
116	2392141	HOSE CLAMP 11/16 to 1 1/4 DIA	1
117	4098821	HOSE, 1/4" ID RED, 300 PSI, 33-1/4 LONG	1
118	4098661	CLAMP, OETIKER #140	1
119	6190551	FITTING, 1/4 HOSE BARB - 1/4 MNPT, STRAIGHT, BRASS	1
120	4098891	FITTING, BRANCH TEE, 1/4 NPT, BRASS	1
121	4098931	FITTING, 1/4 MNPT - 1/4 HOSE BARB, 90 DEGREE, BRASS	2
122	4098661	CLAMP, OETIKER #140	1
123	4098841	HOSE, 1/4" ID CLEAR BRAIDED, 32" LONG	1
124	4098981	FITTING, BULKHEAD, 1/4 NPT	1
125	4098931	FITTING, 1/4 MNPT - 1/4 HOSE BARB, 90 DEGREE, BRASS	1
126	4098661	CLAMP, OETIKER #140	1
127	4098851	HOSE, 1/4" ID CLEAR BRAIDED, 31" LONG	1
128	4098981	FITTING, BULKHEAD, 1/4 NPT	1
129	9120075	6-32 X 5/8 ROUND HEAD PHILIPS M/S (PK-10)	2
130	9121045	1/4-20 X 1/2 ROUND HEAD PHILIPS M/S (PK-10)	2
131	4099651	COVER, ELECTRICAL COMPARTMENT	1
133	9120020	6-32 HEX NUT W/ STAR LOCK WASHER	2
134	4098251	RELAY, VACUUM MOTOR, 12GAL, 240 VOLT	1
135	4099601	HOOK, HOSE, UPPER	1
136	3590751	FITTING, 1/4" FNPT X 1/4 MALE QUICK DISCONNECT	1
137	9122450	1/2 SAE FLAT WASHER STAINLESS STEEL (PK-5)	1
138	4099051	TANK, SOLUTION, 12 GAL, GREEN	1
139	9121045	1/4-20 X 1/2 ROUND HEAD PHILIPS M/S (PK 10)	1
140	4099641	PLATE, KEEPER, HOSE HOOK, UPPER	1

ACCESSORIES

4090509	TOOLKIT, EXTRACTOR, UPHOLSTERY, STAIR, HYDROGLIDE
4096841	4" WIDE UPHOLSTERY TOOL 500PSI
4093241	WAND, 2JET, EXTRACTOR, HYDROGLIDE
4097301	30" X 9 3/4 STAIR TOOL
4098069	TOOLKIT, EXTRACTOR, UPHOLSTERY, STAIR, 2JET SS WAND
4093251	WAND, 2 JET, STAINLESS STEEL
4096841	4" WIDE UPHOLSTERY TOOL 500PSI
4097301	30" X 9 3/4 STAIR TOOL
4098079	TOOLKIT, EXTRACTOR, DETAL, STAIR, CREVIC
4096851	3.5" DETAIL TOOL 500 PSI
4096871	18" INTERNAL SPRAY CREVICE TOOL
4097301	30" X 9 3/4 STAIR TOOL

4093371	WAND, 2JET, EXTRACTOR, HYDROGLIDE
4093251	WAND, 2 JET, STAINLESS STEEL
4097951	BRASS TRIGGER VALVE
4096841	4" WIDE UPHOLSTERY TOOL 500PSI
4097301	30" X 9 3/4 STAIR TOOL
4098491	TOOL, DETAIL, 4” CLEAR HEAD
4096851	3.5" DETAIL TOOL 500 PSI
4096871	18" INTERNAL SPRAY CREVICE TOOL
4090321	1.5" X 50' VACUUM HOSE
4090311	50' HIGH PRESSURE LINE COMP.

NSS® Enterprises, Inc.
3115 Frenchmens Road, Toledo, Ohio 43607
PHONE (419) 531-2121 FAX (419) 531-3761
mailus@nss.com www.nss.com