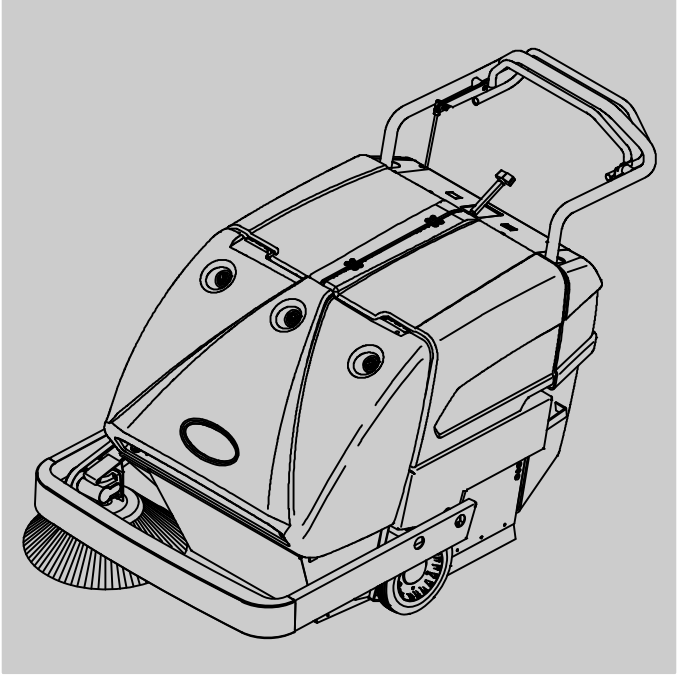

S10

(Battery)

Sweeper
Operator Manual

North America / International

For the latest parts manual or other language operator manual, visit:

www.tennantco.com/manuals

331580
Rev. 07 (5-2023)

This manual is furnished with each new model. It provides necessary operation and maintenance instructions.

Read this manual completely and understand the machine before operating or servicing it.

This machine will provide excellent service. However, the best results will be obtained at minimum costs if:

- The machine is operated with reasonable care.
- The machine is maintained regularly - per the machine maintenance instructions provided.
- The machine is maintained with manufacturer supplied or equivalent parts.

PROTECT THE ENVIRONMENT

Please dispose of packaging materials, used components such as batteries and fluids in an environmentally safe way according to local waste disposal regulations.

Always remember to recycle.

MACHINE DATA

Please fill out at time of installation for future reference.

Model No. − _____

Serial No. − _____

Installation Date − _____

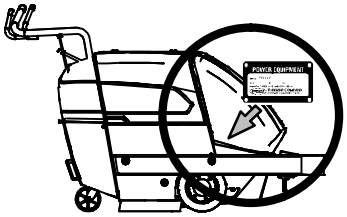

Tennant Company
PO Box 1452
Minneapolis, MN 55440
Phone: (800) 553−8033
www.tennantco.com

Thermo−Sentry is a trademark of Tennant Company.

Specifications and parts are subject to change without notice.

Original instructions, Copyright © 2007, 2009, 2010, 2015, 2017, 2018, 2023 TENNANT, Printed in U.S.A.

CONTENTS

	Page
SAFETY PRECAUTIONS	2
OPERATION	4
MACHINE COMPONENTS	4
SYMBOL DEFINITIONS	5
CONTROLS AND INSTRUMENTS	6
OPERATION OF CONTROLS	7
PROPEL CONTROL HANDLES	7
FILTER SHAKER OVERRIDE SWITCH	7
BATTERY CHARGE INDICATOR	8
BATTERY CHARGER PANEL	8
HOUR METER	9
MAIN BRUSH LEVER	9
SIDE BRUSH ARM	10
PARKING BRAKE LEVER	10
CIRCUIT BREAKERS AND FUSES	11
BRUSH INFORMATION	11
MACHINE OPERATION	12
PRE−OPERATION CHECKLIST	12
SWEEPING	12
EMPTYING THE HOPPER	13
REMOVING THE HOPPER	14
MACHINE TROUBLESHOOTING	15
MAINTENANCE	16
MAINTENANCE CHART	16
LUBRICATION	18
DRIVE CHAINS	18
DIFFERENTIAL	18
BRUSH ARM PIVOTS	18
REAR CASTER	18
SIDE BRUSH GEAR BOX	19
SELF ADJUSTING SHEAVE	19
BATTERIES	20
LEAD ACID BATTERIES	20
CHARGING BATTERIES	21
ELECTRIC MOTORS	23
BELTS & CHAINS	23
PROPELLING BELTS	23
CHECKING AND ADJUSTING THE PROPELLING BELT TENSION	23
SIDE BRUSH BELT	24
CHECKING AND ADJUSTING THE SIDE BRUSH BELT TENSION	24
MAIN BRUSH BELTS	25
VACUUM FAN BELT	25
CHECKING AND ADJUSTING THE VACUUM FAN BELT TENSION	25
WHEEL DRIVE CHAINS	26
STATIC DRAG CHAIN	26
BRUSHES	26
MAIN BRUSH	26
REMOVING THE MAIN BRUSH	26
INSTALLING THE MAIN BRUSH	26
CHECKING AND ADJUSTING THE MAIN BRUSH PATTERN	27
SIDE BRUSH	28
REMOVING THE SIDE BRUSH	28
INSTALLING THE SIDE BRUSH	28
ADJUSTING THE SIDE BRUSH	28
DEBRIS HOPPER & DUST FILTER	29
DEBRIS HOPPER	29
CHECKING AND ADJUSTING THE HOPPER FLOOR CLEARANCE	29
ADJUSTING THE DUST FILTER TO HOPPER SEALING	29
THERMO-SENTRY	30
DUST FILTER	30
REMOVING THE DUST FILTER	30
INSTALLING THE DUST FILTER	30
SKIRTS & SEALS	31
HOPPER LIP SKIRT	31
REAR BRUSH SKIRTS	31
HOPPER TOP SEAL	31
MAIN BRUSH SKIRTS AND SEALS	31
PROPEL HANDLE ASSEMBLY	32
ADJUST PROPEL HANDLE ASSEMBLY	32
TRANSPORTING AND STORING THE MACHINE	33
TRANSPORTING THE MACHINE	33
STORING MACHINE	33
SPECIFICATIONS	34
GENERAL MACHINE DIMENSIONS/CAPACITIES	34
GENERAL MACHINE PERFORMANCE	34
POWER TRAIN	34
TIRES	35
MACHINE DIMENSIONS	35
INDEX	36

SAFETY PRECAUTIONS

The following symbols are used throughout this manual as indicated in their description:

WARNING: To warn of hazards or unsafe practices that could result in severe personal injury or death.

FOR SAFETY: To identify actions that must be followed for safe operation of equipment.

The following information signals potentially dangerous conditions to the operator or equipment. Read this manual carefully. Know when these conditions can exist. Locate all safety devices on the machine. Then, take necessary steps to train machine operating personnel. Report machine damage or faulty operation immediately. Do not use the machine if it is not in proper operating condition.

WARNING: Batteries emit hydrogen gas. Explosion or fire can result. Keep sparks and open flame away. Keep covers open when charging.

WARNING: Disconnect battery cables and charger plug before servicing machine. Do not charge batteries with damaged power supply cord. Do not modify plug.

If the charger supply cord is damaged or broken, it must be replaced by the manufacturer or its service agent or a similarly qualified person in order to avoid a hazard.

WARNING: Heavy hopper. Do not remove without help. Can cause back strain.

This machine is not equipped with explosion proof motors. The electric motors will spark upon start up and during operation which could cause a flash fire or explosion if machine is used in an area where flammable vapors/liquids or combustible dusts are present.

FOR SAFETY:

1. **Do Not Operate Machine:**
   - **Unless Trained And Authorized.**
   - **Unless Operation Manual Is Read And Understood.**
   - **In Flammable Or Explosive Areas Unless Designed For Use In Those Areas.**
   - **Do Not Pick Up Flammable Or Toxic Material, Burning Or Smoking Debris, Or Hazardous Dust**

2. **Before Starting Machine:**
   - **Make Sure All Safety Devices Are In Place And Operate Properly.**

3. **When Using Machine:**
   - **Go Slow On Grades And Slippery Surfaces.**
   - **Use Care When Backing Machine.**
   - **Do Not Operate On Inclines That Exceed 8.75% (5º) With A Full Hopper, Never Operate On Inclines That Exceed 12.2% (7º)**

4. **Before Leaving Or Servicing Machine:**
   - **Stop On Level Surface.**
   - **Set Parking Brake.**
   - **Turn Off Machine And Remove Key.**

5. **When Servicing Machine:**
   - **Avoid Moving Parts. Do Not Wear Loose Jackets, Shirts, Or Sleeves When Working On Machine.**
   - **Use Hoist Or Jack Of Adequate Capacity To Lift Machine.**
   - **Wear Eye And Ear Protection When Using Pressurized Air Or Water.**
   - **Do not pull on battery charger cord to unplug. Grasp plug at outlet and pull.**
   - **Disconnect Battery Connections Before Working On Machine.**
   - **Avoid Contact With Battery Acid.**
   - **Use TENNANT Supplied Or Equivalent Replacement Parts.**

6. **When loading/unloading machine onto/off truck or trailer.**
   - **Turn off machine.**
   - **Use truck or trailer that will support the weight of the machine.**
   - **Use winch. Do not push the machine onto/off the truck or trailer unless the load height is 380 mm (15 in) or less from the ground.**
   - **Block machine tires.**
   - **Tie machine down to truck or trailer.**

The following safety decals are mounted on the machine in the locations indicated. If these, or any decal becomes damaged or illegible, install a new decal in its place.

FOR SAFETY LABEL − LOCATED ON THE CONTROL PANEL.

CHARGER CORD LABEL − LOCATED NEAR CHARGER.

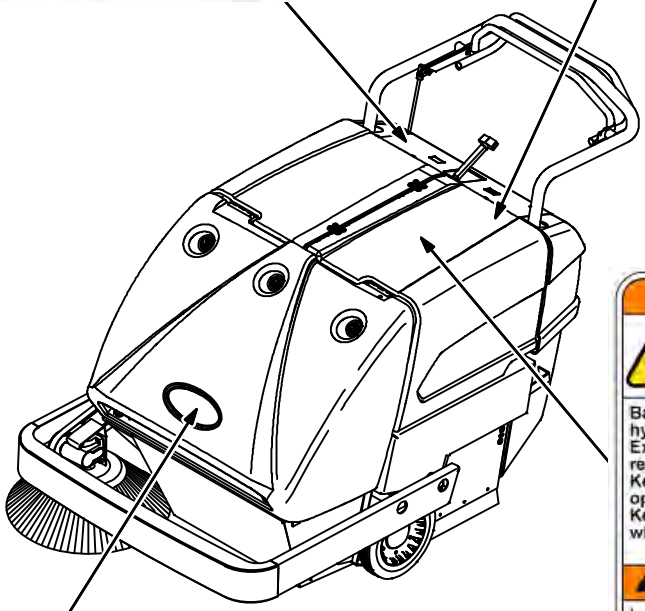

BACK STRAIN LABEL − LOCATED ON THE TOP OF THE HOPPER.

BATTERY CHARGING LABEL − LOCATED ON THE LEFT SIDE PANEL.

OPERATION

MACHINE COMPONENTS

A. Filter Cover
B. Left Access Cover
C. Parking Brake Lever
D. Hopper
E. Side Brush
F. Side Brush Arm
G. Right Access Cover
H. Instrument Panel

SYMBOL DEFINITIONS

The symbols are used to identify controls and displays on the machine:

Filter Shaker

Main Brush Free-Float

Main Brush Down

Main Brush Up

Main Brush Adjust

Circuit Breaker

Circuit Breaker

Hour Meter

Battery Charge Indicator

Electric Key Switch

Key Switch Off

Key Switch On

CONTROLS AND INSTRUMENTS

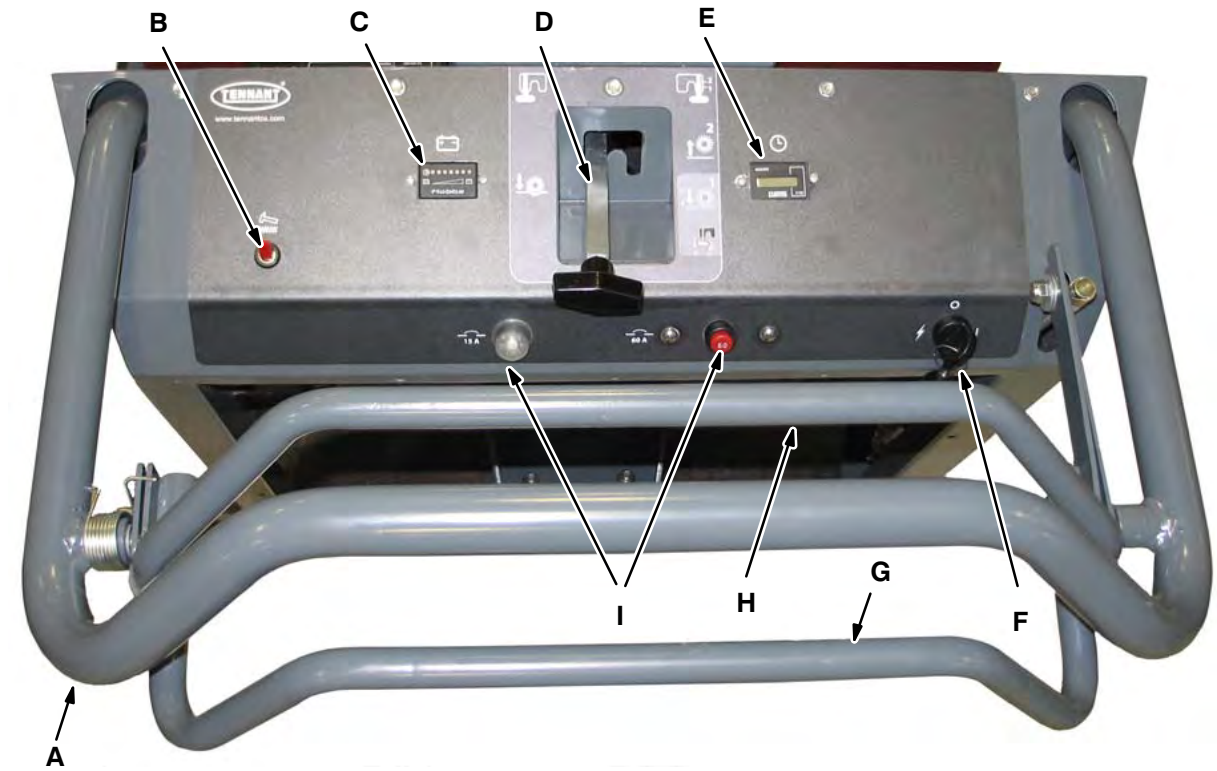

A. Stationary Handle
B. Filter Shaker Override Switch
C. Battery Charge Indicator
D. Main Brush Lever
E. Hour Meter
F. On-Off Key Switch
G. Forward Propel Handle
H. Reverse Propel Handle
I. Circuit Breakers
J. Charger Panel

OPERATION OF CONTROLS

PROPEL CONTROL HANDLES

The propel control handles control the direction of the machine.

To move the machine forward, wrap the fingers around the stationary handle, then press the palms of the hand against the propel handle. To stop the machine, release the handle.

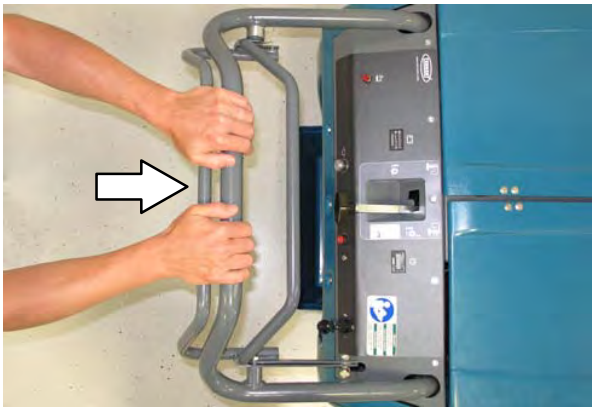

To move the machine backward, squeeze the reverse propel handle. To stop the machine, release the handle.

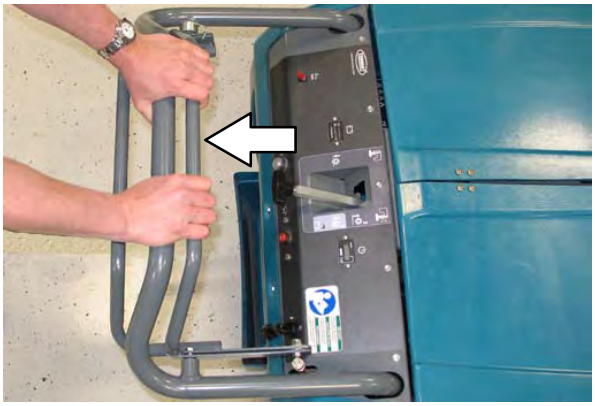

FILTER SHAKER OVERRIDE SWITCH

The filter shaker override switch enables the automatic filter shaker. When the switch is in the “on” position, the filter shaker motor will shake the dust from the filter for 20 seconds when the machine is turned off. The switch should be in the “on” position during normal operation.

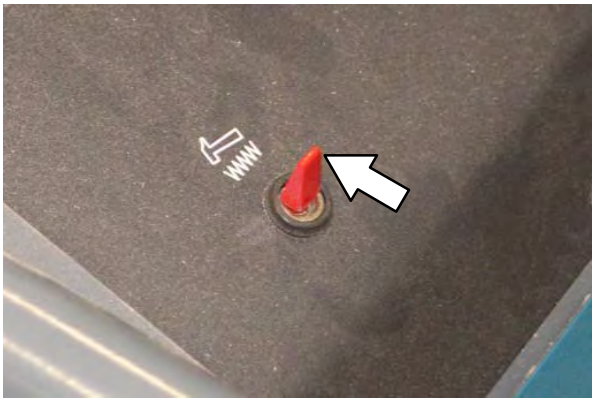

When the switch is in the “off” position, the filter shaker motor will not operate when the machine is turned off. The switch should be in the “off” position when servicing the machine.

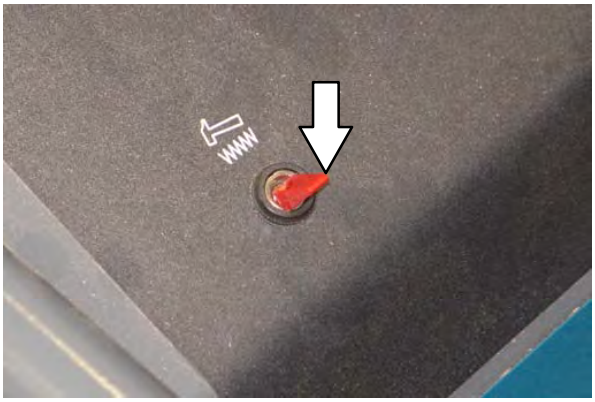

BATTERY CHARGE INDICATOR

The *battery discharge indicator* shows the charge level of the batteries.

When the batteries are fully charged, all seven lights are lit.

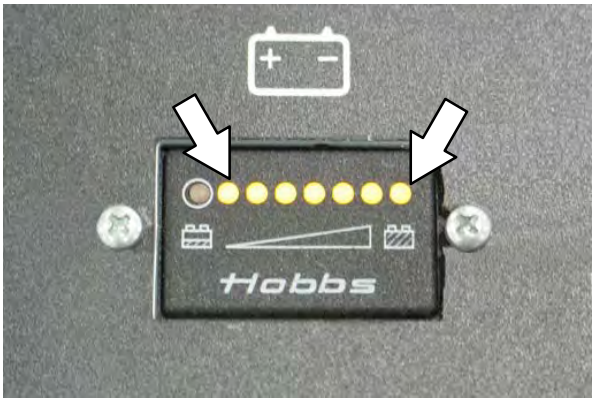

As the batteries discharge, the lights go out until only the left light is blinking. Sweeping functions will continue. Recharge the batteries when only the left light is blinking.

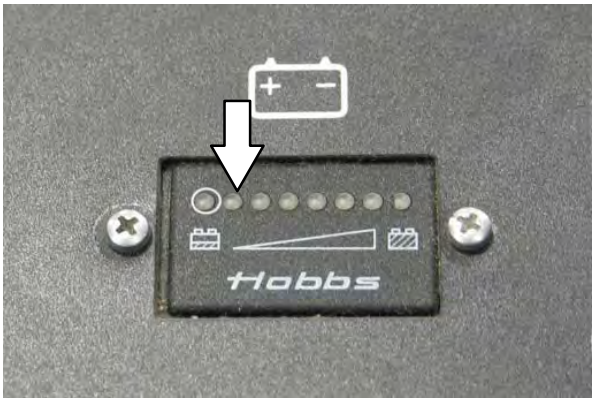

When the red light lights up, the machine will completely shut down.

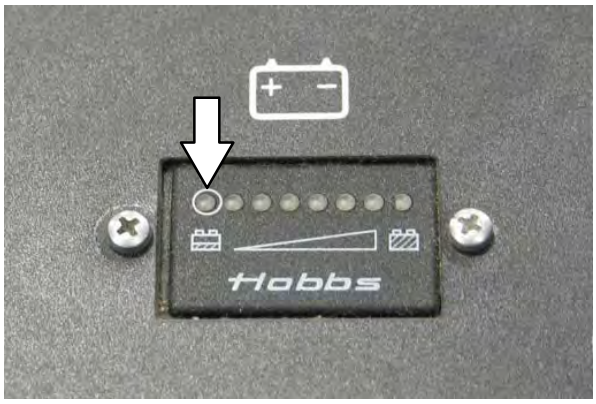

NOTE: Do not charge batteries more often than necessary. Excessive charging could reduce the life of the batteries. It is best to charge the batteries only when the left light indicates that the battery needs charging. See BATTERIES in the MAINTENANCE section.

NOTE: The blinking left battery discharge light will not reset from blinking until the batteries are fully charged.

BATTERY CHARGER PANEL

The battery charger panel shows the status of charging after the charger has been plugged into a wall outlet.

HOUR METER

The hour meter records the number of hours the machine has operated. This information is useful in determining when to service the machine.

MAIN BRUSH LEVER

The main brush lever controls the position of the main brush.

Main brush up position: Pull the lever up and lock the bottom notch of the lever into the Main Brush Up position.

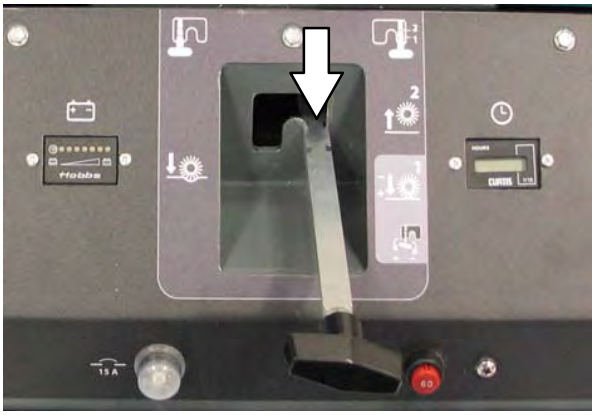

Main brush down position: (Smooth even floors) Push the lever forward and then pull it back and lock the top notch in the lever in the Main Brush Down position.

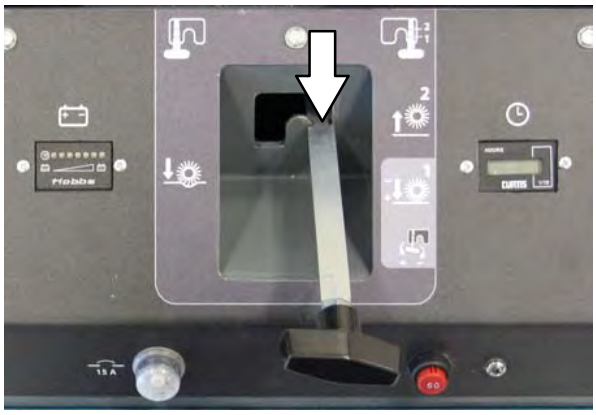

Main brush free−float position: (Uneven floors) Push the lever forward and then to the left and release it in the Main Brush Free-Float position.

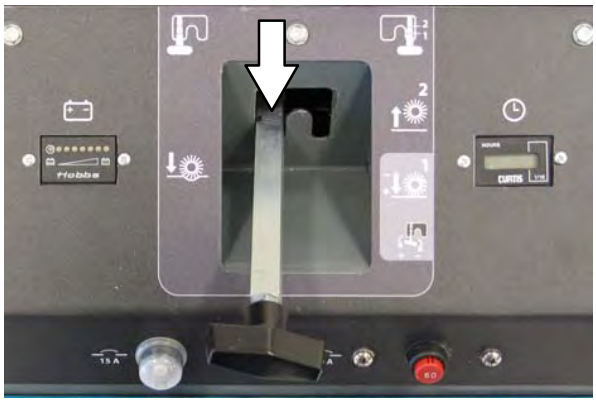

When parking the machine, always raise the brush to prevent the bristles from taking a set.

SIDE BRUSH ARM

The side brush arm controls the position of the side brush.

To raise the side brush, pull the lift arm up and push it back into the raised position. To lower the side brush, pull the arm forward and release it into the down position.

When parking the machine, always raise the brush to prevent the brush bristles from taking a set.

PARKING BRAKE LEVER

To set the parking brake, step on the lever and release it into the long notch on the left.

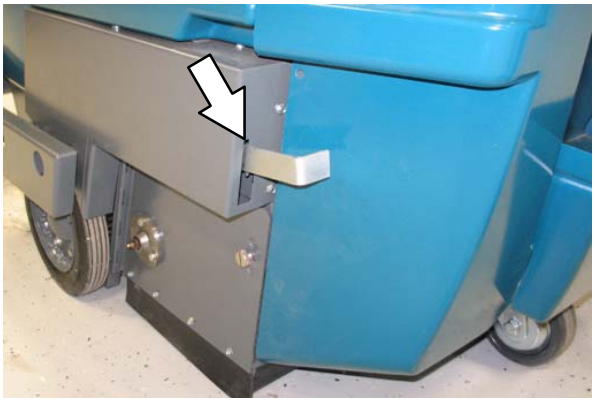

To release the parking brake, step on the lever and release it into the short notch on the right.

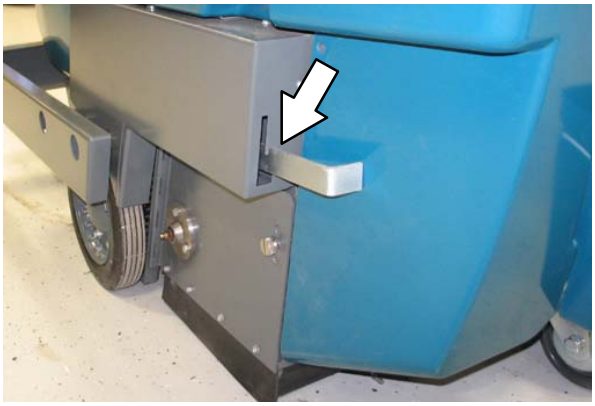

CIRCUIT BREAKERS AND FUSES

Circuit breakers are resettable electrical circuit protection devices that stop the flow of current in the event of a circuit overload. Once a circuit breaker has tripped, allow breaker to cool and then press the reset button to manually reset the breaker.

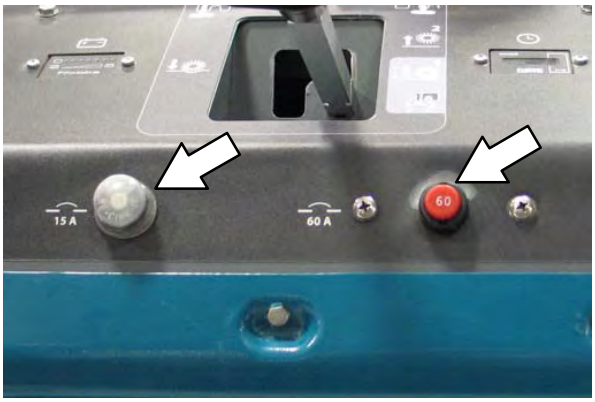

The *fuse* is a one-time protection device designed to stop the flow of current in the event of a circuit overload. The 15 A fuse is located behind the hopper on the main frame.

NOTE: Always replace the fuse with a fuse of the same type and amperage.

The following chart shows the various circuit breakers and fuses and the electrical components they protect.

PROTECTIVE DEVICE	RATING	CIRCUIT PROTECTED
CB−1	15 A	Shaker Motor
CB−2	60 A	Main Drive (Propel) Motor
FU−1	15 A	Control Power

BRUSH INFORMATION

For best results, use the correct brush type for the cleaning application. Listed below are the brushes and the applications for which each is best suited.

NOTE: *The amount and type of soilage play an important role in determining the type of brushes to use. Contact a Tennant representative for specific recommendations.*

Nylon 6-Double Row Main Brush − Recommended for general sweeping, and has good hopper loading. Nylon has the longest life of the bristle types. Use this brush for sweeping rough or irregular surfaces.

Polypropylene 6-Double Row Main Brush − Superior pick-up of sand, gravel, and paper litter. Polypropylene retains its stiffness when wet and can be used indoors or outdoors with equal performance. Not recommended for high-temperature debris.

Fiber and Wire 6-Row Main Brush − Offers good sweeping action and pickup in heavy dust concentrations. This brush is recommended where soilage is slightly encrusted. The brush is not recommended for heavy buildup or hard packed soilage.

Natural Fiber 18−Row Main Brush − The natural choice for cleaning fine debris on carpet and sweeping very heavy dust and other fine particles on hard surfaces.

MACHINE OPERATION

PRE−OPERATION CHECKLIST

- ❑ Check the battery charge level.
- ❑ Check the hopper lip skirt for damage and wear.
- ❑ Check the hopper seal for damage and wear.
- ❑ Check the dust filter for damage.
- ❑ Check the condition of the main brush. Remove any string, banding, plastic wrap, or other debris wrapped around the brush.
- ❑ Check the main brush and rear brush skirts for damage, wear, and clearance.
- ❑ Side Brush Option: Check the condition of the side brush. Remove any string, banding, plastic wrap, or other debris wrapped around the brush.
- ❑ Check the service records to determine maintenance requirements.

OPERATION ON GRADES

Drive the machine slowly on grades. The maximum rated climb angle is 7° or 12.2%.

FOR SAFETY: When Using Machine; Go Slow On Grades And Slippery Surfaces.

SWEEPING

Plan the sweeping in advance. Try to arrange long runs with minimum stopping and starting. Overlap brush paths. Sweep as straight a path as possible. Avoid bumping into posts or scraping the sides of the sweeper. Sweep debris from very narrow aisles into main aisles ahead of time. Do an entire floor or section at one time.

Pick up oversize debris before sweeping. Pick up pieces of wire, twine, or string, which could become entangled in brush or brush plugs.

1. Turn the on−off switch key to the on position.

2. Release the machine parking brake, if equipped.
3. Move the main brush lever into the (Main Brush Down) or (Main Brush Free-Float) position.
4. Move the side brush arm into the down position.
5. Sweep as required.
6. Raise the main brush and side brush.

7. Turn the on-off switch key to the left. Remove the key from the on-off switch.

FOR SAFETY: Before leaving or servicing machine; stop on level surface, set parking brake, and turn off machine.

EMPTYING THE HOPPER

1. Pull the main brush lever into the (Main Brush Up) position.

2. Pull the side brush arm into the raised position.

3. Slowly drive the machine up to the dump site. Turn off the machine. The filter will operate for approximately 20 seconds.

NOTE: The filter shaker override switch must be in the “on” position to automatically shake the dust filter when the machine is turned off.

FOR SAFETY: Before leaving or servicing machine; stop on level surface, set parking brake, and turn off machine.

4. Lift the filter cover.

5. Swing the dump lever (B) under the hook (C); Lift the dump lever to dump the hopper (A).

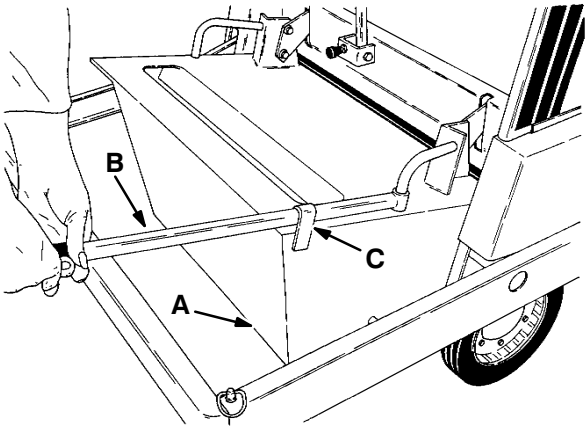

A. Hopper
B. Dump Lever
C. Lever Hook

6. Engage the lever hook (not shown) to keep the hopper in the “dump” position.

7. Slowly back the machine away from the dump site or remove the hopper from the machine to empty the contents from the hopper.

NOTE:See REMOVING THE HOPPER in the following section if it is necessary to remove the hopper from the machine to empty the hopper.

8. Release the lever hook (not shown), lower the hopper, and return the dump lever to its storage location.

9. Lower the filter cover.

REMOVING THE HOPPER

1. Pull the main brush lever into the (Main Brush Up) position.

2. Pull the side brush arm into the raised position.

3. Turn off the machine. The filter will operate for approximately 20 seconds.

NOTE: The filter shaker override switch must be in the “on” position to automatically shake the dust filter when the machine is turned off.

FOR SAFETY: Before leaving or servicing machine; stop on level surface, set parking brake, and turn off machine.

4. Lift the filter cover.

5. Seek assistance to remove the hopper from the machine. Lift the hopper out of the machine.

WARNING: Heavy hopper. Do not remove without help. Can cause back strain.

6. Reinstall the hopper into the machine. Make sure the hooks on hopper are completely installed onto the machine.

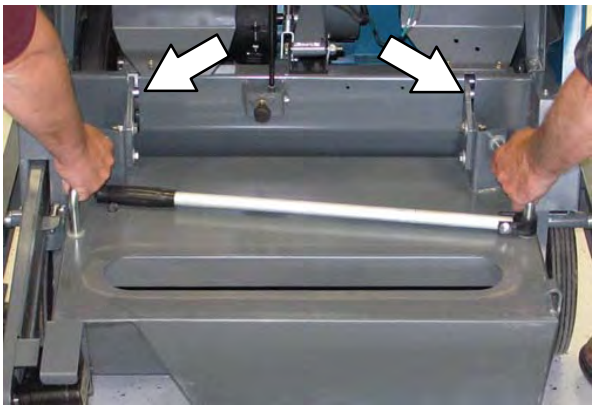

7. Close the filter cover.

MACHINE TROUBLESHOOTING

Problem	Cause	Remedy
Excessive dusting	Dust skirts and seals worn, damaged, not adjusted properly	Replace or adjust skirts or seals
	Dust filter clogged	Shake and/or clean or replace filter
	Vacuum hose damaged	Replace vacuum hose
	Vacuum fan belt slipping or broken	Adjust or replace belt
Poor sweeping performance	Brush bristles worn	Replace brushes
	Brushes not adjusted properly	Adjust brushes
	Brushes not installed properly	Reinstall brushes
	Debris caught in brush drive mechanism	Free mechanism of debris
	Hopper not adjusted properly	Adjust hopper floor clearance
	Hopper full	Empty hopper
	Hopper floor skirts worn, damaged	Replace skirts
	Brush belt slipping, or broken	Replace belt
Battery charger not operating	Charger not plugged into electrical receptacle	Plug charger into electrical receptacle
	Charger cord not completely plugged into bottom of charger	Replug charger cord into charger
	Charger cord is damaged	Replace charger cord

MAINTENANCE

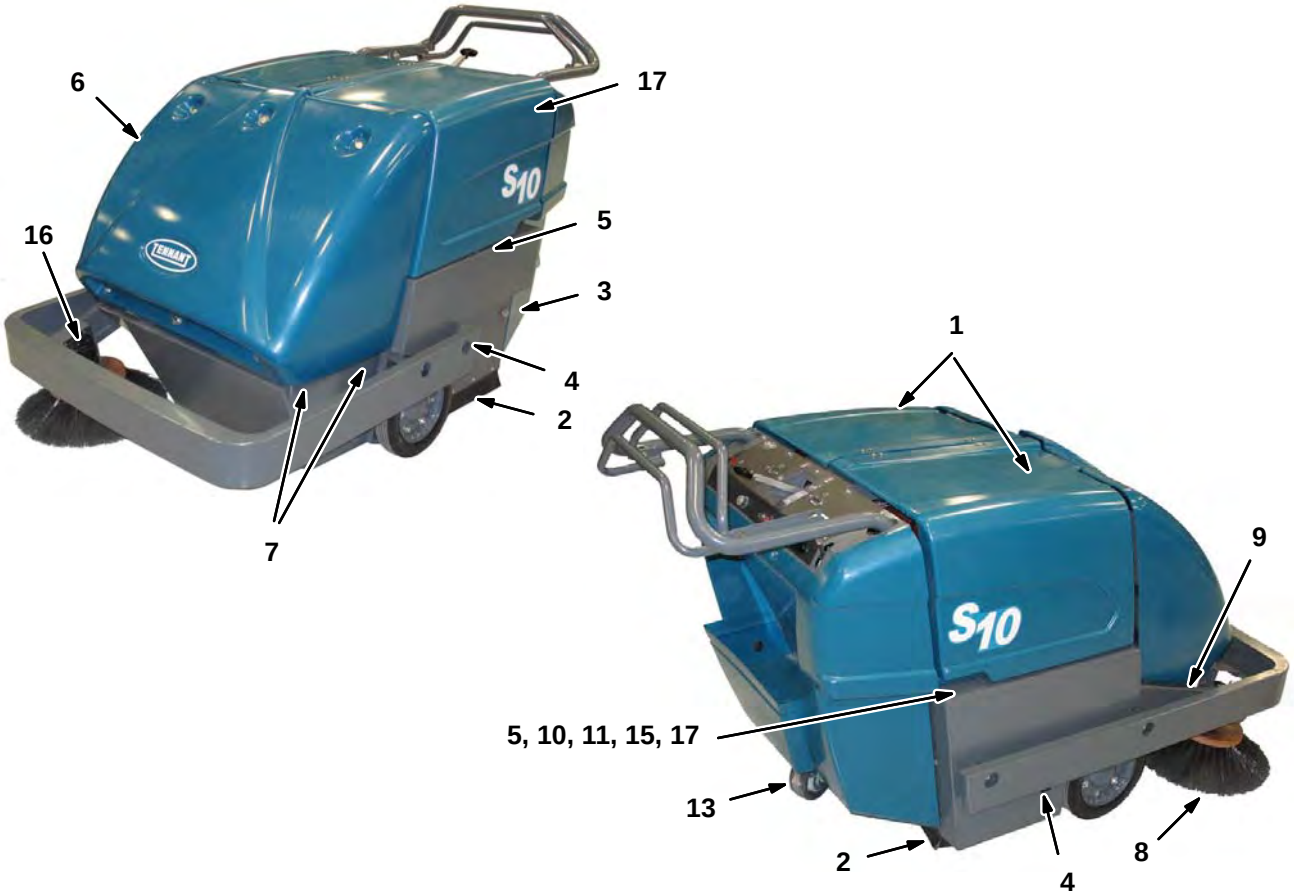

MAINTENANCE CHART

Interval	Key	Description	Procedure	Lubricant/ Fluid	No. of Service Points
Daily	2	Brush skirts	Check for damage, wear, and floor clearance	–	5
	3	Main brush	Check for damage, wear, debris	–	1
	8	Side brush	Check for damage, wear, debris	–	1
	7	Hopper	Check seals for damage and wear	–	3
25 Hours	1	Battery cells	Check electrolyte level	DW	2
	3	Main brush	Check floor pattern **(after initial 25 hours only)**	–	1
	5	Drive chains	Check and adjust tension **(after initial 25 hours only)**	–	2

Interval	Key	Description	Procedure	Lubricant/ Fluid	No. of Service Points
50 Hours	14	Vacuum fan belt	Check tension and wear	−	1
	10	Propelling belts	Check tension and wear	−	2
	10	Main brush belts	Check tension and wear	−	2
	9	Side brush belts	Check tension and wear	−	2
	8	Side brush	Check pressure	−	1
	3	Main brush	Check floor pattern Rotate end−for−end	−	1
	4	Brush arm pivots	Lubricate	SPL	2
	13	Rear caster	Lubricate	SPL	1
	7	Hopper	Check floor clearance	−	1
	17	Battery charger cable	Check for wear and damage	−	1
100 Hours	5	Drive chains	Check and adjust tension	−	2
			Lubricate	SO	2
	6	Dust filter	Clean or replace	−	1
	11	Self adjusting sheave	Lubricate	SPL	1
	1	Batteries	Clean top surface and terminals	−	2
	17	Differential	Lubricate	SPL	1
400 Hours	15	Propelling motor	Blow out dust and inspect	−	1
	16	Side brush gear box	Check lubricant level	GL	1

LUBRICANT/FLUID

DW − Distilled water
SPL − Special lubricant, Lubriplate EMB grease, TENNANT Part No. 01433−1
SO − Spray lubricant
GL − SAE 90 Weight gear lubricant

NOTE: More frequent intervals may be required in extremely dusty conditions.

LUBRICATION

DRIVE CHAINS

Check the tension and lubricate the drive chains (A) with a penetrating-type spray lubricant after every 100 hours of operation.

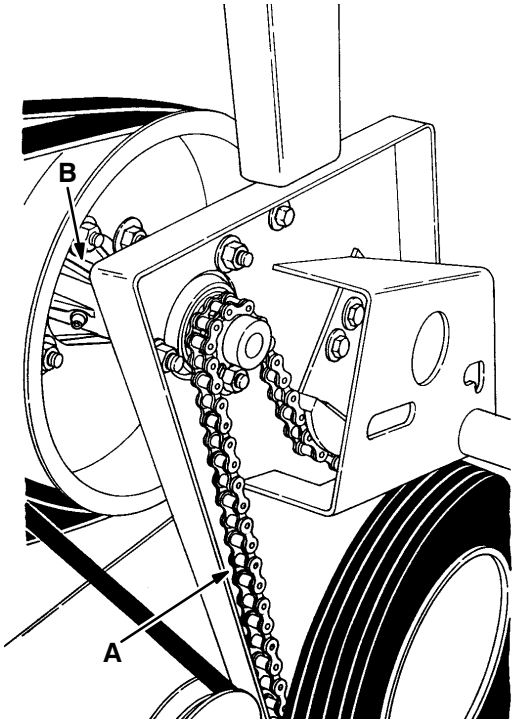

03139

A. Drive Chain
B. Differential

DIFFERENTIAL

Lubricate the differential (B) every 100 hours of operation. The differential grease fitting is located on the drive shaft inside the drive sheave.

BRUSH ARM PIVOTS

Lubricate the brush arm pivots after every 50 hours of operation.

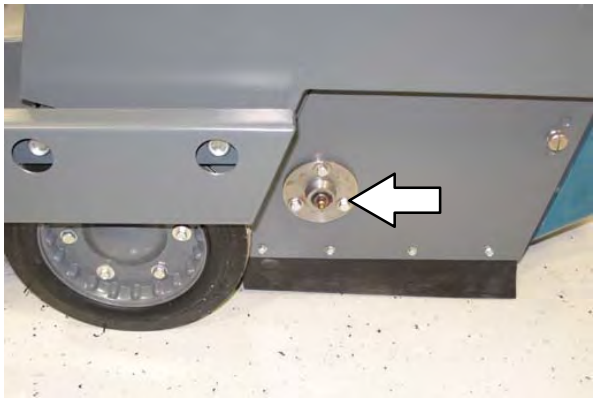

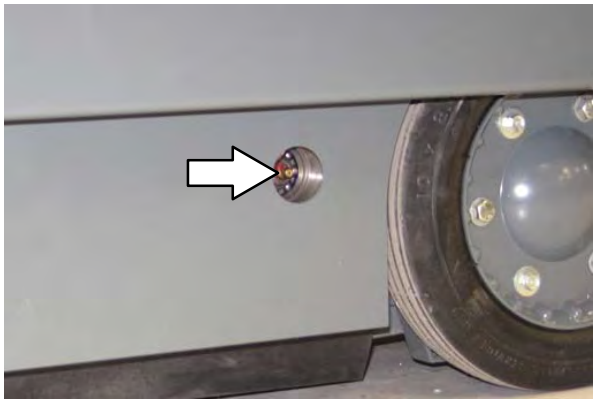

REAR CASTER

Lubricate the rear caster after every 50 hours of operation.

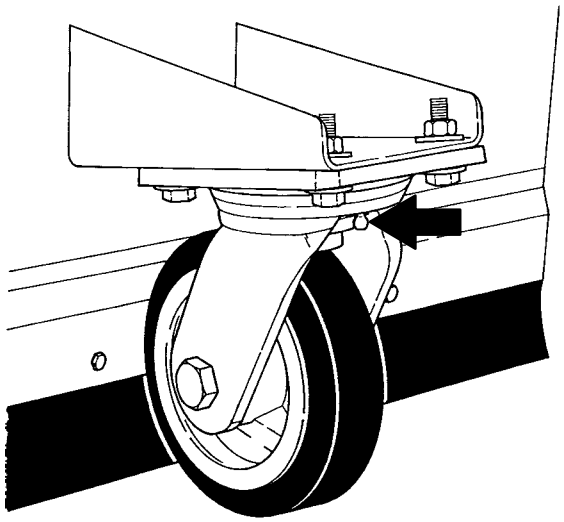

SIDE BRUSH GEAR BOX

Check the side brush gear box fluid level after every 400 hours of operation. Remove the breather by unscrewing it with a wrench. Fill the gear box to within 0.25 in (6 mm) of the top.

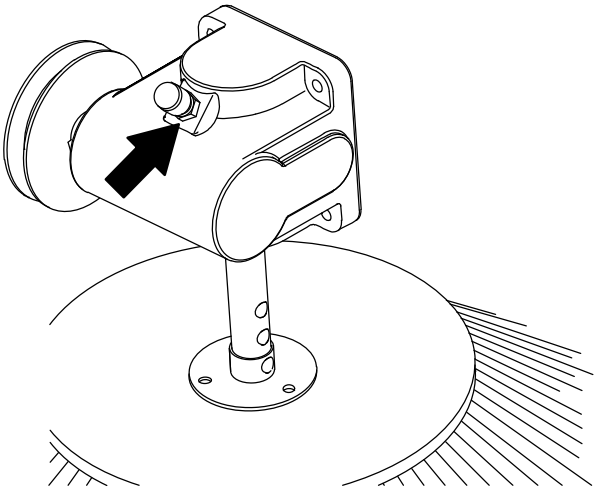

SELF ADJUSTING SHEAVE

Lubricate the sheave shaft after every 100 hours of operation. Avoid getting oil on the belt or sheave surfaces.

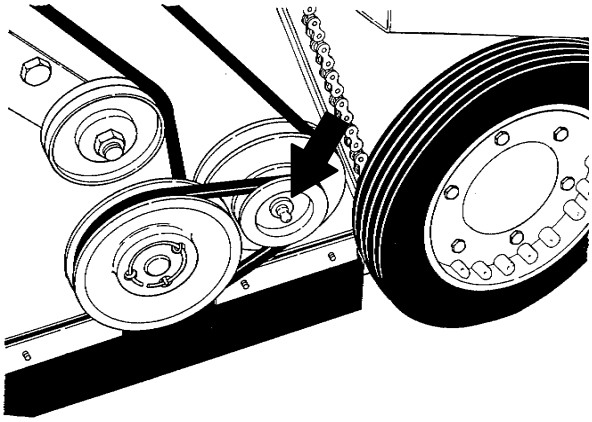

03141

BATTERIES

FOR SAFETY: Before leaving or servicing machine, stop on level surface, turn off machine, set parking brake (if equipped), and remove key.

The lifetime of the batteries depends on their proper maintenance. To get the most life from the batteries;

- Do not charge the batteries more than once a day and only after running the machine for a minimum of 15 minutes.
- Do not leave the batteries partially discharged for long period of time.
- Only charge the batteries in a well-ventilated area to prevent gas build up. Charge batteries in areas with ambient temperatures 27°C (80°F) or less.
- Allow the charger to complete charging the batteries before re-using the machine.
- Maintain the proper electrolyte levels of flooded (wet) batteries by checking levels weekly.

CHECKING THE ELECTROLYTE LEVEL

The flooded (wet) lead−acid batteries require routine maintenance as described below. Check the battery electrolyte level weekly.

*NOTE: **Do Not** check the electrolyte level if the machine is equipped with the battery watering system. Proceed to the BATTERY WATERING SYSTEM (OPTION).*

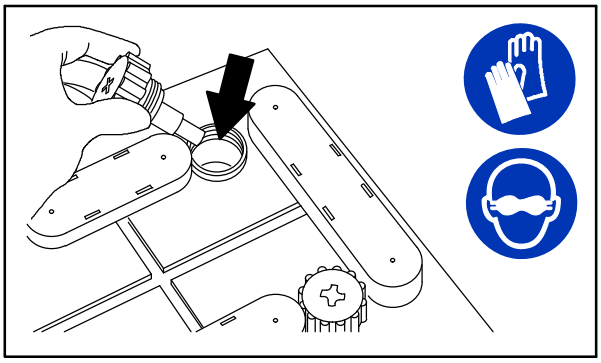

08247

FOR SAFETY: When servicing machine, keep all metal objects off batteries. Avoid contact with battery acid.

The level should be slightly above the battery plates as shown before charging. Add distilled water if low. DO NOT OVERFILL. The electrolyte will expand and may overflow when charging. After charging, distilled water can be added up to about 3 mm (0.12 in) below the sight tubes.

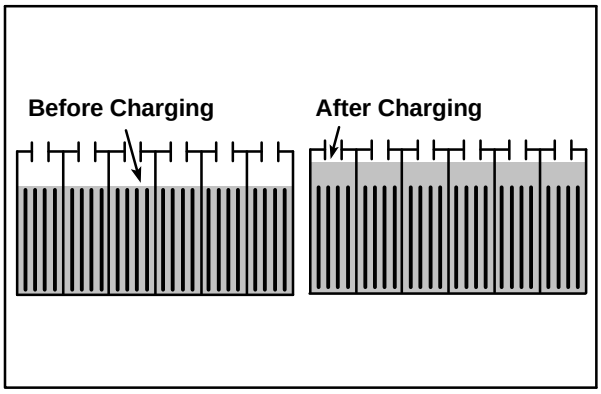

NOTE: Make sure the battery caps are in place while charging. There may be a sulfur smell after charging batteries. This is normal.

MAINTENANCE−FREE BATTERIES

Maintenance−free batteries do not require watering. Cleaning and other routine maintenance is still required.

CHECKING CONNECTIONS / CLEANING

After every 200 hours of use check for loose battery connections and clean the surface of the batteries, including terminals and cable clamps, with a strong solution of baking soda and water. Replace any worn or damaged wires. Do not remove battery caps when cleaning batteries.

CHARGING BATTERIES

The following charging instructions are intended for battery chargers supplied with the machine.

After every 50 hours check the battery charger cord for damage.

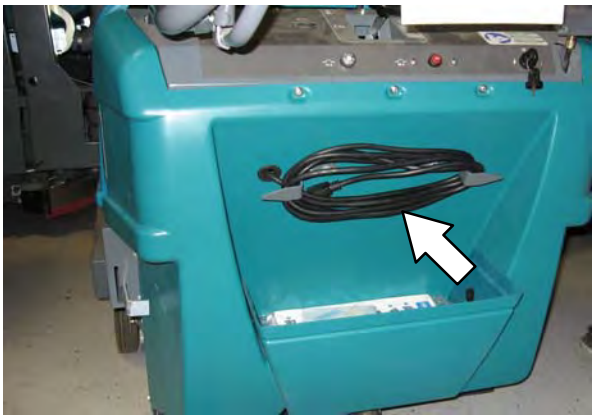

To prolong the life of the batteries only recharge the batteries if the machine was used for a total of 30 minutes or more. Do not leave batteries discharged for lengthy periods.

WARNING: Fire Or Explosion Hazard. Batteries emit hydrogen gas. Keep sparks and open flame away. Keep battery compartment open when charging.

FOR SAFETY: When servicing batteries, wear protective gloves and eye protection when handling batteries and battery cables. Avoid contact with battery acid.

Make sure the charger profile is properly set for the battery type before charging. Failure to properly set profile will result in battery damage. To determine the battery type, see battery label. Contact the battery supplier if not specified.

To verify the charger profile setting, connect the charger cord into an electrical receptacle. If the LED labeled “GEL” is on, the charger is set for Gel (sealed) batteries. If the LED is off, the charger is set for Wet/lead acid (flooded) batteries.

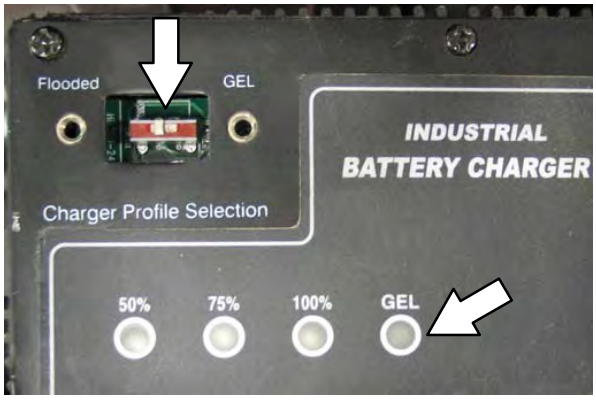

To change the charger profile, unplug the charger, remove the “Charger Profile Selection” panel, and position the switch towards the proper setting, “GEL” or “Flooded” .

1. Transport the machine to a well−ventilated area for charging.

FOR SAFETY: Before leaving or servicing machine; stop on level surface, set parking brake, and turn off machine.

2. If charging wet (lead acid) batteries check the fluid level before charging (See BATTERY MAINTENANCE).

3. Remove the battery compartment covers for ventilation when charging.

4. Connect the charger cord into a properly grounded electrical receptacle. The charger will start automatically within a few seconds. The LEDs will display the charging state as described in the following table.

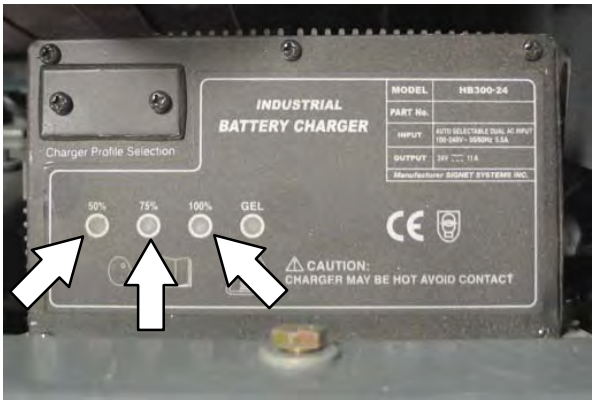

CHARGING STATE LED DISPLAY			
Charging State	**50% LED**	**75% LED**	**100% LED**
0−50% charged	Blinking	Off	Off
50−75% charged	On	Blinking	Off
75−100% charged	On	On	Blinking
100% charged	On	On	On
Abnormal Cycle*	Off	Off	Blinking
Fault detected *	Blinking	Blinking	Blinking

* See the On−board Battery Charger Fault Codes table. When a fault occurs, the charger will also sound an alarm.

NOTE: The machine will not operate once the battery charger is connected.

5. Once the batteries are fully charged, the charger will stop suppling power, but will continue to monitor the battery voltage. The charger will restart if the batteries self−discharge.

NOTE: The charger may take up to 30 seconds to turn off once the charger cord is disconnected. During this time, the machine will not power up. The charger cord must also be disconnected for 30 seconds before the charger can be restarted.

6. Unplug the charger cord.

NOTE: To avoid damaging the charger cord, do not pull on the cord to unplug the charger from the electrical receptacle. Use the plug to unplug the cord from the electrical receptacle.

7. Reinstall the battery compartment covers.

LED FAULT CODE	FAULT	SOLUTION
3 LEDs blink once repeatedly	Loose charger cable connection.	Check charger cable connection.
	Loose or damaged battery cable.	Check battery cable connections.
	Defective Battery.	Replace battery.
3 LEDs blink twice repeatedly	Input voltage is out of range.	Try using a different wall outlet.
3 LEDs blink three times repeatedly	Safety thermostat exceeded maximum internal temperature.	Open battery compartment to promote air circulation or move machine to a cooler climate.
3 LEDs blink four times repeatedly	Output current exceeds a limit.	Disconnect charger cord, wait 30 seconds, then plug back in. If fault continues replace charger or contact TENNANT Service.
100% LED blinks while the 50% and 75% LEDs are off.	Abnormal cycle. Safety timer exceeded the 18 hour charging time.	Battery maintenance required or replace battery.

ELECTRIC MOTORS

The electric propelling motor is serviceable. The propelling motor is located underneath the battery compartment.

Blow out the dust and inspect the motor brushes in the motor after every 400 hours of operation.

If the brushes have been worn to less than 10 mm (0.38 in) in length, replace them.

If the commutator is worn or rough, the motor armature should be removed and serviced, or replaced.

BELTS AND CHAINS

PROPELLING BELTS

Check the propelling belts for wear and tension after every 50 hours of operation.

CHECKING AND ADJUSTING THE PROPELLING BELT TENSION

FOR SAFETY: Before leaving or servicing machine; stop on level surface, set parking brake, and turn off machine.

1. Remove the access cover, bumper, and cover.

2. Observe the position of the clutch plate bolt (C) with no pressure on the clutch handle. It should be approximately in the center of the slot (D).

3. Press the clutch handle to tighten the forward propelling belt (G). The clutch handle should be 7 to 13 mm (0.25 to 0.50 in) from the stationary handle. Observe the position of the clutch plate bolt (C). It should not touch the end of the slot (D). If the handle and bolt are in the proper position, proceed to step 7; if not, continue with step 4 to readjust forward belt tension.

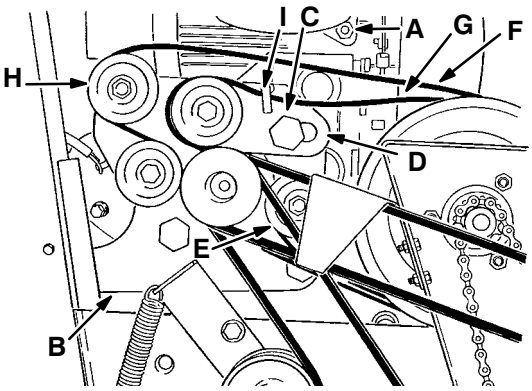

03151

A. Motor
B. Clutch Plate
C. Clutch Plate Bolt
D. Bolt Slot
E. Forward Belt Idler Sheave
F. Reverse Propelling Belt
G. Forward Propelling Belt
H. Reverse Belt Idler Sheave
I. Belt Guide

4. Loosen the forward idler sheave bolt (E) and slide the idler sheave down to tighten the belt (G) (this also increases distance between clutch handle and stationary handle); slide the sheave up to loosen the belt (this also reduces distance between clutch handle and stationary handle).

5. Tighten the idler sheave bolt.

6. Recheck handle and bolt positions. Repeat as necessary to adjust belt tension.

NOTE: After adjusting the forward belt, it may contact the belt guide when engaged causing a whining noise. To stop the noise, bend the guide up out of the belt's way.

7. Pull the clutch handle to tighten the reverse propelling belt. Observe the position of the clutch plate bolt (C). It should not touch the end of the slot (D). If the bolt is in the proper position, proceed to step 11; if not, continue with step 8 to readjust reverse belt tension.

NOTE: If the reverse belt is too tight, it will require excessive clutch handle pressure to propel machine in the forward direction. It may also cause the machine to creep backward when the handle is released. If the reverse belt is too loose, the machine will not propel backward.

8. Loosen the reverse idler sheave bolt (H) and slide the idler sheave to the rear to tighten the belt (F); slide the sheave forward to loosen the belt.

9. Tighten the reverse idler sheave bolt (H).

10. Pull the clutch handle to recheck the position of the clutch plate bolt (C). Repeat as necessary to adjust belt tension.

11. Reinstall the access cover, and right side cover, and bumper.

SIDE BRUSH BELT

Check the belt for wear and tension after every 50 hours of operation.

CHECKING AND ADJUSTING THE SIDE BRUSH BELT TENSION

FOR SAFETY: Before leaving or servicing machine; stop on level surface, set parking brake, and turn off machine.

1. Lift the filter cover.

2. Remove the debris hopper.

3. Remove the access cover, and right side bumper and cover.

4. Place the side brush arm in the down position.

5. Check the belt (A) tension at a point 230 mm (9 in) from the motor shaft. The belt should deflect 20 mm (0.75 in) from a force of 3 kg (6 lb).

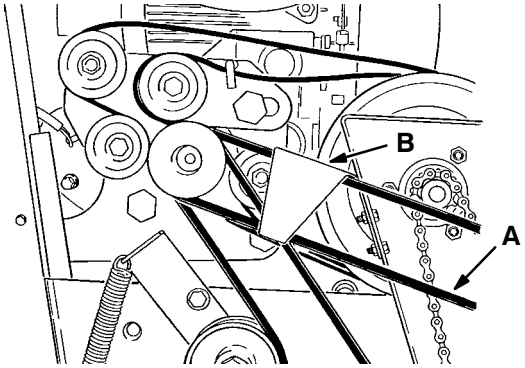

03151

A. Side Brush Belt
B. Belt Guide

6. To adjust belt tension, loosen the button head screw through the side cover (not shown).

7. Pull the side brush arm (A) out to tighten the belt.

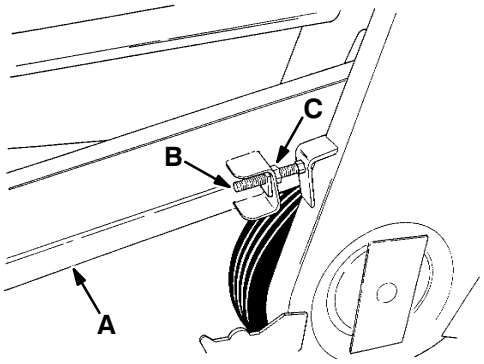

03153

A. Side Brush Arm
B. Stop Bolt
C. Lock Nut

8. Tighten the button head screw when the correct tension is reached.

9. Adjust the stop bolt (B) so it clears the stop by 5 mm (0.06 in).

10. Replace the debris hopper.

11. Lower the filter cover.

MAIN BRUSH BELTS

Check the main brush belts for wear after every 50 hours of operation.

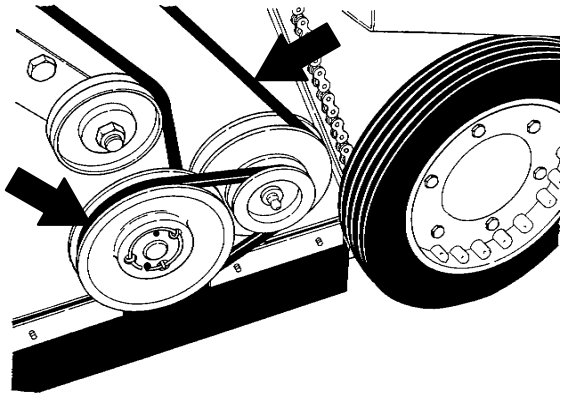

03141

VACUUM FAN BELT

Check the vacuum fan belt for wear and tension after every 50 hours of operation.

CHECKING AND ADJUSTING THE VACUUM FAN BELT TENSION

FOR SAFETY: Before leaving or servicing machine; stop on level surface, set parking brake, and turn off machine.

1. Remove the rear panel.

2. Check belt deflection by applying a force of 3 kg (6 lb) to the midpoint of the belt span. The belt should deflect 5 mm (0.06 in).

3. To adjust belt tension, loosen the belt adjusting stud nut (B). Pull the vacuum fan assembly (A) up to tighten the belt and tighten the stud nut.

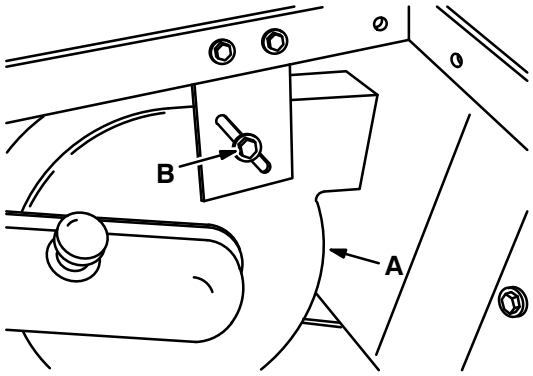

06320

A. Vacuum Fan
B. Stud Nut

4. Tighten all nuts and recheck belt tension.

5. Replace the rear panel.

WHEEL DRIVE CHAINS

Check the chains for wear or damage and tension after the first 50 hours of operation and then after every 100 hours of operation. The wheel drive chains should have 10 mm (0.40 in) slack measured midway between the sprockets.

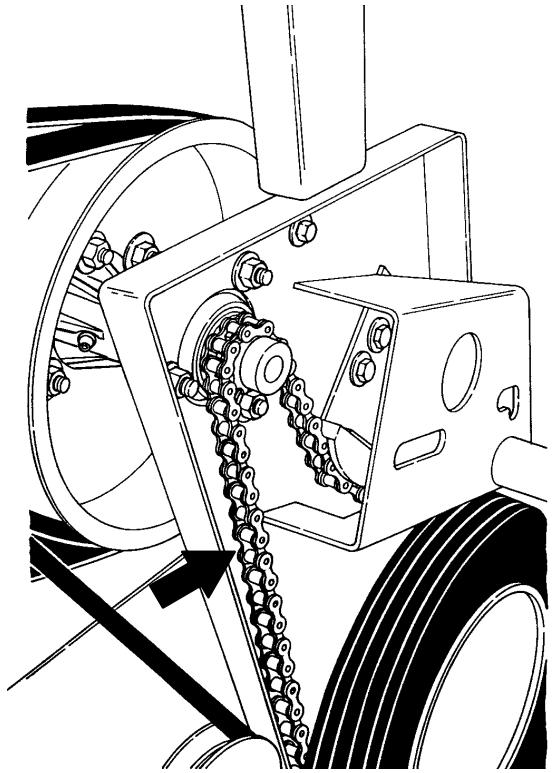

03139

STATIC DRAG CHAIN

A static drag chain prevents the buildup of static electricity in the machine. Check the chain for wear periodically. Make sure the chain touches the floor at all times.

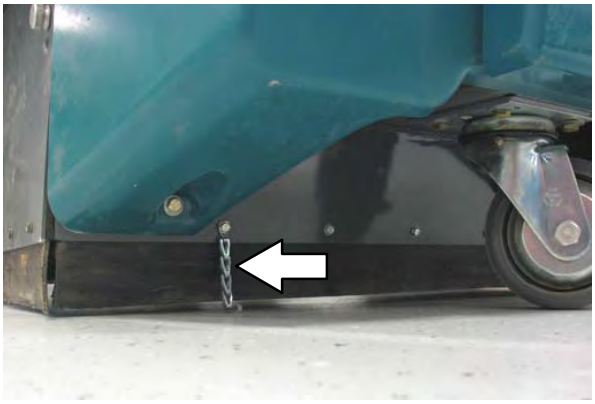

BRUSHES

MAIN BRUSH

Inspect the main brush daily for wear or damage. Remove any string or wire tangled on the main brush, the main brush drive hub, or the main brush idler hub.

Rotate the main brush end-for-end after every 50 hours of operation to obtain maximum brush life. The main brush should be replaced when the remaining bristle measures 15 mm (0.5 in).

The main brush pattern should be checked after every 50 hours of operation. The main brush pattern should be 40 mm (1.5 in) wide.

REMOVING THE MAIN BRUSH

FOR SAFETY: Before leaving or servicing machine; stop on level surface, set parking brake, and turn off machine.

1. Place the main brush lift handle in the (Main Brush Free-Float) position.
2. Open the main brush access door (D).
3. Pull the brush out of the brush compartment.

INSTALLING THE MAIN BRUSH

NOTE: The hopper can be removed to aid installing the main brush into the machine. See REMOVING THE HOPPER in the OPERATION section for proper procedure for removing the hopper.

1. Slide the brush into the brush compartment.
2. Rotate the brush until the slots on the ends of the brush engage the keys on the main brush drive hub (not shown).

NOTE: Do not force the main brush onto the drive hub. When the main brush slots and drive hub keys are properly aligned, the main brush will easily engage the drive hub.

3. Close and secure the main brush access door (D). **Make sure the lift arm (B) engages the idler lift arm pins (A).**

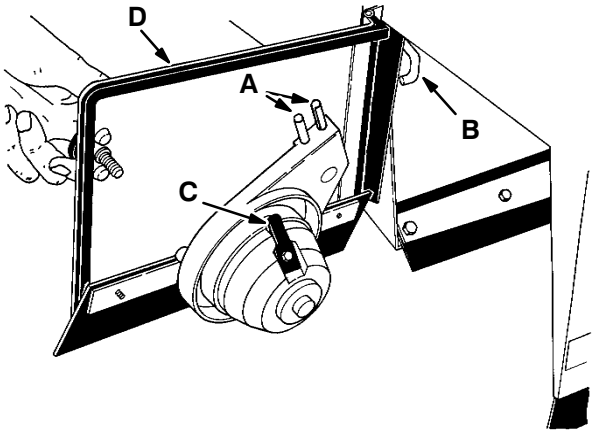

02347

A. Lift Arm Pins
B. Lift Arm
C. Idler Key
D. Access Door

4. Check and adjust main brush pattern as described in *CHECKING AND ADJUSTING THE MAIN BRUSH PATTERN.*

CHECKING AND ADJUSTING THE MAIN BRUSH PATTERN

1. Apply chalk or some material that will not blow away easily, to a smooth, level surface.

2. Start the motor.

3. With side brush and main brush raised, position main brush over the chalked area.

4. While holding the machine in place, move the main brush lift handle in the (Main Brush Down) position. Let the brush remain on the floor for 15 to 20 seconds.

5. Place the main brush lift handle in the (Main Brush Up) position.

6. Move the machine from the main brush polish mark.

7. Stop the motor.

8. Observe the width of the polish mark. The proper polish width is 40 mm (1.5 in).

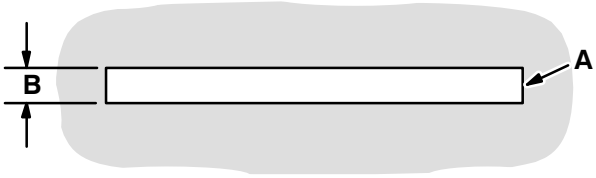

00582

A. Main Brush Pattern
B. Polish Width

9. Adjust the main brush width as necessary.

   To reduce the polish width, turn the main brush lift handle to the right.

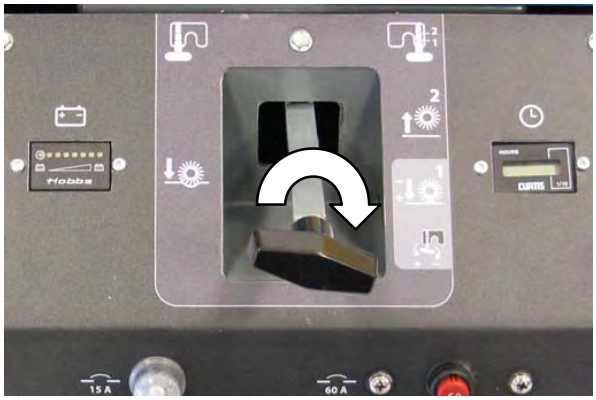

   To widen the polish width, turn the main brush lift handle to the left.

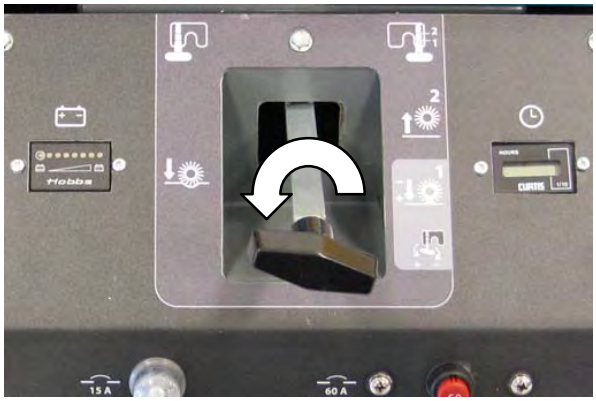

If any adjustments are made, recheck the main brush pattern before operating the machine.

SIDE BRUSH

The side brush should be inspected daily for wear or damage. Remove any string or wire tangled from the side brush, side brush drive hub, or shaft. The side brush should be replaced when the remaining bristle length measures 25 mm (1 in) in length.

The side brush should be checked after every 50 hours of operation. The side brush is properly adjusted when, with the side brush arm in the raised position, there is approximately 25 mm (1 in) between the floor and the side brush bristles.

REMOVING THE SIDE BRUSH

FOR SAFETY: Before leaving or servicing machine; stop on level surface, set parking brake, and turn off machine.

1. Pull the side brush arm up into the raised position.
2. Remove the side brush mounting hardware (B).

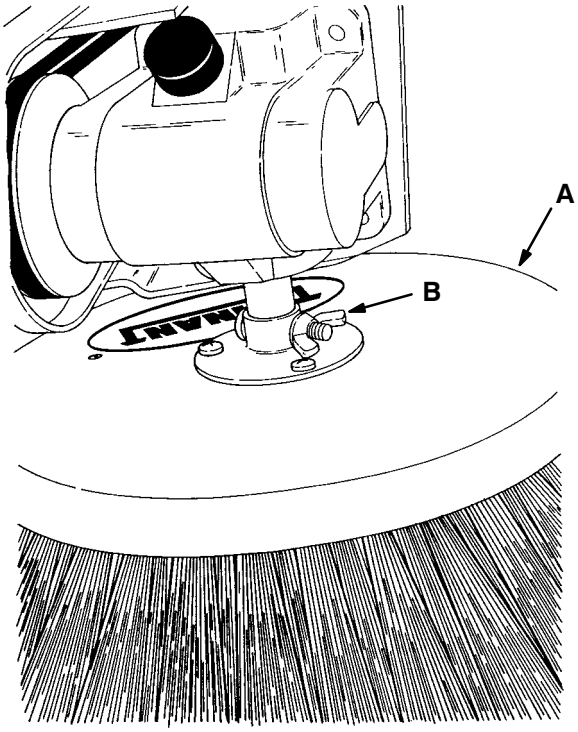

A. Side Brush
B. Mounting Hardware

3. Slide the side brush (A) off the drive shaft.

IINSTALLING THE SIDE BRUSH

1. Slide the side brush (A) onto the drive shaft.
2. Secure the side brush (A) with the mounting hardware (B).
3. Check the side brush adjustment as described in *ADJUSTING THE SIDE BRUSH.*

ADJUSTING THE SIDE BRUSH

FOR SAFETY: Before leaving or servicing machine; stop on level surface, set parking brake, and turn off machine.

1. Pull the side brush arm up into the raised position.
2. Remove the side brush mounting hardware.
3. Position the side brush on the shaft until there is approximately 25 mm (1 in) between the floor and the brush bristles.

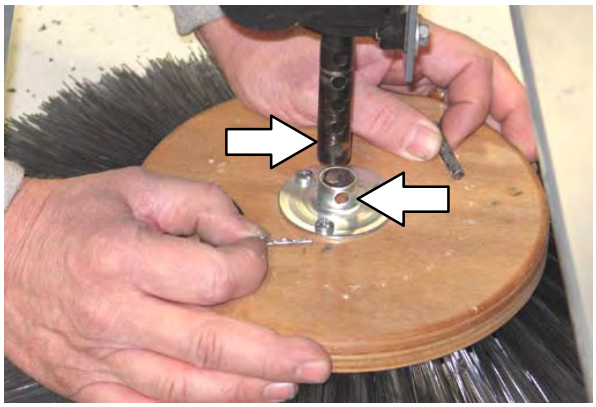

4. Align the side brush with the drive shaft holes.
5. Secure the side brush to the drive shaft with the mounting hardware.

NOTE: It may be necessary to readjust the side brush drive belt tension after adjusting the side brush height.

DEBRIS HOPPER AND DUST FILTER

DEBRIS HOPPER

The debris hopper should be emptied after every work shift, or when the hopper is full. The debris hopper floor clearance should be checked after every 50 hours of operation. The dust filter to hopper seal can also be adjusted to prevent dusting when shaking the dust filter.

CHECKING AND ADJUSTING THE HOPPER FLOOR CLEARANCE

FOR SAFETY: Before leaving or servicing machine; stop on level surface, set parking brake, and turn off machine.

1. Empty the debris hopper and replace it on the machine.
2. The bottom rear metal edge of the hopper should clear the floor by 15 mm (0.5 in). Also, be sure the hopper is level side to side.
3. To adjust the hopper (A), loosen the hanger bracket bolts (B), reposition the hanger bracket, and retighten the hanger bracket bolts. Be sure the hopper brackets do not rub against the pivot pins preventing the hopper from floating.

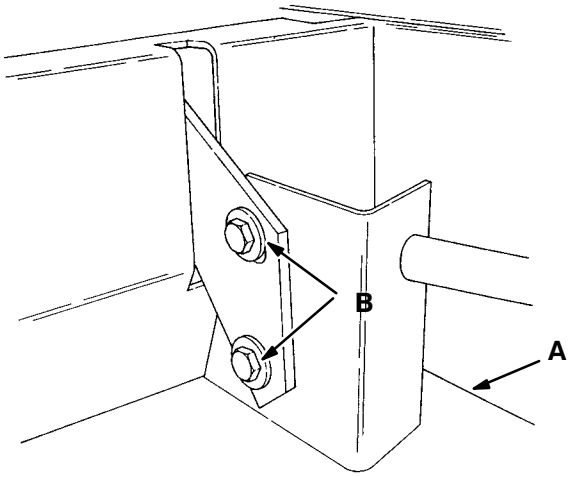

03159

A. Hopper
B. Hanger Bracket Bolts

ADJUSTING THE DUST FILTER TO HOPPER SEALING

FOR SAFETY: Before leaving or servicing machine; stop on level surface, set parking brake, and turn off machine.

1. Lift the filter assembly.
2. Make sure stop bolt (A) is touching the filter assembly. If it is, continue with step 3. If it is not, loosen bolts and adjust the round vacuum fan seal bracket (C) back to allow the assembly to touch the stop bolt. Secure the vacuum fan seal bracket.

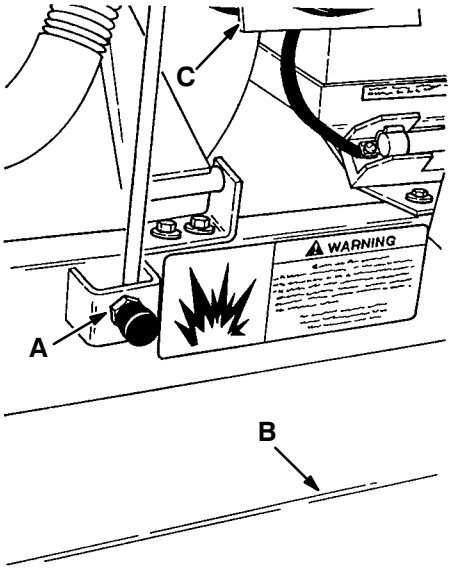

03541

A. Stop Bolt
B. Hopper
C. Vacuum Fan Seal Bracket

3. Turn the filter stop bolt (A) clockwise a half turn.
4. Close the filter assembly and check the clearance between the filter cover, the hopper, and the vacuum fan seal. This can be done by placing a strip of paper between the filter cover and the hopper. When correctly adjusted, the paper will be difficult to pull out. The seal pressure should allow the hopper to float. Push the hopper down to check − it should be able to go down and return to its original position.

THERMO-SENTRY

The Thermo−Sentry, located inside the hopper, senses the temperature of the air pulled up from the hopper. If there is a fire in the hopper, the Thermo−Sentry stops the vacuum fan and cuts off the air flow. Press the button to reset the Thermo−Sentry.

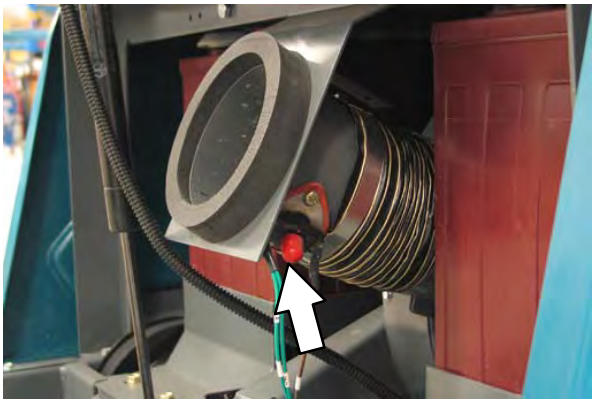

DUST FILTER

The dust filter is located inside the dust filter compartment. The filter shaker will shake the filter for 20 seconds when the machine is powered off. Inspect and clean or replace the dust filter after every 100 hours of operation.

NOTE: The filter shaker override switch must be in the “on” position to automatically shake the dust filter when the machine is turned off. The filter shaker override switch should be in the “on” position for most operations.

Use one of the following methods to clean the dust filter:

- TAP − Tap the filter gently on a flat surface with the dirty side down. Do not damage the edges of the filter element or the filter will not seat properly in the filter frame.
- AIR − Blow compressed air, 240 kPa (35 psi) maximum, through the dust filter opposite the direction of the arrows on the side of the filter. This may be done with the filter in the machine. Always wear eye protection when using compressed air.

FOR SAFETY: When servicing machine, wear eye and ear protection when using pressurized air or water.

REMOVING THE DUST FILTER

FOR SAFETY: Before leaving or servicing machine; stop on level surface, set parking brake, and turn off machine.

1. Loosen the six front filter cover screws and remove the front filter cover.
2. Remove the filter hold-down plate. Remove the dust filter.

3. Inspect and clean or replace the dust filter.

INSTALLING THE DUST FILTER

1. Position the dust filter in the filter frame with the arrows on the side of the filter pointing away from the machine.
2. Position the filter hold-down plate on the filter.
3. Secure the front filter cover on the filter frame with the six front filter cover screws.

SKIRTS AND SEALS

HOPPER LIP SKIRT

The hopper lip skirt is located on the lower rear of the hopper. The hopper lip skirt should be inspected for wear or damage daily.

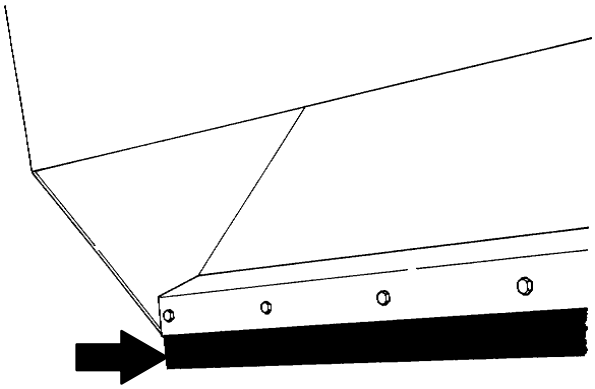

02348

REAR BRUSH SKIRTS

The rear brush skirts are located on the bottom rear of the brush compartment. The rear brush skirts should clear the floor by 2 mm (0.06 in). Inspect the skirt for wear or damage and proper floor clearance daily.

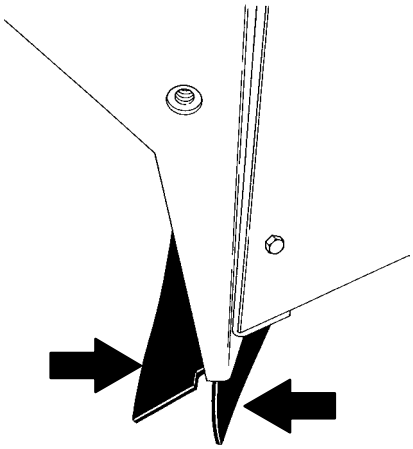

03157

HOPPER TOP SEAL

The hopper top seal is located on the front edge of the machine frame. Inspect the seal for wear or damage daily.

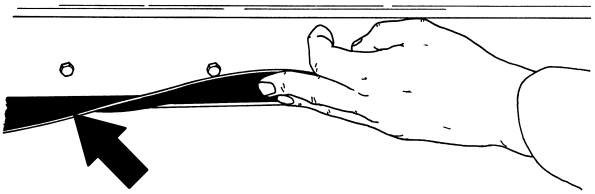

02349

MAIN BRUSH SKIRTS AND SEALS

The right side seal (not shown) is mounted to the machine frame. The left side seal is mounted to the main brush access door. The main brush door seal is mounted to the door. Inspect the seals for damage and wear daily. The main brush skirts should clear the floor by 2 mm (0.06 in). Inspect the skirts for damage and wear and proper floor clearance daily.

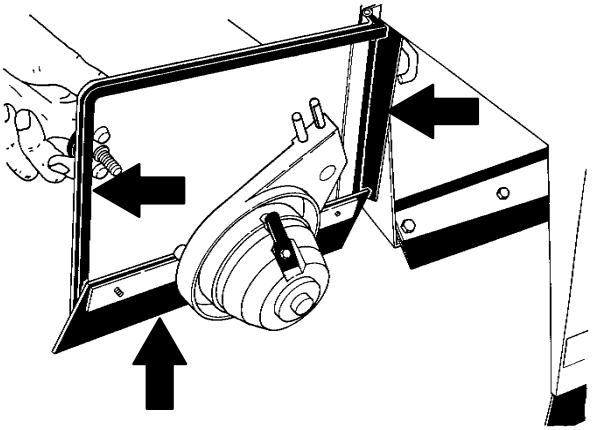

02347

PROPEL HANDLE ASSEMBLY

ADJUST PROPEL HANDLE ASSEMBLY HEIGHT

The propel handle assembly height is adjustable.

FOR SAFETY: Before leaving or servicing machine; stop on level surface, set parking brake, and turn off machine.

1. Remove the battery compartment covers and the rear cover. Set the covers and hardware aside.

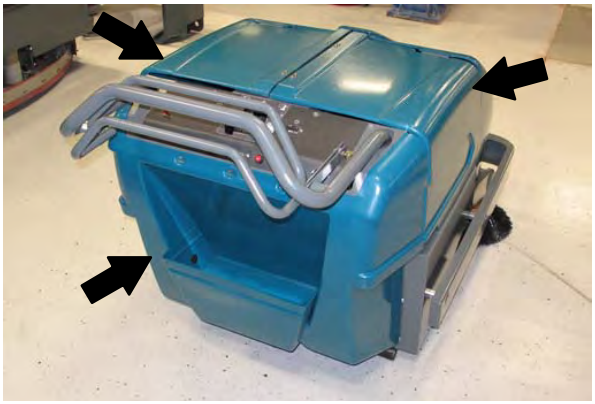

2. Slide the sleeve of the ball joint down and disconnect the ball joint from the propel handle assembly.

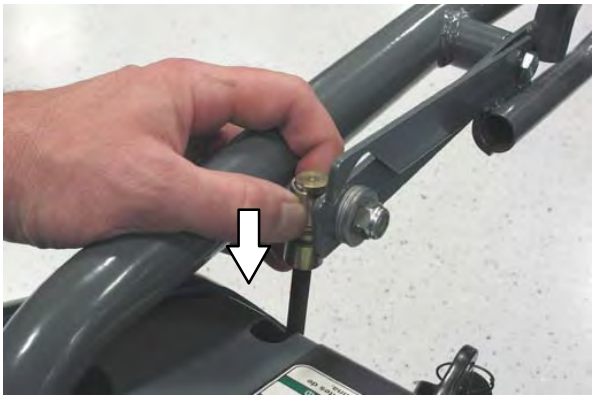

3. Remove the hardware holding the propel handle assembly to the frame of the machine. Set the hardware aside.

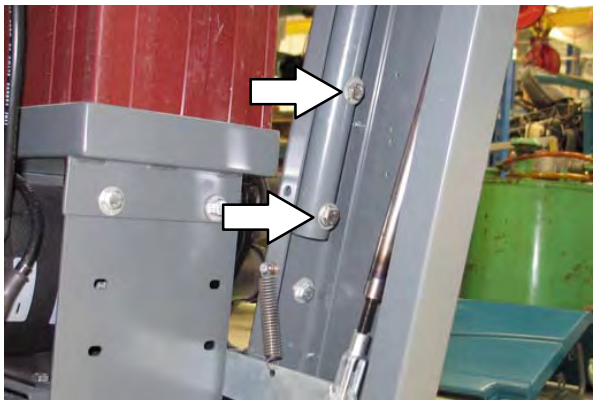

4. Raise or lower the propel handle assembly to the desired height.

5. Align the holes in the propel handle assembly with the holes in the frame of the machine and reinstall the hardware to secure the handles into place.

6. Loosen the lock nut and turn the ball joint until the propel rod assembly is at the correct length to be reinstalled onto the propel handle assembly. Tighten the lock nut.

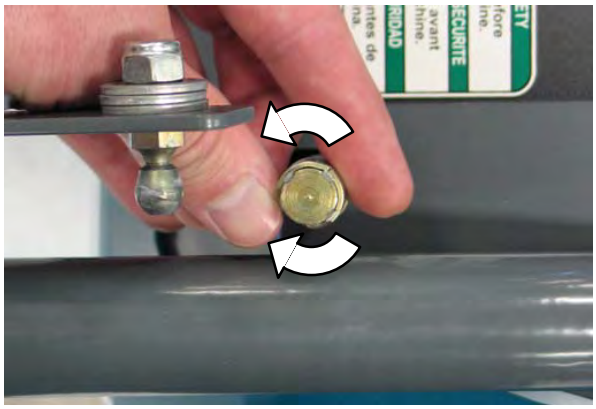

7. Reattach the ball joint to the propel handle assembly.

8. Start and test the machine. Squeeze both propel handles to ensure the machine moves in both directions.

9. Reinstall the rear cover and battery compartment covers.

TRANSPORTING AND STORING THE MACHINE

TRANSPORTING THE MACHINE

1. Position the front of the machine at the loading edge of the truck or trailer.

   FOR SAFETY: Use Truck Or Trailer That Will Support The Weight Of The Machine.

NOTE: Empty the hopper before transporting the machine.

2. Block the machine tires. Tie down the machine to the truck or trailer before transporting.

3. Secure the front of the machine by routing straps through the tie down holes and fastening it to the truck or trailer.

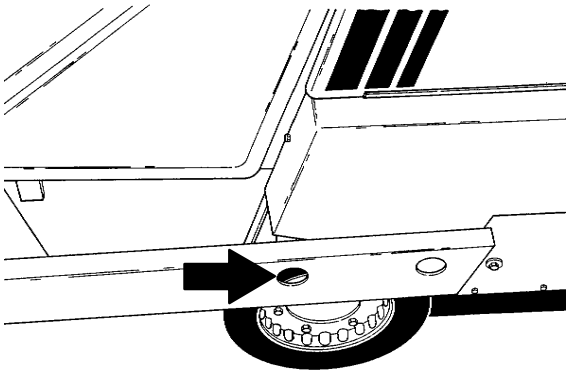

03136

4. Secure the rear of the machine by wrapping straps around the stationary handle and fastening them to the truck or trailer.

STORING MACHINE

When storing the machine for extended periods of time, the following procedures must be followed to lessen the chance of rust, sludge, or other undesirable deposits from forming.

1. Empty debris hopper.

2. Raise the main brush and side brush.

3. Charge the batteries before storing machine to prolong the life of the batteries. Recharge the batteries every 3 months.

WARNING: Fire Or Explosion Hazard. Batteries emit hydrogen gas. Keep sparks and open flame away. Keep battery compartment open when charging.

4. Park the machine in a cool, dry area.

ATTENTION: Do not expose machine to rain, store indoors.

SPECIFICATIONS

GENERAL MACHINE DIMENSIONS/CAPACITIES

Item	Dimension/capacity
Length	1570 mm (62 in)
Height (maximum)	990 mm−1120 mm (39 in−44 in)
Width (with out side brush)	925 mm (36.25 in)
Track−front	790 mm (31 in)
Wheel base	595 mm (23.5 in)
Main brush width	660 mm (26 in)
Main brush diameter	255 mm (10 in)
Side brush diameter	430 mm (17 in)
Sweeping path width (with side brush)	860 mm (34 in)
Hopper volume capacity	0.08 m^3 (2.8 cu ft)
Hopper weight capacity	68 kg (150 lb)
GVWR	345 kg (760 lb)
Dust filter (pleated panel filter element)	4.55 m^2 (49 sq. ft)
Operating sound level at operator ear	76 dB(A)
Vibration level at propel control handles	2.5 m/s^2

GENERAL MACHINE PERFORMANCE

Item	Measure
Turning radius	1730 mm (68 in)
Travel speed forward (maximum)	4.7 Km/h (2.9 mph)
Travel speed reverse (maximum)	4.5 Km/h (2.8 mph)
Maximum rated climb angle	8°/14%
Maximum rated descent angle	6°/10.5%

POWER TYPE

System	Drive Type
Propelling	Belt to chain
Differential	Belt
Wheel Drive	Chain
Main Brush	Belt
Side Brush	Belt
Vacuum Fan	Belt

Type	VDC	amp	Hz	Phase	VAC
Charger: Auto / Selectable AC Voltage Input	24	11	50/60	1	100−240

Type	Use	VDC	kW (hp)
Electric Motor	Propelling	24	0.75 (1)

Type	Quantity	Volts	Ah Rating	Weight
Batteries	2	12	155 @ 20 hr rate	38 kg (83 lb)

TIRES

Location	Type	Size
Front (2)	Solid	250 mm x 51 mm (10 in x 2 in)
Rear (1)	Solid	130 mm x 38 mm (5 in x 1.5 in)

MACHINE DIMENSIONS

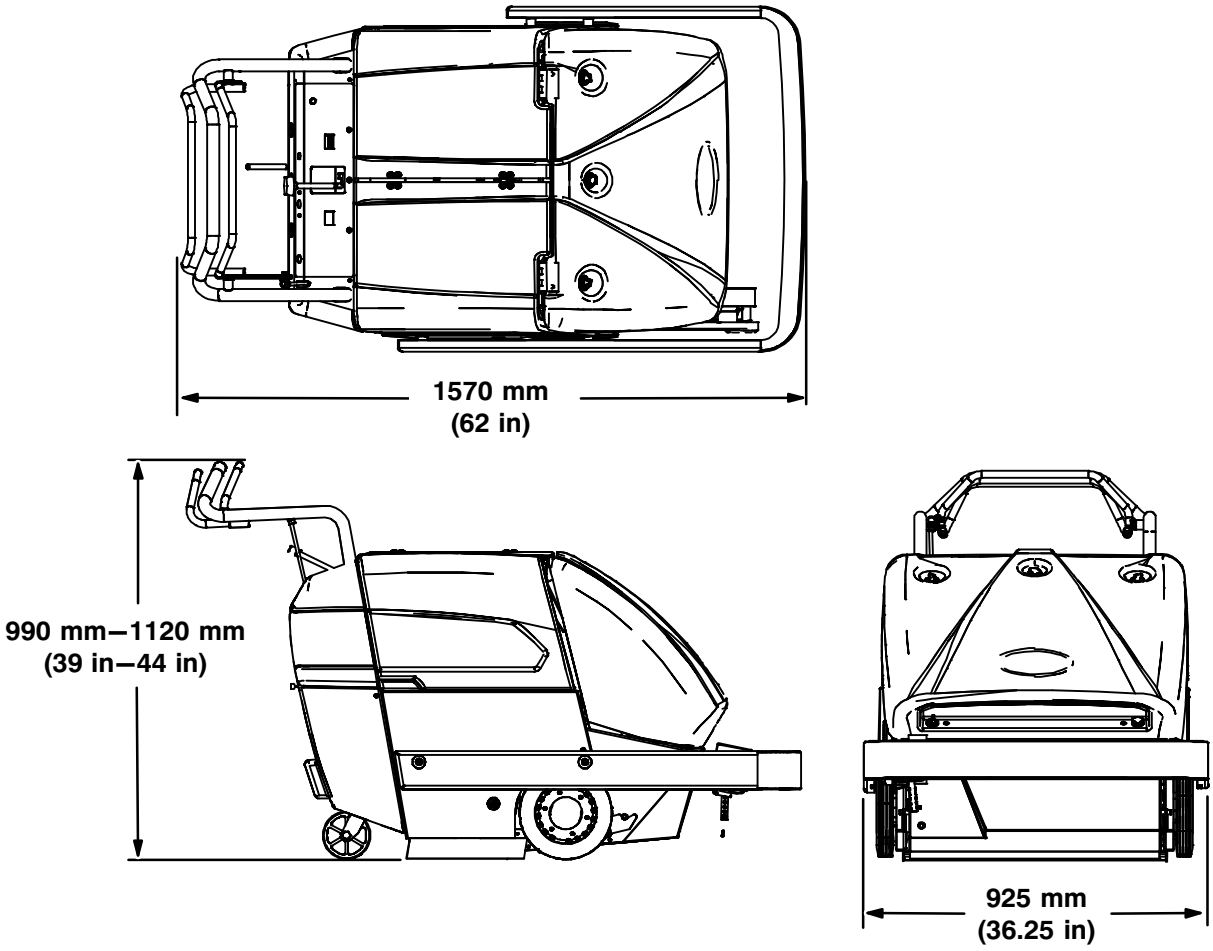

03131

A

Adjusting the dust filter to hopper sealing, 29

Adjusting the hopper floor clearance, 29

Adjusting the main brush pattern, 27

Adjusting the propel handle assembly, 32

Adjusting the propelling belt tension , 23

Adjusting the side brush, 28

Adjusting the side brush belt tension , 24

Adjusting the vacuum fan belt tension , 25

Arm, side brush, 10

B

Batteries, 20
- Charging the batteries, 21
- Checking connections / cleaning, 20
- Checking the electrolyte level, 20
- Maintenance, 20

Battery charge indicator, 8

Battery charger panel, 8

Belts, 23
- Main brush belt, 25
- Propelling belts, 23
- Side brush belt, 24
- Vacuum fan belt, 25

Brakes, parking, 10

Brush arm pivots, 18

Brush Information, 11

Brushes, 26
- Main brush, 26 − 31
- Side brush, 28 − 33

C

Capacities, 34

Chain, static drag, 26

Chains
- Static drag chain, 26
- Wheel drive chains, 26

Checking and adjusting the hopper floor clearance, 29

Checking and adjusting the main brush pattern, 27

Checking and adjusting the propelling belt tension , 23

Checking and adjusting the side brush belt tension , 24

Checking and adjusting the vacuum fan belt tension, 25

Checking the main brush belts , 25

Checking the wheel drive chain tension , 26

Circuit breakers, 11

Circuit breakers and fuses, 11

Cleaning the dust filter, 30

Control handles, propel, 7

Controls
- Filter shaker override switch, 7
- Main brush lever, 9
- On−off key switch, 12
- Parking brake lever, 10
- Propel control handles, 7
- Side brush arm, 10

Controls and Instruments, 6

D

Debris hopper, 29
- Adjusting the dust filter to hopper sealing, 29
- Checking and adjusting the hopper floor clearance, 29

Debris hopper and dust filter, 29

Differential, 18

Dimensions, 34

Drive chains, 18

Dust filter, 30
- Cleaning the dust filter, 30
- Installing the dust filter, 30
- Removing the dust filter, 30

E

Electric Motors, 23

Electrical system
- Batteries, 20
  - Checking connections / cleaning, 20
  - Checking the electrolyte level, 20
- Charging the batteries, 21

Emptying the hopper, 13

F

Filter shaker override switch, 7

Fuses, 11

H

Hopper lip skirt, 31

Hopper top seal, 31

Hour meter, 9

I

Indicator, battery control, 8

Indicators
- Battery control indicator, 8
- Hour meter, 9

Inspect the debris hopper, 29

Inspect the dust filter, 30

Inspect the main brush, 26

Inspect the side brush, 28

Installing the dust filter, 30

Installing the main brush, 26

Installing the side brush, 28

K

Key switch, on−off, 12

L

Labels, 3, 5 − 7
- Control symbols, 5 − 7
- Safety labels, 3

Lever, main brush, 9

Lever, parking brake, 10

Lubrication, 18
- Brush arm pivots, 18
- Differential, 18
- Drive chains, 18
- Rear caster, 18
- Self adjusting sheave, 19
- Side brush gear box, 19

M

Machine components, 4

Machine dimensions, 35

Machine Operation, 12
- Emptying the hopper, 13
- Pre−Operation Checklist, 12
- Removing the hopper, 14
- Sweeping, 12

Machine Performance
- Travel Speed (Maximum), 34
- Turning radius, 34

Machine Specifications, 34 − 37

Machine Troubleshooting, 15

Main brush, 26
- Checking and adjusting the main brush pattern, 27
- Installing the main brush, 26
- Removing the main brush, 26

Main brush belt, Checking the main brush belts , 25

Main brush down position, 9

Main brush free−float position, 9

Main brush lever, 9

Main brush positions
- Main brush down position, 9
- Main brush free−float position, 9
- Main brush up position, 9

Main brush skirts and seals, 31

Main brush up position, 9

Maintenance, 16 − 40
- Batteries, 20
  - Checking connections / cleaning, 20
  - Checking the electrolyte level, 20
- Belts and Chains, 23
- Brushes, 26
- Debris hopper and dust filter, 29
- Electric motors, 23
- Lubrication, 18
- Skirts and seals, 31

Maintenance Chart, 16

Meter, hour, 9

Motors, Electric motors, 23

O

On−off key switch, 12

Operating the machine
- Emptying the hopper, 13
- Removing the hopper, 14
- Sweeping, 12

Operation, 4 − 28

Operation of controls, 7

Options, Parking brake lever, 10

P

Parking brake lever (Option), 10

Power type, Specifications, 34

Pre−Operation Checklist, 12

Propel control handles, 7

Propel handle assembly, 32
  Adjusting the propel handle assembly, 32

Propelling belts, 23
  Checking and adjusting the propelling belt tension , 23

R

Rear brush skirts, 31

Rear caster, 18

Removing the dust filter, 30

Removing the hopper, 14

Removing the main brush, 26

Removing the side brush, 28

S

Safety
  Labels, 3
  Precautions, 2

Self adjusting sheave, 19

Side brush, 28
  Adjusting the side brush, 28
  Installing the side brush, 28
  Removing the side brush, 28

Side brush arm, 10

Side brush belt, Checking and adjusting the side brush belt tension , 24

Side brush gear box, 19

Skirts and Seals, 31
  Hopper lip skirt, 31
  Hopper top seal, 31
  Main brush skirts and seals, 31
  Rear brush skirts, 31

Specifications, 34 − 37
  Machine Capacities, 34
  Machine Dimensions, 34
  Machine Performance, 34
  Power type, 34
  Tires, 35

Static drag chain, 26

Storing the machine, 33

Sweeping, 12

Symbol definitions, 5 − 7

T

Thermo−Sentry, 30

Tires, Specifications, 35

Transporting and Storing the Machine, 33

Transporting the machine, 33

Troubleshooting, 15

Turn machine off, 13

Turn machine on, 12

V

Vacuum fan belt, Checking and adjusting the vacuum fan belt tension , 25

W

Wheel drive chains, Checking the wheel drive chain tension , 26